Table of Contents

Title 55
PUBLIC SAFETY
Part I. State Police

Chapter 1. Criminal Records Unit 1
§101. Charging and Collecting of Fee for Processing of Finger Print Cards 1
Chapter 2. Criminal History Background Checks on Licensed Ambulance Personnel and Nonlicensed Persons 1
§201. Statement of Department Policy 1
§203. Definitions 1
§205. Application to be Approved as an Authorized Agency 1
§207. Request for Criminal History Information 2
§209. Receipt and Use of Criminal History Information 2
Chapter 3. Training and Education 2
§301. User Fees for Louisiana State Police Facility 2
Chapter 4. Right to Review 3
Subchapter A. Right to Review Procedures 3
§401. Right to Review Procedures 3
Chapter 5. Breath and Blood Alcohol Analysis Methods and Techniques 3
Subchapter A. Analysis of Breath 3
§501. Approval of Instruments to Conduct Blood Alcohol Analysis by Breath Sampling 3
§503. Operator Qualifications 4
§505. Instructor Qualification 5
§507. Qualification of Individuals for Instrument Maintenance and Inspection 5
§509. Permits 6
§511. Recording Analysis and Recertification Date 6
§513. Procedure for Analysis Using the Intoxilyzer 5000 6
§514. Procedure for Analysis Using the Intoxilyzer 9000 7
§515. Maintenance Inspection for the Intoxilyzer 5000 7
§516. Maintenance Inspection for the Intoxilyzer 9000 7
Subchapter B. Analysis of Blood 8
§551. Definition 8
§553. Certification; Renewal of Certification; Suspension, Revocation or Cancellation 8
§555. Certified Techniques of Analyst 8
§557. Maintenance, Repair and Inspection 9
§559. Certification Testing 10
§561. Quality of Glassware and Supplies 10
§563. Proficiency Testing 10
§565. Certified Personnel 10
Subchapter C. Analysis of Blood and Urine for Controlled Dangerous Substances 11
§571. Definitions 11
§573. Qualifications of Forensic Laboratories 11
§575. Operating Procedures 11
§577. Personnel 11
§579. Certification 11
§581. Receiving and Sampling of Evidence 12
§583. Analytical Procedures 12
§585. Review of Data 13

§587. Quality Assurance 13
§589. Maintenance, Repair and Inspection 13
§591. Reagents and Supplies 13
Chapter 6. Ignition Interlock Devices 13
§601. Introduction 13
§603. Definitions 14
§605. Manufacturers 14
§607. Regulation of Manufacturers 15
§609. Manufacturer's File on Driver 15
§611. Driver's License and Proof of Insurance 15
§613. Ignition Interlock Standards 15
§615. Installation and Inspection 16
§617. Notice of Probation Revocation 17
Chapter 7. Environmental Emergency Response Training Program 17
§701. Authority 17
§703. Definitions 17
§705. Staff and Organization 17
§707. Eligibility 18
§709. Curriculum 18
§711. Administration 18
Chapter 8. Accident Reports 18
§801. Costs of Accident Reports 18
§802. Third Party Convenience Fee 18
Chapter 9. Photographs 19
§901. Costs of Photographs Pertaining to Accident Reports 19
Chapter 11. State Police Escort Fees 19
§1101. Distance/Fees 19
Chapter 13. Issuance of Concealed Handgun Permits 19
§1301. Applications and Permits 19
§1303. Issuance of Special Officer's Commission 20
§1305. Definitions 20
§1307. Applications and Permits 21
§1309. Permits 23
§1311. Handgun Training Requirements 23
§1313. Code of Conduct of Permittees 25
§1315. Appeal and Hearing Procedures 26
§1317. Severability Clause 27
Chapter 15. Explosives Code 27
Subchapter A. General 27
§1501. Scope of Rules and Regulations 27
§1503. Definitions 27
§1505. General Administrative Requirements 29
§1507. Blasting Agents 30
§1509. General Storage Requirements 31
§1511. Magazine Construction Requirements 32
§1513. Storage within Magazines 33
§1515. Storage of Blasting Agents 34
§1517. Storage Inventory 35
§1519. Shortages or Thefts 35
§1521. General Transportation Requirements 35

§1523. Transportation Safety Requirements 35
§1525. Operation of Vehicles 35
§1527. Transportation of Explosives at Piers, Railway Stations, etc. 36
§1529. Transportation of Blasting Agents 36
§1531. General Requirements 36
§1533. Loading of Explosives in Blast Holes 37
§1535. Initiation of Explosive Charges 37
§1537. Identification Numbers and Symbols 38
§1539. Investigative Reports 38
§1541. Training 38
§1543. Drug Testing Requirements 40
Subchapter B. Appendices 41
§1545. Appendix A—Table 1, American Table of Distances for Storage of Explosive Materials 41
Explanatory Notes Essential to the Application of the American Table of Distances for Storage of Explosive Materials 42
§1547. Appendix B—Table 2, Table of Recommended Separation Distances of Ammonium Nitrate and Blasting Agents from Explosives or Blasting Agents 43
§1549. Appendix C—Table 3, Storage in Magazines and Classification and Use of Magazines 45
Chapter 19. Towing, Recovery, and Storage 46
Subchapter A. Authority, Exemptions, Definitions, Scope 46
§1901. Authority 46
§1903. Exemptions 46
§1905. Definitions 46
§1907. Administrative Penalty Assessment; Arbitration; Recovery of Penalties 47
§1909. Relationship to Other Laws and Regulations 48
§1911. Code of Conduct 49
Subchapter B. Tow Truck License Plate; Required Insurance 50
§1913. Tow Truck License Plate 50
§1915. Insurance Requirements; Financial Responsibility 51
Subchapter C. Safety 52
§1917. Driver's License; Required Skills and Knowledge 52
§1919. Tow Truck Lighting; Equipment 52
§1921. Required Equipment 53
§1923. Capacities and Specifications of Tow Equipment 53
§1925. Tow Truck Load Limitations; Specifications 54
§1927. Inspections by the Department 54
§1929. Towing Services to Use Due Care 55
§1930. Vehicles Towed from Private Property 55
Subchapter D. Vehicle Storage 55
§1931. Storage Facility; Licensing, Fees, Inspection, Requirements 55
§1933. Requirements for Official Report of Stored Vehicle (ORSV); Filing; Submittal; Option of the Department to Send and Receive ORSV Information 56
§1935. Owner Notification of a Stored Vehicle 57
§1937. Administrative Fees 57
§1939. Permits to Sell and Permits to Dismantle 57
§1941. Storage and Towing Facilities; General Requirements; Procedures 58
§1943. Storage Rates 59
§1945. Gate Fees 59

Subchapter E. Rotation List 60
§1947. Law Enforcement Tow Truck Rotation List 60
§1949. Severability Clause 65
Chapter 21. Underground Utilities 65
§2101. Purpose 65
§2103. Definitions 65
§2105. Regional Notification Certification Process 66
§2106. Investigation Procedure 67
§2107. Citation 67
§2109. Collection of Data by the Department 67
§2111. Establishment of Local Governmental Enforcement 68
§2113. Civil Penalties 68
§2115. Report of Adjudication 68
§2117. Collection and Distribution of Fees, Fines, or Civil Penalties: Underground Damages Prevention Fund 69
Chapter 23. Weights and Standards 69
§2301. Weights and Standards Mobile Police Force 69
§2303 Definitions 69
§2305. Width 71
§2307. Length 71
§2309. State Police Escorts 72
§2311. Care of Vehicle Load 72
§2313. Farm Vehicles and Equipment 72
§2315. Weight Limitations 72
§2317. Special Permits 73
§2319. Assessment of Civil Penalties 73
§2321. Recovery of Civil Penalties 73
§2323. Approval of Safety Devices 74
Chapter 25. Litter Enforcement 74
§2501. Approved Citation for Litter Enforcement 74
Chapter 27. Collection, Submission, Receipt, Identification, Storage and Disposal of DNA Samples 74
Subchapter A. Collection of DNA Samples 74
§2701. Scope, Purpose and Application 74
§2702. Definitions 75
§2703. Collection, Submission, and Identification of DNA Samples for Convicted Offenders 75
§2704. Shipping of DNA Samples for Convicted Offenders 76
§2705. Record Keeping of DNA Samples for Convicted Offenders 76
§2706. Storage of DNA Samples for Convicted Offenders 76
§2707. Severability 76
Subchapter B. Arrestees 76
§2720. Scope, Purpose and Application 76
§2721. Definitions 76
§2722. Collection, Submission, and Identification of DNA Samples for Arrestees 77
§2723. Security of Biological Samples at Booking Facility 77
§2724. Shipping of DNA Samples for Arrestees 77
§2725. Record Keeping of DNA Samples for Arrestees 78
§2726. Storage of DNA Samples for Arrestees 78
§2727. Severability 78

Subchapter C. Peace Officers 78
§2740. Scope, Purpose and Application 78
§2741. Definitions 78
§2742. Collection of DNA Samples for Peace Officers 78
§2743. Storage of Biological Samples 79
§2745. Disposition of Biological Samples Following Termination Peace Officer Employment 79
§2747. Severability 79
Chapter 29. Defensive Driving Course Approval and Certification 79
§2901. Defensive Driving Course Approval Process 79
Chapter 31. Motorcycle Safety Training Program 82
§3101. Purpose 82
§3103. Background 82
§3105. Legal Authority 82
§3107. Definition of Program Terms 82
§3109. Motorcycle Safety Instructor Status 83
§3111. Application for Department Motorcycle Safety Instructor Status 84
§3113. Recognition and Maintenance of Motorcycle Safety Instructor Status 84
§3115. Revocation of Motorcycle Safety Instructor Status 84
§3117. Motorcycle Operator Training Course Standards 85
§3119. Approval to Establish and Conduct a Department Motorcycle Operator Training Course 85
§3121. Motorcycle Operator Training Course Enrollment and Participation Policies 86
§3123. Wage Policy 87
§3125. Motorcycle Operator Training 88
§3127. Program Insurance and Reporting Accidents 89
§3129. First Aid 90
§3131. Program Materials and Equipment 90
§3133. Student Completion Certificates 91
§3135. Program Form Duplication and Availability Policy 91
§3137. Public Information Policy 91
Chapter 33. Rulemaking Petitions 91
§3301. Submission of a Rulemaking Petition 91
§3303. Consideration of a Rulemaking Petition 92

Part III. Motor Vehicles

Chapter 1. Driver's License 93
Subchapter A. General Requirements 93
§100. Definitions 93
§101. General Knowledge Required of All Applicants for a Commercial Driver's License 93
§103. Examinations and Skills Tests 95
§107. Knowledge and Skills Test for Endorsements to a Commercial Driver's License 96
§108. Designations or Restrictions on Driver’s Licenses and Identification Cards 98
§109. Color of License 98
§110. U.S. Veterans Driver's License 99
§111. Change of Name or Sex 99
§113. Administrative Hearing Requests for Suspensions and Disqualifications Arising from Tests for Suspected Drunken Drivers 99
§114. Suspension or Denial of Driving Privileges for Failure to Pay Child Support 100
§115. Intoxicating Beverages and Controlled Substances 100
§117. Third-Party Testers 101
§118. Administrative Actions 102

§119. Third-Party Examiners 102
§121. State Examiners 103
§123. Enforcement 103
§125. Basic Maneuvers 103
§127. Retesting Fees 104
§129. Renewal by Mail 104
§131. Disqualifications for Mail Renewal Applicants 104
§133. Further Disqualifications 105
§135. Renewal by Electronic Commerce 105
§137. Renewal Stickers 105
§143. Commercial Driving Schools 105
§144. Driver Education and Driving Schools 107
§145. Qualifications for Private Driving School Owners and Instructors 107
§146. Application Process and Fees for Private Driving Schools and Instructors 109
§147. General Regulations for Private Driving Schools 112
§148. Secondary/Alternative School Driver Education Program 113
§149. Application Process and Fees for Secondary/Alternative Schools and Instructors 114
§150. Regulations and Policies for Secondary and Alternative School Driver Education Courses 115
§151. Regulations for All Driver Education Providers 115
§152. School Policies and Course Specifications 121
§153. Parental Orientation [Formerly §154] 121
§154. Driver Education Curriculum 122
§155. Third-Party Tester/Examiner Requirements 128
§156. Application Process and Fees for Third-Party Testers/Examiners 128
§157. General Regulations for Third-Party Testers 129
§158. Military Exemption [Formerly §159] 132
§159. Suspension, Revocation and Penalty Assessment 132
§161. Digitized Driver’s License or Special ID Card 132
Subchapter B. Reciprocity Agreements with Foreign Countries 133
§171. General 133
§173. Application for a Driver's License Pursuant to a Reciprocity Agreement; Graduated Driver's License; Reports of Driver Condition or Behavior 133
§175. Revocations, Suspensions; Compact State 134
§177. Effective Dates of Reciprocity Agreements; Policy and Procedure Statements 134
§179. Commercial Driver's Licenses; Class of License 134
§181. Declaratory Orders 134
Subchapter C. Third-Party Knowledge and Skills Testing for Class "D" and "E" 135
§185. Eligibility, Application, Contract 135
§187. Compliance 135
Chapter 2. Administrative Procedure 136
§201. Suspension, Revocation or Cancellation of License, Administrative Hearings 136
Chapter 3. License Plates and Removal of Plates, Registrations, and Title Transactions 139
Subchapter A. Types of License Plates and Removal of Plates 139
§300. Issuance of Plates 139
§301. Shriner Plates 139
§303. Public Service Commission Plates 140
§305. Plates for Members of Congress 140
§307. National Guard Plates 141
§309. Prestige License Plates 141

§311. Ex-Prisoners of War License Plates 142
§313. Disabled Veterans' License Plates 142
§315. Antique License Plates 143
§317. Citizens Band (CB) Radio Operator's License Plates 143
§319. Consuls' License Plates 144
§321. Amateur Radio Operators' License Plates 144
§323. U.S. Veterans License Plate 145
§325. International Registration Plan 145
§327. Apportioned Plates 145
§329. Removal of License Plate When Owner/Operator Is Suspended 146
§331. Dealer Plates 146
§333. Louisiana Educator License Plate 147
§335. Retired Law Officer License Plate 147
§337. Military Surplus Motor Vehicles 147
Subchapter B. Vehicle Registration License Tax 148
§351. Definitions 148
§353. Valuation of Vehicles under the Vehicle Registration License Tax Registered on or after January 1, 1990 148
§355. Valuation of Motor Vehicles for Purposes of Initial and Subsequent Registration on or after January 1, 1990 148
§357. Assessment of the Vehicle Registration License Tax 149
§359. Declaratory Orders and Rulings 149
§361. Administrative Actions 150
§363. Payment under Protest 150
§365. Valuation of Motor Vehicles Awarded Pursuant to a Judgment of a Court of Limited Jurisdiction 150
§367. Driver Privacy Protection Act 151
§381. Definitions 151
§383. Exemption from Sales Tax 152
§385. Exemption Certificate 152
§387. Business Location in Louisiana 152
§391. Administrative Actions 152
§393. Declaratory Orders 153
Subchapter D. Title Transactions 153
§395. Donations by Manual Gift at a Louisiana Motor Vehicle Commission Licensed Dealer 153
§397. Water Damaged Vehicles 154
Chapter 4. Specifications for Electronic Reporting Of Interlock Device Installation/Removal 154
§401. Introduction 154
§403. Definitions 154
§405. Record Formats 154
§407. Data Requirements 155
§409. Record Descriptions 155
§411. Interlock Filing Record 155
§413. Reporting Instructions 156
§415. Error Messages 156
§417. Contact Information 157
Subchapter B. Credit for Suspension Time or Condition of Reinstatement Time for Installation of an Ignition Interlock Device 157
§451. Requirements to Receive Credit toward Suspension Time or Condition of Reinstatement Time 157

§453. No Credit toward Suspension Time if Subsequently Charged or Arrested 157
§455. Credit Time (Prospective only from August 1, 2019) 158
§457. CDL Disqualifications 158
Chapter 5. Records 158
Subchapter A. Fees 158
§501. Motor Vehicle and Drivers License Records 158
Subchapter B. Privacy 159
§551. Statement of Intent and Purpose 159
§553. Definitions 159
§555. Prohibition on Disclosure and Use of Personal Information from Department Records 160
§557. Procedure for Requesting Personal Information 160
§559. Administrative Actions 161
§561. Contracts 161
§563. Representations Regarding Records and Personal Information 163
§565. Official Use of Personal Information 163
Chapter 6. Rulemaking Petitions 163
§601. Submission of a Rulemaking Petition 163
§603. Consideration of a Rulemaking Petition 163
Chapter 7. Louisiana Motor Vehicle Safety Inspection Program 164
§701. Foreword (Formerly §803) 164
Chapter 8. Motor Vehicle Inspection 164
Subchapter A. General 164
§801. Definitions 164
§803. Penalties for Non-Compliance (Formerly §701) 164
Subchapter B. Safety Inspections 165
§805. Requirements 165
§807. Operation as an Official Motor Vehicle Inspection Station 170
§809. General Inspection Requirements 173
§811. Inspection Procedures 174
§813. Required Equipment 176
§815. Miscellaneous Inspection Procedures 182
Subchapter C. Vehicle Emission Inspection and Maintenance Program 183
§817. General Information 183
§819. Anti-Tampering and Inspection and Maintenance Parameters 184
Subchapter D. Inspection Procedures for School Buses 184
§821. General Information 184
§823. General Inspection Procedures for School Busses (must comply with requirements of LAC 55:III.811 where applicable) 185
Subchapter E. Federal Motor Carrier Safety Regulations for Commercial Motor Vehicles (CMV) 189
§825. General Information 189
§827. 49 *Code of Federal Regulations* (CFR) §390.15 Motor Carrier Safety Regulations 189
§829. Minimum Periodic Inspection Standards 190
§831. Additional Requirements 196
Subchapter F. Administrative and Audit Procedures 196
§833. Investigations; Administrative Actions; Sanctions 196
§835. Declaratory Orders and Rulings 196
Chapter 11. Vehicle Safety Equipment 197
Subchapter A. Motorcycle Helmets 197
§1101. Scope, Purpose and Application 197
§1102. Definitions 197

§1103. Requirements 197
§1104. Impact Attenuation 197
§1105. Penetration 197
§1106. Retention System 197
§1107. Configuration 198
§1108. Projections 198
§1109. Labeling 198
§1110. Helmet Positioning Index 198
§1111. Preliminary Test Procedures 198
§1112. Selection of Appropriate Headform 198
§1113. Reference Marking 199
§1114. Helmet Positioning 199
§1115. Conditioning 199
§1116. Test Conditions 199
§1117. Penetration Test 200
§1118. Retention System Test 201
Subchapter B. Motorcycle Goggles and Safety Glasses 201
§1119. Purposes and Scope 201
§1120. Definitions 201
§1121. Eye Protection Devices 201
§1122. Materials 202
§1123. Optical Properties of Eye Protection Devices 202
§1124. Light Transmittance of Eye Protection Devices 203
§1125. Lens Strength-Testing Procedure for Eye Protection Devices 203
§1126. Flammability Test—Plastics Only 203
§1127. Care and Cleansing 204
§1128. Identificationand Labeling Eye Protection Devices 204
§1131. Appendices 204
Chapter 13. Vehicle Certificates 217
Subchapter A. Certificates of Title 217
§1301. Name Usage on Vehicle Certificates of Title 217
Subchapter B. Salvaged, Junked or Total Loss Vehicle Certificates of Title 217
§1331. Definition 217
§1333. Issuance 217
§1335. Procedures 217
§1337. Procedures to Follow When a Junked Vehicle Is Sold to Another Party 218
§1339. Certificate of Salvage Form Instructions 218
Chapter 15. Services Provided by Persons and Business Entities 218
Subchapter A. Auto Title Companies 218
§1501. Definitions 218
§1503. Requirement of License 218
§1505. Application Requirements 218
§1507. Application Fee 219
§1509. Renewal Application 219
§1511. Change of Location or Information 219
§1513. Change of Ownership 219
§1515. Inspections and Audits 219
§1517. License Suspension, Revocation, Cancellation, Nonissuance, or Restrictions 220
§1519. Declaratory Orders and Rulings 220
§1521. Insufficient Funds Checks 220

§1523. Administrative Hearings 221
§1525. Third Party Checks Prohibited 221
§1527. Name, Trade Name, Advertisements, and Other Signage of Auto Title Companies 221
Subchapter B. Public Tag Agents 221
§1551. Definitions 221
§1553. Authority; Businesses and Governmental Entities 221
§1555. Convenience Fee 221
§1557. Administrative Actions 222
§1559. Applications 222
§1561. Eligibility, Suspension, Revocation, or Cancellation of Public Tag Agent's Authority 222
§1563. Name, Trade Name, Advertisements, and Other Signage of Public Tag Agents 223
§1565. Driver Privacy Protection Act 223
§1567. Bond Requirement 223
§1569. Contracts 223
§1571. Declaratory Orders and Rulings 223
§1573. Confidentiality 224
§1575. Driver's License Issuance 224
§1577. Other Transactions 225
Chapter 17. Compulsory Insurance 225
Subchapter A. General 225
§1701. Definitions 225
§1703. Official Notification 225
§1705. Revocation of Registration Privileges 225
§1707. Proof of Insurance 226
§1709. Proof of Insurance for Rental or Leased Motor Vehicles 227
§1711. Transfer of Title of a Vehicle Subject to the Provision of this Chapter 227
§1713. Declaratory Orders and Rulings 227
§1715. Severability 228
§1717. Owner and Driver Compliance 228
Subchapter B. Specifications for Notification of Initiation, Termination, or Modification of Liability Security 228
§1750. Definitions 228
§1752. Introduction 230
§1754. General Information 231
§1756. Reporting Instructions [Formerly §1768] 234
§1757. Declaratory Orders and Rulings [Formerly §1789] 241
§1758. Invalid Vehicle Type-Use [Formerly §1788] 241
§1760. Identification Card Specifications [Formerly §1790] 241
§1762. Proof of Liability Security [Formerly §1792] 243
Subchapter C. Compulsory Insurance Enforcement 244
§1766. Introduction 244
§1767. Book of Business Reporting 245
§1768. Insurance Provider Web Services 247
§1770. Reporting by Smaller Insurance Providers 249
§1772. Registration Process 249
§1774. Support 250
§1776. Appendix A—Sample Verification Request and Response Messages 250
§1778. Appendix B: Unconfirmed Reason Codes 251
§1780. Appendix C: Vehicle Types to be Reported 251

§1782. Appendix D: Error Codes in Row Error Files 251
§1784. Appendix E: Definitions 252
§1786. Model User Guide for Implementing Online Insurance Verification 252
Chapter 19. Special Identification Cards 253
§1901. Definitions 253
§1903. Application for Special Identification Card 253
§1905. Exclusive List of Acceptable Primary and Secondary Documents for Purposes of Identification 253
§1907. Refugees 254
§1909. Documents Which Are Not Acceptable Forms of Identification 255
§1911. Identification Requirements for Foreign Exchange Students 255
§1913. Additional Identification Requirements for Minors 255
§1915. Eligibility 255
§1917. Duplicate Identification Cards 256
§1919. Acceptance of Checks for Identification Cards 256
§1921. Denial, Revocation or Cancellation of Identification Cards 256
§1923. Administrative Hearings 256
§1925. Declaratory Orders and Rulings 256
§1927. Driver Privacy Protection Act 257
§1929. Renewals 257
Chapter 21. Off-Road Vehicles 257
Subchapter A. Utility Terrain Vehicles 257
§2101. Definition 257
§2103. Prohibition Exceptions to Use of Utility Terrain Vehicles on Public Roads or Streets 258
§2105. Requirements for Utility Terrain Vehicles 258
§2107. Registering a Utility Terrain Vehicle 258
§2109. Reclassifying a Qualifying Vehicle as a Utility Terrain Vehicle 259
§2111. Utility Terrain Vehicle Roadway Operation 259
Subchapter B. Golf Carts 259
§2113. Definition 259
§2115. Prohibition Exceptions to Use of Golf Carts on Public Roads or Streets 259
§2117. Requirements 259
§2119. Titling a Golf Cart 260
§2121. Reclassifying Vehicle as a Golf Cart 260
§2123. Golf Cart Roadway Operation 260
Chapter 23. Hang Tags for Mobility Impaired Individuals 260
§2301. Definitions 260
§2303. Application for Hang Tags (Visiting a Field Office) 261
§2305. Proper Display of a Hang Tag 261
§2307. Application for Hang Tags (Applicant is Unable to Visit a Field Office) 261
§2309. Denial, Revocation or Cancellation of Hang Tags or Mobility Impaired Identification Card 261

Part V. Fire Protection

Chapter 1. Preliminary Provisions 263
§101. Petition for Rulemaking 263
§102. Consideration of a Rulemaking Petition 263
§103. General Provisions 263
§105. Required Inspections of Wiring, Gas Piping and Fire Extinguishers 264
§107. Smoke and Fire Detection Systems 265

Chapter 3. Buildings 265
§301. Building Permits 265
§303. Plans and Specifications for New Buildings 265
§305. Insulation 266
§307. Observation of Construction; Final Inspection 266
§309. Requirements for Connection of Electrical Power 267
Chapter 5. Manufactured Housing 267
Subchapter A. General Requirements 267
§501. Definitions 267
§503. Retailer Requirements 269
§505. Inspections 269
§507. Handling of Consumer Complaints 269
§509. Notification and Correction Procedure 270
§511. Oversight by the State Fire Marshal 271
§513. Amendments 271
§515. Appeals 271
§517. IPIA Fees 272
§519. Placement of Used Homes 272
Subchapter B. Manufactured and Modular Housing (Installation) 272
§521. Definitions 272
§523. General 273
§525. License Exceptions 273
§527. Manufactured Housing Installer's License 273
§529. Requirements for Installer's License 273
§531. Installer's Responsibilities and Limits 273
§533. Installer's Responsibilities to the Consumer 274
§535. Monthly Report 274
§537. Issuance and Possession of License 274
§539. License Renewal 274
§543. License Suspension or Revocation; Imposition of Civil Penalties 275
§545. Education: Requirements, Installer's License 275
§547. Course Curriculum Requirements for Education Provider Training 275
§549. Requirements for Education Provider Instructors 276
§551. Inspections by Office of State Fire Marshal 276
§553. Pier Spacing and Construction 277
Subchapter C. Repairs 278
§555. Definitions 278
§557. Repair Requirements 279
Chapter 9. Tents and Tenting Material 279
§901. Definitions 279
§903. Specification Standards 280
§905. Certification 280
§907. Labels 280
Chapter 13. Health Care Facilities; Hospitals 280
§1301. Emergency Generators for Health Care Facilities 280
§1303. Hospital Fire Lanes 280
Chapter 15. Public Places in General 281
§1501. Equal Access for Disabled Individuals 281
§1503. Smoking in Places of Public Assembly Prohibited 281

§1505. Overcrowding 281
§1507. Storage of Flammables in Places of Public Assembly 281
§1509. Shopping Centers Fire Lanes 282
Chapter 17. Detention and Correctional Occupancies 282
§1701. Inspection of Detention and Correctional Occupancies 282
Chapter 19. Fireworks 282
§1901. Fireworks/Public Display 282
§1902. Class C Pyrotechnic Operator Training and Certification Requirements 283
§1903. Licenses 283
§1904. Adoption of NFPA Standard 1123, *Code for Fireworks Display* 283
§1905. Retail Fireworks Sales 283
Chapter 21. Flammable and Combustible Liquids 284
§2101. Unattended Flammable Liquid Dispensing Systems 284
§2103. Specification for Flammable and Combustible Liquid Containers 284
Chapter 23. Boards within the Office of State Fire Marshal 284
§2301. Fire Marshal Board of Review 284
§2303. Fire Marshal Mobile Home Board of Review 285
§2305. Firemen's State Supplemental Pay Board 285
Chapter 25. Amusement Attractions and Rides 285
§2501. Purpose 285
§2503. Administration 285
§2505. Applicability of Rules 286
§2507. Notices of Violations and Penalties; Cease and Desist Orders 286
§2509. Definitions 287
§2511. Registration of Inflatable Amusement Devices, Amusement Attractions, Amusement Rides; Registration Requirements 288
§2513. Certificate of Registration; Registration Plates; Placement; Annual Decals; Replacement Fees 288
§2515. License Required; Firm Applicability; Individual Applicability; Types of Endorsement 288
§2517. Application for Certificates of Licensure 290
§2519. Fees—General Information 290
§2521. Alteration of Certificates and Licenses 290
§2523. Event Tags; Required; Design and Color Significance; Impairment Notification Requirement and Procedure 291
§2525. Certificate of Inspection Form 291
§2527. Prohibited Acts 292
§2529. Enforcement; Investigations 292
§2531. Administrative Actions; Enhanced Fine Amounts; Fine Schedule 292
§2533. Severability 295
§2535. Third-Party Inspectors; Required Certification; Equivalent Certification; Licensed Engineers; Continuing Education Requirements 295
§2537. Limited Third-Party Specialty Inspector Endorsement 296
§2539. Set-Up Inspectors; Minimum Qualification Requirements 296
§2541. Set-Up Inspections; Individual Ride Units 297
§2543. Prohibited Use 297
§2545. Medical and First Aid 297
§2547. Operation of Amusement Rides or Attractions 298
§2549. Maintenance and Inspection Records 298
§2551. Notification Requirement Regarding Modification of Inflatable Amusement Devices, Amusement Attractions, Amusement Rides; Reidentification 298

§2553. Assembly and Disassembly 299
§2555. Brakes and Stops 299
§2557. Internal Combustion Engines 299
§2559. Wire Rope 299
§2561. Hydraulic Systems 299
§2563. Protection against Moving Parts 300
§2565. Electrical Equipment 300
§2567. Temporary Wiring 300
§2569. Grounding 301
§2571. Construction 301
§2573. Means of Access and Egress 301
§2575. Walkways and Ramps 301
§2577. Fire Prevention 301
§2579. Water Flumes, Structural Design 301
§2581. Pumps 302
§2583. Water Quality 302
§2585. Electrical Safety and Lighting 302
§2587. Operation, Water Flumes 302
§2589. Responsibility of Flume Operators 302
§2591. Fixed Operation Location Emergency Procedures 302
§2593. Go-Kart Rules and Regulations 302
Chapter 26. Commercial Building Energy Conservation Code 305
§2601. General Provisions 305
§2602. Definitions 306
§2603. Energy Code Application and Scope 307
§2604. Compliance Procedures for the Energy Code 307
§2605. Amendments to ANSI/ASHRAE/IESNA 90.1 for Louisiana 307
Chapter 27. Industrialized Buildings 307
§2701. Definitions 307
§2703. Administration and State Fire Marshal Authority 309
§2705. Manufacturer Registration 309
§2707. Dealer Registration 310
§2713. Design and Component Review 310
§2715. Modifications or Alterations to Decaled Buildings 312
§2717. Industrialized Buildings Constructed Prior to January 1, 2007 312
§2719. Manufacture and Installation of Life Safety and Property Protection Systems 313
§2721. Manufacturer's Quality Control Manual 313
§2723. Decal Application and Issuance 314
§2725. Transportation and Installation 315
§2729. Removal of Decals, Penalties and Fines Imposed 315
§2735. Inspections; Inspection Reports 315
§2737. Fees 316
Chapter 29. Emergency Elevator Access 317
§2901. Master Elevator Keys 317
§2903. Statewide Access 317
§2905. Requirements for Master Elevator Keys 317
§2907. Access to Master Elevator Keys 318
§2909. Duplication of Elevator Keys Prohibited 318

§2911. Obtaining Elevator Keys 318
§2913. Equivalency for Existing Buildings; Locking Cabinets; Lock Boxes 318
§2915. Administrative Fine; Penalty 319
Chapter 30. Portable Fire Extinguishers, Fire Hoses, Hydrostatic Testing, Fixed Fire Suppression Equipment and/or Systems and Fire Detection and Alarm Equipment and/or Systems Rules 319
§3001. Purpose 319
§3003. Applicability of Rules 319
§3005. Exceptions 319
§3007. Notices by the Fire Marshal 319
§3009. Certificate, License Required 319
§3011. Definitions 320
§3013. Certificates of Registration 322
§3015. Licensure 322
§3017. Alteration of Certificates or Licenses 323
§3019 Application for Certificates of Registration 324
§3021. Qualifying Persons 324
§3023. Application for Licenses 325
§3025. Fees—General Information 325
§3027. Fees—Specific Information 325
§3029. Examinations 326
§3031. Portable Fire Extinguishers/Fire Hoses 327
§3033. Fixed Fire Suppression and Fire Detection and Alarm Systems and Equipment 328
§3035. Hydrostatic Tests 329
§3037. Installation Tags 329
§3039. Service Tags, Yellow Tags, Red Tags, and Stenciling 330
§3041. Prohibited Acts and Equipment 332
§3043. Enforcement 333
§3045. Administrative Actions 334
§3047. Severability 335
§3049. Adopted Standards 335
§3051. National Recognized Testing Laboratory 335
§3053. Equipment and Facilities 336
§3055. Plan Review 338
§3057. Electrical Contractors 338
§3059. Miscellaneous Provisions 338
Chapter 31. Fire Sprinkler Systems and/or Equipment and Fire Hose Rules 340
§3101. Purpose 340
§3103. Applicability of Rules 340
§3105. Exceptions 340
§3107. Notices by the Fire Marshal 340
§3109. Certificate, License Required 340
§3111. Definitions 340
§3113. Certification of Firms 341
§3115. Licensure of Qualifiers and Inspectors 342
§3117. Alteration of Certificates or Licenses 342
§3119. Application for Certification of Firms 343
§3121. Qualifying Persons 343
§3123. Application for Licenses 344
§3125. Fees—General Information 344

§3127. Fees—Specific Information 344
§3129. Initial Certification, Continuing Education 345
§3131. Fire Sprinkler Systems Installations and Inspections 345
§3133. Installation Placards 345
§3135. Service Tags, Yellow Tags, Red Tags, and Stenciling 346
§3137. Prohibited Acts and Equipment 348
§3139. Enforcement 349
§3141. Administrative Actions 349
§3143. Severability 350
§3145. Adopted Standards 350
§3147. National Recognized Testing Laboratory 351
§3149. Equipment and Facilities 351
§3151. Advisory Committee 351
§3153. Plumbing Contractors 352
§3155. Plan Review 352
§3157. Miscellaneous Provisions 352
Chapter 32. Property Protection Licensing 353
§3201. Purpose 353
§3203. Applicability of Rules 353
§3205. Exceptions 353
§3207. Notices by the Fire Marshal 354
§3209. Certificate, License Required 354
§3211. Definitions 354
§3213. Certificates of Registration 357
§3215. Licensure 358
§3217. Alteration of Certificates or Licenses 358
§3219. Application for Certificates of Registration 358
§3221. Qualifying Persons 359
§3223. Application for Licenses 360
§3225. Fees—General Information 360
§3227. Fees—Specific Information 360
§3229. Initial Licensing Training Certification, Continuing Education 361
§3231. Property Protection Systems and Equipment 361
§3233. Smoke Inducing Security Systems 361
§3235. Installation Tags 361
§3237. Certification Tags, Service Tags, Partial Impairment Tags, Impairment Tags (Special Locking Systems and Equipment Only) 361
§3241. Fair and Ethical Business Practices 364
§3243. Prohibited Acts and Equipment 364
§3245. Enforcement 365
§3247. Administrative Actions 365
§3249. Severability 367
§3251. Adopted Standards 367
§3253. National Recognized Testing Laboratory 367
§3255. Equipment and Facilities 367
§3257. Plan Review 368
§3259. Electrical Contractors 369
§3261. Miscellaneous Provisions 369

Chapter 34. Fire-resistant Material Applicators 371
§3401. Purpose 371
§3403. Administration 371
§3405. Applicability of Rules 371
§3407. Exceptions 371
§3409. Notices by the State Fire Marshal 371
§3411. Definitions 371
§3413. Registration Required 372
§3415. Required Training and Certification 372
§3417. Initial Registration; Annual Renewals 372
§3419. Certificate of Registration 373
§3421. Alteration of Certificates of Registration. 373
§3423. Enforcement; Investigations 373
§3425. Administrative Actions 373
§3427. Severability 373
§3429. Miscellaneous Provisions 374
Chapter 40. State Uniform Construction Code 374
§4001. State Uniform Construction Code 374
Chapter 50. Boiler Construction, Maintenance, Inspection and General Use 374
Subchapter A. General Provisions 374
§5001. Preface 374
§5002. Application 374
§5003. Definitions 375
Subchapter B. Administration 377
§5006. Boilers to Comply with Code Requirements 377
§5007. Inspections 378
§5008. Second-Hand Installations to Comply with New Installation Requirements 378
§5009. Application of State Serial Numbers 378
§5010. Examination for an Inspectors Certificate of Competency 378
§5011. Examination Fees 379
§5012. Certificate of Competency and Identification Card 379
§5013. Conflict of Interest 380
§5014. Inspection Reports to be submitted by Inspectors 380
§5015. Insurance Companies to Notify Chief Inspector of New, Canceled or Suspended Insurance on Boilers, Pressure Vessels, or Nuclear Systems 380
§5016. Special Inspectors to Notify Chief Inspector of Unsafe Boilers 380
§5017. Defective Conditions Disclosed at Time of External Inspection 380
Subchapter C. Existing Installations—Power Boilers 380
§5020. Age Limits of Existing Boilers 380
§5021. Maximum Allowable Working Pressure for Standard Boilers 381
§5022. Maximum Allowable Working Pressure for Nonstandard Boilers 381
§5023. Cast-Iron Headers and Mud Drums 381
§5024. Pressure on Cast-Iron Boilers 381
§5025. Safety Valves 381
§5026. Boiler Feeding 382
§5027. Water Level Indicators 383
§5028. Water Columns 383
§5029. Gage Glass Connections 384
§5030. Pressure Gages 384
§5031. Stop Valves 385

§5032. Blow Off Piping 385
§5033. Repairs and Renewals of Boiler Fittings and Appliances 385
§5034. Repairs and Alterations to Boilers and Pressure Vessels 386
§5035. Conditions Not Covered by these Requirements 386
§5036. Standard Boilers 386
§5037. Nonstandard Riveted Boilers 386
§5038. Nonstandard Welded Boilers 386
§5039. Nonstandard Cast Iron Boilers 386
§5040. Potable Water Heaters 386
§5041. Safety Valves 386
§5042. Safety Relief Valve Requirements for Hot Water Heating and Hot Water Supply Boilers 387
§5043. Steam Gages 388
§5044. Pressure or Altitude Gages and Thermometers 388
§5045. Water Gage Glasses 388
§5046. Stop Valves 389
§5047. Feed Water Connections 389
§5048. Water Column and Water Level Control Pipes 389
§5049. Return Pump 389
Subchapter D. Potable Water Heaters (Hot Water Heaters Other than Hot Water Supply Boilers) 390
§5052. Service Restrictions and Exceptions 390
§5053. Safety Relief Valves 390
§5054. Controls 390
§5055. Repairs 391
Subchapter E. General Requirements 391
§5058. Notice of Internal Inspection of Boilers 391
§5059. Preparation for Internal Inspection 391
§5060. Boilers Improperly Prepared for Inspection 391
§5061. Removal of Covering to Permit Inspection 391
§5062. Lap Seam Crack 391
§5063. Pressure Test 392
§5064. Inspection of Power Boilers 392
§5065. Inspection of Heating, Supply and Potable Water Boilers 392
§5066. Changes from Louisiana Boiler Law/Rules and Regulations 392
§5067. Defective Conditions Disclosed at Time of External Inspection 392
§5068. Unsafe Boilers 392
§5069. Condemned Boilers 392
§5070. Owner or User to Notify Chief Inspector of Accident 393
§5071. Automatic Low Water Fuel Cutoff and/or Water Feeding Device 393
§5072. Pressure Reducing Valves 393
§5073. Boiler Blow Off Equipment 393
§5074. Location of Discharge Piping Outlets 393
§5075. Repairs or Alterations 393
§5076. Supports 393
§5077. Boiler Door Latches 394
§5078. Clearance 394
§5079. Ladders and Runways 394
§5080. Exit from Boiler Room 394
§5081. Air and Ventilation Requirements-Combustion Air Supply and Ventilation of Boiler Room 394
§5082. Gas Burners 395

§5083. Attendance on Power Boilers 395
§5084. Restamping of Boilers 395
§5085. Moving of Boilers 395
§5086. Safety Appliances 395
§5087. Variations 395
§5088. Conditions not Covered by these Rules and Regulations 396
§5089. Suggestions for Operations 396

Part VI. Uniform Construction Code Enforcement

Editor's Note: The Uniform Construction Code, LAC 55:VI.Chapters 1-3, has been moved to LAC 17, Construction. 397
Chapter 5. Enforcement of Louisiana State Uniform Construction Code 397
§501. General 397
§503. Farm or Recreational Structures 397
§504. Exemption for Industrial Facilities 397
§505. Commercial Plan Review 397
Chapter 7. Certificates of Registration 398
§701. General 398
§703. Classifications and Required Certifications for Municipal or Parish Building Code Enforcement Officers 398
§705. Third-Party Providers 399
§707. Continuing Education Requirements 400
Chapter 9. Temporary Exemption to Certification Requirement 400
§901. Employment after January 1, 2007 400
§903. Employment prior to January 1, 2007 400
§905. Grandfathering for Employment of at Least 10 Years on January 1, 2007 400
Chapter 11. Disciplinary Proceedings 401
§1101. General 401
§1102. Informal Proceedings 401
§1103. Formal Proceedings 401
§1105. Procedures 401
§1107. Decisions and Orders 402
§1109. Rehearings 402
§1111. Judicial Review of Adjudication 402
Chapter 13. Code Enforcement Violations 403
§1301. General 403
§1303. Informal Proceedings 403
§1305. Investigation Procedures 403
§1307. Judicial Proceedings 403

Part VII. Alcohol and Tobacco Control

Subpart 1. Beer and Liquor

Chapter 1. Beer Cash Regulations 405
§101. Definitions 405
§103. Credit Sale of Beer Prohibited—Retail Dealer Checks 405
§105. Wholesalers to Deposit Retailer Checks Currently—Records 406
§107. Reports by Wholesalers 406
§109. Wholesale Dealer Violations—Notices, Hearings and Findings 406
§111. Retail Dealer Violations—Notices, Hearings and Findings 407
§113. Notice of Violations and Hearings—Retailers and Wholesalers 408

§115. Attendance at Hearings—Retailers and Wholesalers 408
§117. Effect of Suspension of License and Cash Rule 408
§119. Commissioner's Assertion of Intention of These Regulations 409
Chapter 3. Liquor Credit Regulations 409
§301. Regulation I—Liquor Credit Law 409
§303. Regulation II—Adulterated Beverages 409
§305. Regulation III—Prohibitive Acts 410
§307. Regulation IV—Definitions and Explanations 411
§309. Regulation Number V—Solicitors 412
§311. Regulation VI—Fingerprints Required 412
§313. Regulation VII—Records 412
§315. Regulation VIII—Procedures Determined for Issuing Permits 412
§317. Regulation IX—Prohibition of Certain Unfair Business Practices 413
§319. High Alcoholic Content Beverages—Stocking, Pricing, and Rotating 420
§321. Staggering of Expiration Dates 420
§323. Regulation XI—Fairs, Festivals and Special Events 422
§324. Wine Producers; Fairs, Festivals, Farmer's Markets and Similar Venues 423
§325. Caterer's Permits 423
§327. Class C-Package Store Retail Alcoholic Beverage Permits 425
§329. Regulation XII—Participation in Hearing by Video Conference 426
§331. Regulation XIII—Posting of the National Human Trafficking Resource Center Hotline 426
§333. Regulation XIV—Alcoholic Beverage Container Label Registration 426
§335. Direct Shipment of Sparkling Wine or Still Wine to Consumers in Louisiana 427
§337. Online Grocery Pickup 428
Chapter 4. Alcohol Public Safety Regulations 429
§401. Digitized Identification Acceptance and Education 429
§403. Governmental Entity Special Events 429
§420. Low Alcohol Content Beverages, Malt Beverages and Ciders—Handling, Stocking, Pricing, and Rotating 430
Chapter 5. Responsible Vendor Program 430
§501. Purpose 430
§503. Definitions 430
§505. Vendors 430
§507. Servers and Security Personnel 431
§509. Training: Provider and Trainers 432
§511. Responsible Vendor Program Minimum Course Standards 434
Chapter 7. Live Entertainment 438
§701. Prohibited Acts 438
Chapter 8. Direct Delivery of Alcohol Public Safety Regulations 438
§801. General Direct Delivery Requirements 438
§803. Package Store Retail Alcohol Delivery Permit 440
§805. Restaurant Retail Alcohol Delivery Permit 440
§807. Third Party Alcohol Delivery Service Permit 441

Subpart 2. Tobacco

Chapter 31. Tobacco Permits 443
§3101. Definitions 443
§3103. Identifying Information for Permits 444
§3105. Additional Information for Licenses: Partnership, Corporation, Limited Liability Company (LLC) 444

§3107. Expiration of Licenses 444
§3109. Initial Application and Related Fees 445
§3111. Renewal Deadline: Penalties 445
§3113. Special Event Permits and Related Fees 445
§3115. Age Verification Requirements 446
§3117. Importation of Cigarettes by Wholesaler Only 446
§3119. Participation in Hearing by Video Conference 446

Part IX. Liquefied Petroleum Gas

Chapter 1. General Requirements 449
Subchapter A. New Dealers 449
§101. Prerequisite 449
§103. Definitions 449
§105. Applications 451
§107. Requirements 451
§109. Compliance with Rules 453
§111. Re-Application 454
§113. Classes of Permits and Registrations 454
Subchapter B. Dealers 457
§115. Compliance with Rules and Act 457
§117. Revocation of Permits 457
§119. Permit Fees 457
§121. Expiration of Permit 457
§123. Qualified Personnel 458
§125. Report Accidents and Fires 458
§127. Insurance 458
§129. Odorizing Gases 458
§131. Compliance with Rules 459
§133. Shall Purchase Containers Manufactured by Manufacturers Acceptable to the Authority Having Jurisdiction 459
§135. Condemnation of Tanks 459
§139. Liquefied Petroleum Gas Systems 459
§141. Customer Notification 460
§143. Inspections 460
§145. Dealer Permit Requirements 460
Subchapter C. Manufacturers of Liquefied Petroleum Gas Containers 460
§151. Classification of Containers 460
Subchapter D. Forms and Reports 460
§159. Required Forms and Reports 460
Subchapter E. Automatic Dispensers Used for Motor Fuel 461
§163. Automatic Dispensers Used for Motor Fuel 461
Subchapter F. Tank Trucks, Semi-Trailers and Trailers 462
§165. Measurement 462
§166. Truck/Delivery Truck Cargo Containers Compliance Requirements 462
§167. "Out-of-Gas Customers" or Interruption of Service Procedure 462
§169. Maintenance 462
Subchapter G. Systems Utilizing ASME and D.O.T. Containers 462
§171. Storage Capacity Requirements 462
§172. Maintenance 463
§175. Pressure Test, Leak Checks, and Inspection Required 463

§177. Appliance Installation and Connections 464
Subchapter H. Specification for Liquefied Petroleum Gas Installations at Schools and Places of Public Assembly 465
§179. Requirements for Plans and Specifications 465
Subchapter I. Adoption of Standards 465
§181. National Fire Protection Association Pamphlet Numbers 54 and 58 465
§183. Use of Liquefied Petroleum Gas as a Refrigerant Prohibited 467
Chapter 2. School Bus and Mass Transit Installations [Formerly Chapter 12] 467
§201. Registration/Inspection of School Bus/Mass Transit Vehicles 467
§205. Installation of Liquefied Petroleum Gas Systems Used as Engine Fuel System for School Bus/Mass Transit Vehicles 467
§207. Fueling 467
Chapter 3. Emergency Powers 467
§301. Procedure 467
Chapter 5. Rulemaking Petitions 468
§501. Submission of a Rulemaking Petition 468
§503. Consideration of a Rulemaking Petition 468
Chapter 15. Sale, Storage, Transportation and Handling of Anhydrous Ammonia 468
Subchapter A. New Dealers 468
§1501. Prerequisite 468
§1503. Definitions 469
§1505. Applications 469
§1507. Requirements 469
§1509. Compliance with Rules 470
§1511. Re-Application 470
§1513. Classes of Permits 470
Subchapter B. Dealers 473
§1515. Compliance with Rules and Act 473
§1517. Fine 473
§1519. Expiration of Permit 473
§1521. Qualified Personnel 473
§1523. Report Accidents 473
§1525. Insurance 474
§1527. Compliance with Rules 474
§1529. Condemnation of Tanks 474
§1531. Improper Installation 474
§1533. Customer Notification 475
§1535. Inspections 475
§1537. Dealer Permit Requirements 475
§1539. Testing of Tanks 475
§1541. Sketches 475
§1543. Transport/Delivery Truck Cargo Compliance 475
Subchapter C. Forms and Reports 476
§1545. Installation Report 476
Subchapter D. Adoption of Standard 476
§1547. National Standard 476

Part XI. Management and Finance

Chapter 1. Fees 477
§101. Initial and Contract Requests 477
§103. Automated Copy Fees 477
Chapter 3. Drug Testing Policy 478
§301. Introduction and Purpose 478
§303. Applicability 478
§305. Definitions 478
§307. Policy 478
§309. Conditions Requiring Drug Tests 479
§311. Procedure 479
§313. Confidentiality 479
§315. Responsibility 480
§317. Violation of the Policy 480
Chapter 5. Rulemaking Petitions 480
§501. Submission of a Rulemaking Petition 480
§503. Consideration of a Rulemaking Petition 480

Part XIII. Constables and Justices of the Peace Supplemental Pay

Chapter 1. Warrants 483
§101. Purpose 483
§103. Who Can Sign the Warrants 483
§105. Extent of Municipality's Obligation 483
§107. How to Indicate Changes 483
§109. Due Date 483
Chapter 3. New Employees 483
§301. Required Documentation for New Employees 483
§303. When to Submit the Oath of Office 483
Chapter 5. Changes in Status 484
§501. When to Notify Public Safety 484
§503. Resignations 484
§505. Death 484
Chapter 7. Payroll Information 484
§701. Eligibility Requirements 484
§703. Cut Off Date for Eligibility for that Month's Check 484
§705. Back Pay Policy 484
§707. Stop Payments 485
§709. Duplicate W-2's 485
§711. Correspondence 485
Chapter 20. Sample Forms 486
§2001. Sample Warrant 486

Part XV. Firemen Supplemental Pay

Chapter 1. Warrants 489
§101. Purpose 489
§103. Who Can Sign the Warrants 489
§105. Extent of Municipalities' Obligation 489
§107. How to Indicate Changes 489
§109. Due Date 489

Chapter 3. Applications 489
§301. Required Supportive Documentation 489
§303. Prior Service 489
§305. When to Submit Applications to Public Safety 490
Chapter 5. Changes in Status 490
§501. When to Notify Public Safety 490
§503. Resignations 490
§505. Suspensions 490
§507. Leave without Pay 490
§509. Change in Duties 490
§511. Change in Classification/Title 490
§513. Workmen's Comp 491
§515. Death 491
Chapter 7. Reinstatements 491
§701. Reinstatement from Suspension 491
§703. Reinstatement from Resignation 491
§705. Reinstatement from Workmen's Comp 491
§707. Reinstatement from L.W.O.P. 491
Chapter 9. Payroll Information 491
§901. Eligibility Requirements for Supplemental Pay 491
§903. Board Approval of Applications 491
§905. Waiting Period for New Employees 492
§907. Step Increases 492
§909. Cut Off Date for Raises 492
§911. Cut Off Date for Eligibility for that Month's Check 492
§913. Back Pay Policy 492
§915. Stop Payments 493
§917. Duplicate W-2's 493
§919. Correspondence 493
Chapter 20. Sample Forms 494
§2001. Sample Application with Prior Service— Civil Service 494
§2003. Sample Civil Service Personnel Action Form 495
§2005. Sample Certificate of Prior Service 496
§2007. Sample Application—Non-Civil Service 497
§2009. Sample Warrant 498

Part XVII. Municipal Police Officers Supplemental Pay

Chapter 1. Warrants 501
§101. Purpose 501
§103. Who Can Sign the Warrants 501
§105. Extent of Municipalities' Obligation 501
§107. How to Indicate Changes 501
§109. Due Date 501
Chapter 3. Applications 501
§301. Required Supportive Documentation 501
§303. Prior Service 501
§305. POST Certification 502
§307. When to Submit Applications to D.P.S. 502

Chapter 5. Change in Status 502
§501. When to Notify D.P.S. of Changes in Status 502
§503. Resignations 502
§505. Suspensions 502
§507. Leave without Pay (L.W.O.P.) 502
§509. Change in Duties 502
§511. Change in Classification/Title 502
§513. Workmen's Compensation 502
§515. Death 503
Chapter 7. Reinstatements 503
§701. Reinstatement from Suspension 503
§703. Reinstatement from Resignation 503
§705. Reinstatement from Workmen's Comp 503
§707. Reinstatement from L.W.O.P. 503
Chapter 9. Payroll Information 503
§901. Eligibility Requirements for Supplemental Pay 503
§903. Board Approval of Applications 503
§905. Waiting Period for New Employees 503
§907. Step Increases 504
§909. Cut Off Date for Raises 504
§911. Cut-Off Date for Eligibility for that Month's Check 504
§913. Back Pay Policy 504
§915. Stop Payments 504
§917. Duplicate W-2's 505
§919. Correspondence 505
Chapter 20. Sample Forms 506
§2001. Sample Application with Prior Service— Civil Service 506
§2003. Sample Civil Service Personnel Action Form 507
§2005. Sample Certificate of Prior Police Service 508
§2007. Sample Certificate of Prior Sheriff Service 509
§2009. Sample Application—Non-Civil Service 510
§2011. Sample POST Certificate 511
§2013. Sample Warrant 512

Part XIX. Deputy Sheriffs' Supplemental Pay

Chapter 1. General Provisions 515
§101. Supplemental Pay Requirements and Board Operations 515

Part XXI. Homeland Security and Emergency Preparedness

Chapter 1. General Provisions 517
§101. Overview 517
§103. Goals and Objectives 517
§105. Definitions 517
Chapter 3. Risk Assessment 518
§301. Biennial Risk Assessment 518
§303. Evacuating and Sheltering Private Nursing Home Residents 518
§305. Municipal Risk Assessment 518
§307. Parish Risk Assessment 518
§309. Transportation 518
§311. Evacuation and Sheltering Plan 518

Chapter 5. Resource Allocation and Distribution of Non-federal Cost Share 519
§501. Evacuation 519
§503. Sheltering 519

Part XXIII. Intrastate Mutual Aid Compact

Chapter 1. General Provisions 521
§101. Overview 521
§103. Purpose and Scope 521
§105. Definitions 521
Chapter 3. Limitations, Implementation, and Reimbursement 522
§301. Limitations 522
§303. Implementation 522
§305. Reimbursement 522

Part XXV. First Responder Best Practices for Administration of Opioid Antagonists

Chapter 1. Administration of Opioid Antagonists 525
§101. Purpose and Applicability 525
§103. Definitions 525
§105. Training Requirements 525
§107. Documentation and Tracking 526
§109. Immunity 526

Title 55
PUBLIC SAFETY
Part I. State Police

Chapter 1. Criminal Records Unit

§101. Charging and Collecting of Fee for Processing of Finger Print Cards

A. Pursuant to the provisions of R.S. 15:587, as amended, the Bureau of Criminal Identification and Information (Criminal Records Unit), announces it will begin collecting a $26 processing fee to offset the costs of conducting a criminal record search for the purpose of screening applicants for employment or license.

B. This fee will not be charged to law enforcement agencies conducting criminal investigations, applicants for full-time employment with a bona fide criminal justice agency, or to applicants for employment at race tracks.

C. Payments of the processing fee shall be made in the form of a cashier's check or money order payable to the Louisiana Bureau of Criminal Identification and Information Fund and payment shall accompany the request for such information.

D. Collection of the processing fee shall begin on February 20, 1986 and shall be applied to all requests received on and after that date.

AUTHORITY NOTE: Promulgated in accordance with R.S. 15:587.
HISTORICAL NOTE: Promulgated by the Department of Public Safety and Corrections, Office of State Police, LR 12:116 (February 1986), amended LR 43:676 (April 2017).

Chapter 2. Criminal History Background Checks on Licensed Ambulance Personnel and Nonlicensed Persons

§201. Statement of Department Policy

A. The rules contained herein are promulgated by the Louisiana Bureau of Criminal Identification and Information of the Department of Public Safety and Corrections, Office of State Police, in order to set forth the policies and procedures applicable to requesting and receiving criminal history background checks on licensed ambulance personnel and nonlicensed persons, pursuant to R.S. 40:1300.51 et seq., by employers and authorized agencies.

AUTHORITY NOTE: Promulgated in accordance with R.S. 15:575 et seq. and R.S. 40:1300.51 et seq.
HISTORICAL NOTE: Promulgated by the Department of Public Safety and Corrections, Office of State Police, LR 25:876 (May 1999).

§203. Definitions

A. For the purposes of these rules, the following words and phrases shall mean:

Applicant—a person who has submitted a request to the Louisiana Department of Public Safety and Corrections, Office of State Police, Louisiana Bureau of Criminal Identification and Information in accordance with these rules to be approved as an authorized agency.

Authorized Agency—an individual who meets the qualification requirements and has been approved by the bureau to receive criminal history information to conduct employment screening pursuant to R.S. 40:1300.51 et seq.

Bureau—the Louisiana Bureau of Criminal Identification and Information within the Department of Public Safety and Corrections, Office of State Police as provided for in R.S. 15:576.

Criminal History Record—shall have the same meaning as provided for in R.S. 15:576.

Employer—shall have the same meaning as provided for in R.S. 40:1300.51(6).

Licensed Ambulance Personnel—shall have the same meaning as provided for in R.S. 40:1300.51(5).

Nonlicensed Person—shall have the same meaning as provided for in R.S. 40:1300.51(3).

AUTHORITY NOTE: Promulgated in accordance with R.S. 15:575 et seq. and R.S. 40:1300.51 et seq.
HISTORICAL NOTE: Promulgated by the Department of Public Safety and Corrections, Office of State Police, LR 25:876 (May 1999).

§205. Application to be Approved as an Authorized Agency

A. An individual wishing to be approved as an authorized agency must submit an application to the bureau along with the following documents to prove the individual's qualifications.

1. The applicant must be currently licensed in the state of Louisiana as a private investigator or detective by the Louisiana State Board of Private Investigator Examiners as evidenced by current and valid licensure issued by the board.

2. The applicant must not currently be charged by bill of information or under indictment for, or have been convicted of, any felony offense in this state or any other jurisdiction, and submit to a background investigation to determine such.

3. Proof of qualification to do business within the state of Louisiana as evidenced by a valid certificate of

authority issued by the Secretary of State, and designation of an agent for service of process as required by law. If the applicant is operating as a sole proprietorship, a current valid occupational license will be accepted.

4. The applicant must execute a written agreement whereby she/he agrees to maintain the confidentiality of any and all information provided to it by the bureau pursuant to R.S. 40:1300.51 et seq., abide by all applicable laws, rules and regulations pertaining to receipt and use of criminal history information, cooperate in any auditing procedure conducted by the bureau, and inform the bureau in writing of any known violations regarding the use of criminal history information she/he receives.

B. Upon receipt of a completed application for approval as an authorized agency, the bureau shall review the application and conduct whatever investigation it deems necessary to verify the information. Upon completion of this review, the bureau shall inform the applicant in writing of its approval or denial of the application.

C. Each authorized agency must maintain the eligibility requirements to be approved as an authorized agency. Each authorized agency shall notify the bureau in writing of a change in its qualification requirements within 15 days of the change. Failure to continue to maintain the eligibility requirements shall result in cancellation of approval as an authorized agency.

AUTHORITY NOTE: Promulgated in accordance with R.S. 15:575 et seq. and R.S. 40:1300.51 et seq.

HISTORICAL NOTE: Promulgated by the Department of Public Safety and Corrections, Office of State Police, LR 25:876 (May 1999).

§207. Request for Criminal History Information

A. A request for the bureau to conduct a criminal history check authorized by R.S. 40:1203.2 shall be made on a form provided by the bureau and submitted to it by an employer or authorized agency.

B. Each request for a criminal history check authorized by R.S. 40:1203.2 submitted to the bureau shall be accompanied by the fee of $26 as established by R.S. 40:1203.2(B)(2) and LAC 55:I.101.A.

C. Each request for a criminal history check submitted to the bureau by an authorized agency shall be accompanied by a letter of engagement or contract with the employer as proof that the authorized agency may request and receive criminal history information on behalf of the employer. The results of each criminal history check submitted by an authorized agency on behalf of an employer will be reported to the authorized agency.

AUTHORITY NOTE: Promulgated in accordance with R.S. 15:575 et seq., and R.S. 40:1203.2 et seq.

HISTORICAL NOTE: Promulgated by the Department of Public Safety and Corrections, Office of State Police, LR 25:877 (May 1999), amended LR 43:676 (April 2017).

§209. Receipt and Use of Criminal History Information

A. Any authorized agency or employer which receives criminal history information pursuant to R.S. 40:1300.52 shall maintain the confidentiality of the records obtained.

B. The criminal history information received by an employer or authorized agency shall be used for the sole purpose of determining the applicant's eligibility for employment with the stated employer.

C. Any authorized agency who fails to maintain the confidentiality of criminal history information obtained pursuant to R.S. 40:1300.52, or who uses such information for any purpose other than determining the applicant's eligibility for employment with the stated employer, shall have its approval as an authorized agency canceled and be ineligible to receive criminal history information pursuant to R.S. 40:1300.52.

D. Any authorized agency or employer who fails to maintain the confidentiality of criminal history information obtained pursuant to R.S. 40:1300.51 et seq., or uses such information for any purpose other than determining the applicant's eligibility for employment with the stated employer shall be subject to all other penalties provided by law.

AUTHORITY NOTE: Promulgated in accordance with R.S. 15:575 et seq. and R.S. 40:1300.51 et seq.

HISTORICAL NOTE: Promulgated by the Department of Public Safety and Corrections, Office of State Police, LR 25:877 (May 1999).

Chapter 3. Training and Education

§301. User Fees for Louisiana State Police Facility

A. The Louisiana State Police announces maximum user fees for its training facilities pursuant to R.S. 40:1375(F) according to the following schedule.

Louisiana State Police Training Facility Rates	
Academy Dorm Room Single Occupancy	$33 per day
VIP Dorm Room Single Occupancy	$44 per day
Large Flat Classroom Seating for 50	$220 per day
Large Tiered Classroom Seating for 50	$220 per day
Small Flat Classroom Seating for 25-40	$165 per day
Classroom AV Package	$100 per day
Defensive Tactics Room Training for 75	$330 per day
Gymnasium/Track Training for 250	$550 per day
Training Tank Pool Training for 50	$550 per day
Auditorium Seating for 250	$550 per day
Computer Lab Seating for 25	$500 per day
Conference Room w/TV Seating for 15	$165 per day
Pistol Ranges Training for 25-50	$550 per 8 hr day
Range Classrooms Training for 25-50	$220 per 8 hr day
	$30 per hour over 8
Single Level Shoothouse	$550 per 8 hr day
	$330 per 4 hr day
	$55 per hour over 8
Bi-Level Shoothouse	$660 per 8 hr day
	$385 per 4 hr day
	$82 per hour over 8

Louisiana State Police Training Facility Rates	
Rifle Range Training for 17	$550 per day
Bomb Ranges	$550 per day
Explosives Classrooms	$220 per day
Explosives Breaching House #1 (Mechanical)	$330 per day
Explosives Breaching House #2 (Advanced)	$550 per day
Breach House Classroom	$175 per day
Device Assembly Building	$200 per day
Target Shoothouse Bi-level	$385 per day
Shooting Simulator	$220 per day
Post Blast Investigation Building #1	$275 per day
Post Blast Investigation Building #2	$275 per day
Post Blast Investigation Building #3	$220 per day
Storage Building (1600sf)	$200 per day
Storage Trailer (A/C)	$64 per day
JESTC Grounds (Terrain only)	$1,500 per day
Driving Track (Site only)	$1,320 per day
Complete EVOC facility	$10,000 per week
Driving Track (Site w/staff)	$2,300 per day
	$15,000 per week
Driving Course (Instructors)	$525 per person per 80 hr class
Driving Course (Defensive Driving)	$135 per person per 8 hr class
	$245 per person per 16 hr class
Driving Course (Teen/Civilian)	$135 per person per 8 hr class
Driving Course (In-Service)	$425 per person per 40 hr class
Driving Skills Pad/Pan	$550 per day
Police Training Vehicle	$100 per day
Driving Simulator	$220 per day
Driving Track Classroom(s)	$220 per day
Driving Track Office	$70 per day
	$300 per week
Conference Center Projector	$110 per day
Conference Center TV	$50 per day
Conference Center TV w/ VCR	$80 per day
Conference Center Lectern	$30 per day
Conference Center Laptop Computer	$110 per day
Conference Center AV Package	$100 per day
Conference Center Offices	$70 per day
	$300 per week
Conference Center Meeting Room Seating for 60	$550 per day
Conference Center Breakout Room Seating for 30	$330 per day
Conference Center Breakout Room Seating for 15	$220 per day
Seating for 15	$350 per day
Conference Center Lounge	$350 per day
Conference Center Dining Room	$550 per day
Conference Center Patio	$200 per day
Conference Center Lodge Rooms	
Lodges 3-6	$70 single/$90 double (GOVT)
	$70 single/$90 double (COMM)
VIP Lodge Rooms	$100 single/$100 double
Holden Classroom	$220 per day
Holden Facility Grounds	$3,300 per day
Holden Cabins	$33 per day
Applied Technology Labs	$110 per day
Video Production Services	$3-825 per day depending on service
Walker Firearms Range	$550 per day

AUTHORITY NOTE: Promulgated in accordance with R.S. 40:1375(F).

HISTORICAL NOTE: Promulgated by the Department of Public Safety and Corrections, Office of State Police, LR 12:116 (February 1986), amended LR 26:95 (January 2000), LR 26:2626 (November 2000), LR 34:94 (January 2008), LR 35:1136 (June 2009).

Chapter 4. Right to Review

Subchapter A. Right to Review Procedures

§401. Right to Review Procedures

A. In order for an individual, his authorized representative, or his attorney to receive a certified copy of his Louisiana criminal history, the individual must:

1. Complete the Rap Disclosure and Authorization Form;

2. Pay a $26 processing fee as authorized by R.S. 15:587.B. by money order, certified check or business check, made payable to Department of Public Safety for a Louisiana state criminal history background check;

3. Provide a current original 10 print fingerprint submission (not previously processed) on a FBI Applicant Fingerprint Card taken by a local law enforcement agency which bears the individual's name, race, sex, date of birth, Social Security number, place of birth, residence of applicant (address), and reason for fingerprint which reason should state: "Right to Review." Fingerprints may be obtained at State Police headquarters for a $10 fee as authorized per R.S. 15:587.B.

4. Mail or deliver in person the Authorization Form, Rap Disclosure Form, fee and fingerprints to: Louisiana State Police, Bureau of Criminal Identification and Information, P.O. Box 66614, Mail Slip A-6, Baton Rouge, LA 70896. If the required forms, fee, and fingerprints are mailed in, a stamped, self-addressed envelope is required to receive a reply.

B. A certified copy of an individual's Louisiana criminal history will be mailed to applicant if request is received in by mail or hand delivered to applicant if appearing on site in person.

AUTHORITY NOTE: Promulgated in accordance with LSA-R.S. 15:588.

HISTORICAL NOTE: Promulgated by the Department of Public Safety and Corrections, Office of State Police, Bureau of Criminal Identification and Information, LR 35:2818 (December 2009).

Chapter 5. Breath and Blood Alcohol Analysis Methods and Techniques

Subchapter A. Analysis of Breath

§501. Approval of Instruments to Conduct Blood Alcohol Analysis by Breath Sampling

A. After the Louisiana Department of Public Safety and Corrections has approved a prototype breath testing device as an acceptable model for chemical analysis in blood alcohol testing by breath sampling it shall be necessary for each individual instrument of the approved model to be

inspected and approved for use by the Office of State Police, Applied Technology Unit, and an instrument certification form shall be maintained for each individual instrument in the Applied Technology Unit. At least once every four months thereafter for the Intoxilyzer 5000 and once every six months for the Intoxilyzer 9000, each individual instrument shall be inspected, checked, and certified by the applied technology director, breath analysis supervisor, breath analysis specialist, breath analysis instructor specialist, or applied technology specialist of the Applied Technology Unit and a recertification form shall be maintained in the Applied Technology Unit. A copy of this certificate may be filed with clerk of the applicable court in the respective parish in which each device is used for blood/breath testing, and this copy shall be prima facie evidence as to the proper working order of the instrument. The inspecting applied technology director, breath analysis supervisor, breath analysis specialist, breath analysis instructor specialist, or applied technology specialist's permit number shall also be affixed to this certificate. Any manufacturer of any apparatus, device, or equipment made for the purpose of analyzing the alcoholic contents of the blood by breath sampling may request the Applied Technology Unit to approve such apparatus, device or equipment. The Applied Technology Unit will consider such a request upon submission of such information, instructions for use, exemplars and other pertinent data as the Applied Technology Unit may request. Before any blood/breath alcohol testing will be approved it must have undergone inspection and testing by the Applied Technology Unit. This period of testing and evaluation is for the purpose of assuring that an instrument is free of any design error, malfunction or operating problems and accurately and consistently determines the percent by weight by volume of alcohol in the blood at the time the test is administered by utilizing the 2100:1 correlation between alcohol in the breath and alcohol in the blood in accordance with the *Uniform Vehicle Code*.

B. Approval of Instrumentation. The following is the instrument approved by the Louisiana Department of Public Safety and Corrections, the Office of State Police, Applied Technology Unit for analysis of breath specimens for the determination of the blood alcoholic content therein.

1. Intoxilyzer 5000, which was formerly manufactured by CMI Inc. and distributed by Federal Signal Corporation, and since October 9, 1988 manufactured by CMI, Inc. a subsidiary of MPD, Inc. Every Intoxilyzer 5000 which has been certified and placed in operation in Louisiana is now and has been continuously, since the date of its original certification, an approved instrument for the analysis of breath specimens for the determination of blood alcoholic content regardless of any incorrect reference to its manufacture or distribution in the amendment of July 20, 1991.

2. Intoxilyzer 9000, manufactured by CMI, Inc., a subsidiary of MPD, Inc. Every Intoxilyzer 9000 which has been certified and placed in operation in Louisiana is now and has been continuously, since the original certification, an approved instrument for the analysis of breath specimens for the determination of blood alcoholic content.

AUTHORITY NOTE: Promulgated in accordance with R.S. 32:663.

HISTORICAL NOTE: Promulgated by the Department of Public Safety, Office of State Police, LR 4:390 (October 1978), amended LR 6:660 (November 1980), amended by the Department of Public Safety and Corrections, Office of State Police, LR 11:256 (March 1985), LR 14:362 (June 1988), repromulgated LR 14:441 (July 1988), amended LR 17:672 (July 1991), repromulgated LR 17:795 (August 1991), amended LR 18:1266 (November 1992), amended by the Department of Public Safety and Corrections, Office of State Police, Applied Technology Unit, LR 38:1992 (August 2012).

§503. Operator Qualifications

A. At the time of application for certification as an operator, an individual must:

1. be an employee of a Louisiana or federal law enforcement agency;

2. have successfully completed training established by and be certified by the Peace Officers Standards and Training Council (POST) or the Federal Law Enforcement Training Center (FLETC);

3. be at least 18 years of age;

4. be a high school graduate or satisfactorily pass the general education development (GED) test or an equivalent or higher educational background;

5. attain a score of 75 percent or better on a 16-hour operator's training course conducted by the applied technology unit. Course material to be covered will be taken from the *Chemical Test for Intoxication Training Manual* and/or the *Training Manual for the Intoxilyzer 5000* and/or *Training Manual for the Intoxilyzer 9000*. However, if an individual has already successfully completed a training course in chemical testing the individual may attend a specified course in the operation of the Intoxilyzer 5000 or Intoxilyzer 9000. To successfully complete the 16-hour training course and be certified to conduct breath analysis, the individual must:

a. obtain a 75 percent score on the written examination covering course material;

b. obtain a 75 percent score on the actual operation of the instrument and practical examination (running of an unknown alcohol solution). Both the written and the practical examination will be made up by the instructors of the Applied Technology Unit.

AUTHORITY NOTE: Promulgated in accordance with R.S. 37:3270 et seq.

HISTORICAL NOTE: Promulgated by the Department of Public Safety, Office of State Police, LR 4:390 (October 1978), amended LR 6:663 (November 1980), amended by the Department of Public Safety and Corrections, Office of State Police, LR 11:256 (March 1985), LR 14:362 (June 1988), repromulgated LR 14:442 (July 1988), amended LR 17:672 (July 1991), repromulgated LR 17:796 (August 1991), amended LR 27:1929 (November 2001), LR 32:1906 (October 2006), LR 38:2562 (October 2012), LR 38:2937 (November 2012).

§505. Instructor Qualification

A. Qualification for certification of individuals as instructors shall be as follows:

1. certified as an operator on the approved instrument by the applied technology unit;

2. attendance of an additional16-hour course approved by the applied technology unit;

3. involved in a chemical testing program approved by the applied technology unit.

AUTHORITY NOTE: Promulgated in accordance with R.S. 32:663.

HISTORICAL NOTE: Promulgated by the Department of Public Safety, Office of State Police, LR 4:390 (October 1978), amended LR 6:663 (November 1980), amended by the Department of Public Safety and Corrections, Office of State Police, LR 11:257 (March 1985), LR 14:362 (June 1988), repromulgated LR 14:442 (July 1988), amended LR 17:673 (July 1991), repromulgated LR 17:796 (August 1991), amended LR 27:1930 (November 2001).

§507. Qualification of Individuals for Instrument Maintenance and Inspection

A. Qualification of individuals to perform maintenance and inspection on the approved instrument shall be as follows:

1. employee of the Office of State Police, Applied Technology Unit in the capacity of applied technology director, breath analysis supervisor, breath analysis instructor specialist, applied technology specialist, or breath analysis specialist. In order to be employed in the capacity of applied technology director, breath analysis supervisor, breath analysis instructor specialist, applied technology specialist, or breath analysis specialist, the employee must have met all of the requirements as stated by the Department of Civil Service pertaining to the classification of applied technology director, breath analysis supervisor, breath analysis instructor specialist or applied technology specialist;

2. graduation from a state-accredited high school or the satisfactory passing of the General Education Development (GED) test or an equivalent educational background;

3. successful completion of a 16-hour operator's training course;

4. successful completion of a course on maintenance conducted by the manufacturer of the approved instrument used in blood/breath alcohol testing whereby the individual has received a satisfactory certificate stating such;

5. complete six months on-the-job training whereby the individual shall undergo instructions on the following, but not limited to:

a. calibration of the instrument;

b. checking calibration of the instrument;

c. trouble-shooting of the instrument;

d. performance of preventive and regular maintenance;

e. preparation and use of any wet bath simulator and solutions used in the calibration and calibration check;

f. inspection of the instrument received from the manufacturer to insure proper assembly calibration and the overall proper functioning of the instrument.

B. After the individual has completed on-the-job training and qualified on the above specification, then and only then may he be certified to perform maintenance and inspection on the approved blood/breath alcohol testing instrument. The individual will then be certified by the Louisiana Department of Public Safety and Corrections and issued a permit stating such. This permit shall then be prima facie evidence of the individual's qualification to perform such maintenance.

C. The maintenance and/or repair work shall be performed by applied technology director, breath analysis supervisor, or breath analysis specialist, breath analysis instructor specialist, or applied technology specialist of the Applied Technology Unit, who are certified by the Louisiana Department of Public Safety and Corrections to perform such. The instrument recertification form that is filed with the clerks of the respective courts every four months for the Intoxilyzer 5000 and every six months for the Intoxilyzer 9000, shall also have the inspecting applied technology director, breath analysis supervisor, or breath analysis specialist, breath analysis instructor specialist, or applied technology specialist permit number affixed to this certificate. This permit number shall be proof as to the certification of the inspecting applied technology director, breath analysis supervisor, or breath analysis specialist, breath analysis instructor specialist or applied technology specialist by the Louisiana Department or Public Safety and Corrections.

D. The procedure used by applied technology director, breath analysis supervisor, or breath analysis specialist, breath analysis instructor specialist, or applied technology specialist in the inspections of the instrument at least every four months for the Intoxilyzer 5000 and at least every six months for the Intoxilyzer 9000, for the checking of the calibration shall be as follows.

1. A Model Mark II-A wet bath breath alcohol simulator manufactured by Smith and Wesson, Model34C, and Model 10-4 manufactured by Guth Manufacturing Company, will be used or any other wet bath simulator approved by the United States Department of Transportation.

2. Use of this simulator and preparation of the contents shall be performed according to the instructions as per the manufacturer of the simulator's operating manual.

3. Solutions used in the simulators may also be produced by using a certified stock solution.

4. Once the simulator is made the known alcohol value may be determined by the use of a gas chromatograph or any other approved instrument and this will be the "known alcohol value." Calibration check of the instrument shall be within plus or minus 0.010 grams percent of the established "known alcohol value".

5. After the inspections are made by the applied technology director, breath analysis supervisor, or breath analysis specialist, breath analysis instructor specialist, or applied technology specialist, and all items are performed according to the maintenance section as listed under the instrument, the inspecting applied technology director, breath analysis supervisor, or breath analysis specialist, breath analysis instructor specialist or applied technology specialist will then certify that the instrument was in proper working order.

6. Records, or a copy covering maintenance, etc., on the instrument will be kept by the applied technology unit.

E. Personnel of the applied technology unit shall have the authority to instruct individuals as breath/alcohol testing field supervisors. These individuals will be able to perform minor service, repair and transport the instrument to various locations, run known alcohol solutions, testify in court, monitor the chemical testing program on a local level and confer with the Applied Technology Unit on any related matters pertaining to chemical testing. These individuals will have attended an additional training course whereby they have undergone instructions to perform their outlined duties. These individuals' permits shall state their authority to conduct such duties.

AUTHORITY NOTE: Promulgated in accordance with R.S. 32:663.

HISTORICAL NOTE: Promulgated by the Department of Public Safety, Office of State Police, LR 4:390 (October 1978), amended LR 6:662 (November 1980), amended by the Department of Public Safety and Corrections, Office of State Police, LR 11:257 (March 1985), LR 14:362 (June 1988), repromulgated LR 14:442 (July 1988), amended LR 17:673 (July 1991), repromulgated LR 17:796 (August 1991), amended LR 27:1930 (November 2001), amended LR 27:1930 (November 2001), amended by the Department of Public Safety and Corrections, Office of State Police, Applied Technology Unit, LR 38:1993 (August 2012).

§509. Permits

A. Upon determining the qualification of individuals to perform such analysis and duties, and after submitting an application for certification, the Louisiana Department of Public Safety and Corrections shall issue permits which shall be effective for the following periods with respect to classification.

1. Operator's Certification

a. Operators shall be certified for a period of two years following successful completion of the 16-hour operator's training course. These permits may be renewed after a refresher course given by the Applied Technology Unit or any other agency approved by the Applied Technology Unit.

b. In addition to being certified on any instrument currently approved by the Applied Technology Unit, an operator may also attend a specified course for certification on any new instrument that may be approved by the Applied Technology Unit. These permits shall also be in effect for a period of two years.

2. Breath Alcohol Testing Field Supervisors. Breath alcohol testing field supervisors shall be certified for a period of two years.

3. Instructors. Instructors shall be certified for a period of five years. However, once he is no longer involved in a chemical testing program, his certification shall terminate and then only be recertified after he has once again become involved in a chemical testing program and demonstrated his knowledge of instructions to the applied technology director.

4. Maintenance. Once an applied technology director, breath analysis supervisor, breath analysis instructor specialist, or applied technology specialist is initially certified, his permit shall remain effective for the duration of his employment.

B. In the event of an emergency such as a natural disaster, the Applied Technology Unit may extend the permit card expiration date for up to an additional 180 days. The extension would only apply to the cards that would expire during the time the disaster occurred.

AUTHORITY NOTE: Promulgated in accordance with R.S. 32:663.

HISTORICAL NOTE: Promulgated by the Department of Public Safety, Office of State Police, LR 4:392 (October 1978), amended LR 6:663 (November 1980), amended by the Department of Public Safety and Corrections, Office of State Police, LR 11:257 (March 1985), LR 14:363 (June 1988), repromulgated LR 14:443 (July 1988), amended LR 17:674 (July 1991), repromulgated LR 17:797 (August 1991), amended LR 27:1931 (November 2001), amended by the Department of Public Safety and Corrections, Office of State Police, Applied Technology Unit, LR 32:110 (January 2006), LR 32:110 (January 2006), LR 38:1993 (August 2012).

§511. Recording Analysis and Recertification Date

A. The breath testing instrument(s) automatically stores all test records into a data bank.

B. Each time the approved instrument is inspected and certified, the date of certification shall be placed on the instrument and the operator will record said dates on the operational check list.

AUTHORITY NOTE: Promulgated in accordance with R.S. 32:663.

HISTORICAL NOTE: Promulgated by the Department of Public Safety, Office of State Police, LR 4:392 (October 1978), amended LR 6:663 (November 1980), amended by the Department of Public Safety and Corrections, Office of State Police, LR 11:257 (March 1985), LR 14:364 (June 1988), repromulgated LR 14:443 (July 1988), amended LR 17:674 (July 1991), repromulgated LR 17:797 (August 1991), amended by the Department of Public Safety and Corrections, Office of State Police, Applied Technology Unit, LR 38:1993 (August 2012).

§513. Procedure for Analysis Using the Intoxilyzer 5000

A. General observation of the subject for a period of not less than 15 minutes prior to testing whereby the subject shall not have ingested alcohol, alcoholic beverages, regurgitated, vomited, or taken anything by mouth.

B. The operator conducting blood/breath analysis shall conduct such analysis in accordance with the "Intoxilyzer 5000 operational check list" which contains, but is not limited to the following:

1. completing the information section concerning such things as name and driver's license number of the subject, date, instrument number, and certification date;

2. press the start button, insert test record card and check the display panel for instructions;

3. new and clean mouthpiece attached to the breath inlet hose;

4. subject instructed to blow through the mouthpiece sufficiently until the instrument accepts the proper breath sample;

5. remove the test record card and attach it to the checklist.

AUTHORITY NOTE: Promulgated in accordance with R.S. 32:663.

HISTORICAL NOTE: Promulgated by the Department of Public Safety, Office of State Police, LR 4:390 (October 1978), amended LR 6:661 (November 1980), amended by the Department of Public Safety and Corrections, Office of State Police, LR 11:259 (March 1985), LR 14:364 (June 1988), repromulgated LR 14:443 (July 1988), amended by the Department of Public Safety and Corrections, Office of State Police LR 17:674 (July 1991), repromulgated LR 17:797 (August 1991).

§514. Procedure for Analysis Using the Intoxilyzer 9000

A. General observation of the subject for a period of not less than 15 minutes prior to testing whereby the subject shall not have ingested alcohol, alcoholic beverage, regurgitated, vomited, or taken anything by mouth.

B. The operator conducting blood/breath analysis shall conduct such analysis in accordance with the “Intoxilyzer 9000 instrument display” which includes, but is not limited to the following:

1. swipe the operator card or press the start test button for instructions;

2. enter information as prompted by the instrument display;

3. new and clean mouthpiece attached to the breath inlet hose;

4. subject instructed to blow through the mouthpiece sufficiently until the instrument accepts the proper breath sample;

5. the subject test information is printed, electronically recorded, and retained by the Applied Technology Unit.

AUTHORITY NOTE: Promulgated in accordance with R.S. 32:663.

HISTORICAL NOTE: Promulgated by the Department of Public Safety and Corrections, Office of State Police, Applied Technology Unit, LR 38:1994 (August 2012).

§515. Maintenance Inspection for the Intoxilyzer 5000

A. Maintenance inspection shall be performed on a routine basis at least once every four months by the applied technology director, breath analysis supervisor, breath analysis instructor specialist, or applied technology specialist. Items to be inspected shall include, but not be limited to the following:

1. clean instrument;

2. running of a known alcohol value thereby checking the instrument and calibration. Results shall be within plus or minus 0.010 grams percent of the known alcohol value;

3. insure that the instrument is locked;

4. check printer to see if it is printing out properly;

5. check breath tube inlet hose;

6. in event repair work is needed, it shall be recorded in detail.

B. In the event of a natural disaster, the applied technology director may extend the certification period of the affected instruments to not more than 180 days after the current recertification anniversary date.

AUTHORITY NOTE: Promulgated in accordance with R.S. 32:663.

HISTORICAL NOTE: Promulgated by the Department of Public Safety, Office of State Police, LR 4:391 (October 1978), LR 11:259 (March 1985), LR 14:364 (June 1988), repromulgated LR 14:444 (July 1988), amended LR 17:675 (July 1991), repromulgated LR 17:798 (August 1991), amended by the Department of Public Safety and Corrections, Office of State Police, Applied Technology Unit, LR 32:110 (January 2006), LR 38:1994 (August 2012).

§516. Maintenance Inspection for the Intoxilyzer 9000

A.1. Maintenance inspection shall be performed on a routine basis at least once every six months by the applied technology director, breath analysis supervisor, breath analysis instructor specialist, or applied technology specialist. Items to be inspected shall include, but not be limited to the following:

a. clean instrument;

b. check printer operation;

c. check breath tube inlet hose.

2. In event repair work is needed, it shall be recorded in detail.

B. In the event of a natural disaster, the applied technology director may extend the certification period of the affected instruments to not more than 180 days after the current recertification anniversary date.

AUTHORITY NOTE: Promulgated in accordance with R.S. 32:663.

HISTORICAL NOTE: Promulgated by the Department of Public Safety and Corrections, Office of State Police, Applied Technology Unit, LR 38:1994 (August 2012).

Subchapter B. Analysis of Blood

§551. Definition

A. For purposes of these regulations, *alcohol* shall mean ethyl alcohol.

AUTHORITY NOTE: Promulgated in accordance with R.S. 32:663.

HISTORICAL NOTE: Promulgated by the Department of Public Safety and Corrections, Office of State Police, LR 14:360 (June 1988), amended LR 17:675 (July 1991), repromulgated LR 17:798 (August 1991).

§553. Certification; Renewal of Certification; Suspension, Revocation or Cancellation

A. All persons seeking certification to conduct blood alcohol analysis shall:

1. make application to the Louisiana State Police Crime Laboratory;

2. successfully complete an accredited college or university course of study which meets all academic requirements for at least a bachelor's degree in one of the chemical, physical or biological sciences or a bachelor's degree in medical technology or forensic science;

3. successfully complete a course of at least 24 hours instruction concerning blood alcohol testing conducted by the Louisiana State Police Crime Laboratory. This course shall include, but not be limited to, the following: procedures; pharmacology and physiology of alcohol; theory of gas chromatography; maintenance, repair and inspection of instrumentation; and preparation and analysis of blood samples;

4. conduct certification testing set up by the Louisiana State Police Crime Laboratory, including demonstrating the necessary maintenance and repair knowledge required to certify a gas chromatograph as operating properly;

5.a. obtain a 75 percent score on the written examination covering course material; and

b. successful analysis of four certification samples on the operation of the gas chromatograph.

B. Certificates may be renewed upon completion of each of the following:

1. application to the Louisiana State Police Crime Laboratory;

2. obtain a 75 percent score on a recertification test given by the Louisiana State Police Crime Laboratory or any other agency approved by the Louisiana State Police Crime Laboratory;

3. successful analysis of four certification samples as stated in §559.

C. Certification and renewal thereof shall be valid for a period of two years from the date of issuance.

D. All persons deemed qualified to conduct blood alcohol analysis by their respective laboratory when that laboratory has been accredited and permitted in blood alcohol analysis by the terms set forth in the Louisiana statutory criminal law and procedure, R.S. 32:663, are not required to seek individual certification.

E. Failure to adhere to any of the rules and regulations set forth herein upon establishment of said failure may result in suspension, revocation or cancellation of the certification.

AUTHORITY NOTE: Promulgated in accordance with R.S. 32:663.

HISTORICAL NOTE: Promulgated by the Department of Public Safety, Office of State Police, LR 6:660 (November 1980), amended by the Department of Public Safety and Corrections, Office of State Police, LR 11:259 (March 1985), LR 14:360 (June 1988), LR 17:675 (July 1991), repromulgated LR 17:798 (August 1991), amended LR 44:95 (January 2018).

§555. Certified Techniques of Analyst

A. The certified analyst shall inspect instrumentation and equipment immediately before analysis is begun to insure that the instrument is operating properly and that test results will be accurate and within the tolerances indicated below.

B. The methods approved for alcohol analysis of blood are:

1. gas chromatography—headspace sampling with internal standard;

2. gas chromatography—direct injection with internal standard;

3. gas chromatography/mass spectrometry-headspace sampling with internal standard;

4. gas chromatography/mass spectrometry-direct injection with internal standard.

C. Procedures shall include the following controls in conjunction with each batch of samples analyzed:

1. a system blank analysis;

2. analysis of a whole blood control of known alcohol content within the range 0.04 grams percent to 0.40 grams percent the result of which analysis must coincide with the known blood alcohol value of the control specimen $\pm$0.01 grams percent if validity is to be assigned to the results for the batch analyzed.

D. Replicate analysis shall be performed in order to eliminate the possibility of undetected errors.

E. Results shall be expressed in terms of percent w/v (grams percent) that is, grams of alcohol per 100 milliliters of blood rounded downward to the second decimal place, for example, 0.237 grams percent shall be reported as 0.23 grams percent.

F. Analytical procedures for determining the concentration of alcohol in the blood shall meet the following requirements.

1. The accuracy of the procedures shall be such as consistently to attain results within $\pm$0.01 grams percent of the known value over the range 0.04 grams to 0.40 grams percent in analysis of commercially whole blood controls.

2. The precision of the analysis shall be such as consistently to attain a reproductability not greater than ±0.005 grams percent from the mean value in replicate analysis.

3. The blank values yielded by the procedure in analysis of alcohol-free reagents consistently shall be not greater than 0.00 grams percent.

4. Procedures for the analysis of whole blood from living and post mortem subjects shall differentiate ethyl alcohol from all other substances.

G. Blood drawn for the purposes of determining the alcoholic content therein shall have been taken with the contents of a sealed blood collection kit approved by the Louisiana State Police crime laboratory. Such kits will be made available to all law enforcement agencies by the Louisiana State Police.

1. All kits approved by the Louisiana State Police crime laboratory contain the necessary preservative to insure stability of the sample as provided by the manufacturer and contain no ethyl alcohol. Each approved kit must be manufactured specifically for blood alcohol determinations in living or post-mortem subjects.

2. Following analysis, the evidence will be stored for a period of one year at room temperature or under refrigeration by either the testing facility or the submitting agency and then may be destroyed. Evidence collected subsequent to law enforcement investigations and/or search warrant executions are subject to the aforementioned storage period and destruction policy. Additional storage duration and/or destruction criteria may be implemented by the testing facility or submitting agency.

3. The blood sample taken for analysis may be maintained at room temperature and delivered to the designated collection site of each enforcement agency within 24 hours of the end of the collecting officer's shift. It shall be transported then to the laboratory utilized for analysis at the earliest opportunity after collection, not to exceed 10 days.

H. Each laboratory performing blood alcohol analysis must either be permitted by terms set forth in the Louisiana statutory criminal law and procedure, R.S. 32:663, or submit to the Louisiana State Police crime laboratory for approval of written procedures with regard to the following minimum standards.

1. Analysis must be performed on a gas chromatograph with or without a mass spectrometer.

2. Any procedures for blood alcohol determinations as outlined in these rules and regulations shall be considered minimum standards.

3. Maintenance repair and inspection must be in accordance with guidelines listed in §557.

AUTHORITY NOTE: Promulgated in accordance with R.S. 32:663.

HISTORICAL NOTE: Promulgated by the Department of Public Safety, Office of State Police, LR 6:663 (November 1980), amended by the Department of Public Safety and Corrections, Office of State Police, LR 11:259 (March 1985), LR 14:360 (June 1988), LR 17:675 (July 1991), repromulgated LR 17:798 (August 1991), amended LR 26:2624 (November 2000), LR 37:1416 (May 2011), LR 44:95 (January 2018).

§557. Maintenance, Repair and Inspection

A. Maintenance, repair and inspection of a gas chromatograph with or without a mass spectrometer may be performed by certified blood alcohol analysts. This may include but not be limited to cleaning, replacing septums, changing columns, checking gases and flow rates, checking "O" rings and air filters, adjusting temperature settings and any other routine checks that are deemed necessary for accurate performance. A certified blood alcohol analyst may perform diagnostic testing, as instructed by a service engineer from the manufacturer. Following each maintenance or repair, inspection of the instrument shall include running a known alcohol standard to insure that the instrument is in proper working order. The gas chromatograph shall be inspected and certified by the department at least every 180 days and the certificate issued shall be proof as to the certification and accuracy of the instrument unless the laboratory is permitted by the terms set forth in the Louisiana statutory criminal law and procedure, R.S. 32:663. A log shall be maintained on each gas chromatograph and all inspections and certifications noted therein.

B. A log book listing all repair work, maintenance and inspection shall be kept and will be available for inspection. The minimum information required in the log book shall state the date, time, nature of work, and name of person(s) performing task.

C. At the time of the periodic inspection and certification, the analyst or technician performing said inspection shall perform at least four analyses, the first three of which shall each utilize certified reagent solutions with alcohol concentrations between 0.04 and 0.30 grams percent. The fourth analysis shall utilize a known reagent solution of acetone and ethyl alcohol mixed with deionized water to check the resolution of the gas chromatograph.

D. the department shall formulate a program for the inspection and certification of all gas chromotographs with or without a mass spectrometer being used for blood alcohol analyses in this state by laboratories not permitted by terms set forth in the Louisiana statutory criminal law and procedure, R.S. 32:663. The completion of the initial inspection and certification shall be on or before January 20, 1992; however, the lack of certification prior to January 20, 1992 shall not be grounds for the disqualification of the accuracy or authenticity of the results obtained from the use of any such gas chromatograph with or without a mass spectrometer.

AUTHORITY NOTE: Promulgated in accordance with R.S. 32:663.

HISTORICAL NOTE: Promulgated by the Department of Public Safety and Corrections, Office of State Police, LR 14:361 (June 1988), amended LR 17:676 (July 1991), repromulgated LR 17:799 (August 1991), amended LR 44:96 (January 2018).

§559. Certification Testing

A. Certification testing is not required for any persons deemed qualified to conduct blood alcohol analysis by their respective laboratory when the laboratory has been accredited and permitted in blood alcohol analysis by the terms set forth in the Louisiana statutory criminal law and procedure, R.S. 32:663.

B. An applicant for certification to perform blood alcohol analysis shall submit for certification testing conducted by the Louisiana State Police crime laboratory.

1. Applicant shall perform analysis on four unknown samples of whole blood at least three of which shall contain ethyl alcohol percentages of between 0.01 grams and 0.40 grams percent. The fourth sample may contain ethyl alcohol within previously stated values, other volatile compounds or a sample free of any volatile compounds.

2. If samples are prepared in-house, the stock solution used to prepare certification testing shall be from a sealed bottle of 200 proof pure anhydrous grade ethyl alcohol diluted to a concentration of 5g/100ml with deionized water. This will then be diluted further with alcohol-free blood to obtain concentrations within the range listed in the previous Section.

3. A sample of each unknown shall be tested and retained by the Louisiana State Police crime laboratory until applicant is certified.

4. The samples will then be sent to each applicant for alcohol analysis.

5. In lieu of Paragraphs 2-4, the applicant may utilize unknown samples purchased from an approved proficiency test provider. The individual laboratory shall possess approval criteria based on their individual laboratory's accreditation requirements.

6. The applicant shall submit the results of analysis, the completed application, the procedure used for analysis, and all paperwork generated in the process of determining the blood alcohol values to the Louisiana State Police crime laboratory.

7. Results must be within a value of $\pm$10 percent of known values. In addition, paperwork will be reviewed to determine that all procedures were in compliance with these rules and regulations.

8. After review of all paperwork and if results are within accepted ranges, the applicant will be certified as a blood alcohol analyst and will be issued a blood alcohol analyst certificate. This certificate will be valid for a period of two years.

AUTHORITY NOTE: Promulgated in accordance with R.S. 32:663.

HISTORICAL NOTE: Promulgated by the Department of Public Safety and Corrections, Office of State Police, LR 14:361 (June 1988), amended LR 17:676 (July 1991), repromulgated LR 17:799 (August 1991), amended LR 44:96 (January 2018).

§561. Quality of Glassware and Supplies

A. All nondisposable glassware used in the blood alcohol analyses and standard calibration solutions must be cleaned with non-alcoholic detergents and must be free of any foreign residue.

B. All nondisposable supplies must be cleaned and contain no interfering substances which could affect the blood alcohol analysis test.

C. All chemicals used shall be at least reagent grade.

D. All reagent solutions utilized in confirming instrument calibration, maintenance and certification shall be drawn from commercially available solutions with known and certified alcohol contents between 0.04 grams and 0.40 grams percent. The manufacturer's certificate of standard reagent quality shall be prima facie evidence as to the standard of quality of the reagent solutions.

AUTHORITY NOTE: Promulgated in accordance with R.S. 32:663.

HISTORICAL NOTE: Promulgated by the Department of Public Safety and Corrections, Office of State Police, LR 14:361 (June 1988), amended LR 17:676 (July 1991), repromulgated LR 17:800 (August 1991), amended LR 26:2624 (November 2000).

§563. Proficiency Testing

A. Each laboratory providing blood alcohol analysis is to participate in a regional or national proficiency testing program at least twice a year or a proficiency testing program conducted by the State Police crime laboratory, which participation shall be certified for each such laboratory. A copy of the results shall either be forwarded to the State Police crime laboratory in Baton Rouge, Louisiana within 30 days of receipt by each laboratory or be retained in the proficiency test records for each authorized person by their respective laboratory.

AUTHORITY NOTE: Promulgated in accordance with R.S. 32:663.

HISTORICAL NOTE: Promulgated by the Department of Public Safety and Corrections, Office of State Police, LR 14:361 (June 1988), amended LR 17:677 (July 1991), repromulgated LR 17:800 (August 1991), amended LR 44:97 (January 2018).

§565. Certified Personnel

A. Each "chemist" and each "qualified technician," as these terms are utilized in R.S. 32:664, must be certified by an accredited licensing agency as a certified phlebotomist in order to remove blood samples for purposes of determining alcoholic content.

AUTHORITY NOTE: Promulgated in accordance with R.S. 32:663.

HISTORICAL NOTE: Promulgated by the Department of Public Safety and Corrections, Office of State Police, LR 17:677 (July 1991), repromulgated LR 17:800 (August 1991).

Subchapter C. Analysis of Blood and Urine for Controlled Dangerous Substances

§571. Definitions

A. The following words and terms used in this Subchapter shall have the following meanings.

Aliquot—different samples from the same specimen.

Analyte—the drug or drug metabolite suspected or detected.

Chain of Custody—the accounting of the integrity of each specimen through the tracking of all individuals or agencies which may have handled the sample from the point of collection to final disposition.

Confirmation Test—a second analytical procedure to identify the presence or absence of a specific drug or drug metabolite.

Crime Laboratory—the Louisiana State Police Crime Laboratory.

Department—the Department of Public Safety and Corrections, Public Safety Services.

False Negative—not reporting an analyte which is present in the sample.

False Positive—the reporting of an analyte which is not present in the sample.

Proficiency Testing Program—performance of testing on specimens containing drugs or drug metabolites or lack of which the laboratory shall be prepared to assay in concentration ranges that allow detection of the analyte by commonly used screening techniques.

Quality Assurance—a program to ensure quality standards in all aspects of the testing process including but not limited to, specimen acquisition, chain of custody, screening and confirmation testing, and validation of analytical procedure.

Quality Control—procedures designed to assess the conduct of each step of the process for testing of drugs.

Retention Times—the time for a sample component to elute from a chromatographic column which is useful in the possible identification of that component.

Screening (Initial) Test—a test documented to indicate the possible presence of absence of a particular drug, drug class, or drug metabolite.

AUTHORITY NOTE: Promulgated in accordance with R.S. 32:663.

HISTORICAL NOTE: Promulgated by the Department of Public Safety, Office of State Police, LR 26:2624 (November 2000).

§573. Qualifications of Forensic Laboratories

A. Each forensic laboratory seeking approval from the department to perform analysis of controlled dangerous substances in bodily fluids shall comply with the qualifications as established by the Louisiana State Police Crime Laboratory in accordance with these rules.

AUTHORITY NOTE: Promulgated in accordance with R.S. 32:663.

HISTORICAL NOTE: Promulgated by the Department of Public Safety, Office of State Police, LR 26:2624 (November 2000).

§575. Operating Procedures

A. The laboratory shall have a procedural manual which will include detailed descriptions of procedures for testing. In addition, laboratory policies shall exist which govern sample receiving, chain of custody, analysis, quality control and quality assurance, choice of reagents, review of data, and reporting. The procedural manual shall include the following:

1. instructions for preparation of reagents;

2. details of the analytical procedure;

3. instructions for preparation of controls and calibrators;

4. references to include theory and principle of the method.

AUTHORITY NOTE: Promulgated in accordance with R.S. 32:663.

HISTORICAL NOTE: Promulgated by the Department of Public Safety, Office of State Police, LR 26:2624 (November 2000).

§577. Personnel

A. The toxicology laboratory shall be supervised by a person who is qualified by reason of appropriate education and experience to assume the required professional, organizational, educational, and administrative responsibilities. The supervisor shall possess at least a bachelor's of science degree from an accredited college or university in one of the chemical, physical or biological sciences, medical technology, criminalistics, forensic science, toxicology, or pharmacology, and shall have at least four years of full-time experience in a toxicology or forensic laboratory.

B. Analytical personnel shall also possess the minimum educational requirements as stated for the supervisor. The analyst shall be trained and show proficiency in each procedure performed.

AUTHORITY NOTE: Promulgated in accordance with R.S. 32:663.

HISTORICAL NOTE: Promulgated by the Department of Public Safety, Office of State Police, LR 26:2625 (November 2000).

§579. Certification

A. Individuals seeking to conduct drug testing in compliance with R.S. 32:661-669, shall:

1. make application to the Louisiana State Police Crime Laboratory;

2. submit a copy of their laboratory's operating procedural manual as related to toxicological testing;

3. successfully screen a sample comprised of one or more drugs or drug metabolites in a sample of whole blood, serum, or urine matrix. The sample may be furnished through the Louisiana State Police Crime Laboratory. Successful screening shall consist of:

a. not reporting any false positives;

b. confirming the presence of no less that 75 percent of the analytes routinely screened.

B. Personnel employed full time in the toxicology laboratory for a period of two years prior to the adaptation of these rules, shall be granted certification based upon review by the Louisiana State Police Crime Laboratory.

C. Certification shall be valid for a period of two years from the date of issuance or such time as determined by the Director of the Louisiana State Police Crime Laboratory. Certificates may be renewed upon subsequent application and successful completion of Paragraph A.3 above.

D. All persons deemed authorized to conduct toxicological analysis on bodily fluids by their respective laboratory when that laboratory has been accredited and permitted in toxicological analysis by the terms set forth in the Louisiana statutory criminal law and procedure, R.S. 32:663, are not required to seek individual certification.

E. Failure to adhere to any of the rules and regulations set forth herein or to maintain any qualification, as determined by the director of the crime laboratory, may result in suspension, revocation, or cancellation of the certificate.

AUTHORITY NOTE: Promulgated in accordance with R.S. 32:663.

HISTORICAL NOTE: Promulgated by the Department of Public Safety, Office of State Police, LR 26:2625 (November 2000), amended LR 44:97 (January 2018).

§581. Receiving and Sampling of Evidence

A. Evidence submitted for toxicological examination shall be labeled for identification, securely sealed, and submitted in a container appropriate for shipping and maintaining security. They shall have been taken with the contents of a blood and/or urine collection kit approved by the Louisiana State Police crime laboratory. Such kits shall be made available to all law enforcement agencies through the Louisiana State Police.

B. The kits shall contain no components which would interfere with the results of the test and each kit must be suitable for the purpose of collecting blood and/or urine for forensic toxicological determinations.

C. The sample taken for analysis should be refrigerated and delivered to a designated collection site within 24 hours following the end of the collecting officer’s shift. It shall then be transported to the laboratory utilized for analysis at the earliest opportunity after collection, not to exceed 10 days.

D. After submitting the sample to the testing facility, specimens shall then be refrigerated in a designated evidence security area.

E. Following analysis, the evidence will be stored for a period of one year under refrigeration either at the testing facility or by the submitting agency. After the one-year storage period, the evidence may be destroyed. Evidence collected subsequent to law enforcement investigations and/or search warrant executions are subject to the aforementioned storage period and destruction policy. Additional storage duration and/or destruction criteria may be implemented by the testing facility or submitting agency.

AUTHORITY NOTE: Promulgated in accordance with R.S. 32:663.

HISTORICAL NOTE: Promulgated by the Department of Public Safety, Office of State Police, LR 26:2625 (November 2000), amended LR 37:1416 (May 2011), LR 44:97 (January 2018).

§583. Analytical Procedures

A. Analytical procedures shall include the use of at least two tests (a screening test and a confirmation test, or two confirmation tests) performed for each analyte present. If a screening test is used, the confirmation tests shall be based on a different physical or chemical principle from that of the screening test and offer a higher degree of specificity. All confirmation tests shall be performed using gas chromatography/mass spectrometry or liquid chromatography/mass spectrometry. Screening tests may include, but not be limited to, colorimetric, enzymatic, or chromatographic analysis. Confirmation of the identity of an analyte in a different specimen from that used for the first test (e.g., blood and urine) is acceptable, as is reconfirmation in a second aliquot of the same specimen.

B. Positive identification of an analyte shall at a minimum be based on the possible presence of the analyte or the analyte class in the screening test and its presence in the confirmatory test. Confirmation shall be based on the identification of at least three major ions with that of a reference analyte, unless otherwise specified below. When confirmation is made by selective ion monitoring in either gas or liquid chromatography procedures, correlation between ion ratios of the base peak and another major peak shall be within 20 percent for gas chromatography/mass spectrometry procedures and within 30 percent for liquid chromatography/mass spectrometry procedures. When confirmation is made by multiple reaction monitoring using either gas or liquid chromatography procedures, the presence of a characteristic precursor ion and two product ions shall have an ion ratio within + or – 30 percent to that of a calibrator, or the average of all calibrators for the run. When the confirmation is made by gas or liquid chromatography coupled to a Time-of-Flight (ToF) or other high-resolution mass spectrometer (HRMS), the presence of a characteristic precursor ion with overall mass accuracy shall be less than 15 parts-per-million or + or – 5 millimass units. At least one additional product ion compared to that of a reference analyte shall also be present. Retention times between the analyte in question and the reference analyte shall be “within

+ or – 2 percent" for gas chromatography/mass spectrometry procedures and "within + or – 6 seconds or + or – 10 percent" for liquid chromatography/mass spectrometry procedures.

AUTHORITY NOTE: Promulgated in accordance with R.S. 32:663.

HISTORICAL NOTE: Promulgated by the Department of Public Safety, Office of State Police, LR 26:2625 (November 2000), amended LR 37:1417 (May 2011), LR 44:1272 (July 2018), LR 45:1809 (December 2019), LR 46:775 (June 2020).

§585. Review of Data

A. Before results are reported, all analytical data shall be reviewed and approved by the toxicology supervisor or a designee with the analytical protocols used by the laboratory. The review shall be documented within the analytical record.

AUTHORITY NOTE: Promulgated in accordance with R.S. 32:663.

HISTORICAL NOTE: Promulgated by the Department of Public Safety, Office of State Police, LR 26:2625 (November 2000).

§587. Quality Assurance

A. The laboratory shall participate in an external proficiency testing program for drugs in at least one type of specimen at least once every calendar year. The results of the proficiency testing shall be reviewed by the department.

AUTHORITY NOTE: Promulgated in accordance with R.S. 32:663.

HISTORICAL NOTE: Promulgated by the Department of Public Safety, Office of State Police, LR 26:2626 (November 2000).

§589. Maintenance, Repair and Inspection

A. Maintenance and repair of all analytical instrumentation used for the purpose of analyzing the samples required in these guidelines may be performed by the supervisor of the toxicology unit or by an analyst assigned to the unit. This may include, but not be limited to, cleaning, replacing septa and injection port liners, changing columns, changing gases and gas flows, adjusting temperature settings, and other routine checks deemed necessary for accurate performance. In addition, the supervisor or analyst may perform diagnostic testing and repair as instructed by a service engineer from the equipment manufacturer or other service repair facility or from a manual provided by the equipment manufacturer detailing diagnostics and repair. Following each maintenance and repair, inspection of the instrument shall include the analysis of a known drug standard or mixture of standards to insure that the instrument is in proper working order. Instrumentation is to be checked each day that analysis is to be performed. A maintenance log shall be maintained for each particular instrument listing all repair or maintenance work performed. The log shall at a minimum list the date, time, nature of work and the name of the person performing the work.

AUTHORITY NOTE: Promulgated in accordance with R.S. 32:663.

HISTORICAL NOTE: Promulgated by the Department of Public Safety, Office of State Police, LR 26:2626 (November 2000).

§591. Reagents and Supplies

A. All drugs used for the preparation of reference drug standards shall be commercially purchased and shall be traceable to a certificate of analysis indicating that it has met the manufacturer's acceptable specifications for use. Purity of chemicals used in the analytical procedures shall be at least reagent grade as recognized by the American Chemical Society and water shall be distilled or de-ionized.

B. All instrument reagents shall be prepared in accordance with the manufacturer's instructions.

AUTHORITY NOTE: Promulgated in accordance with R.S. 32:663.

HISTORICAL NOTE: Promulgated by the Department of Public Safety, Office of State Police, LR 26:2626 (November 2000).

Chapter 6. Ignition Interlock Devices

§601. Introduction

A. General Background. In the 1992 Regular Session, the legislature addressed the use of ignition interlock devices on vehicles available to persons convicted of driving while intoxicated. In Act 352 of the 1992 session, the legislature found it to be economically and technically feasible to have an ignition interlock device installed on a vehicle in such a way as to keep the vehicle from being started if the operator's blood-alcohol content is measurable and exceeds a level set herein. In this act, enacting R.S. 32:378.2 and Act 982, enacting R.S. 15:306 and 15:307, the legislature authorized the courts to impose the use of such devices as a condition of probation after conviction of driving while intoxicated.

B. Purpose. The purpose of these rules is to promulgate a set of standards for the proper use of ignition interlock devices [R.S. 32:378.2(J)], a set of rules and regulations for the proper approval, installation and use of such devices [R.S. 15:307(C)], adopt a warning label to be affixed to said devices warning of criminal and civil penalties for misuse of such devices [R.S. 32:378.2(L) and R.S. 15:307(E)] and otherwise to declare substantive and procedural matters related to the functions and duties of the Department of Public Safety and Corrections under the act to which reference is made above, as well as under its general authority set forth in R.S. 40:1304.

C. Interpretation. These rules shall be interpreted so as to favor the safety of the public and the findings of the legislature that ignition interlock devices are designed to supplement other conditions of probation and punishment of those convicted of driving while intoxicated. Usual rules of statutory construction on gender, time and similar matters shall apply. References to statutory standards, regulations, governmental agencies, companies, organizations, officials and similar persons or things shall be read as referring to and including any amendments or successors thereto.

D. Conflicts. Rules or language apparently or actually in conflict shall be read in accordance with the interpretative favor required in Subsection C above with the view of maximizing the effectiveness of every provision. In the absence of a rule specifically addressing a particular matter, there shall be applied reasonable, just and equitable procedures and substantive decisions which are predictable from the spirit and intent of the legislative enactments and these rules. The basis for such equitable procedures and substantive decisions shall be articulated in writing and given effect in a manner which protects the safety of the public while recognizing the lack of a prior specific regulatory provision.

AUTHORITY NOTE: Promulgated in accordance with 57 FR, No. 67, 49 FR 48854, R.S. 32:378.2, R.S. 15:306, R.S. 15:307.

HISTORICAL NOTE: Promulgated by the Department of Public Safety and Corrections, Public Safety Services, Office of State Police, LR 19:780 (June 1993).

§603. Definitions

Approved Ignition Interlock Device—an ignition interlock device, as defined in R.S. 32:378.2(M) and R.S. 15:307(A), which meets or exceeds the standards of the National Highway Traffic Safety Administration as published in Volume 57, No. 67 of the *Federal Register* for Breath-Alcohol Ignition Interlock Devices, as extant or subsequently amended, or for which any exemptions from specific provisions of same have been granted by the department and is certified by the manufacturer and accepted by the department.

Approved Manufacturer—a manufacturer in good standing with the department who has furnished the necessary background information, demonstrated the necessary capability and who has received written approval of the department to supply approved ignition interlock devices in Louisiana. A manufacturer shall not be regarded as an approved manufacturer if approval has been withdrawn as to any matters concerning the supply of ignition interlock devices.

Court—the judge who sentences a person convicted of driving while intoxicated, and as a condition of probation, imposes the use of an ignition interlock device. This also includes the clerical and professional staff of such judge.

Department—the Department of Public Safety and Corrections, together with any of its agents or employees acting pursuant to the duties imposed by the statutes or other laws, as well as law enforcement authority, and under these regulations.

Manufacturer's File On Driver—a folder or other approved filing system containing copies of all documents required to be furnished by a probationary driver to the manufacturer, together with copies of all inspection reports, maintenance records, records of driver failure to meet with checkup appointments and deadlines, any reports to the court and all other documents related to the manufacturer's contacts with a probationary driver.

Manufacturer's Proof of Installation—a standard form, approved by the department, prepared and executed by the manufacturer or his designated representative who installs an approved ignition interlock device in a vehicle to be used in accordance with the provisions of the statutes and these regulations and submitted to the court or a probation officer designated by the court, within 30 days of the installation of the ignition interlock device.

N.H.T.S.A.—the federal agency known as the National Highway Traffic Safety Administration or any successor agency.

Probationary Driver—a Louisiana motorist who has been convicted of driving while intoxicated and given a probationary sentence which includes the requirement that he not operate a motor vehicle during his period of probation unless his vehicle is equipped with a functioning and approved ignition interlock device.

AUTHORITY NOTE: Promulgated in accordance with 57 FR, No. 67, 49 FR 48854, R.S. 32:378.2, R.S. 15:306, R.S. 15:307.

HISTORICAL NOTE: Promulgated by the Department of Public Safety and Corrections, Public Safety Services, Office of State Police, LR 19:781 (June 1993).

§605. Manufacturers

A. Each manufacturer seeking approval shall submit to the department the following documents and items of information:

1. a copy of the corporate charter, and if the manufacturer is a corporation chartered outside of Louisiana, a certificate from the Louisiana secretary of state authorizing the transacting of business in Louisiana;

2. a statement providing the names, titles, addresses and phone numbers of all officers of the corporation or personnel of the manufacturer who are charged with knowledge of the operations and business of the manufacturer in Louisiana, together with a job title and description for each such officer of personnel;

3. a copy of each policy of liability insurance in force covering product liability and operations of the manufacturer in Louisiana;

4. a copy of a letter of instruction to the insurance company issuing the policy of product liability coverage for the manufacturer instructing said company to notice the department for any lapse in coverage for said policy;

5. a security bond in the face amount of $1 million with a solvent surety company carrying at least an "A" rating with the commissioner of insurance for the state of Louisiana providing financial protection to any person or entity harmed by the malfunction of any approved ignition interlock device of the manufacturer which is used in Louisiana. This security bond may be utilized in lieu of the providing of a policy of product liability insurance referred to in Paragraph 3 above;

6. copies of all forms, documents, manuals or other written materials of the manufacturer utilized in the training of personnel or probationary drivers, in the administration of

its maintenance and inspection programs or marketing of its product, along with any audio/visual aids so utilized. The manufacturer shall not utilize any such materials not provided to the department or approved by the department in administering its program and/or its product in Louisiana. Required documentation shall include the manual for training of the installers, manuals for the servicing and maintenance of the ignition interlock device and manuals or other aids provided to probationary drivers.

AUTHORITY NOTE: Promulgated in accordance with 57 FR, No. 67, 49 FR 48854, R.S. 32:378.2, R.S. 15:306, R.S. 15:307.

HISTORICAL NOTE: Promulgated by the Department of Public Safety and Corrections, Public Safety Services, Office of State Police, LR 19:781 (June 1993).

§607. Regulation of Manufacturers

A. Good faith compliance with statutory regulation is required as a condition of continued good standing and approval of a manufacturer and his devices and operations. Neglect of good faith compliance, along with tardy, inaccurate or incomplete reports or record keeping, unavailability of key persons to receive communications from the department or failure to appear before the department for consultations, discussions or clarifications, may give rise to written administrative warnings. Although the intent of this procedure is to provide a less formal method of mutually exploring the respective positions of the department and the manufacturer, this procedure can be utilized in conjunction with more formal methods requiring minutes, etc.

B. Under the general authority of R.S. 15:307(C), the department may impose probationary conditions upon a manufacturer who fails to adhere to the requirements of law. Probations will be imposed in the following manner.

1. Written warning will be provided to a manufacturer at the address provided to the department regarding any neglect or noncompliance with the statutory regulations.

2. If after a reasonable delay the manufacturer fails to comply with the statutory regulations, the department may issue another warning to the manufacturer or impose written probationary conditions upon said manufacturer. The department may withdraw approval of a manufacturer for an indefinite period of time until at least the manufacturer corrects all statutory noncompliance. Any withdrawal of approval shall be in writing and shall state the reasons for said withdrawal and shall be mailed to the manufacturer at the address provided to the department by the manufacturer. The manufacturer shall then notify all installers of its equipment in Louisiana of the withdrawal of approval in writing. The withdrawal of approval may be only partial as to a particular part of the manufacturer's program in those situations where deficiencies of the manufacturer only affect limited activities, persons or situations and where there is no general neglect of all facets of the manufacturer's operation in Louisiana.

C. All written notices to the manufacturer by the department shall be by certified mail, return receipt requested. All such notices shall be sent to the permanent business address of the manufacturer provided to the department by the manufacturer. Ineffective delivery of such written notices shall be deemed the fault of the manufacturer provided that the item is properly addressed to the last-provided permanent business address of the manufacturer. In any event that notice is not actually made due to fault attributed to the manufacturer, notice will be presumed to have been properly given.

AUTHORITY NOTE: Promulgated in accordance with 57 FR, No. 67, 49 FR 48854, R.S. 32:378.2, R.S. 15:306, R.S. 15:307.

HISTORICAL NOTE: Promulgated by the Department of Public Safety and Corrections, Public Safety Services, Office of State Police, LR 19:781 (June 1993).

§609. Manufacturer's File on Driver

A. The manufacturer, or his designated representative in Louisiana, shall maintain in a file unique to each probationary driver legible copies of the following documents:

1. order of the sentencing court setting forth the terms and conditions of probation;

2. certificate of installation and acknowledgment by probationary driver;

3. ignition interlock monitoring reports;

4. if the probationary driver is utilizing a third-party owned vehicle, written permission from the owner of said vehicle to install the approved ignition interlock device;

5. any physical evidence of tampering or attempted tampering with the ignition interlock device discovered by the manufacturer or his designated representative.

AUTHORITY NOTE: Promulgated in accordance with 57 FR, No. 67, 49 FR 48854, R.S. 32:378.2, R.S. 15:306, R.S. 15:307.

HISTORICAL NOTE: Promulgated by the Department of Public Safety and Corrections, Public Safety Services, Office of State Police, LR 19:782 (June 1993).

§611. Driver's License and Proof of Insurance

A. Within seven days of the date the court imposed a probationary sentence upon a probationary driver, the probationary driver shall submit his current Louisiana driver's license to the department for the imprinting of the court's restriction on said license. The probationary driver shall also furnish to the department proof of liability insurance coverage pursuant to R.S. 32:871 et seq. The department shall charge the probationary driver the sum of $5.50 as a handling fee for the above services.

AUTHORITY NOTE: Promulgated in accordance with 57 FR, No. 67, 49 FR 48854, R.S. 32:378.2, R.S. 15:306, R.S. 15:307.

HISTORICAL NOTE: Promulgated by the Department of Public Safety and Corrections, Public Safety Services, Office of State Police, LR 19:782 (June 1993).

§613. Ignition Interlock Standards

A. Any breath-alcohol ignition interlock device submitted to the department for approval as an approved ignition interlock device shall be accompanied by the certificate of an independent testing laboratory approved by the Applied Technology Division of the Office of State

Police indicating that the device meets or exceeds the standards of the National Highway Traffic Safety Administration for such devices as published in Volume 57, No. 67 of the *Federal Register*, as currently extant or subsequently amended, or for which any exemptions from specific provisions of same have been granted by the department. A complete and certified copy of the testing protocol and the results thereof of the independent testing laboratory shall also accompany any breath-alcohol ignition interlock device submitted for approval.

B. In order to obtain approval of the department as an approved ignition interlock device, the manufacturer shall amply demonstrate that said unit meets or exceeds the above federal standards and fulfills the statutory requirements as to:

1. safe operation of the vehicle in which the unit is installed;

2. lack of interference with normal use of the vehicle;

3. protection against compromise or circumvention and preservation of evidence of such activity;

4. resistance to tampering;

5. ability to work reliably and accurately in an unsupervised environment;

6. ability to initiate a "restart" of the vehicle's ignition within one minute after the ignition has been turned off without requiring another breath-alcohol analysis;

7. measurement of a person's breath-alcohol concentration by delivery of a deep lung sample directly into the device;

8. disablement of the ignition system of the vehicle if the breath-alcohol concentration of the sample introduced into the device exceeds 0.03 grams of alcohol per 210 liters of breath;

9. disablement of the ignition system of the vehicle if the ignition interlock device has not been calibrated and serviced within a period of 67 days subsequent to its installation or last calibration or inspection, whichever is sooner;

10. recordation of each time the vehicle is started, the time of each start, how long the vehicle was operated and any instances of tampering or attempted tampering with the unit;

11. visibly indicate to the user and any qualified person:

a. the unit is on;

b. the unit has enabled the ignition system of the vehicle in which it is installed;

c. the unit is in need of service or calibration;

d. failure of the BAC threshold and the reading obtained by the unit on the breath sample introduced;

e. any other indication required by the department. The unit may augment visible signals or indications with audible ones;

f. in addition to the above standards, the department may require the unit submitted for approval to meet or exceed other requirements deemed necessary to insure the safety of the public or mandated by the above-specified federal BAIID regulations.

C. The manufacturer shall also supply for each approved unit sent to Louisiana for installation a sufficient supply of warning labels, one of which shall be affixed to each unit at all times it is installed which shall not be less than 1/2 inch in height by 3 inches in length and carry the following language:

> "WARNING! ANY ACTUAL OR ATTEMPTED TAMPERING OR CIRCUMVENTION OF THIS DEVICE CAN SUBJECT YOU TO CRIMINAL AND CIVIL LIABILITY."

1. The manufacturer shall also supply to all authorized installers of its approved ignition interlock devices a sufficient supply of self-adhesive labels, one of which shall be affixed to the rear of each vehicle in which an approved interlock device is installed at a level not lower than that of the license plate on each vehicle and visible in daylight at a range of not less than 50 feet, triangular in shape and measuring 3 1/2 inches on each side, white in color, with red letters indicating "I.I.D." The manufacturer shall submit to the department samples of all such required labels at the time of submission of the ignition interlock device for approval.

AUTHORITY NOTE: Promulgated in accordance with 57 FR, No. 67, 49 FR 48854, R.S. 32:378.2, R.S. 15:306, R.S. 15:307.

HISTORICAL NOTE: Promulgated by the Department of Public Safety and Corrections, Public Safety Services, Office of State Police, LR 19:782 (June 1993).

§615. Installation and Inspection

A. Pursuant to the requirements of R.S. 32:378.2(H) and R.S. 15:306(C), all approved ignition interlock devices installed shall be monitored directly by trained technicians at least every 67 days, or at such other interval required by the court. The direct monitoring by trained technicians shall include on site physical inspection of the device, the vehicle, and the wiring between the two to determine if there has been an attempted tampering and/or circumvention of the device. Any physical signs of tampering and/or circumvention shall be photographed and documented in writing by the manufacturer or his designated representative. Evidence of tampering/circumvention shall be reported by the manufacturer or his representative to the department and to the appropriate court within 48 hours of detection. All data downloaded from the device evidencing the driver's violation of state law, the department's regulations, or the appropriate court's orders shall be reported by the manufacturer to the appropriate court and to the department within 14 days of discovery.

B. Monitoring shall also include physical re-calibration of the device and downloading of all events contained in the

device's memory. These events shall be printed in a summary fashion and maintained in the applicable probationary driver's file.

C. The manufacturer may allow the devices to lock out the probationary driver and may terminate monitoring in the event of the driver's failure to pay monitoring fees.

AUTHORITY NOTE: Promulgated in accordance with 57 FR, No. 67, 49 FR 48854, R.S. 15:306, R.S. 15:307.
HISTORICAL NOTE: Promulgated by the Department of Public Safety and Corrections, Public Safety Services, Office of State Police, LR 19:783 (June 1993), amended by the Department of Public Safety and Corrections, Office of State Police, LR 31:938 (April 2005).

§617. Notice of Probation Revocation

A. The sentencing court shall supply to the department notice of any revocation or modification of the probation of any probationary driver. Notice of same shall be sent to the Department of Public Safety and Corrections, Office of Motor Vehicles, Legal Compliance Section, Box 64886, Baton Rouge, LA 70896.

AUTHORITY NOTE: Promulgated in accordance with 57 FR, No. 67, 49 FR 48854, R.S. 32:378.2, R.S. 15:306, R.S. 15:307.
HISTORICAL NOTE: Promulgated by the Department of Public Safety and Corrections, Public Safety Services, Office of State Police, LR 19:783 (June 1993).

Chapter 7. Environmental Emergency Response Training Program

§701. Authority

A. Section 705 of these regulations governing the Environmental Emergency Response Training Course is established by the Department of Public Safety as authorized by Act 361 of the Regular Session of the Legislature 1983.

B. These regulations may be cited as the Emergency Response Course.

AUTHORITY NOTE: Promulgated in accordance with Act 361 of the 1983 Louisiana Legislature.
HISTORICAL NOTE: Promulgated by the Department of Public Safety and Corrections, Office of State Police, LR 10:918 (November 1984).

§703. Definitions

A. For the purposes of these regulations the words defined in this Section have the following meaning, unless the context clearly indicates otherwise.

Act—Act 361 of 1983.

DEQ—Department of Environmental Quality.

DPS—Department of Public Safety.

Environmental Emergencies—an insult to the order of nature caused by the intentional or unintentional introduction of any substance regulated by state law, where said introduction to the natural order would cause undue public alarm.

SDEQ—Secretary, Department of Environmental Quality.

SDPS—Secretary, Department of Public Safety.

State Police Training Academy—the course of instruction of which completion is required to be employed as a state trooper.

Training—Environmental Emergency Response Training Program.

AUTHORITY NOTE: Promulgated in accordance with Act 361 of the 1983 Louisiana Legislature.
HISTORICAL NOTE: Promulgated by the Department of Public Safety and Corrections, Office of State Police, LR 10:918 (November 1984).

§705. Staff and Organization

A. The secretary, Department of Public Safety is hereby authorized to appoint one training coordinator, for the purpose of securing, monitoring, or directing training which corresponds to the responsibilities of DPS in relation to environmental emergencies. As provided for in this Part, the DPS training coordinator may also secure, monitor or direct such technical training as may be required to facilitate Environmental Emergency Response Training.

B. The DPS training coordinator shall be appointed from the ranks of sworn commissioned officers of the Office of State Police who are graduates of the State Police Training Academy. The training coordinator shall report to the commander of the State Police Hazardous Substance Control Section, who may assign to the DPS training coordinator additional duties and responsibilities as required to perform the overall duties of a member of the Office of State Police.

C. The secretary, Department of Environmental Quality is hereby authorized to appoint one training coordinator for the purpose of securing, monitoring, or directing training which corresponds to the responsibilities of DNR in relation to environmental emergencies. As provided for in this Part, the DNR training coordinator may also secure, monitor or direct, such technical training as may be required to facilitate Environmental Emergency Response Training.

D. The DNR training coordinator shall report to the assistant secretary, Office of Environmental Affairs, who may assign to the DNR training coordinator additional duties and responsibilities as may be required to perform the overall duties of a member of the Office of Environmental Affairs.

E. The secretary, Department of Public Safety shall be authorized to appoint one managing secretary in order to facilitate the management of the clerical functions generated by the two training coordinators.

F. The secretary, DPS shall seek authorization, pursuant to this Section, from the Civil Service Commission to increase the authorized compliment of the Office of State Police by two positions. One position being used for purpose of employing the DPS training coordinator, and the other position being used for the purpose of employing the managing secretary.

G. The secretary, DEQ shall seek authorization, pursuant to this Section, from the Civil Service Commission to

increase the authorized compliment of the Office of Environmental Affairs by one position, it being used for the purposes of employing the DNR training coordinator.

H. The secretary, DEQ shall be authorized to fund the aforementioned positions pursuant to Act 361 of the Regular Session of the Legislature 1983 [R.S. 30:1079(E)].

AUTHORITY NOTE: Promulgated in accordance with Act 361 of the 1983 Louisiana Legislature.
HISTORICAL NOTE: Promulgated by the Department of Public Safety and Corrections, Office of State Police, LR 10:918 (November 1984).

§707. Eligibility

A. As provided for in this Part, (§709, Curriculum), any employee of the state of Louisiana, or any employee of any political subdivision thereof, shall be eligible to attend training, provided that priority be given in the attendance of peace officers, fire fighters, civil defense planners, hospital personnel, and those employees who, by nature of their official duties, protect the environment of Louisiana.

B. Members of private industry may be allowed to attend training provided they be assessed a reasonable fee as determined by the SDPS. Such fee to be used to reimburse the emergency response fund.

C. Any person employed by the United States Government or its allies, or any person employed by any other state or local government outside Louisiana, who by nature of their of official duties, protect their respective environments, may be given consideration to attend, provided there be space available.

AUTHORITY NOTE: Promulgated in accordance with Act 361 of the 1983 Louisiana Legislature.
HISTORICAL NOTE: Promulgated by the Department of Public Safety and Corrections, Office of State Police, LR 10:918 (November 1984).

§709. Curriculum

A. Except as otherwise provided for in this Part, the secretaries of DPS and DEQ shall jointly determine course length and content.

B. Working through the assistant secretary for the Office of Emergency Preparedness, the secretaries of DPS and DEQ may seek such assistance as is available from the Federal Emergency Management Agency.

AUTHORITY NOTE: Promulgated in accordance with Act 361 of the 1983 Louisiana Legislature.
HISTORICAL NOTE: Promulgated by the Department of Public Safety and Corrections, Office of State Police, LR 10:919 (November 1984).

§711. Administration

A. Training conducted shall be a minimum of three sessions annually (fiscal year), each session containing no less than 40 hours of instruction. However, nothing herein contained shall be so construed as to prohibit additional training sessions of less than 40 hours duration, based on availability of funds and instructors.

B. Whenever practical, students (the number and organizational background of whom shall be determined jointly by the two training coordinators) shall be housed in the State Police Training Academy. Whenever the aforementioned housing is unavailable, however, shall not exceed the current allowable per day in-state lodging expense, as ordered by the division of administration.

C. The SDEQ is not authorized to reimburse attendees nor their respective employing agencies for costs incurred for salary (including overtime) by the attendees of their employing agency.

D. The SDEQ is hereby authorized expenditures for the sake and purpose of providing instruction for the training, including honoraria, and instructor's per diem, and travel and per diem incurred by the training coordinators and managing secretary, necessitated by the nature of training and curriculum. The SDEQ is further authorized expenditures necessary for the acquisition of training aids and supplies, and whatever other implements as may be required from time-to-time to insure an adequate level of instruction.

AUTHORITY NOTE: Promulgated in accordance with Act 361 of the 1983 Louisiana Legislature.
HISTORICAL NOTE: Promulgated by the Department of Public Safety and Corrections, Office of State Police, LR 10:919 (November 1984).

Chapter 8. Accident Reports

§801. Costs of Accident Reports

A. Pursuant to R.S. 32:398(F) the following fee scale shall be used for the sale of accident reports.

1. For a certified, paper copy or electronic copy of an accident report not exceeding two pages, the cost shall be $1.50.

2. For a certified, paper copy of an accident report exceeding two pages, the cost shall be $16.50.

3. For an electronic copy of an accident report exceeding two pages, the cost shall be $11.50.

B. Accident reports are available for purchase online at www.lsp.org or at each local Troop office.

AUTHORITY NOTE: Promulgated in accordance with R.S. 32:398(F).
HISTORICAL NOTE: Promulgated by the Department of Public Safety and Corrections, Office of State Police, LR 45:582 (April 2019), repromulgated LR 45:912 (July 2019).

§802. Third Party Convenience Fee

A. Notice is hereby given that pursuant to R.S. 49:316.1(A)(2), the following third party convenience fee(s) shall apply to the purchase of an accident report:

1. For the purchase of an accident report by credit cards and similar types, the third party convenience fee shall be $2.50 + 2.5 percent.

2. For the purchase of an accident report by ACH payments and similar types, the third party convenience fee shall be $2.50 + $1.00.

AUTHORITY NOTE: Promulgated in accordance with R.S. 32:398(F).

HISTORICAL NOTE: Promulgated by the Department of Public Safety and Corrections, Office of State Police, LR 45:582 (April 2019), repromulgated LR 45:912 (July 2019).

Chapter 9. Photographs

§901. Costs of Photographs Pertaining to Accident Reports

A. Pursuant to R.S. 32:398(G), the following fee scale shall be used for the sale of photographs pertaining to accident reports:

1. For a proof sheet that includes thumbnails of all photographs, the cost shall be $10 per sheet. Each sheet holds a maximum of 40 thumbnails.

2. For an individual photograph selected from the proof sheet, the cost shall be $15 per individual photograph. A CD containing digital copies of only the photograph(s) purchased will be included.

3. For an entire set of photographs (with or without purchasing the proof sheet), the cost shall be $10 per photograph. A CD containing digital copies of all photographs will be included.

4. For a replacement CD, the cost shall be $10 per CD.

B. Photographs are available for purchase online at lsp.org, via facsimile to 225-925-4401, or via U.S. mail to: Office of State Police, Photo Lab, D-3, P.O. Box 66614, Baton Rouge, LA 70896.

C. Photographs and CDs will be shipped within three to five business days after receiving payment.

AUTHORITY NOTE: Promulgated in accordance with R.S. 32:398(G).

HISTORICAL NOTE: Promulgated by the Department of Public Safety and Corrections, Office of State Police, LR 45:584 (April 2019).

Chapter 11. State Police Escort Fees

§1101. Distance/Fees

A. Notice is hereby given that the Louisiana Department of Public Safety, pursuant to R.S. 32:387(B)(4) as amended, has adopted the following fee scale for the use of state police vehicles as escorts to vehicles moving over the highways of this state under special permits.

Distance Traveled by Escort Vehicle Fee	
0-49 miles	$100
50-99 miles	$125
100-199 miles	$150
200-299 miles	$175
300 and over miles	$200

AUTHORITY NOTE: Promulgated in accordance with R.S. 32:387(B)(3).

HISTORICAL NOTE: Promulgated by the Department of Public Safety, Office of State Police, LR 9:15 (January 1983), amended by the Department of Public Safety and Corrections, Office of State Police, LR 44:347 (February 2018).

Chapter 13. Issuance of Concealed Handgun Permits

§1301. Applications and Permits

A. The rules contained herein are promulgated by the Concealed Handgun Permit Unit of the Department of Public Safety and Corrections, Office of State Police, in order to set forth the policies and procedures applicable to the issuance of concealed handgun permits to Louisiana citizens who qualify for such permits pursuant to R.S. 40:1379.1 and 40:1379.3; to provide statewide uniform standards for issuing permits to carry concealed handguns; and to maintain the health, welfare, and safety of the public. These considerations shall control the application and interpretation of these rules. Any subsequent restatement, repeal, or amendment of these rules shall be in accordance with the aforementioned considerations.

B. Applicability. The policies and procedures provided herein shall be applicable to all Louisiana citizens who are eligible for a statewide concealed handgun permit.

C. Duties and Responsibilities. Persons issued concealed handgun permits have the authority only to carry a concealed weapon and are regarded as private citizens in all matters of law with no special powers or authority accruing by virtue of the concealed handgun permit.

D. Application. Eligible persons shall be entitled to receive the concealed handgun permit, as set forth above; provided that all requirements of the superintendent of state police relating to application shall be satisfied. Applications shall be submitted in the manner prescribed by the superintendent of state police and will include the submission of such documents and materials establishing eligibility as the superintendent may deem necessary.

E. Suspension/Revocation. The superintendent of state police or his designee may suspend or revoke concealed handgun permits when conditions and/or circumstances are such that the holder of such permit can no longer show need or when the holder commits acts contrary to law or uses the permit for self aggrandizement or in an unreasonable and imprudent manner.

F. Arrest Record. If the applicant has an arrest record, he shall present with the application a certified copy from the clerk of court or district attorney of the parish or county in which the arrests were made which specifies the disposition on all charges. Arrest record shall include an arrest, summons, nolle prossed charges, dismissed charges, expunged charges, convictions which are set aside and any pardon.

AUTHORITY NOTE: Promulgated in accordance with R.S. 40:1379.1. 40:1379.3, 40:1381, and 40:1382.

HISTORICAL NOTE: Promulgated by the Department of Public Safety, Office of State Police, LR 1:495 (November 1975), amended by the Department of Public Safety and Corrections, Office of State Police, LR 22:845 (September 1996), LR 38:1279

(May 2012), repromulgated LR 38:1415 (June 2012), amended LR 43:671 (April 2017), LR 45:582 (April 2019).

§1303. Issuance of Special Officer's Commission

A. Purpose. The purpose of this regulation is to set forth the policies and procedures applicable to the issuance of special officer's commission to persons showing need for such commissions as required in accordance with the provisions of title 40, section 1379.1 of the *Louisiana Revised Statutes*.

B. Applicability. The policies and procedures provided herein shall be applicable to all officers, agents, and employees of agencies, boards and commissions of the state of Louisiana; of local government subdivisions; of private institutions or others who display a need for statewide police power and power to arrest, are bonded and meet other restrictions as required.

C. Duties and Responsibilities. Authorized persons commissioned as special officers shall have the direct authority to perform those activities specified on the special officer's commission card. However, when the holder of a special officer's commission is not performing those tasks specified on the commission card, he shall be regarded as a private citizen and his commission shall not be in effect.

D. Application. The superintendent of state police shall be authorized to issue, at his discretion, a special officer's commission from the Office of State Police. All requirements of the superintendent of state police relating to application shall be satisfied. Applications shall be submitted in the manner prescribed by the superintendent of state police and will include the submission of such documents and materials establishing eligibility as the superintendent may deem necessary.

E. Suspension/Revocation. The superintendent of state police may revoke or suspend special officer's commission when conditions and/or circumstances are such that the holder of a special commission can no longer show need or when the holder commits acts contrary to law or to the jurisdictional stipulations of the commission or through his action(s) or lack of action(s) brings discredit upon the state of Louisiana, its departments, agencies or commissions or its political subdivisions. Persons holding special officer's commissions are subject to the same statutory responsibilities and liabilities as are all other local and state law enforcement officers.

F. Termination. Special officer commissions will automatically expire one year from the date of issue or as otherwise provided by law.

G. Qualifications and Requirements. The following requirements shall be met before a special officer's commission will be issued. All applicants:

1. shall submit a letter which details the need for statewide police power and the power to arrest. If the applicant is employed and the nature of the employment is the basis for need of a special officer's commission, then, in addition to his letter, a detailed letter from the employer stating the need is necessary;

2. shall complete a detailed application and submit application along with the following documents:

a. complete fingerprint file which has been prepared by a law enforcement agency;

b. copy of birth certificate;

3. shall have completed the minimum hours of basic law enforcement training in accordance with the Council on Peace Officer Standards and Training, or possess related experience or ability equal to such training;

4. submit to and pass a comprehensive background investigation, said investigation to be conducted by the Louisiana State Police;

5. show proof of faithful service bond in the minimum amount of $10,000; and

6. if the applicant has an arrest record, he shall present a notarized statement from the clerk of court or the district attorney of the parish in which the arrests were made which specifies the disposition on all charges.

AUTHORITY NOTE: Promulgated in accordance with R.S. 40:1379.1, 40:1379.3, 40:1381, and 40:1382.

HISTORICAL NOTE: Promulgated by the Department of Public Safety, Office of State Police, LR 1:496 (November 1975), amended by the Department of Public Safety and Corrections, Office of State Police, LR 22:845 (September 1996), LR 38:1280 (May 2012), LR 43:671 (April 2017).

§1305. Definitions

A. For the purposes of these rules, the following words and phrases shall be defined as:

Addiction—the habitual use of alcoholic beverages or any controlled dangerous substance as defined in R.S. 40:961 and 40:964.

Applicant—a person who has completed and submitted an application to the department seeking a concealed handgun permit.

Application—the forms and schedules prescribed by the department upon which an applicant seeks a permit or the renewal thereof. Application also includes information, disclosure statements, releases, certificates or any other form required by the department in the application process.

Citizen—any person legally residing in Louisiana immediately preceding the filing of an application for a concealed handgun permit.

Concealed Handgun—any handgun as defined in R.S. 40:1379.3(J)(3) which is carried on a person in such a manner as to hide or obscure the handgun from plain view.

Department—Louisiana Department of Public Safety and Corrections, Office of State Police.

Deputy Secretary—the deputy secretary of the Louisiana Department of Public Safety and Corrections who serves as the superintendent of the Office of State Police.

Fixed-Case Marking Projectile—any non-lethal simulated ammunition commonly referred to as ‘simunition.’

Fugitive from Justice—a person who flees, evades, or escapes from any jurisdiction to avoid arrest, prosecution, or imprisonment for any criminal offense, which shall include outstanding traffic attachments or warrants, or to avoid giving testimony in any criminal proceeding.

Illegal Alien—any person without legal authority to enter or remain in the United States and who is not legally residing within the United States or any territory or possession of the United States.

Law Enforcement Officer—any individual who is authorized by law to engage in or supervise the prevention, detection, investigation, or prosecution of, or the incarceration of any person for, any violation of law, and has statutory powers of arrest. For the purposes of this Section, this definition shall apply to the term "peace officer" and "police officer."

Machine Gun—any firearm which shoots or is designed to shoot more than one round without reloading and by a single function of the trigger.

N.R.A.—National Rifle Association.

Permit—the authorization issued by the deputy secretary of the Louisiana Department of Public Safety and Corrections pursuant to R.S. 40:1379.3 and these rules, which shall be valid for five years from the date of issuance for a five-year permittee, or for the lifetime of a permit holder for a lifetime permittee, unless revoked, suspended, or otherwise invalidated, and shall contain a permit number, date of expiration, and the name, address, date of birth, physical description, and photograph of the permittee.

Permittee—an individual who meets the qualifications as described in R.S. 40:1379.3 and these rules and to whom a concealed handgun permit has been issued.

Pistol—a handgun that has a short barrel and can be held, aimed, and fired with one hand and is capable of only firing a single round each time the trigger is pulled, which includes semi-automatic handguns.

P.O.S.T—Council on Peace Officer Standards and Training.

Resident—a person who is legally domiciled in Louisiana.

Revolver—a pistol that has a rotating cylinder containing a number of firing chambers. The action of the trigger or hammer will line up a chamber with the barrel and firing pin.

Veteran—any honorably discharged veteran of the Armed Forces of the United States including reserved components of the Armed Forces, the Army National Guard, the U.S. Public Health Service Commissioned Corps, and any other category of persons designated by the president in time of war or emergency.

AUTHORITY NOTE: Promulgated in accordance with R.S. 40:1379.1, 40:1379.3, 40:1381, and 40:1382.

HISTORICAL NOTE: Promulgated by the Department of Public Safety and Corrections, Office of State Police, LR 22:846 (September 1996), amended LR 28:1483 (June 2002), LR 38:1280 (May 2012), LR 43:672 (April 2017), LR 45:583 (April 2019).

§1307. Applications and Permits

A. Application materials may be obtained by accessing the Louisiana State Police website at www.lsp.org.

B. Initial Applications

1. All applications for a permit shall be submitted online or on forms provided by the department and mailed to:

Louisiana State Police
Concealed Handgun Permit Unit
P. O. Box 66375
Baton Rouge, LA 70896

2. Applicants shall provide all additional information requested by the department within 10 business days of receipt of the request, unless an extension is granted by the department. If any applicant fails to provide all additional information requested by the department, the application shall be considered incomplete and shall be denied.

3. All applicants shall submit with their application two complete, legible, and classifiable FBI applicant fingerprint cards taken by a person employed by a law enforcement agency who is appropriately trained in recording fingerprints.

4.a. For purpose of proof that the applicant is a resident of the state of Louisiana prior to his application for a permit, the applicant shall submit with his application a photocopy of his valid Louisiana driver's license or valid Louisiana identification card.

i. An applicant shall have a Louisiana driver's license or identification card.

ii. In the event the applicant's Louisiana driver's license or Louisiana identification card has been issued within six months of application, proof of residency shall be established by any one of the following documents:

(a). United States passport;

(b). Louisiana voter registration card;

(c). any other documentation, which may adequately satisfy proof of compliance with the qualifications for residency.

b. For purposes of proof of residency, a business address or post office box shall not suffice.

c. Applicants who claim Louisiana as their domiciliary state and are on U.S. military duty in another state shall submit a copy of their orders detailing them to such duty station, along with a copy of their military identification card. Applicants who do not claim Louisiana as their domiciliary state and are on U.S. military duty in this state shall submit a copy of their orders detailing them on permanent status to a duty station within this state. In addition, those applicants shall possess either a valid Louisiana driver's license or valid Louisiana identification card.

d. An applicant who is attending school in another state shall submit a copy of his school registration form and fee bill for each semester during the permit period that is applicable.

5. For purposes of proof that the applicant is at least 21 years of age, a photocopy of his valid Louisiana driver's license or valid Louisiana identification card which contains the applicant's date of birth shall suffice.

6. All application forms are to contain a properly notarized oath wherein the applicant swears that:

a. the information contained therein is true and correct;

b. the applicant has read the applicable law and these rules, and any other informational materials supplied by the department that pertain to concealed handgun permits;

c. the applicant agrees to comply with these rules and the law; and

d. the applicant understands that any omission or falsification of any information required in the application may subject the applicant to criminal penalties.

7. All applications shall contain the permittee's home and daytime telephone number and a permanent mailing address for receipt of correspondence and service of documents by the department.

8. All applications submitted to the department shall contain proof of competency with a handgun in accordance with §1311.

9. All applications shall include a properly executed affidavit, provided by the department, whereby the applicant agrees in writing to hold harmless and indemnify the department, the state or any peace officer for any and all liability arising out of the issuance or use of the concealed handgun permit.

10. Incomplete applications, including failure to pay fees and failure to disclose an arrest or criminal offense, shall result in the rejection or denial of a permit application.

11. The applicant or permittee shall notify the department, in writing, of any change of address, name, phone number, or other information required in the application, including the effective date of the change, within 30 days of the effective date of the change. All notifications shall be submitted to the Concealed Handgun Permit Unit via certified mail, return receipt requested or via the unit’s public website.

12. Any false statement or improper notarization contained in any report, disclosure, application, permit form, or any other document required by the department shall be a violation of these rules and shall be cause for denial, suspension, or revocation of the permit.

13. All paper applications shall be submitted with a certified check, money order or any other means of payment as approved by the department for the application or renewal fee as provided in §1307.B.14. An application is not complete unless it is submitted with the appropriate fee, is signed by the applicant, and contains all information required by the department.

14. All applicants shall submit with the application a non-refundable fee in the form of a certified check, money order or any other means of payment as approved by the department. The applicable fees are as follows:

a. for a five-year concealed handgun permit, the fee shall be $125;

b. for a lifetime concealed handgun permit, the fee shall be $500;

c. the above fees shall be reduced by one-half if the applicant is 65 years of age or older or if the applicant qualifies for the military discount as set forth in R.S. 40:1379.3(W)(1) on the date the application is received by the department;

d. an applicant who is a veteran shall be exempt from all fees associated with the five-year concealed handgun permit or the lifetime concealed handgun permit;

e. any applicant who has not continuously resided within the state of Louisiana for the 15 years preceding the submission of the initial application shall enclose an additional non-refundable $50 fee. This additional fee shall not be reduced for applicants 65 years of age or older, or if the applicant qualifies for the military discount as set forth in R.S. 40:1379.3(W)(1).

15. When an application is submitted online, any document otherwise required to be subscribed or acknowledged before a notary public shall include an online certification in accordance with R.S. 9:2621 in lieu of the notarized sworn subscription or acknowledgement.

C. Qualifications to Receive a Permit. To qualify for a concealed handgun permit, a citizen shall:

1. not be ineligible to possess a firearm under 18 U.S.C. 922(g); and

2. meet the requirements set forth in R.S. 40:1379.3 et seq.

D. Renewal of Permits

1. To renew a concealed handgun permit, a permittee shall file a renewal application no more than 120 days prior to the expiration of the permit and no later than the sixtieth day after expiration. Renewal applications submitted after the sixtieth day from expiration will not be accepted and the permittee shall complete a new original application with all documentation required for an original application.

2.a. A renewal application shall be considered filed with the department when the department receives the application and the fees are processed. The applicable renewal fees are as follows:

i. for a five-year concealed handgun permit, the fee shall be $125;

ii. the above fees shall be reduced by one-half if the applicant is 65 years of age or older, or qualifies for the military discount on the date the application is received by the department.

3. An incomplete renewal application shall be denied or rejected by the department for failure to provide requested documents or appropriate fees. Proof of residency shall conform to B.4.a-B.4.a.ii.(c) of this Section.

4. Each permittee applying for a renewal of his permit shall complete additional educational training pursuant to requirements of §1311 within one year prior to submitting a renewal application and submit proof of training with the application.

5. Fingerprint cards shall be required upon renewal and/or submission of training for a lifetime concealed handgun permit if the Department of Public Safety determines that there is no Concealed Handgun Permit fingerprint card submission on file. Failure to comply shall be grounds for a denial or suspension.

AUTHORITY NOTE: Promulgated in accordance with R.S. 40:1379.1, 40:1379.3, 40:1381, and 40:1382.

HISTORICAL NOTE: Promulgated by the Department of Public Safety and Corrections, Office of State Police, LR 22:846 (September 1996), amended LR 28:1483 (June 2002), LR 38:1281 (May 2012), repromulgated LR 38:1415 (June 2012), amended LR 43:673 (April 2017), LR 45:583 (April 2019), LR 46:1232 (September 2020).

§1309. Permits

A. In accordance with R.S. 40:1379.3 and LAC 55:I:1301 et seq., a concealed handgun permit shall be issued as a prerequisite to carry a concealed handgun.

B. A permit shall grant statewide authority to a permittee to carry and conceal on his person, in the manner prescribed by law and these rules, a handgun as defined by R.S. 40:1379.3(J)(1). A permit shall grant a permittee only the authority to carry a concealed handgun as a private citizen and grants no special authority to any citizen issued the permit.

C. An applicant for a concealed handgun permit accepts the risk of adverse public notice, embarrassment, criticism or other action or loss that may result from action with respect to an application and expressly waives any claim for damages as a result thereof, except relating to willful misconduct by the department.

D. Failure to meet and maintain the qualification requirements as required by law and these rules, shall result in the denial, suspension, or revocation of a concealed handgun permit.

E. Any permit issued pursuant hereto shall automatically become invalid for any of the following reasons:

1. the permit is altered in any manner;

2. the permit is lost or stolen;

3. the permittee is carrying it while under the influence of alcoholic beverages or a controlled dangerous substance; or

4. the permittee ceases to reside within this state.

F. Any permit issued by the deputy secretary of the Department of Public Safety and Corrections shall be deemed to be the property of the department and shall be surrendered and returned to the department upon suspension, revocation or expiration, or when the permittee ceases to reside in the state.

G. The following shall be mandatory grounds for revocation of a permit by the deputy secretary:

1. The permittee fails to satisfy or maintain any one of the qualification requirements enumerated in the law or these rules.

2. The permittee violates the provisions of R.S. 40:1379.3(I) or R.S. 40:1382.

H. An otherwise lawful permit shall be considered automatically suspended and not valid while the permittee is under the influence of alcoholic beverages or a controlled dangerous substance. For purposes of these rules and the applicable law, a permittee shall be considered under the influence as evidenced by a blood alcohol reading of 0.05 grams percent or greater by weight of alcohol in the blood, or when a blood test or urine test shows any confirmed presence of a controlled dangerous substance as defined in R.S. 40:961 and 964. If permittee is arrested for DWI (R.S. 14:98 provisions), the suspension of the concealed handgun permit is indefinite until the DWI is formally resolved with a dismissal, nolle prose, or if the permittee is found not guilty of DWI, or until admission into and completion of a district attorney's pre-trial diversion program. Permittee shall provide proof of official disposition by a certified copy from the court or the district attorney's Office.

I. For any arrest whereby the crime is punishable by a penalty which is disqualifying, the permit shall become invalid by suspension and remain invalid until the official judicial disposition of the charge. The concealed handgun permit shall be returned to the Concealed Handgun Permit Office at Louisiana State Police within 15 days after notification from the Concealed Handgun Permit Office.

J. The deputy secretary shall automatically suspend a permit for six months if a permittee fails to comply with the provisions of R.S. 40:1379.3(I)(2).

AUTHORITY NOTE: Promulgated in accordance with R.S. 40:1379.1, 40:1379.3, 40:1381, and 40:1382.

HISTORICAL NOTE: Promulgated by the Department of Public Safety and Corrections, Office of State Police, LR 22:848 (September 1996), amended LR 38:1282 (May 2012), LR 45:583 (April 2019), repromulgated LR 45:680 (May 2019).

§1311. Handgun Training Requirements

A. Upon initial application to the department for a permit, all applicants shall demonstrate competence with a handgun by any one of the following:

1. completion of any Department of Public Safety and Corrections approved firearms safety or training course which shall include at least a minimum of nine hours of instruction as detailed below:

a. one hour of instruction on handgun nomenclature and safe handling procedures of a revolver and semi-automatic pistol;

b. one hour of instruction on ammunition knowledge and fundamentals of pistol shooting;

c. one hour of instruction on handgun shooting positions;

d. three hours of instruction on the use of deadly force and conflict resolution which shall include a review of R.S. 14:18 through 14:22 and which may include a review of any other laws relating to the use of deadly force;

e. one hour of instruction on child access prevention; and

f. two hours of actual live range fire and proper handgun cleaning procedures:

i. live range fire shall include at a minimum 12 rounds each at 6 feet, 10 feet and 15 feet for a total of 36 rounds;

ii. each applicant or permittee shall perform at least one safe reload of the handgun at each distance;

iii. each applicant or permittee shall score 100 percent hits within the silhouette portion of an N.R.A. B-27 type silhouette target with at least 36 rounds;

2. completion of the N.R.A. Personal Protection In The Home Course or Personal Protection Outside the Home Course including instruction in child access prevention conducted by an N.R.A. certified instructor;

3. completion of the N.R.A. Basic Pistol Shooting course including instruction in child access prevention conducted by a N.R.A. certified instructor;

4. possession of a current valid license or permit to carry a concealed handgun issued by a parish law enforcement officer;

5. completion of a law enforcement training academy program certified by P.O.S.T.; or

6. proof of completion of small arms training while serving with the armed forces of The United States of America as described in R.S. 40:1379.3(D)(1) dated within 60 months of date of the application;

7. for personnel on active duty or serving in one of the National Guard or reserve components of the armed forces, possession of a certification of completion of basic training with service record evidence of having successfully completed small arms training and qualification;

8. for personnel released or retired from active duty or the National Guard or reserve components of the armed forces for more than 60 months, possession of proof indicating combat service and an "honorable discharge" or "general discharge under honorable conditions" as evidenced by a Department of Defense Form 214 (DD-214) and completion of the following.

a. A three-hour course of instruction on the use of deadly force and conflict resolution which shall include a review of R.S. 14:18-22 and which may include a review of any other laws relating to the use of deadly force within the preceding 60 months.

b. A one-hour course of instruction on child access prevention within the preceding 60 months.

B. Upon renewal application to the concealed handgun permit unit for a permit, all applicants shall demonstrate competence with a handgun by attending a course taught by a department approved instructor consisting of the following:

1. instruction on handgun nomenclature and safe handling procedures for a revolver and a semi-automatic pistol;

2. instruction on ammunition knowledge and fundamentals of pistol shooting;

3. instruction on handgun shooting positions;

4. instruction on the use of deadly force and conflict resolution which shall include a review of R.S. 14:18-14:22 and which may include a review of any other laws relating to use of deadly force;

5. instruction on child access prevention; and

6. actual live range fire and proper handgun cleaning procedures:

a. live range fire shall include at a minimum 12 rounds each at 6 feet, 10 feet and 15 feet for a total of 36 rounds;

b. each applicant or permittee shall perform at least one safe reload of the handgun at each distance;

c. each applicant or permittee shall score 100 percent hits within the silhouette portion of an N.R.A. B-27 type silhouette target with at least 36 rounds.

C. No certification or completion from any firearms training course or class available to the public offered by a law enforcement agency, college, or private or public institution or organization or firearm training school shall be accepted unless said course received prior approval from the department in accordance with R.S. 40:1379.3(D)(1)(b), (c), and (e).

1. The provider of any course offered for the purpose of certification to obtain a concealed handgun permit shall submit a detailed course syllabus and any course materials to the department in order for the department to evaluate said course for approval pursuant to R.S. 40:1379.3(D)(1)(b), (c), and (e). If the provider fails to provide training in a manner consistent with the approved course syllabus and materials, the department shall revoke the provider's approval to conduct said courses.

2. The course syllabus shall include the name and address of the instructors and a certified true copy of the instructors' N.R.A. or P.O.S.T. instructor certification.

D. Any teaching or training required under this Part shall be conducted by a current NRA-certified or P.O.S.T.-certified instructor who has registered his name and certification with the department. In order to become registered and maintain that registration with the department an instructor shall:

1. submit a completed copy of DPSSP Form 6702 instructor information form;

2. submit a course syllabus that includes the curriculum described in LAC 55:I.1311.A and LAC 55:I.1307.D;

3. keep up to date his name, address, phone number, an e-mail address, and instructor certificates (on a yearly basis);

4. submit a contact number that may be released to applicants to schedule courses. The listing of an e-mail address is optional. In the event that the instructor's contact information is not valid or certification has expired, the instructor shall be removed from the department's approved instructor list.

AUTHORITY NOTE: Promulgated in accordance with R.S. 40:1379.1, 40:1379.3, 40:1381, and 40:1382.

HISTORICAL NOTE: Promulgated by the Department of Public Safety and Corrections, Office of State Police, LR 22:849 (September 1996), amended LR 28:1484 (June 2002), LR 38:1283 (May 2012), amended LR 43:673 (April 2017).

§1313. Code of Conduct of Permittees

A. General Provisions

1. All permittees shall comply with all applicable federal and state laws and regulations.

2. Any violation of R.S. 40:1379.3 or 40:1382 shall also constitute a violation of these rules.

3. Each permittee shall meet and maintain all qualifications necessary to possess a concealed handgun permit.

B. Duties and Responsibilities of the Permittee

1. A permittee armed with a handgun shall notify any police officer who approaches the permittee in an official manner or with an identified official purpose that he has a handgun on his person, submit to a pat down, and allow the officer to temporarily disarm him. Failure to comply with this provision shall result in a six-month automatic suspension of the permit.

2. A permittee is prohibited from carrying a concealed handgun on his person while under the influence of alcoholic beverages or a controlled dangerous substance as defined in R.S. 40:961 and R.S. 40:964. For purposes of these rules, a permittee shall be considered under the influence as evidenced by a blood alcohol reading of 0.05 grams percent or greater by weight of alcohol in the blood, or when a blood test or urine test shows any confirmed presence of a controlled dangerous substance as defined in R.S. 40:961 and 40:964. When a law enforcement officer is made aware that a permittee is carrying a concealed handgun and the officer has reasonable grounds to believe that the permittee is under the influence of either alcoholic beverages or a controlled dangerous substance as defined in R.S. 40:961 and 40:964, the law enforcement officer may take temporary possession of the handgun and require the permittee to submit to a department-certified chemical test. The law enforcement agency by which such officer is employed shall designate which of the aforesaid tests shall be administered. Failure of the permittee to comply with the provisions of this Section shall result in a six-month automatic suspension of the concealed handgun permit.

3. Each permittee shall notify the department in writing of any change of address, name, phone number, or other information required in any application, including the effective date of the change, within 30 days of the effective date of the change. All notifications shall be submitted to the Concealed Handgun Permit Unit via certified mail, return receipt requested or via the unit's public website. Failure to comply with this provision may result in suspension or revocation of the permit.

4. A permittee shall notify the department of any misdemeanor or felony arrest or issuance of any summons other than a minor traffic violation, but including all arrests for operating a vehicle as defined in R.S. 14:98(A)(1) while under the influence of alcohol or other substances, in this state or any other jurisdiction, within 15 days of the arrest or issuance of the summons. Notice shall be sent via certified mail, return receipt requested to the department's designee responsible for the issuance of concealed handgun permits and shall include the date of arrest or summons, the arresting or issuing agency, jurisdiction in which the arrest occurred, the specific offense charged, whether the offense is classified as a felony or misdemeanor, the results of any chemical test which may have been administered in conjunction with the arrest or summons, a copy of any citation or summons issued, and any other pertinent information regarding the arrest or summons. Failure to notify the department in accordance with this Section shall result in a 90-day suspension of the permit.

5. When a permittee ceases to reside within this state, the permit automatically becomes invalid and the permittee shall return the concealed handgun permit to the department within five business days from the date he ceases to reside within this state. Upon receipt of the permit, the permit status shall be changed to "canceled." A new application shall be completed if the permittee resumes his resident status.

6. A permittee shall immediately return the concealed handgun permit to the department upon automatic suspension or revocation of the permit. If the permit is under suspension, failure to immediately return the permit to the department may be grounds for revocation.

7. A permittee shall immediately inform the department in writing of any handgun related accident, discharge, incident, injury, or death involving any permittee. Failure to do so shall be grounds for suspension or revocation of an existing permit or denial of a renewal application.

8. Upon death of any permittee, the permittee's estate representative shall notify the department and return the concealed handgun permit to the department.

9. Any permittee or applicant who is subject to any preliminary or permanent injunction in any family or domestic dispute, or any other protective order issued pursuant to law, shall notify the department of the caption of the suit including the suit or proceeding number, the date of the issuance of the injunction or court order, and provide a signed copy of the court's order within three days of the issuance of any such order. Upon the issuance of the injunction or court order, the permit shall be automatically suspended and the department may revoke or deny the permit in accordance with law.

AUTHORITY NOTE: Promulgated in accordance with R.S. 40:1379.1, 40:1379.3, 40:1381, and 40:1382.

HISTORICAL NOTE: Promulgated by the Department of Public Safety and Corrections, Office of State Police, LR 22:850 (September 1996), amended LR 28:1484 (June 2002), LR 38:1284 (May 2012), LR 43:674 (April 2017).

§1315. Appeal and Hearing Procedures

A. Notice of Permit Denial and Appeal

1. An applicant who is denied a concealed handgun permit shall be notified in writing by the department. Such notice shall comply with R.S. 49:955(B). Upon receipt of such notice, the applicant shall have two options.

a. Option 1—Informal Review. The applicant shall have 10 business days to request an informal review of documentation and evidence provided by the applicant setting out reasons the denial should be considered improper. If the application denial is upheld after an informal review, he applicant may apply for a concealed handgun permit one year from the date of the denial letter. Reapplications one year following denial are reviewed as normal and not automatically approved. Should the applicant remain dissatisfied with the department's decision following this review process, the applicant may appeal this decision within 20 business days of receipt of the department's decision by requesting an administrative hearing. Any such hearing requested by an applicant shall be scheduled and conducted in accordance with the Administrative Procedure Act pursuant to R.S. 49:950 et seq.

b. Option 2—Formal Appeal. The applicant may appeal the denial by the department in writing within 30 days of receipt of the department's decision by requesting an administrative hearing. If an administrative hearing is held, and the administrative law judge upholds the denial, the applicant may apply for a concealed handgun permit one year from the date of the signed decision by the administrative law judge. Reapplications one year following denial are reviewed as normal and not automatically approved. Any such hearing requested by an applicant shall be scheduled and conducted in accordance with the Administrative Procedure Act pursuant to R.S. 49:950 et seq.

2. A request for an administrative hearing shall be made in writing and sent to the department. If no request for a hearing is timely made, the denial shall become final.

B. Notice of Suspension, Revocation or Fine

1. A permittee whose permit is revoked, suspended, or who is issued a fine shall be notified in writing by the department. Such notice shall be in compliance with R.S. 49:955(B), and the action shall be considered to be immediately in effect.

2. Upon receipt of such notice, the permittee shall have 10 business days to request, in writing, a review of the department's action. The permittee should provide the department with relevant information which might have some bearing on the department's action. The permittee should include any documents or other evidence he wishes the department to consider.

3. If the permittee is not satisfied with the outcome of the department's review, he may request judicial review pursuant to the Administrative Procedure Act, R.S. 49:964.

C. General Provisions

1. Upon receipt of a request for any review, the deputy secretary or his designee shall review the department's action considering the information submitted, and affirm, modify, or reverse the department's action. Written notice of the department's decision to affirm, modify or reverse the department's action shall be provided to the permittee.

2. Except as otherwise provided by these rules, any notice shall be served by certified mail, registered mail, or certificate of mailing to the permanent address that is provided in the application, or latest amendment thereto, on file with the department. If any incorrect or incomplete address has been supplied to the department by the applicant or permittee, such that service cannot be successfully completed, or the applicant or permittee fails to accept properly addressed mail, notice shall be presumed to have been given.

3. No applicant or permittee shall be allowed to carry a concealed handgun while any such appeals or considerations are pending.

4. Any fine levied by the department which is adjudicated to a final judgment shall be paid within 15 calendar days of said judgment. Failure to pay such a fine shall result in suspension or revocation of the permit.

5. In cases of serious violations of the law or these rules, or in situations in which the law calls for automatic suspension or revocation, or violations which present a danger to the public health, safety or welfare, the department may provide notice by telephone or hand delivery. Such notice shall be promptly documented and confirmation in writing shall be provided to the permittee.

6. Any request for an administrative hearing shall be made in writing and sent to the department within the delays allowed by these rules. If no request for a hearing is timely made, the action and/or penalty shall become final.

7. Any pre-hearing discovery for the administrative hearing shall be conducted pursuant to R.S. 49:956.

8. If the application denial is for failure to disclose an arrest and the applicant chooses to reapply after the one-year period, the applicant shall disclose the subject arrest and provide the disposition of the subject arrest on the next concealed handgun permit application.

AUTHORITY NOTE: Promulgated in accordance with R.S. 40:1379, 40:1381, and 40:1382.

HISTORICAL NOTE: Promulgated by the Department of Public Safety and Corrections, Office of State Police, LR 22:851 (September 1996), amended LR 38:1285 (May 2012), LR 43:675 (April 2017), LR 45:583 (April 2019).

§1317. Severability Clause

A. If any provision of these rules is declared invalid for any reason, that provision shall not affect the validity of the remaining rules or any other provision thereof.

AUTHORITY NOTE: Promulgated in accordance with R.S. 40:1379, 40:1381, and 40:1382.

HISTORICAL NOTE: Promulgated by the Department of Public Safety and Corrections, Office of State Police, LR 22:851 (September 1996).

Chapter 15. Explosives Code

Subchapter A. General

§1501. Scope of Rules and Regulations

A. Pursuant to Revised Statute 40:1472.1 through 40:1472.19, as amended, the following rules and regulations are adopted as required thereunder, covering the manufacture, storage, transportation, sale, use and handling of explosives and blasting agents in the state of Louisiana.

B. These rules and regulations shall not apply to the transportation of explosives or blasting agents when under the jurisdiction of and in compliance with the regulations of the U.S. Department of Transportation, and the regulations of the United States Coast Guard.

C. Nothing contained in these rules and regulations shall apply to the regular Armed Forces of the United States, or to the duly organized military force of any state or territory thereof, or to police or fire departments in this state, provided they are acting within their respective official capacities and in the proper performance of their duties.

D. These rules and regulations shall not apply to the transportation and use of explosives or blasting agents in the normal and emergency operations of federal agencies such as the Mine Safety and Health Administration, the Federal Bureau of Investigation and the Secret Service.

E. The licensee, on specific approval in writing by the Deputy Secretary of Public Safety Services, as provided by this Paragraph, may use an alternate method or procedure in lieu of a method or procedure specifically prescribed in these rules and regulations. The Deputy Secretary of Public Safety Services may approve an alternate method or procedure, subject to stated conditions, when he/she finds that:

1. good cause is shown for the use of the alternate method or procedure;

2. the alternate method or procedure is within the purpose of, and consistent with the effect intended by, the specifically prescribed method or procedure and that the alternate method or procedure is substantially equivalent to that specifically prescribed method or procedure; and

3. the alternate method or procedure will not be contrary to any provision of law and will not result in an increase in cost to the state of Louisiana or hinder the effective administration of these rules and regulations.

F. Where the licensee desires to employ an alternate method or procedure, he/she shall submit a written application to the Deputy Secretary of Public Safety Services. The application shall specifically describe the proposed alternate method or procedure and shall set forth the reasons for it. Alternate methods or procedures may not be employed until the application is approved by the Deputy Secretary of Public Safety Services. The licensee shall, during the period of authorization of an alternate method or procedure, comply with the terms of the approved application. Authorization of any alternate method or procedure may be withdrawn whenever, in the judgment of the Deputy Secretary of Public Safety Services, the effective administration of these rules and regulations is hindered by the continuation of the authorization. As used in this Paragraph, alternate methods or procedures include alternate construction or equipment.

AUTHORITY NOTE: Promulgated in accordance with R.S. 40:1472.1 et seq.

HISTORICAL NOTE: Filed by the Department of Public Safety, Office of State Police, at the Office of the State Register, 1974, promulgated and amended LR 10:803 (October 1984), amended by the Department of Public Safety and Corrections, Office of State Police, Transportation and Environmental Safety Section, Explosive Control Unit, LR 22:1230 (December 1996), amended by the Department of Public Safety and Corrections, Office of State Police, LR 26:90 (January 2000), LR 36:550 (March 2010).

§1503. Definitions

Approved—approved by the Office of the Deputy Secretary of Public Safety Services.

Artificial Barricade—an artificial mound or revetted wall of earth of a minimum thickness of 3 feet.

Barricaded—building containing explosives is effectively screened from a magazine, building, railway, or highway, either by a natural barricade or by an artificial barricade of such height that a straight line from the top of any sidewall of the building containing explosives to the eave line of any magazine or building, or to a point 12 feet above the center of a railway or highway, will pass through such intervening natural or artificial barricade.

Blaster—any person employed by a primary licensee who detonates or otherwise effects the explosion of an explosive by loading, arming or firing an explosive or who is in immediate personal charge and supervision of one or more other persons engaged in such activity.

Combustible—any material with a flash point above 140° Fahrenheit and less than 200° Fahrenheit.

Dealer—any person engaged in the wholesale or retail business of buying and selling explosives, provided that should a manufacturer-distributor make sales to users, such manufacturer shall not be required to obtain an additional license as a dealer.

Dealer-Distributor—any person engaged in the wholesale or retail business of buying and selling, or distribution of explosives, provided that should a manufacturer make sales to users, such manufacturer shall not be required to obtain an additional license as a dealer.

Deputy Secretary of Public Safety Services—the deputy secretary for Public Safety in the Department of Public Safety and Corrections, or his designee.

Emergency Contact Telephone Number—a telephone number that will be answered by a knowledgeable company representative who can answer questions about the company's product stored in said company's licensed explosive magazine twenty four hours daily seven days per week including holidays. The contact person shall also have the ability to provide or effect a timely response in the event of an emergency or an incident requiring a response.

Explosives—any chemical compound, mixture, or device, the primary or common purpose of which is to function by explosion. The term includes but is not limited to dynamite and other high explosives, black powder in quantities in excess of 5 pounds, pellet powder, initiating explosives, detonators, safety fuses, squibs, detonating cord, igniter cord, and igniters. The term *explosives* further includes but is not limited to the following.

1. *Binary* (*phosphoric*)—two or more unmixed, commercially manufactured prepackaged chemical substances including oxidizers, flammable liquids or solids, or similar substances that are not independently classified as explosives but which when mixed or combined form a mixture that is classified as an explosive and that is intended for blasting.

2. *Blasting Agent*—any material or mixture, consisting of fuel and oxidizer, intended for blasting, not otherwise defined as an explosive; provided, that the finished product, as mixed for use or shipment, cannot be detonated by means of a number eight test blasting cap when unconfined.

3. *Detonator*—any device containing an initiating or primary explosive that is used for initiating detonation in another explosive material. A detonator may not contain more than 10 grams of total explosives by weight, excluding ignition or delay charges. The term includes but is not limited to electric blasting caps of instantaneous and delay types, blasting caps for use with safety fuses, detonating cord delay connectors, and nonelectric instantaneous and delay blasting caps which use detonating cord, shock tube, or any other replacement for electric leg wires. When used in this Chapter, the term *cap* shall have the same meaning as the term *detonator*.

4. The term *explosive* shall not include smokeless powder when used in sporting arms.

Factory Building—any building or other structure, except, magazines, containing explosives in which the manufacture of explosives or any processing involving explosives is carried on, and any building where explosives are used as a component part or ingredient in the manufacture of any article or device. The definition does not include private residences or shop buildings where hand loading of small arms ammunition is being carried on.

Flammable—any material with a flash point of 140° Fahrenheit or less.

Handler—a person who touches, moves, or otherwise handles explosives but does not detonate or otherwise effect the explosion of explosives by loading, arming or firing the explosive. The license issued to a handler shall not be used by a blaster or user who uses explosives as an ultimate consumer. However, an individual with a blaster's license may engage in the activities of a handler without a handler's license.

Highway—any public street or public road, public highway, alley or thoroughfare. Public highways of Class A to D as applied to the American Table of Distances for Storage of Explosives are highways with an average traffic volume of three thousand or less vehicles per day as specified in American Civil Engineering Practice (Abbett, Volume1, Table 46, Section 3-74, 1956 Edition, John Wiley and Sons).

Inhabited Building—any building or structure regularly used in whole or part as a place of human habitation, also any church, school, store, railway passenger station, airport terminal for passengers, and any other building or structure where people are accustomed to congregate or assemble, but excluding buildings or structures occupied in connection with the manufacture, transportation, storage and use of explosives. A building, such as an office building or repair shop, which is part of the premises of an explosives licensee and is used in connection with the manufacture, transportation, storage, or use of explosives is not an inhabited building.

Local Office—as applies to a user, means a structure, place of rental, such as an apartment or motel, or a movable such as a barge, ship or vehicle in the vicinity of the storage container.

Magazine—any building, structure, or device used for temporary or permanent storage of explosives. There shall be five types of magazines built and/or constructed in accordance with the rules and regulations promulgated pursuant to this Chapter. This definition does not apply to the storage of explosives in underground mining operations.

Magazine License Number—the number of a specific magazine license assigned to a specific magazine by Louisiana Department of Public Safety, Explosive Control Unit.

Manufacturer—a person engaged in the manufacture, compounding, or combining of explosives

Manufacturer-Distributor—a person engaged in the manufacture, compounding, combining, or distribution of explosives.

Natural Barricade—natural features of the ground such as hills, or timber of sufficient density that the surrounding exposures which require protection cannot be seen when the trees are bare of leaves.

Offshore—any work performed at locations accessible only by air or water when the work location is totally surrounded by water and explosives are secured and attended.

Oxidizer—any material that may, generally by yielding oxygen, cause or enhance the combustion of other materials.

Person—any individual, corporation, company, association, firm, partnership, society, or joint stock company.

Primary Licensee—the responsible party holding a valid manufacturer, dealer-distributor or user license.

Purchase and its various forms—includes acquisition of any explosive by a person with or without consideration.

Railroad—any steam, electric, diesel electric, or other railroad or railway which carries passengers for hire.

Sale and its various forms—includes delivery of an explosive with or without consideration.

Secured Area—any location that is either locked or under the immediate control of a licensee.

Temporary—no more than 48 hours.

Unauthorized Persons—persons not employed by the licensed company or authorized by the licensed manufacturer, dealer-distributor or user.

User—a person who, as an ultimate consumer of an explosive, purchases the same from a dealer-distributor or manufacturer or means a dealer or manufacturer who uses an explosive as an ultimate consumer.

Vessel—any description of watercraft used or capable of being used as a means of transportation on water.

AUTHORITY NOTE: Promulgated in accordance with R.S. 40:1472.1 et seq.

HISTORICAL NOTE: Filed by the Department of Public Safety, Office of State Police, at the Office of the State Register, 1974, promulgated and amended LR 10:803 (October 1984), amended by the Department of Public Safety and Corrections, Office of State Police, Transportation and Environmental Safety Section, Explosive Control Unit, LR 22:1230 (December 1996), amended by the Department of Public Safety and Corrections, Office of State Police, LR 26:90 (January 2000), amended LR 34:2674 (December 2008), LR 36:550 (March 2010).

§1505. General Administrative Requirements

A. All incidents or accidents involving explosives which resulted in property damage, injuries, or fatalities shall be reported to the Deputy Secretary of Public Safety Services, Explosives Control Unit through the State Police Hot Line (225-925-6595) immediately!

B. No person under the age of 21 shall purchase or acquire explosives or explosive supplies.

C. No person shall store, handle, or transport explosives or blasting agents when such storage, handling and transportation of explosives or blasting agents constitutes an undue hazard to life and property.

D. No person or business shall possess, keep, store, sell, or offer for sale, give away, use, transport, or dispose of , or otherwise handle in any manner any explosive or blasting agent except in conformity with the provisions of R.S. 40:1472.2 et seq. Nothing in this Subsection shall be so construed as to prevent hand-loaders of ammunition from giving small quantities of black powder or smokeless propellant to one another in quantities of one pound or less.

E. Nothing in these rules and regulations shall be construed to prohibit the use of explosives in the form prescribed by the official United States Pharmacopoeia.

F. Prior to the sale of any explosives, manufacturers and dealer-distributors are to possess a copy of the purchasing company's current explosives license. Manufacturers and dealer/distributors shall be required to retain copies of sales of explosives for a period of not less than 24 months. These sale slips or invoices must be legible, correct and complete.

G. Persons having explosives in their possession that were purchased prior to the serialization requirements set forth in this Chapter must notify the Deputy Secretary of Public Safety Services through Explosive Control, Baton Rouge, Louisiana.

H. No explosives or blasting agents shall be manufactured within this state unless the persons engaged therein possess a valid and subsisting license issued by the Office of the Deputy Secretary of Public Safety Services, in accordance with the provisions of R.S. 40:1472.1 through 40:1472.19.

I. Nothing contained in these rules and regulations shall be in conflict with provisions of the National Security Act of 1947, as amended, or the Espionage and Sabotage Act of 1954, as amended, or the Organized Crime Control Act of 1970 "PL 91-452, Chapter 40."

J. Each manufacturer, dealer-distributor, user, blaster, or handler shall possess a valid and subsisting license issued by the Office of the Deputy Secretary of Public Safety Services, in accordance with the provisions of R.S. 40:1472.1 through 40:1472.19. If requested by the deputy secretary, applicants for a license shall submit with their application two complete, legible, and classifiable FBI applicant fingerprint cards taken by a person employed by a law enforcement agency who is appropriately trained in recording fingerprints. Cost incurred by the department for processing,

Louisiana State Police and Federal Bureau of Investigation fingerprint cards shall be borne by the applicant.

K. A photo license issued by the Office of the Deputy Secretary of Public Safety Services shall be in the possession of the licensee while actively engaged in explosive handling. An original or copy of the paper license issued by the Office of the Deputy Secretary of Public Safety Services must be maintained at the licensee's local office. A fee of $25 shall be paid to the Department of Public Safety and Corrections, Explosives Control Unit for any necessary replacement or modification of a license.

1. The photo license shall not be required to be in the possession of the licensee only when the presence of the license would create a danger of physical injury to the licensee or others and only while the licensee is actually working with explosives on his employer's facility. However, when this exception is invoked, the license shall be on file or otherwise available at the site of the employer's facility and, upon request, shall be produced for inspection within a reasonable amount of time.

L. Licensees shall keep records required by this Chapter on the business premises for five years from the date a transaction occurs or until discontinuance of business or operations by the licensee.

AUTHORITY NOTE: Promulgated in accordance with R.S. 40:1472.1 et seq.

HISTORICAL NOTE: Filed by the Department of Public Safety, Office of State Police, at the Office of the State Register, 1974, promulgated and amended LR 10:803 (October 1984), amended by the Department of Public Safety and Corrections, Office of State Police, Transportation and Environmental Safety Section, Explosive Control Unit, LR 22:1230 (December 1996), amended by the Department of Public Safety and Corrections, Office of State Police, LR 34:2674 (December 2008), LR 35:491 (March 2009), LR 36:550 (March 2010), LR 40:2609 (December 2014), LR 45:281 (February 2019).

§1507. Blasting Agents

A. Buildings or other facilities used for mixing blasting agents, including mobile equipment, shall be located, with respect to inhabited buildings, passenger railroads and public highways, in accordance with the American Table of Distances as set forth in §1545, Appendix A.

B. Minimum intra-plant separation distances between mixing units and the oxidizer storage areas and blasting agents storage areas shall comply with the American Table of Distances [see §§1545, Appendix A, and 1547, Appendix B].

C. If oxidizer is stored at a closer distance to the blasting agent storage area than as provided in §1507.B above, one-half its weight shall be added to the quantity of blasting agents to calculate the total quantity involved for application of the aforementioned table (Subsection A).

D. Buildings used for the mixing of blasting agents shall conform to the requirements of these rules and regulations, unless otherwise specifically approved by the Office of the Deputy Secretary of Public Safety Services.

E. Buildings shall be of noncombustible construction or sheet metal on wood studs.

F. The layout of the mixing building shall be such as to provide physical separation between the finished product storage and the mixing and packaging operations.

G. Floors in storage areas and in the processing plant shall be of concrete. Isolated fuel storage shall be provided to avoid contact between molten oxidizer and fuel in case of fire.

H. The building shall be well ventilated.

I. Heat shall be provided exclusively from a unit outside the building.

J. The design of the mixer shall minimize the possibility of frictional heating, compaction, and especially, confinement. Bearings and gears shall be protected against the accumulation of oxidizer dust. All surfaces shall be accessible for cleaning. Mixing and packaging equipment shall be constructed of materials compatible with the fuel-oxidizer composition.

K. The sensitivity of the blasting agent shall be determined by means of a Number 8 test blasting cap at regular intervals and after every change in ingredients, composition or packaging, or as may be requested by the Office of the Deputy Secretary of Public Safety Services.

L. No Hydrocarbon liquid fuel with flash point lower than that of Number 2 Diesel fuel oil (125° minimum or legal) shall be used.

M. If solid fuels are used, they shall be chosen so as to minimize dust explosion hazards.

N. Metal dusts (aluminum powder, etc.) peroxides, chlorates or perchlorates shall not be used unless such operations are conducted in a manner approved by the Deputy Secretary of Public Safety Services.

O. Unusual compositions shall not be attempted except under the supervision of competent personnel equipped to determine the over-all hazards of the resulting compositions.

P. All electrical switches, controls, motors, and lights, if located in the mixing room, shall conform to the requirements of Class II, Division 2 of the National Electrical Code, otherwise, they shall be located outside the mixing room. The frame of the mixer and all other equipment that may be used shall be electrically bonded and be provided with a continuous path to the ground.

Q. Clean or washdown facilities shall be provided. Floors shall be constructed so as to eliminate open floor drains and piping into which molten materials could flow and be confined in case of fire. The floors and equipment of the mixing and packaging room shall be washed down frequently to prevent accumulation of oxidizers or fuels and other sensitizes. The entire mixing and packaging plant shall be washed down periodically to prevent excessive accumulation of dust, washdown facilities need not be maintained on job site mixing operations.

R. Smoking or open flames shall not be permitted in or within 50 feet of any building or facility used for the mixing of blasting agents.

S. Empty oxidizer containers shall be disposed of daily in a safe manner.

T. Not more than one day's production of blasting agents shall be permitted in or near the mixing and packaging plant or area. Larger quantities shall be stored in separate warehouses or magazines in accordance with §1509.

AUTHORITY NOTE: Promulgated in accordance with R.S. 40:1472.1 et seq.

HISTORICAL NOTE: Filed by the Department of Public Safety, Office of State Police, at the Office of the State Register, 1974, promulgated and amended LR 10:803 (October 1984), amended by the Department of Public Safety and Corrections, Office of State Police, Transportation and Environmental Safety Section, Explosive Control Unit, LR 22:1230 (December 1996), amended by the Department of Public Safety and Corrections, Office of State Police, LR 26:90 (January 2000).

§1509. General Storage Requirements

A. All explosives, including black powder in excess of 5 pounds, except when preempted by federal or state regulations, shall be kept in magazines which meet the requirements of these rules and regulations. Blasting agents shall be stored in accordance with the requirements set forth in §1515. Storage of explosives in underground mining operations is exempt from the rules and regulations set forth in this Section, but must comply with all applicable federal regulations set forth in 30 CFR Part 57. Underground mine storage will provide all adequate safety and security procedures necessary to ensure that unlicensed personnel will not have access to the explosives. Such security must be approved by the Deputy Secretary of Public Safety Services.

B. Loaded perforating guns are not required to be stored in magazines. Storage of these explosive devices must be in a secured area approved by the Deputy Secretary of Public Safety Services.

C. Detonators shall not be stored in the same magazines with other explosives.

D. The ground around outdoor magazines shall slope away for drainage. The land surrounding outdoor magazines shall be kept clear of brush, dried grass, leaves, and other combustible materials for a distance of 50 feet in each direction.

E. Magazines, as required by these rules and regulations, shall be used for the storage of explosives only, and shall be of five Types, 1 through 5.

F. When a building or magazine containing ammonium nitrate and/or blasting agents is not barricaded, the distances shown in Table 2 shall be doubled.

G. Magazines must be located on property in accordance with the American Table of Distances for Storage of Explosives (§1545, Table 1).

H. When two or more storage magazines are located on the same property, each magazine must comply with the minimum distances specified from inhabited buildings, railways and highways; and in addition, they shall be separated from each other by not less than the distances shown for Separation of Magazines, (Table 1) except that the quantity of explosives contained in detonator magazines shall govern in regard to the spacing of said detonator magazines from magazines containing other explosives. If any two or more magazines are separated from each other by less than the specified Separation of Magazines (Table 1) distances, then such two or more magazines, as a group, must be considered as one magazine, and the total quantity of explosives stored in such group must be treated as if stored in a single magazine located on the site of any magazine of the group, and must comply with the minimum of distances specified from other magazines, inhabited buildings, railways and highways.

1. All types of detonators in strengths up to and including No. 8 detonators shall be rated at 1.5 pounds of explosives per 1,000 caps. Detonating cord, 50 grains, shall be rated at 8 pounds of explosives per 1,000 feet. Detonating cords with larger or smaller grains per foot will be rated proportionately.

2. Explosive operations carried out on a vessel shall be required to comply with the distances shown for Separation of Magazines (Table 1) only as the physical limitations of the vessel will permit. Explosive magazines shall not be located under, over, or immediately adjacent to pressurized gas lines or high voltage power lines, or on levees constructed for major flood control.

I. The storage of more than 300,000 pounds of explosives in one magazine or in a group of magazines which is considered as one magazine will not be approved.

J. This table applies only to the manufacture and permanent or portable storage of explosives. It is not applicable to the transportation of explosives, or any handling or temporary storage necessary or incident thereto. It is not intended to apply to bombs, projectiles, or other heavily encased explosives used by the military.

K. All factory buildings and magazines in which explosives are had, kept, or stored, must be located beyond the corporate limits of any city or town, except with the consent of the proper local authorities and the Office of the Deputy Secretary of Public Safety Services. In no instance shall magazines located inside buildings contain in excess of 50 pounds of explosives. Smokeless propellants shall not be included in these quantity limitations. Cap magazines must be separated from other magazines by a distance of at least 10 feet. Where such storage is permitted, it shall be located on the ground floor and at street level.

L. No smoking, matches, flame producing devices or fire of any kind shall at any time be permitted inside of or within 50 feet of a magazine.

M. Persons leasing or renting explosive storage magazines for use in the state of Louisiana shall insure the magazines are in compliance with the provisions of this

Chapter and the rules and regulations section prior to releasing the magazines to the customer.

N. American Table of Distances for Storage of Explosives (Table 1) is in §1545, Appendix A.

AUTHORITY NOTE: Promulgated in accordance with R.S. 40:1472.1 et seq.

HISTORICAL NOTE: Filed by the Department of Public Safety, Office of State Police, at the Office of the State Register, 1974, promulgated and amended LR 10:803 (October 1984), amended by the Department of Public Safety and Corrections, Office of State Police, Transportation and Environmental Safety Section, Explosive Control Unit, LR 22:1230 (December 1996), amended by the Department of Public Safety and Corrections, Office of State Police, LR 26:91 (January 2000), LR 36:550 (March 2010), LR 45:281 (February 2019).

§1511. Magazine Construction Requirements

A. Magazines shall be constructed in conformity with the provisions of these rules and regulations, or may be of substantially equivalent construction satisfactory to the Office of the Deputy Secretary of Public Safety Services.

B. Magazines for the storage of explosives, other than black powder or smokeless propellant shall be bullet-resistant, weather-resistant, fire-resistant, theft-resistant, and ventilated sufficiently to protect the explosive in the specific locality. Magazines used only for the storage of black powder or smokeless propellant shall be weather-resistant, fire-resistant, theft-resistant, and have ventilation. Magazines for storage of detonators shall be weather-resistant, fire-resistant, theft-resistant, and ventilated.

C. Magazine sites upon which outdoor type magazines are located shall be posted with signs reading "explosives-keep out" (or equivalent) legibly printed thereon in letters not less than 2 inches high. These signs shall be visible from any direction. A second sign shall be posted at the entrance of the facility and shall read "Danger—Never fight explosives fires—Explosives are stored on this site—Call (Emergency Phone Number)" legibly printed thereon in letters not less than 2 inches high. Such signs shall be located so as to minimize the possibility of a bullet traveling in the direction of the magazine if anyone should shoot at the sign. All licensed magazines shall have a license number and 24 hour emergency telephone contact number affixed to the front of the magazine in the following manner.

1. The license number assigned by the Louisiana Department of Public Safety, Explosive Control Unit, for that specific magazine will be permanently inscribed, welded, or otherwise permanently affixed to one hood covering a lock on each indoor and outdoor magazine; does not apply to Type 3 magazines. The letters and numbers shall be at least 1/4" in height die stenciled, welded or engraved in a manner that is clear, legible and permanent.

D. Magazines shall not be provided with heat or lights, except that if lights are necessary, an approved safety flashlight or safety lantern shall be used, provided however, trailer mounted portable magazines while containing no explosives shall use normal automobile lighting systems required for highway use. The Office of the Deputy Secretary of Public Safety Services may waive the requirements of this Subsection if adequate safety is assured.

E. Magazines constructed according to the following minimum specifications are approved as bullet-resistant and fire-resistant.

1. Exterior Construction

a. The exterior and doors are to be constructed of not less than 1/4 inch steel and lined with at least 2 inches of hardwood. Magazines with top openings will have lids with water-resistant seals or which overlap the sides by at least 1 inch when in a closed position.

2. General

a. Outdoor magazines (Type 1 and 2) are to be bullet-resistant, fire-resistant, weather-resistant, theft-resistant and ventilated. They are to be supported to prevent direct contact with the ground and, if less than 1 cubic yard in size, must be securely fastened to a fixed object. The ground around outdoor magazines must slope away for drainage or other adequate drainage provided. When unattended, vehicular magazines must have wheels removed or otherwise effectively immobilized by kingpin locking devices or other methods approved by the director.

b. Magazines shall be constructed in accordance with the rules and regulations of the Bureau of Alcohol, Tobacco, Firearms and Explosives, 27 Code of Federal Regulations Parts 555.207, 555.208, 555.209, 555.210, 555.211.

Types 1, 2, 3 or 4 magazines shall be constructed with a lattice, paint, mastic, or equivalent lining, to prevent contact of explosive materials with masonry walls or ferrous metal.

F. A Type 3 magazine is a "day box" or other portable magazine. It must be theft-resistant, fire-resistant, and weather-resistant (does not have to be bullet-resistant).

1. Minimum specifications require that a "day box" be constructed of not less than 12-gauge (.1046 inch) (2.66 mm) steel or aluminum, lined with 1/2 inch (12.7 mm) hardboard or plywood. The door or lid must overlap the door opening by at least 1 inch (25 mm). Hinges, hasps, and panels shall be welded, riveted, or bolted (with nuts on inside) so they cannot be removed or disassembled from the outside.

2. The magazine shall be equipped with at least a 5-tumbler padlock (which need not be protected by a steel hood) meeting the lock requirements outlined in §1511.I.1 of this Chapter.

3. Explosive materials are not to be left unattended in Type 3 magazines and must be removed to Type 1 or Type 2 magazines. This requirement does not apply to offshore operations.

G. Unattended vehicular Type 5 magazines shall have wheels removed or shall be immobilized by kingpin locking devices. Placards required by DOT must be displayed on all Type 5 magazines containing blasting agents.

H. Magazines used for indoor storage shall be fire- and theft-resistant. They do not have to be weather- and bullet-resistant if the buildings in which they are stored provide protection from the weather and from bullet penetration.

1. No indoor storage facility shall contain more than 50 pounds (22.7 kg) of explosive materials or more than 5,000 detonators. When explosive materials and detonators are stored in the same building they shall be stored in separate magazines.

2. No indoor storage magazine for explosive materials shall be located in a residence or dwelling.

3. Indoor magazines shall be provided with handles or substantial wheels or casters to facilitate removal from a building in an emergency.

I. All magazines shall be equipped with approved locking devices which shall conform to at least the following minimum standards of quality and design:

1. padlocks shall consist of a steel or brass case of at least 1 1/8 inch thickness, with case hardened steel shackles of 3/8 inch diameter and 2-inch maximum length when in the locked position. Either one 12-pin or two 5-pin locks may be used (Type 3 and Type 5 magazines only require one 5-pin lock). Key numbers shall be removed from the locks. Padlocks to be enclosed by a hooded metal type enclosure 1/4-inch thick steel. Hooded enclosure must be constructed to restrict forcible entry from pry bars, hacksaws, and bolt cutters;

2. two mortise locks;

3. combination of a mortise lock or a hooded padlock;

4. mortise lock that requires two keys to open; or

5. three-point lock or equivalent-type lock that secures the door to the frame at more than one point;

6. doors that are secured by at least two substantial internal bolts or bars do not require additional locking devices on the exterior.

AUTHORITY NOTE: Promulgated in accordance with R.S. 40:1472.1 et seq.

HISTORICAL NOTE: Adopted by the Department of Public Safety, Office of State Police, 1974, amended and promulgated LR 10:803 (October 1984), amended by the Department of Public Safety and Corrections, Office of State Police, Transportation and Environmental Safety Section, Explosive Control Unit, LR 22:1230 (December 1996), LR 24:105 (January 1998), amended by the Department of Public Safety and Corrections, Office of State Police, LR 26:91 (January 2000), LR 34:1037 (June 2008), LR 34:2675 (December 2008), LR 36:551 (March 2010).

§1513. Storage within Magazines

A. Packages of explosives stored in magazines shall be laid flat with the top side up, except when turning dynamite to minimize exudation, the case may be laid flat with top side down. Black powder, when stored in magazines with other explosives, shall be stored separately. Black powder stored in kegs shall be stored on ends, bungs down, or on side, seams down. Corresponding grades and brands shall be stored together in such a manner that brands and grade marks show. All stocks shall be stored so as to be easily counted and checked. Packages of explosives shall be piled in a stable manner. When any kind of explosive is removed from a magazine for use, the oldest explosive of that particular kind shall always be taken first. Electric detonators will be shunted (shorted by twisting bare lead together) except when tying to firing lines. When electric detonators have broken lead wires of insufficient length to shunt, the detonator will be wrapped in at least a double thickness of metal foil to prevent accidental discharge from stray extraneous current.

B. Packages of explosives shall not be unpacked or repacked within magazines nor within 50 feet of such magazines or in close proximity to other explosives. This requirement does not apply when working in proximity to indoor magazines. Tools used for opening packages of explosives shall be constructed of nonsparking material, except that metal slitters may be used for opening fiberboard boxes. A wood wedge and fiber, rubber or wood mallet shall be used for opening or closing wood packages of explosives. Opened packages of explosives shall be securely closed before being returned to a magazine.

C. Magazine floors shall be regularly swept, kept clean, dry, free of grit, paper, empty used packages and rubbish. Brooms and other cleaning utensils shall not have any spark-producing metal parts. Sweepings from floors of magazines shall be properly disposed of. Magazine floors stained with nitroglycerin shall be cleaned according to the instructions of the explosives manufacturer.

D. When any explosive has deteriorated to an extent that it is in an unstable or dangerous condition, or if nitroglycerin leaks from any explosive, then the person in possession of such explosive shall immediately report the circumstance to the Office of the Deputy Secretary of Public Safety Services.

E. When magazines need inside repairs, all explosives shall be removed and the floor cleaned. In making outside repairs, if there is a possibility of causing sparks or fire, the explosives shall be removed from the magazine. Explosives removed from a magazine under repair shall either be placed in another magazine or placed a safe distance from the magazine. The explosives shall be properly guarded and protected until repairs have been completed, then returned to the magazine.

F. Smoking, matches, open flames, spark producing devices and firearms shall be prohibited inside of or within 50 feet of magazines.

G. Magazine safety and security shall be the responsibility of a competent person at all times, who shall be responsible for compliance with these rules and regulations.

H. Magazine doors and covers must be kept closed and locked with approved locking devices except when opened for transacting business.

I. The keys to a primary licensee's magazine doors and covers must be available only to the primary licensee and

one of his blasters. Variances to this requirement may be requested in writing to the Deputy Secretary of Public Safety Services. It is the primary licensee's responsibility to keep his magazine locked from all unauthorized persons.

AUTHORITY NOTE: Promulgated in accordance with R.S. 40:1472.1 et seq.

HISTORICAL NOTE: Filed by the Department of Public Safety, Office of State Police, at the Office of the State Register, 1974, promulgated and amended LR 10:803 (October 1984), amended by the Department of Public Safety and Corrections, Office of State Police, Transportation and Environmental Safety Section, Explosive Control Unit, LR 22:1230 (December 1996), amended by the Department of Public Safety and Corrections, Office of State Police, LR 26:91 (January 2000).

§1515. Storage of Blasting Agents

A. Blasting agents and oxidizers used for mixing of blasting agents shall be stored in the manner set forth in this Section. Storage of explosives in active underground operations is exempt from the rules and regulations set forth in this Section, but must comply with all applicable federal regulations set forth in 30 CFR Part 57. Underground mine storage will provide all adequate safety and security procedures necessary to ensure that unlicensed personnel will not have access to explosives. Such security must be approved by the Deputy Secretary of Public Safety Services.

B. Blasting agents or oxidizers when stored in conjunction with explosives shall be stored in the manner set forth in §1509, §1511 and §1513. The quantity of blasting agents or oxidizers shall be included when computing the total quantity of explosives for determining distance requirements.

C. Blasting agents, when stored entirely separate from other explosives, shall be stored in one-story warehouses without basements. These warehouses shall be:

1. noncombustible or fire resistive;

2. constructed so as to eliminate open floor drains and piping into which molten materials could flow and be confined in case of fire;

3. weather resistant;

4. well ventilated; and

5. equipped with a strong door kept securely locked except when open for business.

D. Semi-trailer or full vans used for highway or on-site transportation of blasting agents are satisfactory for temporarily storing these materials, provided they are located according to the American Table of Distances with respect to inhabited buildings, passenger railroads and public highways. Trailers shall be provided with approved locking devices, and the trailer doors shall be kept locked, except during the time of placement and removal of stocks of blasting agents.

E. Warehouses used for the storage of blasting agents separate from other explosives shall be located as follows.

1. Warehouses used for the storage of blasting agents shall be located in accordance with the provisions of the American Table of Distances with respect to inhabited buildings, passenger railroads and public highways.

2. If both blasting agents and oxidizers are handled or stored within the distance limitations prescribed in §1507, one-half the weight of the oxidizer shall be added to the weight of the blasting agent to determine the proper distance for compliance with the American Table of Distances.

3. Smoking, matches, open flames, spark producing devices and firearms shall be prohibited inside of or within 50 feet of any warehouse used for the storage of blasting agents. Combustible materials shall not be stored within 50 feet of warehouses used for the storage of blasting agents.

F. The interior of warehouses used for the storage of blasting agents shall be kept clean and free from debris and empty containers. Spilled materials shall be cleaned up promptly and safely removed. Combustible materials, flammable liquids, corrosive acids, chlorates, nitrates or similar materials shall not be stored in any warehouse used for blasting agents unless separated therefrom by a fire resistive separation of not less than one hour resistance.

G. Floors in storage warehouses shall be of concrete. Underground storage such as in salt mines are exempt from this requirement.

H. Bags of blasting agents, when stored in other than magazines or lined trailers, shall not be piled less than 30 inches from the building walls in piles not more than 12 feet in width, with aisles not less than 30 inches between piles. If the storage building has foundation and roof ventilation and has an air space between the floor perimeter and the walls, the 30-inch spacing from walls may be disregarded. Piles of blasting agents shall not be higher than within 36 inches of the eave line of the roof or the supporting and spreader beams overhead.

I. Piles of oxidizers and warehouses containing oxidizers shall be adequately separated from readily combustible fuels.

J. Caked oxidizers, either in bags or in bulk, shall not be loosened by blasting.

K. Every warehouse used for the storage of blasting agents shall be under the supervision of a competent person.

L. The Department of Public Safety has the authority to and may designate the location for, and limit the quantity of blasting agents which may be loaded, unloaded, reloaded, or temporarily retained at any facility within the jurisdiction; provided, however, nothing in this Subsection shall be construed so as to be in conflict with these rules and regulations and the Table of Distances in particular.

AUTHORITY NOTE: Promulgated in accordance with R.S. 40:1472.1 et seq.

HISTORICAL NOTE: Filed by the Department of Public Safety, Office of State Police, at the Office of the State Register, 1974, promulgated and amended LR 10:803 (October 1984), amended by the Department of Public Safety and Corrections,

Office of State Police, Transportation and Environmental Safety Section, Explosive Control Unit, LR 22:1230 (December 1996).

§1517. Storage Inventory

A. Manufacturers and dealer-distributors must keep accurate accounts of all inventories and sales of explosives. Invoices, sales tickets, or explosive bills of sale that are delivered to the purchaser shall bear the name of the manufacturer or dealer-distributor, the name of the user, the name of the purchaser, the address of the purchaser, the user's license number, date of sale, identification of the type of explosives sold, quantity sold, date-shift-code, and the use for which the explosives are purchased.

B. An accurate inventory of the stock of explosives and caps in magazines must be maintained at each "primary licensee's" local office. The inventory must reflect the date, date/shift-code, quantity on hand, quantity received, quantity issued, quantity returned, and balance on hand at all times of each brand and grade.

C. Records will be maintained for three years on all retail sales of black powder. In addition to the brand, grade, and lot number, the record will reflect the name, street address, city and state of the purchaser. The purchaser will be required to produce identification in the form of driver's license, military identification, or equivalent. This record may be in the form of a sales invoice providing it contains the required information.

AUTHORITY NOTE: Promulgated in accordance with R.S. 40:1472.1 et seq.

HISTORICAL NOTE: Filed by the Department of Public Safety, Office of State Police, at the Office of the State Register, 1974, promulgated and amended LR 10:803 (October 1984), amended by the Department of Public Safety and Corrections, Office of State Police, Transportation and Environmental Safety Section, Explosive Control Unit, LR 22:1230 (December 1996), amended by the Department of Public Safety and Corrections, Office of State Police, LR 34:2676 (December 2008).

§1519. Shortages or Thefts

A. In case a magazine is broken into, the owner must immediately notify the police or the sheriff, and the Office of the Deputy Secretary of Public Safety Services through the Explosive Control Unit, Baton Rouge, Louisiana. Unexplained shortages or thefts must be reported immediately to the aforementioned authorities.

AUTHORITY NOTE: Promulgated in accordance with R.S. 40:1472.1 et seq.

HISTORICAL NOTE: Filed by the Department of Public Safety, Office of State Police, at the Office of the State Register, 1974, promulgated and amended LR 10:803 (October 1984), amended by the Department of Public Safety and Corrections, Office of State Police, Transportation and Environmental Safety Section, Explosive Control Unit, LR 22:1230 (December 1996).

§1521. General Transportation Requirements

A. In addition to all other applicable requirements set forth in these rules and regulations, the transportation of explosives over all highways shall be in accordance with the U.S. Department of Transportation regulations.

B. Explosives shall not be transported through any prohibited vehicle tunnel, or subway, or over any prohibited bridge, roadway, or elevated highway.

C. No licensee or an agent thereof shall smoke, carry matches or any other flame producing device, or carry firearms or loaded cartridges while in a conveyance transporting explosives. Nothing in this Subsection shall be so construed as to prevent the presence of a duly authorized and legally constituted armed guard on such conveyances where security considerations dictate their necessity to possess or carry a firearm.

D. Explosives shall not be carried or transported in or upon a public conveyance or conveyances carrying passengers for hire.

E. Explosives shall not be transferred from one vehicle to another within the corporate limits of any city or town without informing the local fire and police department thereof. In the event of breakdown or collision, the local fire and police department shall be promptly notified to help safeguard such emergencies. In the event of a collision/accident, the Department of Public Safety and Corrections Explosives Control Unit, will be notified immediately by telephone. Explosives shall be transferred from the disabled conveyance to another only when proper and qualified supervision is provided.

AUTHORITY NOTE: Promulgated in accordance with R.S. 40:1472.1 et seq.

HISTORICAL NOTE: Filed by the Department of Public Safety, Office of State Police, at the Office of the State Register, 1974, promulgated and amended LR 10:803 (October 1984), amended by the Department of Public Safety and Corrections, Office of State Police, Transportation and Environmental Safety Section, Explosive Control Unit, LR 22:1230 (December 1996), amended by the Department of Public Safety and Corrections, Office of State Police, LR 36:551 (March 2010).

§1523. Transportation Safety Requirements

A. Conveyances used for transporting explosives shall comply with all regulations as set forth by the U.S. Department of Transportation. Conveyances used in underground mining operations regulated by the Mine Safety and Health Administration (MSHA) are exempt from this requirement.

AUTHORITY NOTE: Promulgated in accordance with R.S. 40:1472.1 et seq.

HISTORICAL NOTE: Filed by the Department of Public Safety, Office of State Police, at the Office of the State Register, 1974, promulgated and amended LR 10:803 (October 1984), amended by the Department of Public Safety and Corrections, Office of State Police, Transportation and Environmental Safety Section, Explosive Control Unit, LR 22:1230 (December 1996).

§1525. Operation of Vehicles

A. Conveyances transporting explosives shall only be driven by and be in charge of a driver who is physically fit, careful, capable, reliable, able to read and write the English language, and not addicted to the use, or under the influence, of intoxicants or narcotics, and not less than 18 years of age. He shall be familiar with the traffic regulations, state laws,

and the provisions of these rules and regulations. The driver shall always have his vehicle under complete control. Violation of this Subsection shall be based upon an official report of any public official.

B. Vehicle operations shall be conducted in accordance with all regulations as set forth by the U.S. Department of Transportation.

AUTHORITY NOTE: Promulgated in accordance with R.S. 40:1472.1 et seq.

HISTORICAL NOTE: Filed by the Department of Public Safety, Office of State Police, at the Office of the State Register, 1974, promulgated and amended LR 10:803 (October 1984), amended by the Department of Public Safety and Corrections, Office of State Police, Transportation and Environmental Safety Section, Explosive Control Unit, LR 22:1230 (December 1996).

§1527. Transportation of Explosives at Piers, Railway Stations, etc.

A. Operations pertaining to this Section shall be conducted in accordance with all regulations as set forth by the U.S. Department of Transportation.

AUTHORITY NOTE: Promulgated in accordance with R.S. 40:1472.1 et seq.

HISTORICAL NOTE: Filed by the Department of Public Safety, Office of State Police, at the Office of the State Register, 1974, promulgated and amended LR 10:803 (October 1984), amended by the Department of Public Safety and Corrections, Office of State Police, Transportation and Environmental Safety Section, Explosive Control Unit, LR 22:1230 (December 1996).

§1529. Transportation of Blasting Agents

A. The transportation of blasting agents shall be conducted in accordance with all regulations as set forth by the U.S. Department of Transportation.

AUTHORITY NOTE: Promulgated in accordance with R.S. 40:1472.1 et seq.

HISTORICAL NOTE: Filed by the Department of Public Safety, Office of State Police, at the Office of the State Register, 1974, promulgated and amended LR 10:803 (October 1984), amended by the Department of Public Safety and Corrections, Office of State Police, Transportation and Environmental Safety Section, Explosive Control Unit, LR 22:1230 (December 1996).

§1531. General Requirements

A. The handling of explosives shall be performed only by a person holding a valid and subsisting license to use explosives.

B. It is a violation of this Chapter for any person to engage in handling, touching, moving, etc., of explosives or to engage in the business of a manufacturer-distributor or dealer in explosives, or to acquire, sell, possess, store, or engage in the use of explosives in this state, unless that person possesses an appropriate license issued by the Deputy Secretary of Public Safety Services. Licensed geophysical contractors may contract with licensed drilling contractors to possess and use explosives for the sole purpose of executing the contract between the two parties. All explosives shall be returned to the licensed geophysical contractor at the end of each day. For purposes of this Section, the transfer of the temporary possession of explosives between the contracting parties shall not constitute a sale. The safety and security of the explosives and the compliance with these regulations shall be the responsibility of the party to the contract who is in possession of the explosives. There shall be no requirement that the drilling contractor be licensed by each geophysical contractor with whom he contracts.

C. If the employment of any licensed individual terminates, the company shall immediately notify the Office of the Deputy Secretary of Public Safety Services, Explosive Control Unit. The individual's original paper license and photo license will be retained by the company and returned to the Office of the Deputy Secretary of Public Safety Services, Explosive Control Unit, within three days. The company shall retain a copy of the terminated individual's paper license.

D. A user must not sell explosives to any person.

E. While explosives are being handled or used, smoking shall not be permitted and no one near the explosives shall possess matches, open lights or other fire or flame. No person shall handle or use explosives while under the influence of intoxicating liquors or narcotics.

F. Original shipping containers or Type 3 magazines shall be used for taking detonators and other explosives from storage magazines to the blasting area. Any materials employed in packing explosives shall not be burned in a stove, fireplace, or other confined space, or be used for any purpose.

G. When blasting is done in congested areas or in close proximity to a structure, railway, or highway or any other installation that may be damaged, the blast shall be covered before firing with a mat so constructed that it is capable of preventing fragments from being thrown. When such blasting is being carried out near a highway, the operator may, in lieu of using a mat, and with the permission of local authorities, block the road adjacent to the firing area while such firing is in progress. The Deputy Secretary of Public Safety Services must be notified in advance, and approval received, prior to this type of blasting operation being conducted.

H. Should there exist even a remote possibility of damage to private or public property in an area where blasting is being done, the user or the blaster must then keep an accurate blasting log for each blast. The blasting log shall record the job location, date, time of blast, weather conditions, type of blast, type of materials blasted, type of size cartridge of explosive used, number and diameter of holes, hole depth, and the total quantity of explosives fired instantaneously or by a delay interval. It shall be the user's or the blaster's responsibility to determine if the possibility of such damage exists.

I. Persons authorized to prepare explosive charges or conduct blasting operations shall use every reasonable precaution, which may include but is not limited to warning signals, flags, barricades, or blasting mats approved by the Deputy Secretary of Public Safety Services, to insure the safety of the general public and workmen.

J. Blasting operations, except by special permission of the Office of the Deputy Secretary of Public Safety Services, shall be conducted only during daylight hours, excepting underground mining operations, offshore operations, and wireline/tubing conveyed perforating operations.

K. Whenever blasting is being conducted in the vicinity of gas, electric, water, fire alarm, telephone, telegraph, and steam utilities, the user or the blaster shall notify the appropriate representative of such utilities at least 24 hours in advance of blasting, provided, however, in Seismic operations conducted in the presence of a Seismic Agent of the Louisiana Wildlife and Fisheries Commission, no such notice is necessary. Explosives shall not be detonated in congested areas or in close proximity to any structure, railway, highway, pier, dock, vessel, or other installation which may be damaged. In case of an electrical utility highline, care shall be taken to see that the total length of wire is kept too short to hit the electrical utility or that the wires are securely anchored to the ground so that the length of the wire that may be thrown by the explosion is less than the distance from the anchoring point to the utility. Further, should a firing line or a cap wire be thrown onto an electrical utility, a guard shall be posted and the utility called to remedy the situation.

L. Due precautions shall be taken to prevent accidental discharge of electric blasting caps from current induced by radar, radio transmitters, lightning, adjacent power lines, dust storms, or other resources of extraneous electricity. These precautions shall include:

1. the suspension of all blasting operations, and removal of persons from the blasting area during the approach and progress of an electrical storm. This Paragraph does not apply to underground mining operations;

2. with the exception of seismic off the road operations, the posting of signs warning against the use of mobile radio transmitters on all roads within 350 feet of the blasting operations, or as far away as practical;

3. compliance with the latest recommendations of the Institute of Makers of Explosives with regard to blasting in the vicinity of radio transmitters or power lines;

4. explosives or blasting equipment that are obviously deteriorated or damaged shall not be used; and

5. in seismic operations, when charges anchored in the hole misfire, there shall be no requirement that an attempt be made to remove such charge. An attempt to detonate this charge will be made with an additional priming charge. If this attempt to fire fails, blasting cap leads must be cut below the surface of the ground prior to leaving the hole.

M. Original equipment used in explosive operations shall be maintained in good working condition. Safety devices designed to ensure a safe working environment shall be in place and in proper working order.

N. Tamping shall be done only with wood rods without exposed metal parts. Non-sparking metal connectors may be used for jointed poles. Plastic tamping poles may be used provided they have been approved by the Office of the Deputy Secretary of Public Safety Services. Violent tamping shall be avoided.

O. After loading for a blast is completed all excess detonators and other explosives shall immediately be returned to their separate storage magazines unless they are promptly removed to another job site in accordance with transportation and storage rules provided herein.

AUTHORITY NOTE: Promulgated in accordance with R.S. 40:1472.1 et seq.

HISTORICAL NOTE: Adopted by the Department of Public Safety, Office of State Police, 1974, promulgated and amended LR 10:803 (October 1984), amended by the Department of Public Safety and Corrections, Office of State Police, Transportation and Environmental Safety Section, Explosive Control Unit, LR 22:1230 (December 1996), LR 24:106 (January 1998), amended by the Department of Public Safety and Corrections, Office of State Police, LR 26:91 (January 2000), LR 34:1038 (June 2008), LR 34:2676 (December 2008), LR 45:281 (February 2019).

§1533. Loading of Explosives in Blast Holes

A. All drill holes shall be sufficiently large to admit freely the insertion of the cartridges of explosives.

B. Tamping shall be done only with wood rods without exposed metal parts. Nonsparking metal connectors may be used for jointed poles. Plastic tamping poles may be used provided they have been approved by the Office of the Deputy Secretary of Public Safety Services. Violent tamping shall be avoided.

C. No hole shall be loaded except those to be fired in the next round of blasting. Seismographic operations shall follow this procedure wherever possible for maximum safety, but where practicality will not permit or where a seismic charge is anchored in the bottom of the hole, they are excepted from the provisions of this Subsection.

D. Drilling shall not be started until all remaining butts of old holes are examined for unexploded charges, and if any are found, they shall be refired by or under the direction of a competent and experienced person before work proceeds.

E. No person shall be allowed to deepen drill holes which have contained explosives.

F. After loading for a blast is completed, all excess detonators and other explosives shall immediately be returned to their separate storage magazines unless they are promptly removed to another job site in accordance with transportation and storage rules provided herein.

AUTHORITY NOTE: Promulgated in accordance with R.S. 40:1472.1 et seq.

HISTORICAL NOTE: Filed by the Department of Public Safety, Office of State Police, at the Office of the State Register, 1974, promulgated and amended LR 10:803 (October 1984), amended by the Department of Public Safety and Corrections, Office of State Police, Transportation and Environmental Safety Section, Explosive Control Unit, LR 22:1230 (December 1996).

§1535. Initiation of Explosive Charges

A. When fuse is used, the detonator shall be securely attached to the safety fuse with a standard ring-type cap

crimper. All primers shall be assembled at least 50 feet from any magazine.

B. Primers shall be made up only as required for each round of blasting.

C. No detonator shall be inserted in the explosives without first making a hole in the cartridge for the detonator with a non-sparking punch of proper size or with a standard cap crimper designed for the purpose.

D. If there are any misfires while using detonators and fuses, all persons shall remain away from the charge for at least 30 minutes. If there are any misfires while using electric detonators, all persons shall remain away from the charge for at least 15 minutes. Misfires shall be handled under the direction of the person in charge of the blasting and all wires shall be carefully traced and a search made for unexploded charges.

E. The blaster, when testing circuits to charged holes, shall use only blasting galvanometers designed for this purpose.

F. Only the person making lead wire connections in electrical firing shall control the firing of the shot. All connections shall be made from bore hole back to the source of firing current, and the lead wires shall remain shorted and not be connected to the blasting machine or other source of current until the charge is to be fired.

G. Before a blast is fired, an ample warning signal shall be given by the person in charge, who has made certain that all surplus explosives are in a safe place, all persons and vehicles are at a safe distance or under sufficient cover, and that an adequate warning has been given.

AUTHORITY NOTE: Promulgated in accordance with R.S. 40:1472.1 et seq.

HISTORICAL NOTE: Filed by the Department of Public Safety, Office of State Police, at the Office of the State Register, 1974, promulgated and amended LR 10:803 (October 1984), amended by the Department of Public Safety and Corrections, Office of State Police, Transportation and Environmental Safety Section, Explosive Control Unit, LR 22:1230 (December 1996).

§1537. Identification Numbers and Symbols

A. All explosives manufactured in this state or transported into this state for distribution or sale in this state shall be legibly identified by marking all explosive material. The marks required by this Section must identify the manufacturer and the location, date, and shift of manufacturer. The manufacturer shall place on each cartridge, bag, or other immediate container of explosives manufactured for sale or distribution the required mark which shall also be placed on the outside container, if any, used for their packaging.

AUTHORITY NOTE: Promulgated in accordance with R.S. 40:1472.1 et seq.

HISTORICAL NOTE: Filed by the Department of Public Safety, Office of State Police, at the Office of the State Register, 1974, promulgated and amended LR 10:803 (October 1984), amended by the Department of Public Safety and Corrections, Office of State Police, Transportation and Environmental Safety Section, Explosive Control Unit, LR 22:1230 (December 1996).

§1539. Investigative Reports

A. Any person investigating losses, thefts, illegal use, and/or possession of explosives, must immediately file a report to that effect with the Explosive Control Unit, Office of the Deputy Secretary of Public Safety Services in Baton Rouge, Louisiana.

AUTHORITY NOTE: Promulgated in accordance with R.S. 40:1472.1 et seq.

HISTORICAL NOTE: Filed by the Department of Public Safety, Office of State Police, at the Office of the State Register, 1974, promulgated and amended LR 10:803 (October 1984), amended by the Department of Public Safety and Corrections, Office of State Police, Transportation and Environmental Safety Section, Explosive Control Unit, LR 22:1230 (December 1996).

§1541. Training

A. All licensees must be trained in the areas outlined herein. Explosive blaster, user, manufacturer and or dealer distributor training shall include a minimum of 16 hours utilizing any combination of classroom and hands on practice in the use of explosives defined in §1541.D. Explosive handler training shall consist of 8 hours of classroom training defined in §1541.E.

1. All blaster, user, manufacturer and or dealer distributor licensees shall attend a minimum of 4 hours of annual refresher training utilizing any combination of classroom or hands on practice, in the use of explosives to include updates in §1541.D.6 and explosive safety procedures.

2. All explosive handler licensees shall attend a minimum of 4 hours of annual refresher training to include topics covered in §1541.E.2 and §1541.E.3.

B. Training records required in §1541.B.1 below must be maintained at the licensee's local office.

1. All training (initial and refresher) shall be documented on a form or certificate to include location, subject, date of instruction, and to include the instructor's signature, Louisiana Explosives' License Number and Bureau of Alcohol, Tobacco, Firearms and Explosives' License Number. The applicant shall submit the initial 16 hour training or 8 hour training documentation at the time of application for an explosives license.

2. In addition to §1541.B.1 above, the training provider shall also document training by a written examination. These training records shall be retained by the training provider.

C. Course instructors shall show documented proof of his or her knowledge, experience, and training in the field of explosives being taught as set forth in Subparagraph 1 below. Course instructors shall possess a current Louisiana Explosives' License in one of the following classes: blaster, user, manufacturer and or dealer distributor. In addition, instructors shall also be cleared by the Bureau of Alcohol, Tobacco, Firearms and Explosives as an Employee Possessor or Responsible Person for an ATF licensee or permittee. That license or permit is to relate to the field of instruction.

1. Instructor Qualifications. Qualification for instructors are as follows:

a. each instructor shall have a minimum of three years documented practical and/or field experience as a blaster, user, manufacturer and or dealer distributor or combination thereof;

b. written documentation shall include, but is not limited to, verifiable employment records, written job descriptions, certificates of training in the use and handling of explosives, or licensure by a governmental entity to use, handle, detonate or otherwise initiate explosives in its respective jurisdiction;

c. each instructor shall have a minimum of two years documented experience in a classroom environment, or other similar educational setting, as an instructor or educator. Written documentation shall include but is not limited to:

i. course curriculums;

ii. student rosters;

iii. copies of student certificates; and

iv. instructor development course certificates;

d. in the absence of any of the documentation required in Subparagraphs b and c of this Subsection, an applicant to be an instructor shall submit a notarized affidavit detailing his educational and practical experience which he believes meets the minimum qualifications specified above to be an instructor. Upon evaluation and acceptance by the deputy secretary, the applicant may be approved as an instructor in the area or areas that he is qualified to instruct; and

e. upon evaluation and acceptance by the deputy secretary, an applicant certified by the Mining Safety and Health Administration (MSHA) as an instructor in the field of explosives shall be determined suitable as an instructor pursuant to these rules limited to the field of underground mining.

D. Explosive Blaster, User, Manufacturer and or Dealer Distributor Course Topics (16 Hours)

1. Introduction to Explosives

a. Types of Explosives

b. Characteristics

c. Explosive Effects

2. Explosive Safety

a. Physical and Environmental Hazards

b. Misfire Procedures

c. Industry Specific Safety Procedures

3. Explosive Operations Planning

a. Site Preparation and Considerations

b. Industry Specifications

4. Explosive Firing Systems

a. Electric Firing

b. Non-Electric Firing

c. Shock Tube Firing

d. Priming Procedures

e. Blasting Accessories

f. Industry Specific Systems

5. Industrial Applications

6. Applicable Regulations Regarding Use, Transportation, Storage, and Disposal of Explosives

a. OSHA/MSHA Requirements

b. BATFE Requirements

c. DOT Requirements

d. EPA Requirements

e. State and Local Requirements

E. Explosive Handler Course Topics (8) hours

1. Introduction to Explosives

a. Types of Explosives

b. Characteristics of Explosives

c. Explosive Effects

2. Explosive Safety

a. Physical and Environmental Hazards

b. Industry Specific Safety Procedures

3. Explosive Rules and Regulations

a. State and Local Requirements

b. BATFE Requirements

c. OSHA/MSHA Requirements

d. EPA Requirements

e. Explosive Handler License Requirements and Restrictions

f. Transportation of Explosives

g. Storage of Explosives

h. Explosive Magazine Inventory

F. Training required under this Section is effective August 15, 2008.

AUTHORITY NOTE: Promulgated in accordance with R.S. 40:1472.1 et seq.

HISTORICAL NOTE: Adopted by the Department of Public Safety, Office of State Police, 1974, promulgated and amended LR 10:803 (October 1984), amended by the Department of Public Safety and Corrections, Office of State Police, Transportation and Environmental Safety Section, Explosive Control Unit, LR 22:1230 (December 1996), LR 24:106 (January 1998), amended by the

Department of Public Safety and Corrections, Office of State Police, LR 34:2676 (December 2008), LR 36:551 (March 2010).

§1543. Drug Testing Requirements

A. All holders of Louisiana Explosive Licenses shall meet the drug testing requirements of the U.S. Department of Transportation (DOT) as they apply to pre-employment, reasonable suspicion, and post accident testing.

B. Nothing in this regulation shall limit or prohibit any company from conducting a drug testing program that is more stringent than the DOT requirements.

C. Any company whose licensee employee refuses or fails any drug test shall notify the deputy secretary of the Department of Public Safety and Corrections, Explosives Control Unit of this fact.

D. All holders of Louisiana Explosives Licenses shall be drug-screened within 72 hours of employment or initial application for, or renewal of, an explosives license. The drug testing required by this Paragraph shall meet the same testing standards as tests required by Subsection A of this Section.

AUTHORITY NOTE: Promulgated in accordance with R.S. 40:1472.1 et seq.

HISTORICAL NOTE: Adopted by the Department of Public Safety, Office of State Police, at the Office of State Police, 1974, promulgated and amended LR 10:803 (October 1984), amended by the Department of Public Safety and Corrections, Office of State Police, Transportation and Environmental Safety Section, Explosive Control Unit, LR 22:1230 (December 1996), LR 24:106 (January 1998), amended by the Department of Public Safety and Corrections, Office of State Police, LR 34:2677 (December 2008), LR 35:491 (March 2009), LR 36:552 (March 2010).

Subchapter B. Appendices

§1545. Appendix A—Table 1, American Table of Distances for Storage of Explosive Materials

TABLE 1

AMERICAN TABLE OF DISTANCES FOR STORAGE OF EXPLOSIVE MATERIALS

As Revised and Approved by The Institute of Makers of Explosives—June 1991

DISTANCES IN FEET

Explosives		Inhabited Buildings		Public Highways Class A to D		Passenger Railways—Public Highways with Traffic Volume of more than 3,000 Vehicles/Day		Separation of Magazines	
Pounds Over	Pounds Not Over	Barricaded	Unbarricaded	Barricaded	Unbarricaded	Barricaded	Unbarricaded	Barricaded	Unbarricaded
2	5	70	140	30	60	51	102	6	12
5	10	90	180	35	70	64	128	8	16
10	20	110	220	45	90	81	162	10	20
20	30	125	250	50	100	93	186	11	22
30	40	140	280	55	110	103	206	12	24
40	50	150	300	60	120	110	220	14	28
50	75	170	340	70	140	127	254	15	30
75	100	190	380	75	150	139	278	16	32
100	125	200	400	80	160	150	300	18	36
125	150	215	430	85	170	159	318	19	38
150	200	235	470	95	190	175	350	21	42
200	250	255	510	105	210	189	378	23	46
250	300	270	540	110	220	201	402	24	48
300	400	295	590	120	240	221	442	27	54
400	500	320	640	130	260	238	476	29	58
500	600	340	680	135	270	253	506	31	62
600	700	355	710	145	290	266	532	32	64
700	800	375	750	150	300	278	556	33	66
800	900	390	780	155	310	289	578	35	70
900	1,000	400	800	160	320	300	600	36	72
1,000	1,200	425	850	165	330	318	636	39	78
1,200	1,400	450	900	170	340	336	672	41	82
1,400	1,600	470	940	175	350	351	702	43	86
1,600	1,800	490	980	180	360	366	732	44	88
1,800	2,000	505	1,010	185	370	378	756	45	90
2,000	2,500	545	1,090	190	380	408	816	49	98
2,500	3,000	580	1,160	195	390	432	864	52	104
3,000	4,000	635	1,270	210	420	474	948	58	116
4,000	5,000	685	1,370	225	450	513	1,026	61	122
5,000	6,000	730	1,460	235	470	546	1,092	65	130
6,000	7,000	770	1,540	245	490	573	1,146	68	136
7,000	8,000	800	1,600	250	500	600	1,200	72	144
8,000	9,000	835	1,670	255	510	624	1,248	75	150
9,000	10,000	865	1,730	260	520	645	1,290	78	156
10,000	12,000	875	1,750	270	540	687	1,374	82	164
12,000	14,000	885	1,770	275	550	723	1,446	87	174
14,000	16,000	900	1,800	280	560	756	1,512	90	180
16,000	18,000	940	1,880	285	570	786	1,572	94	188
18,000	20,000	975	1,950	290	580	813	1,626	98	196
20,000	25,000	1,055	2,000	315	630	876	1,752	105	210
25,000	30,000	1,130	2,000	340	680	933	1,866	112	224
30,000	35,000	1,205	2,000	360	720	981	1,962	119	238
35,000	40,000	1,275	2,000	380	760	1,026	2,000	124	248
40,000	45,000	1,340	2,000	400	800	1,068	2,000	129	258
45,000	50,000	1,400	2,000	420	840	1,104	2,000	135	270
50,000	55,000	1,460	2,000	440	880	1,140	2,000	140	280
55,000	60,000	1,515	2,000	455	910	1,173	2,000	145	290
60,000	65,000	1,565	2,000	470	940	1,206	2,000	150	300
65,000	70,000	1,610	2,000	485	970	1,236	2,000	155	310
70,000	75,000	1,655	2,000	500	1,000	1,263	2,000	160	320
75,000	80,000	1,695	2,000	510	1,020	1,293	2,000	165	330
80,000	85,000	1,730	2,000	520	1,040	1,317	2,000	170	340
85,000	90,000	1,760	2,000	530	1,060	1,344	2,000	175	350
90,000	95,000	1,790	2,000	540	1,080	1,368	2,000	180	360
95,000	100,000	1,815	2,000	545	1,090	1,392	2,000	185	370
100,000	110,000	1,835	2,000	550	1,100	1,437	2,000	195	390
110,000	120,000	1,855	2,000	555	1,110	1,479	2,000	205	410
120,000	130,000	1,875	2,000	560	1,120	1,521	2,000	215	430
130,000	140,000	1,890	2,000	565	1,130	1,557	2,000	225	450
140,000	150,000	1,900	2,000	570	1,140	1,593	2,000	235	470
150,000	160,000	1,935	2,000	580	1,160	1,629	2,000	245	490
160,000	170,000	1,965	2,000	590	1,180	1,662	2,000	255	510
170,000	180,000	1,990	2,000	600	1,200	1,695	2,000	265	530
180,000	190,000	2,010	2,010	605	1,210	1,725	2,000	275	550
190,000	200,000	2,030	2,030	610	1,220	1,755	2,000	285	570
200,000	210,000	2,055	2,055	620	1,240	1,782	2,000	295	590
210,000	230,000	2,100	2,100	635	1,270	1,836	2,000	315	630
230,000	250,000	2,155	2,155	650	1,300	1,890	2,000	335	670
250,000	275,000	2,215	2,215	670	1,340	1,950	2,000	360	[illegible]
275,000	300,000	2,275	2,275	690	1,380	2,000	2,000	385	770

Explanatory Notes Essential to the Application of the American Table of Distances for Storage of Explosive Materials

Note 1—*Explosive Materials* means explosives, blasting agents and detonators.

Note 2—*Explosives* means any chemical compound, mixture, or device, the primary or common purpose of which is to function by explosion. A list of explosives determined to be within the coverage of "18 U.S.C. Chapter 40, Importation, Manufacturer, Distribution and Storage of Explosive Materials" is issued at least annually by the Director of the Bureau of Alcohol, Tobacco and Firearms of the Department of the Treasury. For quantity and distance purposes, detonating cord of 50 grains per foot should be calculated as equivalent to 8 lbs. of high explosives per 1,000 feet. Heavier or lighter core loads should be rated proportionately.

Note 3—*Blasting Agents* means any material or mixture, consisting of fuel and oxidizer, intended for blasting, not otherwise defined as an explosive: Provided, That the finished product, as mixed for use or shipment, cannot be detonated by means of a No. 8 test blasting cap when unconfined.

Note 4—*Detonator* means any device containing any initiating or primary explosive that is used for initiating detonation. A detonator may not contain more than 10 grams of total explosives by weight, excluding ignition or delay charges. The term includes, but is not limited to, electric blasting caps of instantaneous and delay types, blasting caps for use with safety fuses, detonating cord delay connectors, and nonelectric instantaneous and delay blasting caps which use detonating cord, shock tube, or any other replacement for electric leg wires. All types of detonators in strengths through No. 8 cap should be rated at 1 1/2 lbs. of explosives per 1,000 caps. For strengths higher than No. 8 cap, consult the manufacturer.

Note 5—*Magazine* means any building, structure, or container, other than an explosives manufacturing building, approved for the storage of explosive materials.

Note 6—*Natural Barricade* means natural features of the ground, such as hills, or timber of sufficient density that the surrounding exposures which require protection cannot be seen from the magazine when the trees are bare of leaves.

Note 7—*Artificial Barricade* means an artificial mound or riveted wall of earth of a minimum thickness of 3 feet.

Note 8—*Barricaded* means the effective screening of a building containing explosive materials from the magazine or other building, railway, or highway by a natural or an artificial barrier. A straight line from the top of any sidewall of the building containing explosive materials to the eave line of any magazine or other building or to a point 12 feet above the center of a railway or highway shall pass through such barrier.

Note 9—*Inhabited Building* means a building regularly occupied in whole or part as a habitation for human beings, or any church, schoolhouse, railroad station, store, or other structure where people are accustomed to assemble, except any building or structure occupied in connection with the manufacture, transportation, storage or use of explosive materials.

Note 10—*Railway* means any steam, electric, or other railroad or railway which carriers passengers for hire.

Note 11—*Highway* means any public street, public alley, or public road.

Note 12—When two or more storage magazines are located on the same property, each magazine must comply with the minimum distances specified from inhabited buildings, railways, and highways, and, in addition, they should be separated from each other by not less than the distances shown for "Separation of Magazines", except that the quantity of explosive materials contained in detonator magazines shall govern in regard to the spacing of said detonator magazines from magazines containing other explosive materials. If any two or more magazines are separated from each other by less than the specified "Separation of Magazines" distances, then such two or more magazines, as a group, must be considered as one magazine, and the total quantity of explosive materials stored in such group must be treated as if stored in a single magazine located on the site of any magazine of the group, and must comply with the minimum of distances specified from other magazines, inhabited buildings, railways, and highways.

Note 13—Storage in excess of 300,000 lbs. of explosive materials, in one magazine is generally not required for commercial enterprises.

Note 14—This Table applies only to the manufacture and permanent storage of commercial explosive materials. It is not applicable to transportation of explosives or any handling or temporary storage necessary or incident thereto. It is not intended to apply to bombs, projectiles, or other heavily encased explosives.

Note 15—When a manufacturing building on an explosive materials plant site is designed to contain explosive materials, such building shall be located from inhabited buildings, public highways and passenger railways in accordance with the American Table of Distances based on the maximum quantity of explosive materials permitted to be in the building at one time.

American Table of Distances

The American Table of Distances applied to the manufacture and permanent storage of commercial explosive materials. The distances specified are those measured from the explosive materials storage facility to the inhabited building, highway or passenger railway, irrespective of property lines.

The American Table of Distances covers all commercial explosive materials, including, but not limited to, high explosives, blasting agents, detonators, initiating systems and explosives materials in process. The Table is not designed to be altered or adjusted to accommodate varying explosive characteristics such as blast effect, weight strength, density, bulk strength, detonation velocity, etc.

The American Table of Distances should not be used to determine safe distances for blasting work, the firing of explosive charges for testing or quality control work, or the open detonation of waste explosive materials. The American Table of Distances may be utilized as a guide for developing distances for the unconfined, open burning of waste explosive materials where the probability of transition from burning to high order detonation is improbably.

AUTHORITY NOTE: Promulgated in accordance with R.S. 40:1472.1 et seq.

HISTORICAL NOTE: Adopted by the Department of Public Safety and Corrections, Office of State Police, Transportation and Environmental Safety Section, Explosive Control Unit, LR 22:1230 (December 1996).

§1547. Appendix B—Table 2, Table of Recommended Separation Distances of Ammonium Nitrate and Blasting Agents from Explosives or Blasting Agents

TABLE 2

TABLE OF RECOMMENDED SEPARATION DISTANCES OF AMMONIUM NITRATE AND BLASTING AGENTS FROM EXPLOSIVES OR BLASTING AGENTS[1,6]

Donor Weight		*Minimum Separation Distance of Acceptor when Barricaded*[2] *(ft.)*		*Minimum Thickness of Artificial Barricades*[5] *(in.)*
Pounds Over	*Pounds Not Over*	*Ammonium Nitrate*[3]	*Blasting Agent*[4]	
	100	3	11	12
100	300	4	14	12
300	600	5	18	12
600	1,000	6	22	12
1,000	1,600	7	25	12
1,600	2,000	8	29	12
2,000	3,000	9	32	15
3,000	4,000	10	36	15
4,000	6,000	11	40	15
6,000	8,000	12	43	20
8,000	10,000	13	47	20
10,000	12,000	14	50	20
12,000	16,000	15	54	25
16,000	20,000	16	58	25
20,000	25,000	18	65	25
25,000	30,000	19	68	30
30,000	35,000	20	72	30
35,000	40,000	21	76	30
40,000	45,000	22	79	35
45,000	50,000	23	83	35
50,000	55,000	24	86	35
55,000	60,000	25	90	35
60,000	70,000	26	94	40
70,000	80,000	28	101	40
80,000	90,000	30	108	40
90,000	100,000	32	115	40
100,000	120,000	34	122	50
120,000	140,000	37	133	50
140,000	160,000	40	144	50
160,000	180,000	44	158	50
180,000	200,000	48	173	50
200,000	220,000	52	187	60
220,000	250,000	56	202	60
250,000	275,000	60	216	60
275,000	300,000	64	230	60

Notes to Table of Recommended Separation Distances of Ammonium Nitrate and Blasting Agents from Explosives or Blasting Agents

Note 1—Recommended separation distances to prevent explosion of ammonium nitrate and ammonium nitrate-based blasting agents by propagation from nearby stores of high explosives or blasting agents referred to in the Table as the "donor." Ammonium nitrate, by itself, is not considered to be a donor when applying this Table. Ammonium nitrate, ammonium nitrate-fuel oil or combinations thereof are acceptors. If stores of ammonium nitrate are located within the sympathetic detonation distance of explosives or blasting agents, one-half the mass of ammonium nitrate should be included in the mass of the donor.

Note 2—When the ammonium nitrate and/or blasting agent is not barricaded, the distances shown in the Table shall be multiplied by six. These distances allow for the possibility of high velocity metal fragments from mixers, hoppers, truck bodies, sheet metal structures, metal containers, and the like which may enclose the "donor". Where storage is in bullet-resistant magazines[1] recommended for explosives or where the storage is protected by a bullet-resistant wall, distances and barricade thicknesses in excess of those prescribed in the American Table of Distances are not required.

Note 3—The distances in the Table apply to ammonium nitrate that passes the insensitivity test prescribed in the definition of ammonium nitrate fertilizer promulgated by the Fertilizer Institute;[2] and ammonium nitrate failing to pass said test shall be stored at separation distances determined by competent persons and approved by the authority having jurisdiction.

Note 4—These distances apply to blasting agents which pass the insensitivity test prescribed in regulations of the U.S. Department of Transportation and the U.S. Department of the Treasury, Bureau of Alcohol, Tobacco and Firearms.

Note 5—Earth, or sand dikes, or enclosures filled with the prescribed minimum thickness of earth or sand are acceptable artificial barricades. Natural barricades, such as hills or timber of sufficient density that the surrounding exposures which require protection cannot be seen from the "donor" when the trees are bare of leaves, are also acceptable.

Note 6—For determining the distances to be maintained from inhabited buildings, passenger railways, and public highways, use the American Table of Distances for Storage of Explosives Materials.

[1]For construction of bullet-resistant magazines see Bureau of Alcohol, Tobacco and Firearms, Department of the Treasury, Publication ATF P 5400.7 (6/90), ATF-Explosives Law and Regulations.

[2]Definition and Test Procedures for Ammonium Nitrate Fertilizer, Fertilizer Institute, May 8, 1971.

AUTHORITY NOTE: Promulgated in accordance with R.S. 40:1472.1 et seq.

HISTORICAL NOTE: Adopted by the Department of Public Safety and Corrections, Office of State Police, Transportation and Environmental Safety Section, Explosive Control Unit, LR 22:1230 (December 1996).

§1549. Appendix C—Table 3, Storage in Magazines and Classification and Use of Magazines

TABLE 3

Storage in Magazines	Magazine Types				
	1	2	3	4	5
High Explosives (1.1D) (Class A explosives) including dynamites; cap sensitive emulsions; slurries, and watergels; cast boosters.	X	X	X		
Black Powder (1.1D) (Class A explosives). Defined as low explosive by the BATF for storage.	X	X	X	X	
Detonators (1.1B) (Class A explosives).	X	X	X		
Detonating Cords (1.1D; 1.2D, 1.4G) (Class A or C explosive).	X	X	X		
Detonators (1.4B; 1.4S) (Class C explosive).	X	X	X	X	
Safety fuse, electric squibs, igniters and igniter cord (1.4G; 1.4S).	X	X	X	X	
Blasting Agents (1.5D) (Blasting Agents).	X	X	X	X	X
Propellants (1.3C) (Class B explosives) Defined as low explosive by the BATF for storage.	X	X	X	X	

Note: Detonators are not to be stored in the same magazine with other explosive materials.

EXCEPTION: Detonators which are not mass detonating may be stored with safety fuse, electric squibs, igniters or igniter cord in Type 1, 2, 3 or 4 magazines.

Classification and Use of Magazines	Magazine Types				
Construction Features	1	2	3	4	5
Permanent	X			X	X
Portable		X	X	X	X
Bullet-Resistant	X	X			
Fire-Resistant	X	X	X	X[2]	X[2]
Theft-Resistant	X	X	X	X	X[1]
Weather-Resistant	X	X	X	X	X
Ventilated	X	X	X	X[2]	X[2]

Notes: [1] Each door of a Mobile Type 5 magazine shall be equipped with at least one 5-tumbler padlock having a 3/8-inch (9.5 mm) case-hardened shackle. The lock need not be hooded.

[2] Over-the-road trucks or semi-trailers used for temporary storage as Type 4 or 5 magazines need not be fire-resistant or ventilated.

AUTHORITY NOTE: Promulgated in accordance with R.S. 40:1472.1 et seq.

HISTORICAL NOTE: Adopted by the Department of Public Safety and Corrections, Office of State Police, Transportation and Environmental Safety Section, Explosive Control Unit, LR 22:1230 (December 1996).

Chapter 19. Towing, Recovery, and Storage

Subchapter A. Authority, Exemptions, Definitions, Scope

§1901. Authority

A. The 1989 Legislature passed the Louisiana Towing and Storage Act in order to regulate persons and businesses engaged in towing and/or storing of vehicles in Louisiana. The act provides that the Department of Public Safety and Corrections, Public Safety Services, Office of State Police shall be the regulating agency. The Office of State Police (hereinafter referred to as the department) has authority in the effective regulation of Louisiana towing and storage businesses.

B. These rules shall apply to any person or entity engaged in the business of towing, recovery or storage of vehicles in Louisiana, either for direct or indirect compensation as defined by law.

C. The deputy secretary, or his designee, may grant, by written order, alternate means of compliance to these rules.

D. These Rules are promulgated in accordance with R.S. 32:1711 et seq.

AUTHORITY NOTE: Promulgated in accordance with R.S. 32:1714.

HISTORICAL NOTE: Promulgated by the Department of Public Safety and Corrections, Office of the State Police, LR 32:853 (May 2006).

§1903. Exemptions

A. These rules shall not apply to:

1. car haulers licensed with interstate operating authority capable of carrying five or more vehicles;

2. tow trucks owned by a governmental entity and not used for commercial purposes;

3. tow trucks registered and domiciled in other states with applicable interstate operating authority, operating solely in interstate commerce;

4. tow trucks transporting vehicles that are currently owned by the same tow company and ownership is supported by possession of a title, bill of sale, registration or other legal document while transported and the tow vehicle is permanently and prominently marked on both side in lettering at least 2 1/2 inches in height and 1/4 inch in width with the company's legal name, city and "NOT FOR HIRE;" or

5. tow trucks owned and operated by garages, automotive mechanic shop owners, or other places where vehicles are repaired that solely tow vehicles for the purposes of maintenance or repair at their facility. Such businesses must:

a. maintain insurance coverage as required by this Chapter;

b. license their tow trucks in accordance with this Chapter;

c. not respond to any crash or disabled vehicle scenes, participate in police rotation systems, conduct private property tows nor conduct non consensual tows;

d. not offer towing or tow-related services for direct or indirect compensation or store any vehicles, as defined by law; and

e. ensure tow trucks are permanently and prominently marked on both side in lettering at least 2 1/2 inches in height and 1/4 inch in width with the company's legal name, city and "NOT FOR HIRE."

AUTHORITY NOTE: Promulgated in accordance with R.S. 32:1714.

HISTORICAL NOTE: Promulgated by the Department of Public Safety and Corrections, Office of the State Police, LR 32:853 (May 2006), amended LR 36:2575 (November 2010).

§1905. Definitions

A. The definitions found in the Louisiana Highway Regulatory Act, specifically R.S. 32:1 and the Towing and Storage Act, specifically, R.S. 32:1711 et seq., are applicable to these rules and shall have the same meaning indicated unless the context clearly indicates otherwise.

Authorized Agent—a suitable company authorized by the department in accordance with this Chapter to process and exchange the Official Report of Stored Vehicle information.

Automobile Liability Coverage—insurance which covers damage to property and/or personal injury to third parties.

Deputy Secretary—the deputy secretary of the Department of Public Safety and Corrections, Public Safety Services.

Garage Keepers Legal Liability Insurance—insurance which provides coverage to owners of storage facilities, garages, parking lots, body and repair shops, etc., for liability as bailees with respect to damage or loss to vehicles and contents left in their custody for safe keeping or repair.

Garage Liability Insurance—liability insurance covering storage facilities, automobile dealers, garages, repair shops, and service stations against claims of bodily injury and property damage that may arise through operation of such businesses.

Gross Combination Weight Rating (GCWR)—the value specified by the manufacturer as the loaded weight of a combination (articulated) motor vehicle. In the absence of a value specified by the manufacturer, GCWR will be determined by adding the GVWR of the power unit and the total weight of the towed unit and any load thereon.

Gross Vehicle Weight Rating (GVWR)—the value specified by the manufacturer as the loaded weight of a single motor vehicle.

Law Enforcement Hold—a hold placed on a specific vehicle by a law enforcement agency due that vehicle's evidentiary value in an active investigation.

License Holder—shall include, but not be limited to, a tow truck operator, towing service, storage facility or other entity requiring licensure pursuant to this Chapter.

Non-Consensual Storage—the storage or possession of a vehicle by an individual or storage facility operator without prior consent or authorization of the vehicle's owner or operator for the purpose of charging fees or obtaining ownership. Prior consent or authorization shall be documented by the storage facility by providing a written storage contract as outlined in R.S. 32:1722(C).

Non-Consensual Towing—the movement or transportation of a vehicle by a tow truck without the prior consent or authorization of the owner or operator of the vehicle. This includes private property tows conducted in accordance with the provisions of R.S. 32:1736 and tows by law enforcement or other public agencies. Whenever an owner or operator of a vehicle requests a law enforcement officer or other public agency to initiate a tow, such tow shall be considered non-consensual and subject to Louisiana Public Service Commission tow rates.

Offending Vehicle—the tow truck for which a violation of law, rule or regulation has been cited by the department and a administrative penalty has been assessed.

Offense—shall be synonymous with violation and mean any infraction of law, rule or regulation promulgated in accordance with this Chapter.

On-Hook/In Tow Coverage—insurance specifically covering tow truck operators when engaged in the recovery, towing or transporting of a vehicle.

Owner—the last registered owner of a vehicle as shown on the records of the Office of Motor Vehicles and/or the holder of any lien on a vehicle as shown on the records of the Office of Motor Vehicles and/or any other person who has a documented ownership interest in a vehicle.

Place of Business—a permanent structure located within Louisiana used for business, staffed during regular business hours, equipped with phone and utility services including water, sewer, and electric, and houses records and other appropriate or required documents.

Responsible Party—the principal person or business that is civilly liable or criminally culpable for the occurrence or commission of a violation of law, rule or regulation.

Storage Area—an approved building, structure, yard, or enclosure used for the purposes of storing vehicles in Louisiana.

Storage Facility—any business or company that receives direct or indirect compensation for storing vehicles in Louisiana.

Tow Truck—any motor vehicle equipped with a boom or booms, winches, slings, tilt beds, semi-trailers, and/or similar equipment designed for the towing and/or recovery of vehicles and other objects which cannot operate under their own power or for some reason must be transported by means of towing.

AUTHORITY NOTE: Promulgated in accordance with R.S. 32:1714.

HISTORICAL NOTE: Promulgated by the Department of Public Safety and Corrections, Office of the State Police, LR 32:854 (May 2006), amended LR 36:2575 (November 2010), LR 40:797 (April 2014).

§1907. Administrative Penalty Assessment; Arbitration; Recovery of Penalties

A. Administrative Penalty Assessment

1. A tow truck owner or operator, an employee or the agent of a tow truck owner or operator, a storage facility owner or operator, an employee or the agent of a storage facility owner or operator, determined by the department to have committed a violation of R.S. 32:1711 et seq., or adopted and promulgated regulations as provided in this Chapter, is subject to legal sanctions being imposed against them. Legal sanctions shall include, but are not limited to, administrative civil penalties, warnings, and suspension and/or revocation of the operator's license, storage inspection license, tow truck license plate.

2. The department shall issue a citation or inspection report for violations of law, rule or regulation which shall specify the offense committed. The citation or inspection report shall provide for the payment of an administrative penalty to the department in an amount prescribed by the department or if a suspension or revocation is being imposed, specify the duration of said suspension or revocation. The penalty shall be paid or imposed within 45 days of issuance and mailing, by first class mail, of the initial notice of violation, unless within that period the person to whom the citation is issued files a written request for an administrative hearing within the 45 days.

3. All assessed and adjudicated administrative penalties and fees shall be paid to the department and deposited in the towing and storage fund.

4. Schedule of Fines

Schedule of Fines	
The following range of fines will be set for violations cited under the corresponding sections. When citing specific violations, the department will set the fine within the corresponding range.	
Exemptions and Other Laws (§1903, 1905, and §1909)	$50-$500
Code of Conduct (§1911)	$100-$500
Tow Truck License Plate (§1913)	$50-$500
Insurance Requirements (§1915)	$50-$500
Driver's License Required Skills (§1917)	$50-$500
Tow Truck Lighting; Equipment (§1919)	$25-$100
Required Equipment (§1921)	$25-$100
Capacities of Tow Equipment (§1923)	$100-$500
Tow Truck Load Limitations (§1925)	$100-$500
Inspections by the Department (§1927)	$100-$500
Towing Service to Use Due Care (§1929)	$100-$500

Schedule of Fines	
The following range of fines will be set for violations cited under the corresponding sections. When citing specific violations, the department will set the fine within the corresponding range.	
Vehicles Towed from Private Prop. (§1930)	$200-$500
Storage Facility; Licensing Requirements (§1931)	$100-$500
Requirements for ORSV (§1933)	$100-$500
Owner Notification of Stored Vehicle (§1935)	$100-$500
Administrative Fees (§1937)	$100-$500
Permits to Sell and Dismantle (§1939)	$100-$500
Towing/Storage Facilities Requirement (§1941)	$50-$500
Storage Rates (§1943)	$100-$500
Gate Fees (§1945)	$100-$500
Law Enforcement Rotation Lists (§1947)	$50-$500

5. Effective December 1, 2019, the suspension of a storage license may be imposed on a third or subsequent violation of the same administrative rule or regulation by a towing or storage facility, its owner, or its employee within a two-year period. Suspensions shall not exceed 30 days, except as provided for in R.S. 49:961(C). Violations of these rules or the Towing and Storage Act during the suspension or a violation of the terms of the suspension shall result in an automatic separate suspension of the storage license. The suspension of a storage license may also be imposed when a towing or storage facility fails to meet the requirements for the issuance of a storage license.

6. Effective December 1, 2019, the revocation of a storage license may be imposed when a storage facility has been issued three or more suspensions.

B. Administrative Hearings

1. A tow truck owner or tow truck operator or a storage facility owner or operator may submit a written request for an administrative hearing within 45 calendar days of the issuance of the initial notice of violation, suspension or revocation.

2. Hearing requests shall be adjudged in accordance with the Administrative Procedure Act.

3. Failure to submit a written request to the department for an administrative hearing within 45 days from the date of the initial notice of violation, suspension, or revocation; or requesting a hearing, being notified by mail and failing to appear at the scheduled hearing date and location shall constitute a default and the violations, suspension or revocation shall become finally affirmed.

4. In such cases, on or after the forty-sixth day the department shall inform the responsible party by first class mail of the conviction and that he has 30 days from the date of this notice to pay the penalty or the Office of Motor Vehicles shall suspend his driver's license and/or vehicle registration. Suspending the vehicle registration shall mean any registration transaction, including renewal, may be denied.

5. For the purpose of this Part, removal from the Louisiana State Police tow truck rotation list shall not constitute a department action subject to review under Subsection B of this Section. Placement on the Louisiana State Police rotation list is a privilege, not a right. Any tow truck owner may submit a written appeal to the region major requesting a review of an investigation and/or suspension. Review hearings will be held within 10 business days, after a request is made.

C. Forfeiture of Claims

1. Any person who fails to comply with any provision required by these rules and regulations shall be subject to the forfeiture of all claims for monetary charges relating to towing, recovery and storage of the respective vehicle(s), including, but not limited to, the imposition of administrative penalties.

D. Recovery of Administrative Penalties

1. The department in an attempt to recover administrative penalties, may, at its discretion:

a. order the removal of the offending vehicle's license plate or request the Office of Motor Vehicles (OMV) deny the renewal of the offending vehicle's registration, or both:

i. a tow truck license plate removed or denied renewal pursuant to this Part may only be reinstated upon receipt of payment of fines and fees owed the department;

b. recommend the suspension or deny the renewal of a responsible party's driver license, or both:

i. a driver license suspended pursuant to this Part may only be reinstated upon receipt of payment of fines and fees owed the department;

c. order the vehicles of responsible parties not registered in Louisiana be seized until outstanding fines and fees are paid.

2. These actions are not punitive and used only as a mechanism to garner payment of monies lawfully owed the department.

AUTHORITY NOTE: Promulgated in accordance with R.S. 32:1714.

HISTORICAL NOTE: Promulgated by the Department of Public Safety and Corrections, Office of the State Police, LR 32:854 (May 2006), amended LR 35:2201 (October 2009), LR 36:2576 (November 2010), LR 40:797 (April 2014), LR 45:1604 (November 2019).

§1909. Relationship to Other Laws and Regulations

A. Every tow truck operator, towing or storage facility, employees or agents of a towing or storage facility, subject to or licensed in accordance with this Chapter shall comply with the laws of Louisiana, Federal Motor Carrier Safety Regulations, Federal Hazardous Materials Regulations, specifically, 49 CFR Parts 100 through 399, if applicable, and rules promulgated herein. None of the rules contained herein shall exempt a tow truck operator, towing or storage facility, its employees or agents from complying with law, rule or regulation.

B. Each day's failure to comply with these rules shall constitute a separate offense.

AUTHORITY NOTE: Promulgated in accordance with R.S. 32:1714.

HISTORICAL NOTE: Promulgated by the Department of Public Safety and Corrections, Office of the State Police, LR 32:855 (May 2006).

§1911. Code of Conduct

A. Adherence to Law, Rule or Regulation

1. A violation of the provisions of the Towing and Storage Act shall also constitute a violation of these rules.

2. Tow truck operators, towing services, storage facilities, their employees or agents shall comply with applicable federal and state laws, rules and regulations.

B. Dutiful Conduct

1. No tow truck operator, towing service, storage facility, their employees or agents, shall engage in unsuitable conduct or practices as described in this section or shall have a business association with any person which engages in unsuitable practices.

2. For the purposes of this Section, unsuitable conduct or practices shall include the following:

a. overcharging or charging for services not rendered;

b. misrepresentation of any material fact to the department or its officers;

c. obstructing or impeding the lawful activities of the department or its officers acting in their official capacity;

d. false or fictitious statements in any report, application, form or other document presented to the department, including, but not limited to, notarized documents required by this Chapter;

e. conviction of a felony relating to auto theft, vehicle insurance fraud, burglary of a vehicle, and/or possession of stolen vehicles or vehicle parts; and

f. any impairment of an alcoholic beverage, narcotic or controlled dangerous substance when operating a tow truck:

i. impairment shall mean the tow truck operator's blood alcohol concentration is 0.02 percent or more by weight base on grams of alcohol per 100 cubic centimeters of blood or the operator uses or is under the influence of a controlled dangerous substance;

ii. tow truck operators shall submit to chemical testing when required by an officer of the department; and

iii. every owner or operator shall ensure there is no presence of an alcoholic beverage, narcotic, or controlled dangerous substance within the tow truck.

C. Prohibited Business Practices

1. Stopping at the Scene of a Crash

a. The operator of a tow truck, towing service, employee or agent, shall not stop at the scene of a motor vehicle crash, disabled, or unattended vehicle for the purpose of soliciting business, either directly or indirectly; unless the owner or operator of said vehicle has specifically summoned the tow company or its employees or agents to such scene for towing or recovery purposes, or has been called to the scene by a law enforcement officer or agency pursuant to that agency's official duty and authority. This prohibition shall also include first responders utilizing tow vehicle as transportation to and from the scene of emergencies.

2. Moving a Vehicle Involved in a Crash

a. Tow truck operators and towing services shall not, without the express authorization of the investigating law enforcement agency, move any vehicle from a public highway or street or from any public property when such vehicle is abandoned, stolen, damaged in a crash, or left unattended.

b. Tow truck operators or towing services may, in emergency cases, move a vehicle damaged as the result of a crash, without the express authorization of the investigating law enforcement agency, when the movement of the vehicle is to extract a person from the wreckage or to remove an immediate hazard to life or property. In either event, the movement of the vehicle shall be no more than necessary to accomplish the purpose of the move and the movement shall be reported immediately to the investigating agency.

3. Reception of Police Radio Communications

a. Tow truck operators or towing services shall not use, or permit the use of, any communications devices capable of receiving police radio traffic, except two-way radios equipped with only the agency frequencies currently used and authorized by the head of a law enforcement agency within their jurisdiction.

4. Tow Trucks Shall Not Be Emergency Vehicles

a. Tow trucks, tow truck operators or towing services shall not install, equip, posses or permit the use of sirens, non-amber colored emergency warning lights, emergency flashing headlights or any other warning system customarily equipped on emergency vehicles for the purpose of moving traffic out of the way of an approaching emergency vehicle.

5. Vehicle Staging or Transfer

a. The operator of a tow truck, towing service, employee or agent shall not tow any vehicle to any location other than that company’s licensed storage facility without prior authorization of that vehicle’s owner.

b. Vehicles shall not be towed from their original location to a secondary location for the purpose of transfer to another tow truck unless the primary tow truck has become disabled and cannot complete the tow. In this case the primary tow truck an it’s driver must wait with the towed vehicle until a second tow truck arrives to complete the tow.

AUTHORITY NOTE: Promulgated in accordance with R.S. 32:1714.

HISTORICAL NOTE: Promulgated by the Department of Public Safety and Corrections, Office of the State Police, LR 32:855 (May 2006), LR 36:2579 (November 2010).

Subchapter B. Tow Truck License Plate; Required Insurance

§1913. Tow Truck License Plate

A. Application

1. Applications shall be made to the Department of Public Safety and Corrections, in writing, upon forms prescribed and furnished by the department. Applications shall be complete, accurate and contain all required information. A non-refundable or transferable fee of $150, in addition to other required fees, must be submitted with each Louisiana tow truck license plate application. Fees shall be tendered to the Office of Motor Vehicles, P.O. Box 64886, Baton Rouge, LA 70896.

a. Car carrier companies which transport less than five motor vehicles and do not store or hold motor vehicles shall be licensed as tow trucks upon application and submission of an affidavit to the Department of Public Safety and Corrections stating that the company does not store or hold motor vehicles and does not carry garage keeper's legal liability or garage liability insurance. These companies shall receive a "car carrier" endorsement on their required motor vehicle registration. This does not exclude the car carrier company from any other regulations as set by the Louisiana Towing and Storage Act.

2. An application for a Louisiana tow truck license plate shall be made in the form of an affidavit containing the vehicle description and at least the following:

a. the name or names of owners or persons holding interest;

b. the trade or business name of the tow truck operator;

c. legal business entities such as corporations, limited liability companies, partnerships, limited liability partnerships, or other such legally recognized entities, whether registered with the office of the Secretary of State or not, should use their legally registered trade name as their business name. Such legally acknowledged entities shall include in the application:

i. the names of corporate officers;

ii. the name and address of the corporation's registered agent for service of process; and

iii. the names of shareholders;

d. a statement made, sworn and subscribed under oath. An example:

> "Under penalty of perjury, I hereby swear and affirm the information submitted in this application is true and correct to the best of my knowledge and I, as the individual with authority to execute on behalf of the company for which this application is made, hereby agree to abide by the laws and regulations governing towing and storage operations and the tow truck license plate for which this application is made;"

e. application date;

f. notarized signature of the applicant or appropriate corporate officer; and

g. proof of all required insurances overages, amounts, VINs and effective dates.

3. Trade Name; Tow Truck Markings

a. A tow truck owner or operator, prior to application for a tow truck license plate, shall use a trade name approved by the department, except in cases where a tow company is registered with the Secretary of the State.

b. Tow truck owners and tow truck operators shall list, by trade name as defined in this Section of this Chapter, the telephone number and address to their respective business. This listing will be in the official publication of the telephone company that services the area. Any towing service whose business is listed in directory services shall fulfill the intent of this Section.

c. Tow truck operators or owners shall permanently affix and prominently display on both sides of tow trucks the legal trade name of their business, telephone number and city of the vehicle's domicile in lettering at least 2 1/2 inches in height and not less than 1/4 inch in width. Truck and trailer combinations used to transport vehicles may choose to mark either the truck or trailer.

d. The same legal trade name of the business used to mark the tow trucks shall be listed on the tow truck affidavit, registration, insurance certificates, towing and storage invoice and storage inspection license.

B. Issuance, Responsibilities of License Holder

1. Issuance

a. A tow truck license plate will be issued upon affirmation by an applicant that:

i. the application is made and filed in good faith;

ii. the information submitted is complete and accurate;

iii. the applicant's towing equipment meets the requirements set forth in the Towing and Storage Act and these rules.

b. A tow truck owner or operator shall not conduct towing or storage related business until issuance of all required licenses.

c. The holder of a tow truck license plate shall adhere to the requirements of the Towing and Storage Act, rules contained in this Chapter and the laws of this state.

2. Responsibilities

a. Tow truck owners or tow truck operators shall ensure tow trucks owned or controlled by them:

i. display a valid Louisiana Motor Vehicle Inspection Certificate;

ii. display a valid Louisiana towing and recovery license plate or a Louisiana apportioned license plate with proof of the towing and recovery endorsement;

iii. possess either a copy or the original valid registration receipt in the tow truck; and

iv. possess proof of all required insurance coverages and amounts at all times in the tow truck.

b. The holder of a tow truck license plate must notify the department in writing and within 10 days of any change in the original tow truck license plate application.

c. Tow truck license plate(s) are nontransferable, and can be issued to an individual, sole-proprietorship, corporation, or other legally recognized entities.

d. The holder of a tow truck license plate shall immediately surrender the tow plate to the department when there is a change of ownership.

e. A tow truck license plate shall remain affixed and prominently displayed on the tow truck for which it is assigned.

3. Denial of Applications

a. An application for a tow truck license plate shall be denied if:

i. a tow truck owner or operator is disqualified under the Act;

ii. a tow truck has a GVWR or GCVWR of 10,000 pounds or less and it shall not be used for towing vehicles for compensation; unless the year of manufacture is prior to 2007, in which case, a GVWR of 10,000 pounds shall not be cause for denial; or

iii. an application contains false or inaccurate information.

4. Renewal of Tow Truck License Plates

a. Tow truck license plate(s) shall be renewed annually in accordance with the schedule set forth by the Office of Motor Vehicles.

b. Tow truck license plates expire each year on the thirtieth day of June:

i. an administrative penalty shall be assessed for an expired tow truck license plate.

C. Suspension of the Tow Truck License Plate

1. A tow truck license plate may be suspended for failure to:

a. comply with lawful orders of the department, its officers or any court of this state;

b. pay fees or fines owed the Department of Public Safety; or

c. a violation of law, rule or regulation as provided in this Chapter.

d. the applicant or employee that operates a tow truck is found to have been convicted of a felony relating to auto theft, vehicle insurance fraud, burglary of a vehicle and/or possession of a stolen vehicle(s) or stolen vehicle parts or employs someone convicted of one of the above stated offenses.

D. Revocation of a Tow Truck License

1. A tow truck license plate may be revoked for:

a. violation of "Prohibited Business Practices" as found in §1911.C of this Chapter;

b. operation of a tow truck while under the influence of abused or controlled dangerous substance or alcohol;

c. operation of a tow truck during the commission of a crime;

d. obtaining a tow truck license plate under false pretenses; or the applicant or employee that operates a tow truck is found to have been convicted of a felony relating to auto theft, vehicle insurance fraud, burglary of a vehicle and/or possession of stolen vehicle(s) or stolen vehicle parts or employs someone convicted of one of the above stated offenses;

e. removal of a vehicle from private property in violation of R.S. 32:1736;

f. monitoring police radio traffic for profiteering purposes;

g. habitual violation of law, rule, or regulation; or

h. disqualification under R.S. 32:1711 et seq.

AUTHORITY NOTE: Promulgated in accordance with R.S. 32:1714.

HISTORICAL NOTE: Promulgated by the Department of Public Safety and Corrections, Office of the State Police, LR 32:856 (May 2006), amended LR 36:1270 (June 2010), LR 36:2579 (November 2010), LR 40:798 (April 2014).

§1915. Insurance Requirements; Financial Responsibility

A. Required Insurance

1. A tow truck owner or operator shall maintain insurance coverage as prescribed by law. Insurance policies shall be in the name of the tow truck owner or operator, with proper limits of liability and shall remain in effect at all times. The types of required insurance coverage are outlined below:

a. worker's compensation and employer's liability insurance, if applicable;

b. automobile liability coverage in an amount of not less than $300,000 combined single limits coverage;

c. garage keeper's legal liability insurance in an amount not less than $50,000;

d. garage liability insurance in an amount of not less than $50,000;

e. on-hook coverage in an amount of not less than $25,000.

2. Proof of financial responsibility satisfactory to the Office of Motor Vehicles or certificates of insurance issued by an insurer licensed to do business in the state of Louisiana or a federally authorized insurance group licensed in their state of domicile and attesting to carriage with coverage in the amounts herein below listed shall be submitted with the application (R.S. 32:1717 B).

B. Insurance Certificates

1. Insurance certificates shall contain:

a. all information required by law;

b. all information required by the Commissioner of Insurance of the State of Louisiana;

c. effective and expiration dates, types and amounts of coverage;

d. the Vehicle Identification Numbers (VIN) of vehicles insured;

e. the mailing address and physical address of the tow truck owner or operator.

2. Insurance policies shall not be canceled or materially altered except after providing the department 20 days written notice of such cancellation or alteration.

C. Proof of Required Insurances

1. Insurance certificates containing all required information shall be kept at all times in each tow truck and at the place of business of the towing and storage entity available for inspection by officers of the department.

2. The tow truck, towing facility or storage facility owner or operator shall submit proof of insurance to the department immediately upon demand.

3. Certificates of required insurances as provided by this Chapter shall verify in writing limits of liability coverage.

AUTHORITY NOTE: Promulgated in accordance with R.S. 32:1714.

HISTORICAL NOTE: Promulgated by the Department of Public Safety and Corrections, Office of the State Police, LR 32:857 (May 2006).

Subchapter C. Safety

§1917. Driver's License; Required Skills and Knowledge

A. Tow truck operators or towing services shall not operate, or permit the operation of, a tow truck unless the following requirements are satisfied:

1. the operator of a tow truck shall possess a valid Louisiana driver's license;

2. the driver's license shall be a minimum of a Class D, "chauffeurs license," and shall be of an appropriate class as required by law;

3. the operator of a tow truck shall possess proficiency in recovery and transport of vehicles;

4. an operator of a tow truck shall be at least 18 years of age;

5. the operator of a tow truck shall wear a uniform shirt displaying the towing company's and driver's name;

6. the operator of a tow truck has not been convicted of a felony relating to vehicle thefts and is not registered or required to be registered as a sex offender or child predator as required in R.S. 15:542;

7. the operator of a tow truck shall have a safety belt properly fastened about his or her body at all times when the tow truck is in forward motion. This shall not apply when the operator of a tow truck in the process of maneuvering the tow truck while recovering or loading a vehicle;

8. the operator of a tow truck shall wear reflective uniform or clothing equivalent to the ANSI Class II or III standard as federally required when working on or near the roadway during a vehicle recovery.

AUTHORITY NOTE: Promulgated in accordance with R.S. 32:1714.

HISTORICAL NOTE: Promulgated by the Department of Public Safety and Corrections, Office of the State Police, LR 32:858 (May 2006), amended LR 40:799 (April 2014).

§1919. Tow Truck Lighting; Equipment

A. Tow truck operators and towing services shall ensure tow trucks are equipped with, and use, required lighting, pursuant to state law and CFR Title 49. Auxiliary tow lighting shall be required and used if the rear tail lamps, stop lamps or turn signals on a combination of vehicles are obscured, inoperative, or not visible to the rear by approaching traffic. When auxiliary tow lights are required, they shall include a minimum of two properly functioning tail lamps, stop lamps and turn signals, which may be combined and shall be attached as far apart as practical on the rearmost portion of the towed vehicle and visible to the rear by approaching traffic.

B. Tow trucks shall comply with all equipment requirements found in, or adopted pursuant to Louisiana Revised Statutes Title 32, Chapter 1, Part V (Equipment of Vehicles), 32:1711 et seq., and, if applicable, CFR Title 49.

C. Tow truck shall be equipped with only amber colored flashing warning lights, strobes, light bars or beacons with sufficient strength and mounted in a location to be visible at 360 degrees at a distance of no less than 1,000 feet under normal atmospheric conditions. Each tow truck shall be equipped with at least one amber colored light bar or beacon mounted to the roof or a higher location on a tow truck. Tow trucks used solely to transport vehicles on an attached trailer are exempt from this requirement provided they do not conduct roadside recovery operations or participate on any law enforcement rotation list.

D. Tow truck operators and towing services shall ensure warning lights are operable at all times and shall only be activated after arriving at a disabled vehicle or when towing

or recovering a vehicle. Slide back tow trucks solely transporting vehicles on their beds may opt to activate their tow truck's warning lights.

AUTHORITY NOTE: Promulgated in accordance with R.S. 32:1714.

HISTORICAL NOTE: Promulgated by the Department of Public Safety and Corrections, Office of the State Police, LR 32:858 (May 2006), amended LR 40:799 (April 2014).

§1921. Required Equipment

A. Tow trucks shall be equipped with the following properly functioning equipment at all times.

1. Oil-Absorbing Materials

a. Each tow truck shall be equipped with a minimum of 5 gallons of sand, dirt, or manufactured materials capable of absorbing sufficient quantities of fluids. Materials shall be carried in such a manner as to be free from exposure to the elements.

2. Broom

a. Each tow truck shall be equipped with a standard or push broom of a sufficient size to effectively clear debris.

3. Shovel

a. Each tow truck shall be equipped with a standard shovel of a sufficient size to effectively clear debris.

4. Flashlight or Electric Lantern

a. Each tow truck shall be equipped with an electric lantern or flashlight that provides sufficient lighting to facilitate recovery or towing work.

5. Fire Extinguishers

a. Tow trucks shall be equipped with a mounted fire extinguisher having no less than an Underwriters Laboratory rating of 10 B:C.

6. Emergency Warning Devices

a. Tow trucks shall be equipped with at least three, non-flammable emergency warning devices capable of warning motorists of a hazard in or near a roadway.

7. Steering Wheel Clamps

a. Steering wheel clamps, cable, ropes or their equivalents shall be of sufficient strength to adequately secure and lock the steering mechanism of a towed vehicle in a straight and forward position.

8. Tow Sling or Tow Plate

a. Tow trucks shall be equipped with a tow sling, plate, bar or equivalent that is structurally adequate to sustain the weight drawn. Slings or plates shall be properly and securely mounted to the tow truck without excessive "play" or slack.

b. The tow plates, slings and tow-bars shall be securely affixed to the towed vehicle by means of chains, hooks, straps or their equivalent. These devices shall be of a towing capacity equal to the weight of the towed vehicle requiring use of at least two chains, hooks, straps, etc.

9. Tow truck components including, but not limited to, winches, booms, cables, synthetic rope, cable clamps, thimbles, sheaves, guides, controls, blocks, slings, chains, hooks, bed locks, hydraulic components, etc., shall be in good working order and maintained to manufacturer/factory specifications.

B. Securement and Safety Devices; Detached or Shifting Loads

1. Securement and Safety Devices

a. Every vehicle towed by a tow truck shall be joined by at least two safety devices, chains or cables, spaced as far apart as practical to the forward portion of the towed vehicle, with a combined tensile strength equal to or greater than the gross weight of the towed vehicle times 1.3. Safety devices shall be attached in such a way as to prevent vehicle separation upon failure of the towing attachment and shall be anchored to both the tow truck and vehicle being towed with only enough slack to permit free turning of the vehicles.

b. In addition to Subparagraph a above, all towed vehicle placed in a wheel lift device shall be secured to the wheel lift on both sides by straps or chains of an adequate strength and design to safely couple the vehicle to the wheel lift.

c. Acceptable securement devices are chains, cables or synthetic webbing with a combined working load limit equal to or greater than one-half the gross weight of the transported vehicle and customarily used for securing a vehicle or load. Acceptable securement devices shall meet all requirements in CFR 49.

2. Slide-Back Tow Trucks; Trailers

a. A slide-back tow truck or trailer carrying a vehicle on its bed shall secure the vehicle with an acceptable securement device to the frame or other anchor points on the bed with at least one device (tiedown) securing the front and one device securing the rear of the transported vehicle in addition to the winch cable.

b. Transported vehicles over 10,000 pounds shall use a minimum of four acceptable securement devices (tiedowns); two at each end of the transported vehicle.

c. The securement devices shall not contain slack and shall prevent any movement of the transported vehicle and be of structural strength adequate to safely secure the vehicle.

AUTHORITY NOTE: Promulgated in accordance with R.S. 32:1714.

HISTORICAL NOTE: Promulgated by the Department of Public Safety and Corrections, Office of the State Police, LR 32:858 (May 2006), amended LR 40:799 (April 2014).

§1923. Capacities and Specifications of Tow Equipment

A. Tow trucks shall not be licensed for a weight less than the manufacturer's GVWR.

B. Tow trucks shall be properly licensed to carry the weight of the tow truck and its load or laden weight.

C. A tow truck owner or tow truck operator found exceeding the weight for which the tow truck is licensed shall be assessed an administrative penalty.

D. A tow trucks shall have its factory VIN and GVWR posted on the tow truck in an accessible location.

E. Tow trucks licensed pursuant to this Chapter shall be equipped with only those winches, booms and cranes that have been produced and constructed by a manufacturer who carries product liability and which regularly produces winches and cranes of guaranteed quality.

1. A winch, boom or crane will not be prohibited by this subsection if the tow truck owner submits to the department a certification from a reputable testing laboratory, regularly engaged in the testing of such equipment, indicating that the capacity of the winch, boom or crane as mounted in the tow truck is not less than the weight for which the application has been made and the certification is carried in the truck at all times.

2. All costs of such testing and certification shall be borne by the tow truck owner or operator.

AUTHORITY NOTE: Promulgated in accordance with R.S. 32:1714.

HISTORICAL NOTE: Promulgated by the Department of Public Safety and Corrections, Office of the State Police, LR 32:859 (May 2006).

§1925. Tow Truck Load Limitations; Specifications

A. Load Limitations

1. No tow truck operator shall tow or transport another vehicle unless the tow truck is capable of safely towing the vehicle.

2. A tow truck and its load shall not exceed the capabilities of the towing vehicle or hinder its ability to safely accelerate, stop, or maneuver.

B. Specifications

1. At no time shall a slide back tow truck or car carrier, transporting a vehicle on its bed, exceed its manufacturer's GVWR or the manufacturer's rated capacity for the towing assembly.

2. At no time shall any tow truck exceed the manufacturer's rated capacity for the towing assembly.

AUTHORITY NOTE: Promulgated in accordance with R.S. 32:1714.

HISTORICAL NOTE: Promulgated by the Department of Public Safety and Corrections, Office of the State Police, LR 32:859 (May 2006).

§1927. Inspections by the Department

A. Investigations

1. The department is responsible for the effective regulation of vehicle towing, recovery and storage businesses in Louisiana. Applicants seeking or issued a tow truck license plate or a storage inspection license shall be subject to background investigations to determine eligibility.

2. The department may require a licensee to submit records, invoices, documents, etc., as necessary to complete an investigation.

3. Tow truck and storage facility owners or operators have a continuing obligation to inform the department in writing of any legal action taken against them that may affect eligibility to possess a tow truck license plate or a storage inspection license.

B. Inspection of Records, Invoices, Documents

1. Place of Business; Tow Trucks; Storage Facilities

a. Anytime during regular or normal business hours or when staffed; a business location, vehicle storage yard or facility and the premises of a tow truck owner or tow truck operator shall be subject to inspection by the department, with or without advance notice, to promote compliance with the provisions of this Chapter.

b. Tow truck operators, towing services, storage facilities, their employees or agents shall render full cooperation and courtesy to department officers.

c. Department officers are authorized to enter upon any property and perform inspections of towing facilities, storage facilities or tow trucks licensed or subject to licensing pursuant to this Chapter.

d. Tow trucks may be stopped and inspected at anytime while being operated on a public roadway to promote compliance with the provisions of this Chapter. Tow trucks transporting a vehicle where the owner or operator of that vehicle is present or when the driver provides a previous inspection report conducted within the last 24 hours shall not be delayed for an inspection unless there is an obvious safety violation. Inspecting officers shall consider the safety of passing motorists, the operator of the tow truck, and themselves when selecting an inspection location.

2. Records

a. Upon request, a licensee shall make available to the department all required information and records and provide copies, as deemed appropriate by the department.

3. Other Law Enforcement Agencies

a. Law enforcement officers, within their jurisdiction, may inspect towing or storage businesses' records as part of an investigation during normal business hours.

4. Tow Truck Repair and Maintenance

a. Every tow operator or towing service shall systematically inspect, repair and maintain or cause to systematically inspect, repair and maintain all tow trucks and tow equipment subject to their control.

b. A tow truck owner or operator shall not operate, or allow or permit the operation of a tow truck in such a

condition as to likely cause a motor vehicle crash, vehicle breakdown or malfunction.

5. Tow Trucks Declared Unsafe for Operation

a. Out-of-Service Criteria

i. Department officers shall declare and mark "out-of-service" any tow truck which, by reason of its mechanical condition or loading, would likely cause a motor vehicle crash or a breakdown.

ii. Department officers may place any tow truck out-of-service when such tow truck is found to be in need of repair to safely operate or an out-of-service violation exists as enumerated in the Commercial Vehicle Safety Alliance, Out-of-Service Criteria, revised January 1, 2004, or as amended hereafter.

iii. Department officers may place any tow truck driver out-of-service when such tow truck driver is found to be unqualified or unfit to drive or an out-of-service violation exists as enumerated in the Commercial Vehicle Safety Alliance, Out-of-Service Criteria, revised January 1, 2004, or as amended hereafter.

iv. A tow truck driver or tow truck that has been placed out-of-service shall remain as such until the required repairs are made and the condition is corrected and no longer exists.

6. Driving after Being Declared Out-of-Service

a. Drivers

i. No tow truck operator who has been declared out of service shall operate a tow truck or commercial vehicle until the driver may lawfully do so.

b. Tow Trucks

i. No tow truck owner or tow truck operator shall require or permit any person to operate nor shall any person operate any tow truck declared out-of-service until all repairs required by the out-of-service notice have been satisfactorily completed.

c. Penalty

i. Any tow truck owner or tow truck operator violating the provisions of Subparagraph B.6.a (drivers) of this Section shall be fined no less than $250 and no more than $500

ii. Any tow truck owner violating the provisions of Subparagraph B.6.b (tow trucks) of this Section shall be fined $500.

AUTHORITY NOTE: Promulgated in accordance with R.S. 32:1714.

HISTORICAL NOTE: Promulgated by the Department of Public Safety and Corrections, Office of the State Police, LR 32:859 (May 2006), amended LR 40:799 (April 2014).

§1929. Towing Services to Use Due Care

A. The towing service shall determine the method and manner of removing vehicles, and shall exercise due care to limit collateral damage during the towing, recovery or removal operations.

B. Tow truck and/or storage facility owners and operators shall adhere to any lawful orders or direction of a department law enforcement officer. No tow truck owner, operator, or employee shall be required to follow a directive or order that is unsafe or beyond the operational standard or capacity of any equipment being used in cleanup or in the removing the roadway hazard. If a tow truck owner or operator refuses to follow a directive or order because of an unsafe condition, no adverse action by a law enforcement agency shall be taken against such owner or operator including removal from any rotation list.

AUTHORITY NOTE: Promulgated in accordance with R.S. 32:1714.

HISTORICAL NOTE: Promulgated by the Department of Public Safety and Corrections, Office of the State Police, LR 32:860 (May 2006), amended LR 40:799 (April 2014).

§1930. Vehicles Towed from Private Property

A. Tow truck company owners, operators, and employees shall comply with the provisions of R.S. 32:1736 when towing vehicles from private property.

B. Towing and storage companies that conduct nonconsensual tows shall possess authority through the Louisiana Public Service Commission and a valid storage inspection license.

AUTHORITY NOTE: Promulgated in accordance with R.S. 32:1714.

HISTORICAL NOTE: Promulgated by the Department of Public Safety and Corrections, Office of the State Police, LR 36:2579 (November 2010).

Subchapter D. Vehicle Storage

§1931. Storage Facility; Licensing, Fees, Inspection, Requirements

A. Storage Facilities

1. Storage facilities, subject to the provisions of R.S. 32:1711 et seq., shall be located within Louisiana and make application to the department for a storage inspection license for each storage facility location.

2. A valid storage inspection license must be issued by the department before conducting business as a storage facility or a new storage facility location being utilized.

3. A storage company with a change in name, address or ownership shall reapply and pay fees in accordance with this Section.

4. Storage inspection licenses shall expire annually on the thirtieth day of June and may be renewed 60 days prior to expiration. A company operating as a storage facility shall renew their storage inspection license prior to expiration.

B. Storage Facilities; General Requirements

1. Storage companies failing to comply with the requirements set forth in this Chapter shall be subject to administrative penalties.

2. Storage companies shall apply for and be issued a storage inspection license prior to charging or collecting storage or administrative fees. Any company found in violation of this Subchapter shall be subject to administrative and/or criminal penalties and shall forfeit all storage and administrative fees.

3. All licensees and applicants shall be current in the payment of all penalties and fees owed to the Department of Public Safety. Companies failing to comply with this requirement are subject to having their storage inspection license suspended or revoked by the Office of State Police and the business shall not charge or collect storage or administrative fees.

4. Prior to obtaining a storage inspection license, all applicable parish and/or municipal occupational licenses required for a facility to operate within said parish or municipality shall be current and valid.

5. Towing companies and existing qualified businesses applying for a storage inspection license shall apply in the same legal name of their business.

6.a. Storage companies shall comply with the insurance requirements listed in this Chapter, namely:

i. garage keepers legal liability insurance in an amount not less than $50,000;

ii. garage liability insurance in an amount of not less than $50,000; and

iii. other applicable insurance requirements set forth in this Chapter.

b. A storage operator shall maintain the policies of insurance and adhere to the requirements set forth in §1915 of this Chapter, except automobile liability coverage and on-hook coverage shall not be required unless a company operates tow trucks.

7. Prior to a towing or storage company going out of business, the company, company owners or agents shall return all stored vehicles to the respective vehicle owners or legally dispose of all stored vehicles by obtaining permits to sell or using other vehicle disposal methods enumerated in the Towing and Storage Act.

8. Storage facilities must have their place of business and storage area located on the same piece of property. The property may not be subdivided by any public street, right of way, or other piece of property not owned or leased by the storage facility. This provision will apply to all new storage facility applicants effective July 1, 2010 and will not affect licensed facilities seeking a renewal.

9. The place of business shall meet all requirements as defined in §1905 of this Chapter. This provision shall only apply to new storage facility applicants effective January 1, 2013 and will not affect licensed facilities seeking a renewal.

C. Fees

1. An applicant for a storage inspection license shall:

a. remit the sum of $100 per storage license, payable to the Louisiana State Police, Towing and Recovery Unit;

b. mail completed applications to the Louisiana State Police, Towing and Recovery Unit, P.O. Box, 66614, Mail Slip A-26, Baton Rouge, LA 70896.

D. Inspection of a Storage Facility

1. Storage facilities shall make business records available for inspection by department officers during normal business hours, unless exigent circumstances exist which may require access to records after hours and shall provide copies upon request. Business records shall include any records created or obtained while acting as a towing and/or storage facility.

2. Storage inspection licenses shall be clearly visible and prominently displayed at each storage location's office.

AUTHORITY NOTE: Promulgated in accordance with R.S. 32:1714.

HISTORICAL NOTE: Promulgated by the Department of Public Safety and Corrections, Office of the State Police, LR 32:861 (May 2006), amended LR 36:2579 (November 2010), LR 40:800 (April 2014).

§1933. Requirements for Official Report of Stored Vehicle (ORSV); Filing; Submittal; Option of the Department to Send and Receive ORSV Information

A. Storage Facility Requirements

1. When any vehicle subject to registration in this state has been stored, parked, or left at a garage where fees are charged for storage or parking, the owner of the storage or parking facility shall, unless exempted in R.S. 32:1721 or 32:1722, comply with R.S. 32:1719 and do the following.

a. File an Official Report of Stored Vehicle (ORSV) within three business days of receiving the vehicle in writing addressed to the Department of Public Safety and Corrections, Office of Motor Vehicles, Specialized Vehicle Unit, P.O. Box 64886, Baton Rouge, LA 70896, or the department's authorized agent. If the vehicle is released to the vehicle owner within three business days of towing or receiving the vehicle, a storage/towing company shall not be required to submit the ORSV notification and if the ORSV notification is not made prior to the release of the vehicle, there shall be no charge for related administrative fees.

b. Ensure that the ORSV contains make, model, VIN, license plate number, state of issuance and expiration date, vehicle storage date, adjusted storage date, stored vehicle's actual location, storage company's actual mailing address and state police storage inspection license number.

2. The department may charge an administrative fee of $9.50 to process the information exchange required in the ORSV notification; which fees shall be deposited in accordance with R.S. 32:1731.

3. The department or the department's authorized agent, shall provide directly and in writing to the owner of

the storage or parking facility, the most current owner information available on the stored vehicle and indicate if the vehicle is reported stolen. If the department reports that a stored vehicle is or has been registered in another state, that report shall indicate that the department has used due diligence in obtaining information from nationwide databases available to the department.

4. If a storage company has not complied with the storage inspection licensing requirements provided in this Chapter; the department, its authorized agent, or the office of motor vehicles shall:

a. provide the owner information requested on the ORSV to the storage/towing company; and

b. forward a copy of the ORSV to the Office of State Police, Towing and Recovery Unit, within three business days of receipt of the ORSV.

B. Procedures for Transmission and Receipt of ORSV Information

1. The department may, as it deems appropriate, establish procedures for the collection of stored vehicle information as listed in this Subsection, including, but not limited to:

a. requirements that ORSV information be forwarded through electronic means from licensed storage companies the department;

b. requirements that ORSV registrant information and vehicle owner information be forwarded to licensed storage facilities using electronic notifications.

AUTHORITY NOTE: Promulgated in accordance with R.S. 32:1714.

HISTORICAL NOTE: Promulgated by the Department of Public Safety and Corrections, Office of the State Police, LR 32:861 (May 2006), amended LR 36:2579 (November 2010).

§1935. Owner Notification of a Stored Vehicle

A. Owners, employees and agents of storage facilities or business subject to licensing as storage facilities shall comply with the notification requirements found in R.S. 32:1720, 32:1720.1 and 32:1722.

AUTHORITY NOTE: Promulgated in accordance with R.S. 32:1714.

HISTORICAL NOTE: Promulgated by the Department of Public Safety and Corrections, Office of the State Police, LR 32:861 (May 2006).

§1937. Administrative Fees

A. Administrative fees for storage of vehicles shall not be charged or otherwise collected without possession of a valid storage inspection license, and the timely filing of an ORSV prior to the release of the vehicle or other notification requirements in the Towing and Storage Act.

B. Licensed storage companies may charge the vehicle owner/lien holder those administrative costs incurred by filing an ORSV along with any postal charges related to the mailing of the ORSV notices and certificate of mailing letters sent to the vehicle owner and any lien holder.

C. The maximum administrative fee that may be charged by a storage company for filing of the Official Report of Stored Vehicle notice shall be $25 for in-state notifications and $30 for out-of-state notifications. The maximum administrative fee that may be charged for mailing certificate of mailing letters to the vehicle owner and lien holder shall be no more than the rate for US Postal Service plus $4 per required letter.

D. All costs must be documented with receipts, which shall be made available to the department, vehicle owner and lien holder upon demand. Companies found in violation of this part shall be subject to criminal or administrative penalties prescribed in this Chapter, including forfeiture of storage and administrative fees.

AUTHORITY NOTE: Promulgated in accordance with R.S. 32:1714.

HISTORICAL NOTE: Promulgated by the Department of Public Safety and Corrections, Office of the State Police, LR 32:861 (May 2006), amended LR 36:2580 (November 2010).

§1939. Permits to Sell and Permits to Dismantle

A. Any business that stores vehicles pursuant to this Chapter, prior to filing for a permit to sell or for a permit to dismantle, shall have obtained a current Louisiana Storage Inspection License.

B. Any business that stores vehicles pursuant to this Chapter shall include with each permit to sell or permit to dismantle filing, a legible photocopy of their storage inspection license.

1. Applications for permits to dismantle or permits to sell without photocopies of the storage inspection license shall be rejected.

2. Any business that stores vehicles pursuant to this Chapter and provides the department a fictitious or fraudulent storage inspection license photocopy, or uses, or allows the use of, a storage inspection license of another business shall be subject to criminal and administrative penalties prescribed by law, including the revocation of the storage inspection license.

3. Licensed storage facilities shall not place a vehicle into storage for the purposes of circumventing acceptable titling practices and the payment of statutorily required taxes and fees.

C. The department, or its authorized agents, shall not issue permits to sell or permits to dismantle, to a person or business failing to comply with the notification and storage inspection licensing requirements.

D. Storage facilities shall make notifications required in R.S. 32:1719 and 32:1720, unless R.S. 32:1722 is applicable, and shall comply with the requirements found in R.S. 32:1711 et seq.

E. Storage facilities shall maintain copies of the permits to sell, permits to dismantle, and bills of sale with buyer's name as may be applicable for each vehicle stored.

AUTHORITY NOTE: Promulgated in accordance with R.S. 32:1714.

HISTORICAL NOTE: Promulgated by the Department of Public Safety and Corrections, Office of the State Police, LR 32:862 (May 2006), amended LR 36:2580 (November 2010), LR 40:800 (April 2014).

§1941. Storage and Towing Facilities; General Requirements; Procedures

A. A facility may only store and charge storage on vehicles that are in the facility's actual possession, located within the licensed storage area and meets the requirements of this Chapter.

B. Vehicles shall be released immediately to the vehicle owner or lien holder, or authorized representative once payment is made, any applicable lien holder requirements (R.S. 32:1720.1) are met, and any applicable documented law enforcement or department hold orders are released.

1. Authorized representative shall mean anyone who has obtained written authorization from the vehicle owner or lien holder. Written authorization shall contain the name of the authorized agent, the name and signature of the vehicle owner or lien holder, a phone number for the vehicle owner or lien holder, and a description of the vehicle including the year, make, model, and color. Written authorization does not need to be notarized if signature of the owner or lien holder is witnessed and contains a photocopy of the owner's government issued photo identification. Written authorization shall be maintained with the vehicle file at the towing and/or storage facility' place of business. The requirement of written authorization shall not apply to an insurance company or its representative as provided in R.S. 22:1292(C)(2).

C. Storage and towing facilities shall provide for the security and safety of vehicles stored in accordance with this Chapter. Storage areas shall have security barriers or safety apparatus suitable to insure the security of the property contained therein. Outside storage areas shall be enclosed by at least a 6 foot high chain link fence, or fence of similar strength or solid wall sufficient to protect against loss, trespass or vandalism. The loss, damage, theft or misappropriation of a stored vehicle or its contents shall be evidence of a violation of this provision, if the loss, damage, theft or misappropriation was supported by sufficient evidence.

D. Storage and towing facilities shall have a clearly visible sign maintained at all times at the business office and at the entrance to any outside storage area, stating the name of the business, telephone number and hours of operation. An after-hour telephone number shall be included on the sign advising the public how to make contact for the release of vehicles, contents or personal property prior to any company charging a gate fee.

E. Removable personal items shall not be withheld by the towing or storage facility. Any person with picture identification, who shows proof of ownership, or written authorization from the stored vehicle's registered or legal owner, may inspect, photograph, view the vehicle and remove non-affixed personal property, including the license plate, without charge during normal business hours. These items will be released to the owner or person authorized by the vehicle owner upon request if there is no police hold on them.

F. Storage areas shall be adequate in size and construction for storing vehicles.

G. Whenever any vehicle has been towed to a storage facility, other than by owner's request, the owner or operator of the storage facility shall comply with the law enforcement notification requirements found in R.S. 32:1718.

H. The shared use of a storage facility, towing facility, business office or tow trucks by two or more different towing or storage companies is expressly prohibited.

I. Towing and storage operators will maintain all records dealing with the towing and storage of vehicles for a minimum of three years.

J. Towing or storage companies shall not store vehicles or charge for a service performed by another business or individual, unless the vehicle's owner authorizes the service or the vehicle's transfer to another business in writing.

K. All third party tows or storage shall be prohibited, unless authorized by a law enforcement agency or in writing by the towed or stored vehicle's owner prior to the move.

L. Vehicles shall be handled and returned in substantially the same condition as they existed before being towed or stored.

M. Personal property left in a vehicle and not claimed prior to a company obtaining a permit to sell on said vehicle, shall be disposed of in accordance with existing applicable civil law.

N. The address that the towing or storage service lists on its applications shall be the business location where its business records are kept.

O. Vehicle repairs shall be authorized specifically by signature of vehicle owner or operator.

P. Towing and Storage Invoices, Bills, Repair Statements and Vehicle Repair Authorization Forms

1. All invoices, bills, statements and vehicle repair authorization forms shall be legible and include:

a. the legal name of the business and the physical and mailing address;

b. the vehicle description, VIN, license plate number, state of issue, vehicle year, vehicle make, and vehicle model and;

c. contain itemized charges for service as they occur.

2. All towing and storage invoices, bills, statements and vehicle repair authorization forms shall be:

a. provided to a vehicle owner at the time of recompense;

b. consecutively numbered and filed by number;

c. completed to indicate the date the vehicle was released, the person's name, driver's license number and signature of the person taking possession of the vehicle; and

d. readily available, containing all the required information, along with voided invoices, upon request by virtue of either being kept on the actual premises or electronically produced via fax or other similar technological medium with 10 minutes.

3. Towing invoices shall include the following legible information and shall be maintained with the towed vehicle at all times:

a. the requirements enumerated in Paragraph 1 above;

b. date, time and location of tow or service;

c. the tow-truck operator's name and time of dispatch; and

d. name and driver's license number of vehicle owner, operator, or other person with authority to authorize the tow, or the name of the law enforcement agency requesting and authorizing the tow.

e. a copy of a towing and storage report issued by a law enforcement or other public agency shall exempt the towing company from the invoice requirements for the initial tow. The towing invoice shall be completed once the vehicle arrives at the storage facility or other destination as directed by the law enforcement agency or the owner or operator of the vehicle.

Q. Storage facilities shall maintain storage records at the individual locations, which shall include at least the following information:

1. date and time call for service was received and location of vehicle if towed;

2. name of the person and company requesting and authorizing the tow or service;

3. description of the vehicle including VIN, license number and state, year, make, model and color;

4. the tow truck operator's name, if towed;

5. the date and location vehicle was placed in storage;

6. proof of filing ORSV or exceptions listed in the Towing and Storage Act;

7. letters of notification as required by these rules and law;

8. proof of all administrative costs; and

9. records of release of vehicles shall include the date and legal name, driver's license number of the person the stored/towed vehicle was released to.

10. records from the sale of a vehicle including the bill of sale with sale price, copies of the permit to sell, name of the buyer; and

11. proof of law enforcement notification as required in R.S. 32:1718.

AUTHORITY NOTE: Promulgated in accordance with R.S. 32:1714.

HISTORICAL NOTE: Promulgated by the Department of Public Safety and Corrections, Office of the State Police, LR 32:862 (May 2006), amended LR 36:2580 (November 2010), LR 40:800 (April 2014).

§1943. Storage Rates

A. Vehicle storage fees shall be based on a calendar day and documented by ORSV notification or the requirements in R.S. 32:1722.

B. Towing and/or storage facilities shall be staffed and open for business Monday thru Friday, 8 a.m. to 5 p.m., excluding state holidays. Employees staffing the facility must have access to vehicle storage records to assist in administrative inspections by the department and be able to release vehicles and/or belongings. All storage records since the date of the last annual storage inspection must be readily accessible and available. Storage records prior to the last annual inspection, if not readily available, shall be made available by the end of the next business day.

1. Licensed storage facilities that operate as a mechanic or repair shop and do not conduct non-consensual tows may set their own business hours provided they do not charge gate fees and give notice to the Department by noting their days and hours of operation on their storage license application or renewal form. The storage facility must be open for business at least five days a week. These hours must be clearly posted along with other required information in accordance with §1941.D of this Chapter. Storage Facilities that do not adhere to the hours of operation listed on their storage license application or renewal form shall be in violation of failing to staff their facility. Towing and/or storage facilities shall be staffed and open for business Monday thru Friday, 8 a.m. to 5 p.m., excluding state holidays.

C. The daily storage fee, as set by the Public Service Commission and department approved gate fees and administrative fees shall be the only fees charged for storing a vehicle. There shall be no additional charges for locating or retrieving the vehicle in the storage facility, viewing of the vehicle, photographing the vehicle, removal of items from the vehicle, moving a vehicle, or for any other similar activity during business hours.

AUTHORITY NOTE: Promulgated in accordance with R.S. 32:1714.

HISTORICAL NOTE: Promulgated by the Department of Public Safety and Corrections, Office of the State Police, LR 32:863 (May 2006), amended LR 40:800 (April 2014).

§1945. Gate Fees

A. Business Hours

1. For the purposes of this part, business hours will be Monday thru Friday, 8 a.m. to 5 p.m., excluding state holidays.

2. Gate fees shall not be charged during business hours.

B. Gate Fee Charge

1. A towing or storage company that charges a gate fee shall not charge a fee greater than $45.

2. An owner of a vehicle charged fees in violation of this Chapter shall have cause of action to recover the amount of the excess fees, plus attorney fees and all court costs.

AUTHORITY NOTE: Promulgated in accordance with R.S. 32:1714.

HISTORICAL NOTE: Promulgated by the Department of Public Safety and Corrections, Office of the State Police, LR 32:863 (May 2006).

Subchapter E. Rotation List

§1947. Law Enforcement Tow Truck Rotation List

A. Establishing a Rotation List

1. Louisiana law enforcement agencies may establish a rotation list of Louisiana towing companies using boom and/or slide back tow trucks and facilities licensed in accordance with the provisions of R.S. 32:1711 et seq., and rules and regulations promulgated herein.

2. Towing companies selected by a law enforcement agency to participate on their rotation list shall participate at the discretion of the law enforcement agency and may be removed for any violation of law, agency rule, or policy.

3. When a law enforcement officer determines that a motor vehicle must be towed, the law enforcement officer shall give the owner or operator of the motor vehicle the option to select a properly licensed towing company to tow his vehicle. If the owner or operator of the motor vehicle is unable to select a licensed towing company, chooses not to select a particular licensed towing company, or an emergency situation requires the immediate removal of the vehicle, the next available licensed towing company on the approved law enforcement rotation list shall be called by the law enforcement officer to tow the vehicle.

4. The towing company selected by the owner or operator of a vehicle or law enforcement agency shall be allowed to respond within to the call within 45 minutes. If the towing company fails to arrive within 45 minutes, the law enforcement officer may select the next available towing company from the approved rotation list.

5. Towing and storage facilities storing a vehicle that has a law enforcement hold, and the law enforcement agency requesting the hold, shall comply with R.S. 32:1735.1. Law enforcement agencies requesting to extend the hold beyond the initial 14 days shall submit the request in writing, on the agency's letterhead, to the storage facility. This request shall be kept on file at the facility and must contain the following information:

a. the name and contact information of the officer requesting the hold;

b. the name of the vehicle's owner, if available;

c. the license plate number with state of issue and vehicle identification number;

d. the year, make, and model of the vehicle

6. No law enforcement officer shall recommend to the vehicle owner or operator a specific tow company to conduct a tow. All tows shall be referred to the law enforcement rotation list or the authorized contractor for the law enforcement agency. When the owner or operator exercises their option to select the tow company, such selection shall be duly noted on the tow invoice or the law enforcement record of the incident.

B. The following Paragraphs of this Section outline the minimum requirements for a towing rotation list and are to serve as a template for local law enforcement agencies to use at their discretion.

1. Every person, firm, corporation or other entity who participates in a law enforcement Tow Rotation Program, and is engaged in, or associated with the towing, removal or storage of any wrecked, abandoned, disabled or other designated vehicle, shall comply with the department's procedural orders and all applicable state laws, and administrative regulations governing the towing and storage of vehicles including, but not limited to, R.S. 32:1711 et seq., and LAC 55:I.1901 et seq.

C. Approved towing or storage companies shall:

1. have been in business as such in the zone for which they are applying, for a continuous period of 12 months, prior to filing an application to participate. Transfers or the inheritance of an established tow company may be exempt from this requirement if the new owner has the necessary experience and meets the minimum licensing requirements;

2. maintain a valid storage inspection license and not owe any outstanding fees/fines to the department;

3. provide 24-hour service on a 365 day per year basis;

4. provide for a maximum 45 minute response time from the time of notification, unless extenuating circumstances exist;

5. not be owned, operated by, or knowingly employ any person that operates tow trucks who has been convicted of a felony relating to auto theft, vehicle insurance fraud, burglary of a vehicle, possession of stolen vehicles or vehicle parts.

6. not contract for towing or storage services with any party not in compliance with this Part.

D. Application for Participation in the Tow Rotation Program

1. Application shall be made on the requisite department-approved forms.

2. Upon submission, the application shall be forwarded to the appropriate department representative, who shall review and determine compliance.

3. Authorization shall be withheld from any company not meeting the operational requirements of this order applicable state laws or administrative regulations. Upon a finding of compliance with the aforementioned requirements, the applicant shall be added to the towing rotation list. The original application and affirmation shall be maintained at the department.

4. A contract, approved and provided by the department, must be signed by the towing company annually, once suitability has been verified. Authorization shall continue unless terminated by the department head.

E. Operational Requirements of Tow Trucks

1. Debris from a crash, with the exception of medical waste, shall be removed by the tow truck driver, other towing company employees, or the towing company assignee. The officer should make every effort to ensure that the crash scene is safe and protected throughout the recovery process.

2. Authorized towing companies shall honor all hold orders of the department.

a. The release of a vehicle or contents shall be authorized by the department storing the vehicle.

3. An officer who is responsible for storing a vehicle shall complete a vehicle storage, wrecker request and inventory record form.

a. The towing company shall be furnished a copy of the report by the officer at the scene.

F. Tow Trucks, Operators, Business Facility, and Storage Requirements

1. Each tow truck and operator shall meet all operational requirements mandated for tow trucks in R.S. 23, 32, and 47 as well as LAC 55. All tow trucks in a business's fleet shall also be equipped with the following:

a. a heavy duty shop type broom;

b. at least one shovel;

c. at least one fully charged fire extinguisher that meets or exceeds requirements set forth in FMCSA 393.95;

d. at least two vehicle wheel chocks with anchor chains or hydraulic levelers (not required on car carriers);

e. search lights or adequate working lights;

f. hand held flashlight (charged);

g. a steering wheel tie down;

h. a minimum of 5 gallons of environmentally safe absorbent material;

i. emergency stopped vehicle warning devices;

j. at least one amber rotating or flashing beacon visible at night for 360 degrees at a distance of 1000 feet, under normal atmospheric conditions;

k. a current towing and recovery license plate and Louisiana MVI certificate;

l. have all dunnage and loose items on the bed secured.

2. All tow truck operators shall:

a. be an employee of the tow company whose services are being utilized;

b. possess a valid Louisiana driver's license of the appropriate class for the tow truck being driven;

c. be proficient with and have the necessary experience/training in vehicle recovery and towing;

d. be able to communicate in English;

e. wear a uniform shirt displaying the name of the towing company and driver;

f. wear appropriate footwear (no sandals or open-toe footwear);

g. wear an approved ANSI Class II or III reflective vest that is in good condition and fits the operator when working on or near the roadway during crash or vehicle recovery.

3. The business facility shall be equipped with communications equipment capable of providing direct contact between the department's dispatch and the company representative. The company representative must be able to maintain communications with the tow truck operator responding to a call. Citizen band radios and pagers are not sufficient equipment for this purpose.

4. Unless prior arrangements have been made with the department head, a business facility (or representative) must answer all phone calls for towing services at all times. Failure to answer any telephone call may constitute grounds for an immediate "one call" suspension from the rotation list.

5. The business facility shall be staffed and open Monday through Friday, from 8:00 a.m. to 5:00 p.m., excluding holidays. A representative from the company shall be on call for emergencies and an individual shall not be charged a gate fee or storage fees for being unable to retrieve their vehicle as a result of an action or omission from which the tow company would benefit.

6. The storage facility shall be of sufficient area to accommodate a minimum of 20 vehicles.

7. The storage facility shall be enclosed by a 6-foot fence or other physical barrier, either of which shall be sufficient to deter trespass.

8. The shared use of any facility for the storage of motor vehicles by more than one tow company is expressly prohibited.

G. Prohibition of Tow Trucks

1. No tow truck owner, agent, employee, or operator shall stop at the scene of a crash, disabled, or unattended vehicle for the purpose of soliciting business, either directly

or indirectly; unless the owner or operator of said vehicle has specifically summoned the tow company or its employees or agents to such scene for towing or recovery purposes. Cruising highways for direct or indirect compensation is prohibited.

2. No operator shall, without the express authorization of the responsible investigating agency, move any vehicle from a public highway or street or from any public property when such vehicle is abandoned, stolen or damaged as a result of a crash.

EXCEPTION: Notwithstanding the conditions imposed in these rules, operators may, in emergency cases, move a vehicle involved in a crash, if the movement is necessary to extricate a person from the wreckage or to remove an immediate hazard to life and/or property. In no event shall the movement be more than is reasonable and necessary.

3. Operators shall respond to the scenes of police investigations only when called by the police or by the owner/operator of a disabled vehicle.

a. If tow truck operators are unable to respond when summoned by special request or upon request by the department, they must immediately notify the department and shall not summon a substitute. Repeated instances of tow company failing to respond may subject the tow company to removal from the rotation list.

b. If a tow truck arrives at the scene and is unable to provide the necessary services, the tow company must immediately notify the department. The tow company shall not summon a substitute unless the other tow truck is from the same company. The tow company may request the assistance of another authorized rotation tow company if needed. This request should be made and approved through the department's shift supervisor.

4. When called, the tow truck company (or representative) shall provide the availability of their services, in a relatively timely period, and without screening. Once availability is determined, more details should then be provided to the tow truck company (or representative).

5. If a tow truck company (or representative) refuses any request for a tow, without reasonable justification, that may constitute grounds for an immediate one call suspension from the rotation list for that class/type of wrecker. Numerous documented refusals may constitute grounds for longer suspension periods, including the possibility of permanent removal from the rotation list.

a. If, for any justifiable reason, tow truck operators are unable to respond when summoned, they must immediately notify the department and have themselves "inactivated" on the tow rotation and shall not summon a substitute. Repeated instances of a tow company failing to respond may subject the tow company to removal from the rotation list.

6. Interference with commissioned officers at the scene or failure to comply with the officer's instructions is prohibited. No tow truck owner, operator, or employee shall be required to follow a directive or order that is unsafe or beyond the operational standard or capacity of any equipment being used in cleanup or in the removing of the roadway hazard. If a tow truck owner or operator refuses to follow a directive or order because of an unsafe condition, no adverse action by a law enforcement agency shall be taken against such owner or operator including removal from any rotation list.

7. No tow truck operator shall require the vehicle's owner/operator to have his vehicle repaired by the towing company as a condition of the towing agreement.

8. No operator shall charge for service not performed or make duplicate charges.

9. No operator shall charge for services which are not itemized and documented on the invoice.

10. No operator shall make repairs or alterations to wrecked or disabled vehicles without prior authorization of the owner except for that which is necessary in an emergency to permit vehicle towing.

11. Operators must notify the department's dispatch before proceeding to any call from a motorist when the call may involve a crash or an impaired driver.

12. Operators shall comply with the provisions set forth in R.S. 32:1711 et seq., and LAC 55:I.1901 et seq., relative to the storage and release of motor vehicles.

13. No operator shall use any information obtained over a police monitoring device for the purposes of soliciting towing services.

H. Classification of Tow Trucks

1. Operational capacities of each tow truck must have a manufacturer's rating. The minimum standards of each tow truck shall be determined by the manufacturer's specifications for the capabilities and capacities of the tow truck and all towing equipment. Tow trucks shall not be permitted to haul any vehicle/cargo combination in excess of its rated gross vehicle weight (GVW) or class.

2. The following classifications are taken from the TRAA Vehicle Identification Guide: (The TRAA Vehicle Identification Guide refers to the slide back and tilt bed car carriers, as car carriers in the light and medium duty tow truck classes.).

a. Light Duty Tow Trucks (10,000 lbs. or less GVW—4 tires)

Class 1 vehicle	(6,000 lbs. or less GVW–4 tires)
Class 2 vehicle	(6,001–10,000 lbs. GVW–4 tires)

i. The towing company shall own and maintain for service at least one light or medium duty tow truck or slide back car carrier.

ii. Operators of light duty tow trucks shall maintain equipment adequate to winch and transport vehicles weighing up to 10,000 pounds. The 10,000 pound maximum limit includes the towed vehicle's weight plus any cargo on board.

iii. Tow truck minimum qualifications:

(a). GVW rating of not less than 10,001 pounds as rated by the manufacturer. Tow trucks manufactured prior to 2007 shall have a GVW rating of not less than 10,000 pounds;

(b). minimum of 60 inches from rear of cab to center of rear axle;

(c). adequate service brake system for normal and adverse towing conditions;

(d). parking brake system separate from the service brakes maintained in proper working order;

(e). dual mounted rear wheels and tires.

iv. Boom and winch minimum specifications (bare drum):

(a). boom rating not less than 8,000 pounds;

(b). power winch rated not less than 20,000 pounds, dual winches must have a minimum of 150 feet wire rope per winch with a breaking strength of 21,000 pounds and 1/2 inch in diameter.

(c). at least 100 feet of wire or synthetic rope, except that a slide back and tilt bed carrier may have only 50 feet of wire or synthetic rope, with a minimum diameter of 3/8 inch, rated at a minimum of 12,000 pounds breaking strength.

v. Required accessories:

(a). dollies or supplementary wheels;

(b). minimum of 20 feet of chain complete with attached 5/16 inch diameter hooks of either high test or alloy quality;

(c). a minimum of 2 snatch blocks;

(d). towing sling or towing hitch rated to the capacity of towing vehicle.

vi. Car carrier qualifications:

(a). manufacturer's rated capacity of not less than 10,000 pounds GVW with a minimum of 102inches to center of rear axle from back of the cab;

(b). one power winch of not less than 8,000 pounds capacity;

(c). at least 50 feet of 3/8 inch cable, rated at a minimum of 12,000 pounds breaking strength;

(d). a 16 foot or longer hydraulically-operated sliding bed;

(e). a minimum of one snatch block.

b. Medium Duty Tow Trucks (10,001–26,000 lbs. GVW—6 tires or more)

Class 3 vehicle	(10,001–14,000 lbs. GVW—6 tires or more)
Class 4 vehicle	(14,001–16,000 lbs. GVW—6 tires or more)
Class 5 vehicle	(16,001–19,500 lbs. GVW—6 tires or more)
Class 6 vehicle	(19,501–26,000 lbs. GVW—6 tires or more)

i. The towing company shall own and maintain for service at least one light or medium duty tow truck or slide back carrier.

ii. Operators of medium duty tow trucks shall maintain equipment adequate to winch and transport vehicles weighing up to 26,000 pounds. The 26,000 pound maximum limit includes the towed vehicle's weight plus any cargo on board.

iii. Tow trucks minimum qualifications:

(a). minimum of 72 inches from rear of cab to the center of the rear axle;

(b). four-speed manual or automatic transmission;

(c). adequate service brake system for normal and adverse towing conditions. Tow trucks with air brakes, air-assisted mechanical or hydraulic, or completely hydraulic brakes must have a transfer system capable of supplying air to the brake system of the tow truck;

(d). a separate parking brake system maintained in good working order;

(e). dual mounted wheels and tires, single or tandem rear axle.

iv. Boom and winch minimum specifications (bare drum):

(a). boom rating not less than 20,000 pounds;

(b). power winch rated not less than 20,000 pounds, dual winches must have a minimum of 150 feet wire or synthetic rope per winch with a breaking strength of 21,000 pounds and 1/2 inch in diameter.

v. Required accessories:

(a). dollies or supplementary wheels;

(b). at least 25 feet of 3/8 inch chain with 3/8 inch hooks attached, may be in 10 foot lengths and of either high test or alloy quality;

(c). at least 2 snatch block;

(d). towing sling or hitch rated to wrecker capacity.

vi. Car carrier qualifications:

(a). rated capacity of not less than 15,000 pounds with 102 inches minimum from rear of cab to rear axle;

(b). one power winch rated for at least 8,000 pounds;

(c). at least 50 feet of 3/8 inch cable or synthetic rope;

(d). an 18 foot or longer hydraulically-operated slide back and tilt bed;

(e). one snatch block, 8,000 pounds capacity.

c. Heavy Duty Tow Trucks (26,001 lbs. and over GVW—6 tires or more)

Class 7 vehicle	(26,001–33,000 lbs. GVW—6 tires or more)
Class 8 vehicle	(33,001 and over GVW—10 tires or more)

i. The towing company may own and maintain for service at least one heavy duty tow truck in addition to at least one light or medium duty tow truck.

ii. Operators of a heavy duty tow truck shall maintain equipment adequate to winch and transport vehicles and vehicle combinations that weigh 26,001 pounds or more.

iii. Tow trucks minimum qualifications:

(a). minimum of 102 inches from rear of passenger cab to the center of the rear axle or bogie on tandem trucks;

(b). dual mounted wheels and tires on single or tandem axles;

(c). adequate service brake system, compressed air only, capable of controlling movement of vehicles under normal and adverse towing conditions and an air transfer system capable of supplying sufficient pressure to the brakes of the towed vehicle;

(d). a separate parking brake system, maintained in proper order.

iv. Boom and winch minimum specifications (bare drum):

(a). minimum boom rating of 50,000 pounds;

(b). power winch system with total, symmetrical capacity of 50,000 pounds;

(c). minimum of 200 feet of wire or synthetic rope per winch of at least 9/16 inch diameter and rated at breaking strength of 27,000 pounds.

v. Required accessories:

(a). at least 20 feet of 3/8 inch chains with hooks attached of either high test or alloy quality;

(b). at least 75 feet of auxiliary lines properly maintained and outfitted with the necessary transfer fittings;

(c). heavy duty truck towing hitch;

(d). at least 4 snatch blocks.

d. Hazardous material recovery and movers:

i. must meet minimum requirements of the class of tow truck that is required for the recovery, as mentioned in this order;

ii. must comply with LRS 32:1504 et seq.;

iii. must have nylon recovery straps;

iv. must have the necessary equipment to perform the services required in a safe and efficient manner;

v. all operators must obtain the minimum certification and training as required by OSHA and NFPA as well as any required annual re-certification. Proof of operator's certification may be checked by law enforcement officials at the scene of any hazardous materials incident.

I. Penalties for Towing Violations

1. The department's head or his/her designee shall investigate complaints alleging violation of state law, department policy and procedure (including Towing Guidelines and Operational Requirements).

2. A violation of the aforementioned may result in civil penalties being levied against the tow company as well as suspension or removal from the rotation list.

3. All complaints made against authorized operators shall be made directly to the department head or designee. Appropriate action may be taken by the department head.

a. Any tow truck owner may submit a written appeal to the department head requesting a review of the investigation and/or any suspension from the rotation list.

b. Review hearings will be held within 10 business days after a request is made.

4. Violations of these rules may result in penalties as follows:

a. a "one call" suspension for refusals or communication violations (non appealable);

b. first violation—a maximum of 15 days suspension from the rotation list;

c. second violation in 12 months—a maximum of 30 days suspension from the rotation list;

d. third violation in 12 months—a maximum of 60 days suspension from the rotation list;

e. fourth violation in 12 months—permanent suspension from the rotation list;

f. any violation of state law or parish municipal ordinance may be grounds for immediate suspension from the rotation list, and upon conviction, permanent exclusion.

J. Towing-Administrative Hearing

1. State law requires that the owner of any vehicle towed by a public agency shall have the right to an administrative hearing to determine if the towing of the vehicle was proper. The owner of the vehicle must make request for a hearing within 10 days of the date the owner was notified as per R.S. 32:1720. The purpose of the hearing is to determine the validity of the tow.

2. The designated department representative shall avail themselves to any person requesting such a hearing. These hearings may be as informal as a review of the circumstances surrounding the tow and a response to the inquiring party as to the department's determination.

AUTHORITY NOTE: Promulgated in accordance with R.S. 32:1714.

HISTORICAL NOTE: Promulgated by the Department of Public Safety and Corrections, Office of the State Police, LR 32:863 (May 2006), amended LR 36:546 (March 2010), LR 36:2580 (November 2010), LR 40:800 (April 2014).

§1949. Severability Clause

A. If for any reason a provision of these rules is declared invalid, the invalidity of that provision shall not affect the validity of the remaining rules or other provisions thereof.

AUTHORITY NOTE: Promulgated in accordance with R.S. 32:1714.

HISTORICAL NOTE: Promulgated by the Department of Public Safety and Corrections, Office of the State Police, LR 32:864 (May 2006).

Chapter 21. Underground Utilities

§2101. Purpose

A. It is the purpose of these rules to promote the protection of property, workmen, and citizens in the immediate vicinity of an underground facility or utility from damage, death, or injury and to promote the health and well-being of the community by preventing the interruption of essential services which may result from the destruction of, or damage to, underground facilities or utilities. The purpose of this rule is to further provide for the enforcement of the Louisiana Underground Utilities and Facilities Damage Prevention Law. An advisory committee composed of representatives from the relevant industries, state government, and the regional notification centers shall be formed to assist in implementation of these rules.

B. The advisory committee referenced in Subsection A above is hereby established and shall be composed of the following members:

1. a representative of each certified Louisiana regional notification center;

2. a representative of the Department of Public Safety;

3. a representative of the Department of Environmental Quality;

4. a representative of the Right-to-Know Unit, Office of State Police;

5. a representative of the Department of Natural Resources, Pipeline Division;

6. a representative of the Office of State Fire Marshal;

7. a representative of the Public Service Commission;

8. a representative of the Louisiana Chemical Association;

9. a representative of the Louisiana Gas Association;

10. a representative of the Louisiana Municipal Association;

11. a representative of the Louisiana Forestry Association;

12. a representative of the Louisiana Home Builders Association;

13. a representative of the Louisiana Rural Water Association;

14. a representative of the Louisiana Cable and Telecommunications Association;

15. a representative of the Louisiana Electric Cooperatives Association;

16. A representative of the Mid Continent Oil and Gas Association;

17. a representative of the Louisiana Farm Bureau Federation;

18. a representative of the Louisiana Associated General Contractors;

19. a representative of the Louisiana Common Ground Alliance;

20. a representative of offshore facility owners and operators.

AUTHORITY NOTE: Promulgated in accordance with R.S. 40:1749.11 et seq.

HISTORICAL NOTE: Promulgated by the Department of Public Safety and Corrections, Office of State Police, LR 26:92 (January 2000), amended by the Department of Public Safety and Corrections, Office of State Police, Transportation and Environmental Safety Section, LR 41:1772 (September 2015).

§2103. Definitions

A. For the purposes of these rules, the following terms shall have the meanings ascribed to them in this Section.

Damage—any defacing, scraping, gorging, breaking, cutting, or displacement of, impact upon or removal of an underground facility or utility or its means of primary support.

Demolisher—any person engaged in the act of demolishing as defined in R. S. 40:1749.12(2).

Demolition—the total or partial wrecking, razing, rendering, moving, or removing of any building or structure, movable or immovable.

Department—the Department of Public Safety and Corrections, Public Safety Services.

Emergency—any crisis situation which poses an imminent threat or danger to life, health, or property and requires immediate action.

Excavation or *Excavate*—any operation for the purpose of movement or removal of earth, rock, or other materials in or on the ground by the use of powered or mechanical or manual means, including pile driving, digging, blasting, auguring, boring, back filling, dredging, compressing, plowing-in, trenching, ditching, tunneling, land-leveling, grading, and mechanical probing.

Excavator—any person who engages in excavation operations.

Inclement Weather—weather that prohibits or impedes a worker's use of his locating equipment or causes undue risk

to himself or his equipment such as lightning, heavy rain, tornadoes, hurricanes, floods, sleet, snow, or flooding conditions.

Locator—any person employed to determine the specific location of the operator's underground facility or utility within the area specified through a notice served by a regional notification center.

Mark by Time—the date and time provided by the regional notification center by which the utility operator is required to mark the location or provide information to enable an excavator, using reasonable and prudent means, to determine the specific location of the facility as provided for in R.S. 40:1749.14(D).

Operator—any person, individual, governmental agency or political subdivision or their agents, joint venture, firm, partnership, association, or corporation who owns or operates, a public or private underground facility or utility which furnishes a service or material or stores, transports, or transmits electric energy, steam, oil, natural gas, gas, mixture of gases, petroleum, petroleum products, hazardous or flammable fluids, toxic or corrosive fluids/gases, including telephone or telegraph system, fiber optic electronic communication systems, or water or water systems, or drainage, sewer systems, or traffic control systems or other items of like nature.

Person—an individual, firm, partnership, association, corporation, joint venture, municipality, governmental agency, political subdivision, or agent of the state or any legal representative, thereof.

Regional Notification Center—may be any one of the following:

a. an entity designated as nonprofit by the Internal Revenue Service under Section 501(c)(4) of the Internal Revenue Code and which is organized to protect its members from damage and is certified by the Department of Public Safety and Corrections in accordance with the Chapter; or

b. an organization of operators, consisting of two or more separate operators who jointly have underground facilities or utilities in three or more parishes in Louisiana, which is organized to protect its own installation from damage, and has been certified by the Department of Public Safety and Corrections in accordance with this Chapter; or

c. an operator who has underground facilities or utilities in a majority of parishes in Louisiana and is organized to protect its own installation from damage, and has been certified by the Department of Public Safety and Corrections in accordance with this Chapter.

Service Line or Lines—underground facilities or utilities which provide power, gas, natural gas, communication or water capabilities to a building or structure of buildings or group of structures.

Underground Facility or Utility—any pipe, conduit, duct, wire, cable, valve, line, fiber optic equipment, or other structure which is buried or placed below ground or submerged for the use in connection with storage, conveyance, transmission or protection of electronics communication system, telephone or telegraph system, or fiber optic, electric energy, oil, natural gas, gases, steam, mixture of gases, petroleum, petroleum products, hazardous or flammable fluids/gases, toxic or corrosive fluids/gases, hazardous fluids/gases or other substances of like nature or water or water systems, sewer systems, or traffic, drainage control systems, or other items of like nature.

AUTHORITY NOTE: Promulgated in accordance with R.S. 40:1749.11 et seq.

HISTORICAL NOTE: Promulgated by the Department of Public Safety and Corrections, Office of State Police, LR 26:92 (January 2000), amended LR 40:1111 (June 2014).

§2105. Regional Notification Certification Process

A. The regional notification program must have or be able to demonstrate the following:

1. toll free nationwide telephone number;

2. specifically defined geo-political service area with a goal of no overlap;

3. mechanism for law enforcement to verify locate request information;

4. establish a formal member contractual agreement and submit for approval;

5. locate request tracking process that includes a specific numbering system for each locate request;

6. provide timely transmission of notifications to facility owner/operator;

7. provide locate request information upon inquiry by law enforcement;

8. establish a process to handle emergency locate requests;

9. validation process for owner/operator member's map data base;

10. agree to participate in the Underground Utilities/Facilities Damage Prevention Advisory Committee

11. develop standard operating procedures and training manuals for routine and emergency operations;

12. voice recording of all incoming locate request calls and voice out calls;

13. ability to produce records of all outgoing notification calls;

14. record retention procedures in compliance with R.S. 40:1749.13;

15. establish a pro-active public awareness and damage prevention education.

B. Upon establishing its ability to meet the above requirements, the regional notification center shall be certified by the department.

C. The department may charge a fee for the certification process of $2,500.

D. An entity operating in this state as an authorized regional notification center prior to and upon the effective date of this Subsection shall have six months from the date of final adoption of these rules and regulations to seek and obtain compliance certification from the Department of Public Safety and Corrections. Failure to obtain such certification shall result in the cessation of activities by the regional notification center.

E. Any entity not operating in this state as an authorized regional notification center prior to and upon the effective date of this Subsection shall obtain compliance certification from the Department of Public Safety and Corrections prior to performing the operations of a regional notification center in or for this state.

AUTHORITY NOTE: Promulgated in accordance with R.S. 40:1749.11 et seq.

HISTORICAL NOTE: Promulgated by the Department of Public Safety and Corrections, Office of State Police, LR 26:93 (January 2000).

§2106. Investigation Procedure

A. In accordance with R.S. 40:1749.23(D)(5), established investigative procedures shall adhere to the minimal standards established by the Police Officer Standards and Training (POST) and be demonstrated by an officer's completion of a certified law enforcement training course. The procedures may include, but are not limited to; observation, interrogation, documentation, collection, intervention, interdiction, mitigation, remediation, litigation, analyzation and recommendation.

B. Investigative procedures permit department investigators to collect and record information, as outlined in LAC 55:I.2106.C, on a standard investigation form; empowering the department to investigate a complaint, issue a citation and adjudicate the complaint.

C. The department's standard investigation form, titled hazardous materials incident report, may include, but is not limited to, the following:

1. excavator:

a. name;

b. address;

c. representative and title;

d. primary and secondary contact phone numbers;

e. regional notification center dig ticket number;

f. status of dig ticket;

g. status of markings;

2. operator:

a. name;

b. address;

c. representative and title;

d. primary and secondary contact phone numbers;

e. regional notification center dig ticket number;

f. status of dig ticket;

g. status of markings;

3. effects on general public:

a. chemical name;

b. hazard class;

c. amount released—potential;

d. injuries;

e. fatalities;

f. fire;

g. road closures;

h. evacuations;

i shelter in place;

j. remediation, mutual aid, and additional agencies on-scene;

4. details:

a. the department's investigator may provide additional information and data relevant to the investigation.

AUTHORITY NOTE: Promulgated in accordance with R. S. 40:1749.11 et seq.

HISTORICAL NOTE: Promulgated by the Department of Public Safety and Corrections, Office of State Police, LR 40:1111 (June 2014).

§2107. Citation

A. The citation issued to a party alleged to be in violation of R.S. 40:1479 et seq., or these rules shall be uniform as developed by the department and may include the following:

1. the violation number;

2. the date of the incident;

3. the location of the incident;

4. the specific statute or regulation which is alleged to have been violated;

5. the penalty assessed to the responsible party based on the results of the department's investigation;

6. a brief description of the violation; and

7. an explanation of the responsible party's right to an administrative hearing.

AUTHORITY NOTE: Promulgated in accordance with R.S. 40:1749.11 et seq.

HISTORICAL NOTE: Promulgated by the Department of Public Safety and Corrections, Office of State Police, LR 26:93 (January 2000), amended LR 40:1111 (June 2014).

§2109. Collection of Data by the Department

A. The department may collect such data that will allow law enforcement agencies to determine the number of

existing violations and the results of the adjudication process.

AUTHORITY NOTE: Promulgated in accordance with R.S. 40:1749.11 et seq.

HISTORICAL NOTE: Promulgated by the Department of Public Safety and Corrections, Office of State Police, LR 26:93 (January 2000), amended LR 40:1112 (June 2014).

§2111. Establishment of Local Governmental Enforcement

A. Pursuant to R. S. 40:1749.11 et seq., and these rules, local government shall have the authority to enforce any and all provisions therein, except the certification process for the regional notification center and the establishment of the uniform citation.

AUTHORITY NOTE: Promulgated in accordance with R.S. 40:1749.11 et seq.

HISTORICAL NOTE: Promulgated by the Department of Public Safety and Corrections, Office of State Police, LR 26:93 (January 2000).

§2113. Civil Penalties

A. A person who is required by this Part to become a member of, participate in, or share the cost of, a regional notification center and who fails to do so shall be subject to a civil penalty of not more than $250 for the first violation and not more than $1,000 for each subsequent violation. A subsequent violation shall be deemed to have occurred if the person fails to become a member of, participate in, or share the cost of, a regional notification center as required within ninety days after issuance of a citation for the previous violation.

B. A person who participates in a regional notification center and who fails to mark or provide information regarding the location of underground utilities and facilities shall be subject to a civil penalty of not more than $1,000. A subsequent violation shall be deemed to have occurred if a person fails to provide information or markings within two years of the issuance of a prior citation for the same or similar conduct.

C. A person who is required by law to participate in a regional notification center and who fails to provide information or markings to indicate hazardous material as defined in Title 30 of the Louisiana Revised Statutes of 1950 shall be subject to the following:

1. for the first violation, a civil penalty of not more than $250;

2. for a second violation, a civil penalty of not more than $500;

3. for a third violation, a civil penalty of not more than $1,000;

4. for a fourth and each subsequent violation, a civil penalty of not less than $2,000 nor more than $25,000.

D. An excavator or demolisher who is unable to provide to law enforcement the locate request number assigned by the regional notification center for the specific excavation shall be considered to be in violation of R.S. 40:1749.13, shall stop all excavations immediately and shall be subject to the following:

1. for the first violation, a civil penalty of not more than $250;

2. for a second violation of a similar nature within a two-year period from the previous violation, a civil penalty of not more than $500;

3. for a third violation of a similar nature within a two-year period from a previous violation, a civil penalty of not more than $1,000;

4. for a fourth and each subsequent violation of a similar nature within a two-year period from the previous violation, a civil penalty of not less than $2,000 nor more than $25,000;

5. for any violation involving hazardous materials as defined in Title 30 of the Louisiana Revised Statutes of 1950, a civil penalty of not less than $2,000 nor more than $25,000;

6. an excavator or demolisher who is issued a citation for a violation shall immediately stop all excavation or demolition activity until the requirements of this Part are met. Failure to do so shall subject the excavator or demolisher to an additional citation and civil penalty of not more than $25,000 for each such subsequent citation issued.

AUTHORITY NOTE: Promulgated in accordance with R.S. 40:1749.11 et seq.

HISTORICAL NOTE: Promulgated by the Department of Public Safety and Corrections, Office of State Police, LR 26:93 (January 2000).

§2115. Report of Adjudication

A. Proceedings and adjudication for the levying of civil penalties under this law shall be conducted by the division of administrative law in accordance with regulations adopted pursuant to the Administrative Procedure Act.

B. A local governmental subdivision, except justice of the peace courts, enforcing the provisions of this Part may establish a procedure for adjudication of violations and levying of civil penalties in accordance with the provisions of this Part. Such procedure shall include:

1. the fixing of a schedule of civil penalties and costs for the various offenses within the limits of such penalties as are set by law;

2. providing that any person cited for a violation of the provisions of this Part may plead guilty or no contest before an officer designated by the local governmental subdivision;

3. that the adjudication shall conform to the requirements of the Administrative Procedure Act;

4. the final report of adjudication issued pursuant to R.S. 40:1749.23(D) shall be sent within 30 days to the department by certified mail return receipt requested.

AUTHORITY NOTE: Promulgated in accordance with R.S. 40:1749.11 et seq.

HISTORICAL NOTE: Promulgated by the Department of Public Safety and Corrections, Office of State Police, LR 26:94 (January 2000).

§2117. Collection and Distribution of Fees, Fines, or Civil Penalties: Underground Damages Prevention Fund

A. All civil penalties shall be paid to the state treasury for credit to the underground damage prevention fund, and shall be disbursed as follows:

1. 34 percent shall be retained by the underground damages prevention fund;

2. upon request for disbursement by the agency, within one year of the civil penalty being deposited into the underground damages prevention fund, funds shall be disbursed as follows:

a. 50 percent shall be disbursed to the local law enforcement agency that issued the citation if the citation was adjudicated by the local governmental subdivision; or

b. 50 percent shall be disbursed to the state law enforcement agency that issued the citation if the citation was adjudicated by the state; or

c. 25 percent shall be disbursed to the local law enforcement agency that issued the citation and 25 percent retained in the fund if such citation was adjudicated by the state;

3. if the local governing authority:

a. is a member of or participates in a regional notification center; upon request for disbursement by the local governing authority within one year of the civil penalty deposited into the underground damages prevention fund, 16 percent shall be disbursed to the local governing authority of the area in which the violation occurred to be used solely for purposes of compliance with Louisiana Underground Utilities/Facilities Damage Prevention Law;

b. is not a member of nor participates in a regional notification center, but establishes and operates a violations bureau pursuant to R.S. 1749.23(D), then upon request for disbursement by the local governing authority within one year of the civil penalty deposited into the underground damage prevention fund, 16 percent shall be disbursed to the local governing authority for each violation adjudicated by the violations bureau of that local governing authority;

c. otherwise, the amount shall be retained in the underground damages prevention fund and distributed per §2117.A.1 and 2 of this Part.

B. All funds received by the Department of Public Safety and Corrections under the provisions of this Part shall be retained in the Underground Damages Prevention Fund.

C. After compliance with the requirements of Article VII, Section 9(B) of the Constitution of Louisiana relative to the Bond Security and Redemption Fund, and prior to monies being placed in the state general fund, an amount equal to that deposited as required by Subsection B of this Section shall be credited to a special fund hereby created in the state treasury to be known as Underground Damages Prevention Fund. After disbursements as authorized in this Section, the monies in this fund shall be used solely as provided by Subsection D of this Section and only in the amounts appropriated by the legislature. All unexpended and unencumbered monies in this fund at the end of the fiscal year shall remain in such fund. The monies in this fund shall be invested by the state treasurer in the same manner as monies in the state general fund and interest earned on the investment of these monies shall be credited to this fund, following compliance with the requirement of Article VII, Section 9(B) relative to the Bond Security and Redemption Fund.

D. The monies in the Underground Damages Prevention Fund shall be used by the Department of Public Safety and Corrections solely for enforcement of the provisions of the Louisiana Underground Utilities/Facilities Damage Prevention Law, and may include expenditure for information and programs designed to enhance awareness of duties and responsibilities of persons under the provisions of this statute.

AUTHORITY NOTE: Promulgated in accordance with R.S. 40:1749.11 et seq.

HISTORICAL NOTE: Promulgated by the Department of Public Safety and Corrections, Office of State Police, LR 26:94 (January 2000), amended LR 40:1112 (June 2014).

Chapter 23. Weights and Standards

§2301. Weights and Standards Mobile Police Force

A. Within the Office of State Police there shall be a Weights and Standards Mobile Police Force which shall perform the functions of the state related to the enforcement of R.S. 32:380-389, and R.S. 47:718, and the provisions of Chapter 4 of Subtitle II of Tile 47 relating to trucks, trailers, and semi-trailers of the Louisiana Revised Statutes of 1950 and these regulations adopted pursuant thereto.

B. The Weights and Standards Mobile Police Force is authorized to carry weapons and to make arrests in the enforcement of these regulations, and in that regard, shall have the same authority and powers conferred by law upon other law enforcement officers of this state; however, no member of the Weights and Standards Mobile Police Force shall be authorized to carry a weapon until the member has received P.O.S.T. certification training.

C. The Weights and Standards Police Force and the state police shall have concurrent authority to enforce the provisions of R.S.32:380-389 and these regulations.

AUTHORITY NOTE: Promulgated in accordance with R.S. 32:380-389.

HISTORICAL NOTE: Promulgated by the Department of Public Safety and Corrections, Office of State Police, LR 26:2627 (November 2000).

§2303 Definitions

A. For the purposes of these rules, the following terms shall have the meanings ascribed to them in this Section.

Axle Group—a combination of two or more consecutive axles considered together in determining their combined load effect on a highway (as tandem, tridum, or quadrum axle groups).

Axle with Single-Mounted Tires—any single or individual axle which is composed of one tire on each side of the vehicle (as opposed to dual-mounting).

Department—Louisiana Department of Public Safety and Corrections, Public Safety Services

Designated Truck Routes: (National Network—NN)—highways designated by the secretary of the Louisiana Department of Transportation and Development in accordance with the Federal Surface Transportation Assistance Act of 1982 that includes provisions for truck-semi trailer-trailer combinations and maximum vehicle width of 8 feet, 6 inches.

Domicile—the fixed, permanent, and principal residence for legal purposes.

Dromedary Unit—a load carrying compartment on a truck-tractor located between the cab and fifth wheel.

Dummy Axle—a single axle attached independently to the frame of a vehicle and so designed and placed as to indicate the appearance of and to carry a uniformly distributed load of a normal axle group.

Gross Weight—the weight of a vehicle and/or combination of vehicles plus the weight of any load thereon.

Individual Axle—any of the two, three, or four axles which make up the tandem, tridum, or quadrum axle groups.

Interstate Commerce—trade, traffic, or transportation in the United States:

a. between a place in a state and a place outside of such state (including a place outside of the United States);

b. between two places in a state through another state or a place outside of the United States; or

c. between two places in a state as part of trade, traffic, or transportation originating or terminating outside the state or the United States.

Intrastate Commerce—any trade, traffic, or transportation in any state which is not described in the term *interstate commerce*.

Length—the total longitudinal dimension of a single vehicle, a trailer, or a semi-trailer. Length of a trailer or semi-trailer is measured from the front of the cargo-carrying unit to its rear and includes load-holding devices thereon.

Loose Material—dirt, sand, gravel, or other material that is capable of blowing spilling from a vehicle as a result of movement or exposure to air, wind currents, or weather but shall not include agricultural products in their natural state or wood chips.

Quadrum Axle—any four consecutive axles whose centers are 40 or more inches but not more than 96 inches apart. A quadrum axle must be designed to equalize the load between the axles.

Single Axle—any single axle or any assembly of two or more axles whose centers are less than 40 inches apart.

Semi-Trailer—any single vehicle without motive power designed for carrying property and passengers and so designed in conjunction and used with a motor vehicle that some part of its own weight and that of its own load rests or is carried by another vehicle and having one or more load-carrying axles.

Solid Waste—includes residential solid waste, agricultural waste, commercial solid waste, construction or demolition debris, garbage, industrial solid waste, trash, white goods, wood waste, and yard trash.

Stinger-Steered Combination—a truck-tractor semi-trailer wherein the fifth wheel is located on a drop frame located behind and below the rear-most axles of the power unit.

Tandem Axle—any two consecutive axles whose centers are 40 or more inches but not more than 96 inches apart. A tandem axle must be designed to equalize the load between axles.

Trailer—any single vehicle without motive power designed for carrying property or passengers wholly on its own structure, drawn by a motor vehicle which carries no part of the weight and load of the trailer on its own wheels and having two or more load carrying axles.

Trunion Axle—an axle configuration with two individual axles mounted in the same transverse plane, with four tires on each axle, connected at a pivot point which allows each individual axle to oscillate in a vertical plane to provide constant and equal weight distribution on each individual axle.

Trunion Axle Group—two or more consecutive trunion axles which are individually attached to, and/or articulated, from the vehicle by a weight equalizing suspension system.

Variable Load Suspension Axles—axles which can be regulated by the driver of the vehicle either through the use of an in-cab valve or switch or by turning a valve on the outside of the truck. These axles are controlled by hydraulic and air suspension systems, mechanically, or by a combination of these methods.

Vehicle—any device by which a person or things may be transported upon a public highway or bridge. A trailer or semi-trailer shall be a separate vehicle.

Width—the total outside transverse dimension of a vehicle including any load or load-holding devices thereon, but, excluding approved safety devices and tire bulge due to load.

AUTHORITY NOTE: Promulgated in accordance with R.S. 32:380-389.

HISTORICAL NOTE: Promulgated by the Department of Public Safety and Corrections, Office of State Police, LR 26:2627 (November 2000), amended LR 28:1803 (August 2002).

§2305. Width

A. Safety-devices shall include flags, lights, and/or reflectors not to project more than 12 inches beyond the width of the vehicle's body.

B. Vehicles and/or loads which exceed the legal width shall meet the following requirements.

1. The owner of the vehicle shall obtain an oversize permit.

2. Warning flags are required on vehicles and loads which exceed the legal width. There must be flags at the following points.

a. Four flags, two on the front edges and two on the rear edges, must be attached at the widest points on the part of the vehicle or load which exceeds the legal width.

b. A load which projects to only one side of a vehicle of legal width, shall have at least one flag to the front edge of the load, and at least one flag to the rear of the load provided each flag meets the requirement set forth herein; except a load which measures 3 feet or less from front most portion to the rear most portion shall have at least one flag which meets the requirements set forth herein affixed to each side of the projecting load.

c. Flags must be attached on any other portion of the vehicle or load which is wider than the flagged front or rear edges.

d. All warning flags must be red/fluorescent orange and at least 18 inches square. Flags must either be securely fastened by at least one corner or securely mounted on a staff which keeps the flag upright.

3. Vehicles and loads exceeding 10 feet in width must display two signs with the wording "OVERSIZE LOAD".

a. One sign must be on the front of the vehicle. The other must be on the rear of the load or if that does not result in an easily read sign, then the sign must be on the rear of the vehicle.

b. All warning signs must be at least 7 feet long and 18 inches high. The background must be yellow and the lettering black. Letters must be at least 10 inches high with a 1 1/2-inch brush stroke.

4. All vehicles and loads (which exceed the legal width) with permits which have not been prohibited from traveling at night or during inclement weather must be equipped with the following lights.

a. Two amber lights must be attached at the widest points on the front edges of the over width part of the vehicle or load, and these lights must be visible from both the front and the side.

b. Two red lights must be attached at the widest points on the rear edges of the over-width part of the vehicle or load, and these lights must be visible from the rear and the side.

c. An amber light must be attached on any part of the vehicle or load which is wider than the front or rear edges, and this light must be visible from the front, side, and rear.

d. A single amber light on each side, visible from the front, side and rear, may be used if the over-width part of a vehicle or load does not exceed 3 feet from front to back. If the over-width part is at or near the rear of the vehicle, this light may be red and visible from the front, side, and rear.

5. Two or more lights may be combined if the resulting light still conforms to the requirements and its effectiveness is not hurt by the combination.

6. All lights must be visible from a distance of 500 feet and must be of types approved for such use by the Department of Public Safety and Corrections. Approval can be obtained at state police troops.

AUTHORITY NOTE: Promulgated in accordance with R.S. 32:380-389.

HISTORICAL NOTE: Promulgated by the Department of Public Safety and Corrections, Office of State Police, LR 26:2628 (November 2000).

§2307. Length

A. Warning flags are required on vehicles and loads which exceed the legal length, or which have a rear overhang of more than 4 feet. There must be flags at the following points.

1. If the over-length or projecting portion is 2 feet wide or less, one flag must be located at the extreme rear end of the load.

2. If the over-length or projecting portion is wider than 2 feet, two flags at the extreme rear end of the load must be located to indicate maximum width.

3. All warning flags must be red/fluorescent orange and at least 18 inches square. Flags must either be securely fastened by at least one corner or securely mounted on a staff which keeps the flag upright.

B. Vehicles and loads exceeding legal length or the legal rear end overhang must display two signs with the wording "OVERSIZE LOAD." These signs must be on the sides of the overhanging part of the load or, if this is not possible, then the signs must be on the sides of the vehicle.

C. Vehicles and loads exceeding the legal front end overhang must display one sign with the wording "OVERSIZE LOAD." This sign must be displayed on the front of the vehicle. If the overhang clears the pavement by 6 feet or more, no sign is required.

D. All warning signs must be at least 7 feet long and 18 inches high. The background must be yellow and the lettering black. Letters must be at least 10 inches high and with a 1 1/2-inch brush stroke.

E. Louisiana also requires the following lights at night and during inclement weather on vehicles and loads which are over length or have rear end overhangs of more than 4 feet or greater.

1. Two red lights, one on each side, must be visible from the side and indicate the extreme rear of the vehicle or load.

2. Two red lights, one on each side, and two red reflectors, one on each side, must be visible from the rear, must be located on the rear of the vehicle or load, and must indicate maximum width of the over-length or projecting part. However, if the over-length or projecting part is 2 feet wide or less, one red light and one red reflector is sufficient.

F. Two or more lights may be combined if the resulting light still conforms to the requirements and its effectiveness is not hurt by the combination.

AUTHORITY NOTE: Promulgated in accordance with R.S. 32:380-389.

HISTORICAL NOTE: Promulgated by the Department of Public Safety and Corrections, Office of State Police, LR 26:2628 (November 2000).

§2309. State Police Escorts

A. State police escorts are required for all vehicles and loads which are:

1. over 16 feet wide on a two-lane highway;

2. over 16 feet wide on a multi-lane highway;

3. over 125 feet in length.

B. Escorts should be arranged at the troop nearest the beginning of the movement.

C. State police escorts must be used for escorted loads that exceed the above dimensions on all state highways outside of municipality limits, and also inside city limits if on state highway.

D. Travel through metropolitan areas may require city or parish escorts and/or permits. Contact with city or parish authorities is the responsibility of the hauler for possible requirements and/or restrictions.

E. Private escorts are required for all vehicles and loads:

1. over 12 feet wide and up to 16 feet wide on a two-lane highway;

2. over 12 feet wide and up to 16 feet wide on a multi-lane highway;

3. over 90 feet long and up to 125 feet long.

F. An escort vehicle may escort two over-length vehicles or loads, but only one over-width vehicle or load.

G. All private escort vehicles must have a Louisiana Approved Escort Vehicle Permit. Companies domiciled outside of the state of Louisiana must pay a $10 fee for a Louisiana Approved Escort Vehicle Permit.

AUTHORITY NOTE: Promulgated in accordance with R.S. 32:380-389.

HISTORICAL NOTE: Promulgated by the Department of Public Safety and Corrections, Office of State Police, LR 26:2629 (November 2000).

§2311. Care of Vehicle Load

A. Vehicle owner/operator shall ensure that the vehicle is equipped with equipment in proper working condition for care of load to prevent escape of loose material. The driver of the vehicle is responsible for the proper installation of equipment provided by owner to prevent the escape of loose materials.

AUTHORITY NOTE: Promulgated in accordance with R.S. 32:380-389.

HISTORICAL NOTE: Promulgated by the Department of Public Safety and Corrections, Office of State Police, LR 26:2629 (November 2000).

§2313. Farm Vehicles and Equipment

A. Farm vehicles and equipment, except draglines and bulldozers, being operated and/or transported for bona fide agricultural purposes or the transportation of farm vehicles and equipment to be used for normal farm purposes by persons transporting such farm equipment or machinery for distances not to exceed 50 miles from the point of origin shall be exempt from the requirements for width, height, length, and for trailers and towed vehicles, but shall not be exempt from any weight limitations.

AUTHORITY NOTE: Promulgated in accordance with R.S. 32:380-389.

HISTORICAL NOTE: Promulgated by the Department of Public Safety and Corrections, Office of State Police, LR 26:2629 (November 2000).

§2315. Weight Limitations

A. Legal Limitations

1. The maximum legal axle weights on interstate highways are:

a.	single axles	20,000 pounds
b.	tandem axles	34,000 pounds
c.	tridum axles	42,000 pounds
d.	quadrum axles	50,000 pounds

2. Axle variances of 2,000 pounds for single axles and 3,000 pounds for tandem, tridum, and quadrum axles are allowed on non-interstate highways. Therefore, the maximum legal weights on non-interstate highways are:

a.	single axles	22,000 pounds
b.	tandem axles	37,000 pounds
c.	tridum axles	45,000 pounds
d.	quadrum axles	53,000 pounds.

3. The maximum legal weight on a tire is 650 pounds per inch width of tire.

4. The sum of the legal axle weights on a vehicle or combination of vehicles is its legal gross weight. But regardless of the number and type of axles the maximum legal gross weight of any vehicle or combination of vehicles (except a combination with a tridum or quadrum axle) is 80,000 pounds.

5. Regardless of the number and type of axles, the maximum legal gross weight of any combination of vehicles which has a tridum or quadrum axle is:

a. 83,400 pounds on interstate highways;

b. 88,000 pounds on non-interstate highways.

B. Vehicles operating on the interstate highway shall comply with the federal bridge formula subject to the following exceptions:

1. vehicles with Type Two axle configuration (three-axle combination with one single axle and one set of tandem axles); or

2. Type Six axle configuration (five-axle combination with one single axle and two sets of tandem axles); or

3. a vehicle with Type Eight axle configuration (six-axle combination with one single axle, one tandem axle, and one tridem axle);

4. or vehicles with Type Ten axle configuration (double bottom);

5. or Type Eighteen axle configuration (four-axle combination with one single axle and one set of tridem axles) carrying any of the following bulk commodities thereof:

a. forest products in their natural state;

b. lumber;

c. sand;

d. gravel;

e. agricultural products in their natural state;

f. loose or mixed concrete (including asphaltic or Portland cement); or

g. bulk liquid commodities.

C. Any truck fitted with a compactor body which is engaged in the collecting and hauling of solid waste shall not be assessed a penalty for exceeding the maximum permissible gross weight if the waste is wet and the location from which the waste was collected had received measurable precipitation within 24 hours prior to collection.

D. The owner or operator of a vehicle which exceeds the maximum allowable axle weights shall be permitted to shift the load as long as no part of the shipment is removed and only if the shift can be performed safely and within a reasonable period of time.

AUTHORITY NOTE: Promulgated in accordance with R.S. 32:380-389.

HISTORICAL NOTE: Promulgated by the Department of Public Safety and Corrections, Office of State Police, LR 26:2629 (November 2000), amended LR 28:1803 (August 2002).

§2317. Special Permits

A. Special permits must be in the vehicle at all times of operation, and such permit shall be produced upon request by any police officer.

B. Violation of any terms or conditions of a special permit shall subject the driver and/or owner of the permitted vehicle to the penalties provided for in R.S. 32:388.

AUTHORITY NOTE: Promulgated in accordance with R.S. 32:380-389.

HISTORICAL NOTE: Promulgated by the Department of Public Safety and Corrections, Office of State Police, LR 26:2630 (November 2000).

§2319. Assessment of Civil Penalties

A. Any person who is determined by the superintendent of the department after reasonable notice and opportunity for a fair and impartial hearing held in accordance with the Administrative Procedure Act, to have committed an act that is a violation of these regulations (excluding §2315), is subject to a civil penalty of $100 per violation. Penalties for §2315 shall be computed in accordance with R.S. 32:388.

AUTHORITY NOTE: Promulgated in accordance with R.S. 32:380-389.

HISTORICAL NOTE: Promulgated by the Department of Public Safety and Corrections, Office of State Police, LR 26:2630 (November 2000).

§2321. Recovery of Civil Penalties

A. To enforce the collection of a civil penalty levied upon a person determined by the deputy secretary of the Department of Public Safety and Corrections to have committed an act that is a violation of these regulations, the deputy secretary:

1. may order the removal of the offending vehicle's license tag if the registration is from this state;

2. may seize any vehicle not registered within the state which is owned by the person or company in violation;

3. shall have the driver's or operator's license suspended for a violation(s) committed by the driver or operator.

B. The secretary shall enforce the provisions of Subsection A as follows.

1. The removal of a vehicle's license tag shall be completed and, upon remittance of the levied penalty, reinstated in a manner consistent with the procedures required by the Office of Motor Vehicles.

2. When the person or company fails to remit a levied civil penalty within 90 days subsequent to the seizure of a vehicle as authorized in this Section, the Department of Public Safety and Correction shall collect the penalty in a manner consistent with applicable portions of R.S. 32:521 et seq.

3. The suspension of a driver's license shall be completed and, upon remittance of the levied penalty, reinstated in a manner consistent with the provisions required by the Office of Motor Vehicles.

AUTHORITY NOTE: Promulgated in accordance with R.S. 32:380-389.

HISTORICAL NOTE: Promulgated by the Department of Public Safety and Corrections, Office of State Police, LR 26:2630 (November 2000).

§2323. Approval of Safety Devices

A. Pursuant to R.S. 32:384(D), every trailer and semi-trailer with a loaded gross weight capacity of up to 6,000 pounds shall be equipped with safety chains or another approved safety device. This statute requires that the safety device shall be securely attached to the towing vehicle when the trailer or semi-trailer is in motion, and shall be of sufficient strength to hold the trailer behind the towing vehicle in case the primary connection between the two vehicles detaches.

B. The above-mentioned safety device is to be approved by the department, as per R.S.32:384(E). In order to be approved, the device shall be produced, manufactured and/or constructed by a bonded and insured manufacturer of such equipment who carries product liability insurance and regularly produces safety devices of guaranteed quality. The manufacturer shall submit to the department certification from a bonded and insured reputable testing laboratory, regularly engaged in the testing of such equipment, indicating that the strength capacity of the device submitted for approval and all its components are not less than the manufacturer's indicated breakaway weight or ultimate strength.

C. The device submitted for approval shall meet the following requirements:

1. construction material to consist of steel or other alloy of equal or greater strength;

2. tinsel strength of the unit and all components shall be greater than 6,000 pounds or the gross vehicle weight rating of the vehicle being towed, whichever is greater;

3. the method by which the safety device is attached from the towing vehicle to the towed vehicle shall be independent and not attached to the primary towing device. It should attach to the vehicle's main frame and/or receiver if equipped with a tow package and/or the bumper if the bumper is rated of sufficient strength to meet or exceed the tow rating for the safety device. At no time should the safety device be attached to the trailer hitch ball or shank;

4. the safety device shall meet or exceed the strength standards set by the Society of Automotive Engineers (S.A.E.) for the manufacture, use and application of safety chains, as they relate to the towing of vehicles or trailers.

D. The manufacturer of the submitted device shall:

1. have a certified bond of insurance in the amount of not less than $1,000,000;

2. be a business in good standing, not delinquent on taxes or other fees;

3. assign a model designation to each variant or design and it shall be unique to the individual model. All changes or alterations to devices shall require a separate application being submitted by the manufacturer.

E. As a prerequisite to licensing, applicants shall submit the following to the department when seeking approval:

1. certificate of inspection from an insured and accredited scientific testing laboratory;

2. pictures and Schematics of the device;

3. certificate of insurance in the amount of not less than $1,000,000;

4. articles of incorporation or other documents forming a legal company or business;

5. tax identification numbers.

F. The commander of the Louisiana State Police Transportation and Environmental Safety Section, or his designee, shall have the authority and discretion to approve or deny any and all safety devices submitted for approval. The Louisiana State Police may, at its discretion, withdraw or repeal its approval, upon written notice, of any device that may later be determined unsafe or hazardous to the public or as a result of any actions by the manufacturer or its employees in violation of this Section. All costs of testing, certification and other related costs shall be borne by the manufacturer/applicant.

AUTHORITY NOTE: Promulgated in accordance with R.S. 32:384.

HISTORICAL NOTE: Promulgated by the Department of Public Safety and Corrections, Office of State Police, LR 27:424 (March 2001).

Chapter 25. Litter Enforcement

§2501. Approved Citation for Litter Enforcement

A. The department hereby approves any uniform citation approved and adopted for use pursuant to R.S. 32:398.1 for the enforcement of any litter violations committed in this state.

AUTHORITY NOTE: Promulgated in accordance with R.S. 30:2531.7.

HISTORICAL NOTE: Promulgated by the Department of Public Safety and Corrections, Office of State Police, LR 27:205 (February 2001).

Chapter 27. Collection, Submission, Receipt, Identification, Storage and Disposal of DNA Samples

Subchapter A. Collection of DNA Samples

§2701. Scope, Purpose and Application

A. Scope, Purpose, and Application. To provide rules and regulations governing the collection, submission, receipt, identification, storage and/or disposal of DNA samples for convicted offenders for a state database/CODIS pursuant to R.S. 15:601 et seq.

AUTHORITY NOTE: Promulgated in accordance with R.S. 15:611.

HISTORICAL NOTE: Promulgated by the Department of Public Safety and Corrections, Office of State Police, LR 27:205 (February 2001), repromulgated LR 27:1701 (October 2001).

§2702. Definitions

AFIS—the Automated Fingerprint Identification System operated by the Department of Public Safety and Corrections, Public Safety Services.

Biological Sample—biological evidence of any nature that is utilized to conduct DNA analysis.

CAJUN—the Corrections and Justice Unified Network operated by the Department of Public Safety and Corrections.

CODIS or *Combined DNA Index System*—the Federal Bureau of Investigation's national DNA identification index system which facilitates the storage and exchange of DNA records submitted by state and local criminal justice and law enforcement agencies.

Convicted Offender—a person convicted of a felony sex offense, other specified offense or any other offense for which a DNA sample must be obtained pursuant to R.S. 15:601 et seq.

Crime Laboratory—Louisiana State Police Crime Laboratory of the Department of Public Safety and Corrections, Public Safety Services.

DNA—deoxyribonucleic acid.

DNA Analysis—DNA typing tests that generate numerical identification information and are obtained from a DNA sample.

DNA Database—the DNA identification record system maintained and administered by the state CODIS administrator.

DNA Database Blood Collection Kit—the kit approved by the department for the collection of DNA blood samples.

DNA Database Buccal Collection Kit—the kit approved by the department for the collection of DNA buccal samples.

DNA Database Information Card (DDIC)—the information card which provides identifying information of the offender when a non-livescan collection is performed.

DNA Record—DNA information that is derived from a DNA sample and DNA analysis and is stored in the state DNA database or in CODIS, including all records pertaining to DNA analysis.

DNA Sample—biological evidence of any nature that is utilized to conduct DNA analysis.

DPSC—Department of Public Safety and Corrections.

Department—Department of Public Safety and Corrections, Public Safety Services.

Director—the Director of the Louisiana State Police Crime Laboratory.

FBI—Federal Bureau of Investigation within the United States Department of Justice.

FTA—specialized paper that binds DNA.

AUTHORITY NOTE: Promulgated in accordance with R.S. 15:611.

HISTORICAL NOTE: Promulgated by the Department of Public Safety and Corrections, Office of State Police, LR 27:205 (February 2001), repromulgated LR 27:1701 (October 2001), amended LR 37:1417 (May 2011), LR 44:97 (January 2018).

§2703. Collection, Submission, and Identification of DNA Samples for Convicted Offenders

A. All DNA samples obtained for DNA analysis from a convicted offender shall be collected using an approved Louisiana State Police Crime Laboratory DNA database collection kit. Procedures are specific to the type of sample being collected. A different kit is used for blood collection and buccal collection.

1. Each DNA database collection kit shall contain all necessary materials for collection and for proper identification of the offender.

2. Each kit shall be numbered sequentially from one kit to the next so that each number shall serve as a unique identifier. Kit components shall have the same number.

3. All DNA samples shall be collected by individuals trained and approved to serve as collectors by the Louisiana State Police Crime Laboratory.

4. The collector may utilize an AFIS printout (livescan generated), which contains the identifying information of the convicted offender when obtaining a sample.

5. In the event that a manual collection is completed (non-livescan process), the collector shall complete the DDIC which contains the identifying information of the collected offender when obtaining a sample. All information shall be provided. Printed name, date and signature of the person collecting the sample are required. A fingerprint is obtained as positive identification of the offender. Samples submitted with incomplete information may require recollection.

6. Biological samples shall be obtained according to the instructions contained in the kit.

7. The specimen envelope containing the biological sample and the DDIC or AFIS printout shall be placed in the mailing envelope provided. The mailing envelope flap shall be sealed.

8. If a blood collection kit is used, finger stick blood samples shall be obtained using recognized and approved medical procedures.

9. In the event a convicted offender resists the taking of the DNA sample and the collector may use reasonable force in accordance with R.S. 15:601-620, the collector may collect any type of biological sample approved by the Louisiana State Police crime laboratory. The following types of biological sample collections are hereby approved for these instances:

i. blood stain from finger prick on FTA card;

ii. buccal swab;

iii. phlebotomy draw.

AUTHORITY NOTE: Promulgated in accordance with R.S. 15:611.

HISTORICAL NOTE: Promulgated by the Department of Public Safety and Corrections, Office of State Police, LR 27:206 (February 2001), repromulgated LR 27:1702 (October 2001), amended LR 30:271 (February 2004), LR 37:1418 (May 2011), LR 44:97 (January 2018).

§2704. Shipping of DNA Samples for Convicted Offenders

A. DNA samples collected in accordance with these procedures shall be submitted to the crime laboratory in person by approved personnel or via delivery service, such as U.S. mail in accordance with the crime laboratory's policies and procedures. The mailing envelope shall be mailed or delivered to the crime laboratory after collection to the following address.

Louisiana State Police Crime Laboratory
376 East Airport Drive
Baton Rouge, LA 70806

AUTHORITY NOTE: Promulgated in accordance with R.S. 15:611.

HISTORICAL NOTE: Promulgated by the Department of Public Safety, Office of State Police, LR 27:207 (February 2001), repromulgated LR 27:1702 (October 2001), amended LR 37:1418 (May 2011).

§2705. Record Keeping of DNA Samples for Convicted Offenders

A. The individual who collects each DNA sample for a submitting agency shall complete a list of every DNA sample collected for each day of collection. Any failed attempts to collect blood from an offender and the reason for the failure (e.g., refusal of offender to submit, failure to keep scheduled appointment) shall also be indicated. The list will include the following information: the kit number, the offender's name, the name of the person collecting the sample and the submitting agency together with any additional data which the crime laboratory deems necessary. This information shall be retained for record within a designated area at the submitting agency location.

AUTHORITY NOTE: Promulgated in accordance with R.S. 15:611.

HISTORICAL NOTE: Promulgated by the Department of Public Safety and Corrections, Office of State Police, LR 27:207 (February 2001), repromulgated LR 27:1703 (October 2001), amended LR 30:271 (February 2004), LR 37:1419 (May 2011), LR 44:98 (January 2018).

§2706. Storage of DNA Samples for Convicted Offenders

A. The sealed kits containing DNA samples shall be stored in a dedicated storage area within the crime laboratory. Access to the sealed kits and to the storage area shall be limited to authorized personnel. Any access to or removal/return of the sealed kit or specimen bags shall be performed in accordance with crime lab policies and procedures. Only authorized personnel shall open a sealed kit or specimen bag.

B. DNA samples on FTA blood collection paper, DNA buccal samples, and DDIC cards shall be stored indefinitely in a secure storage area unless otherwise required in accordance with R.S. 15:614.

AUTHORITY NOTE: Promulgated in accordance with R.S. 15:611.

HISTORICAL NOTE: Promulgated by the Department of Public Safety and Corrections, Office of State Police, LR 27:207 (February 2001), repromulgated LR 27:1703 (October 2001), LR 37:1419 (May 2011).

§2707. Severability

A. If any article, Section, Subsection, sentence, Clause or phrase of LAC 55:I:2301 et seq., is for any reason determined to be unconstitutional, contrary to statute, in excess of authority, or otherwise inoperative, such determination shall not affect the validity of any other article, Section, Subsection, sentence, Clause or phrase of LAC 55:I:2301 et seq.

AUTHORITY NOTE: Promulgated in accordance with R.S. 15:611.

HISTORICAL NOTE: Promulgated by the Department of Public Safety and Corrections, Office of State Police, LR 27:207 (February 2001), repromulgated LR 27:1703 (October 2001).

Subchapter B. Arrestees

§2720. Scope, Purpose and Application

A. Scope, Purpose, and Application. To provide rules and regulations governing the collection, submission, receipt, identification, storage and/or disposal of DNA samples for arrestees for a state database/CODIS pursuant to R.S. 15:601 et seq.

AUTHORITY NOTE: Promulgated in accordance with R.S. 15:611.

HISTORICAL NOTE: Promulgated by the Department of Public Safety and Corrections, Office of State Police, LR 28:2369 (November 2002).

§2721. Definitions

AFIS—the Automated Fingerprint Identification System operated by the Department of Public Safety and Corrections, Public Safety Services.

Arrestee—a person arrested for a felony sex offense, other specified offense or any other offense for which a DNA sample must be obtained pursuant to R.S. 15:601 et seq.

Biological Sample—biological evidence of any nature that is utilized to conduct DNA analysis.

Crime Laboratory—Louisiana State Police Crime Laboratory of the Department of Public Safety and Corrections, Public Safety Services.

DNA—deoxyribonucleic acid.

DNA Analysis—DNA typing tests that generate numerical identification information and are obtained from a DNA sample.

DNA Arrestee Database Collection Kit or *Kit*—the kit provided by the department for the collection of DNA samples.

DNA Database—the DNA identification record system maintained and administered by the state CODIS administrator.

DNA Record—DNA information that is derived from a DNA sample and DNA analysis and is stored in the state DNA database or in CODIS, including all records pertaining to DNA analysis.

DPSC—Department of Public Safety and Corrections.

Department—Department of Public Safety and Corrections, Public Safety Services.

Director—the director of the Louisiana State Police Crime Laboratory.

FBI—Federal Bureau of Investigation within the United States Department of Justice.

AUTHORITY NOTE: Promulgated in accordance with R.S. 15:611.

HISTORICAL NOTE: Promulgated by the Department of Public Safety and Corrections, Office of State Police, LR 28:2369 (November 2002), amended LR 37:1419 (May 2011), LR 44:98 (January 2018).

§2722. Collection, Submission, and Identification of DNA Samples for Arrestees

A. All biological samples obtained for DNA analysis from an arrestee shall be collected using an approved Louisiana State Police Crime Laboratory DNA arrestee collection kit.

1. An arrestee collection kit shall contain materials for collection of a biological sample for use in DNA analysis.

2. Each kit shall be numbered sequentially from one kit to the next so that each kit number shall serve as a unique identifier. Kit components shall have the same number.

3. All biological samples shall be collected by individuals trained and approved to serve as collectors by the Louisiana State Police Crime Laboratory.

4. The collector shall utilize an AFIS Printout (livescan generated), which contains the identifying information of the arrestee when obtaining a sample.

a. In the event that a manual collection form is used, all information shall be provided. Printed name, date and signature of the person collecting the sample is required. A fingerprint is obtained as positive identification of the offender. Samples submitted with incomplete information may require recollection.

b. Buccal biological samples shall be obtained according to the instructions contained in the kit.

c. The transport pouch, containing the buccal collection device, and the AFIS printout shall be placed in the mailing envelope provided. The mailing envelope flap shall be sealed.

d. In the event an arrestee resists the taking of the DNA sample, the collector may use reasonable force in accordance with R.S. 15:601-620.

5. In the event that a manual collection form is used, all information shall be provided. Printed name, date and signature of the person collecting the sample is required. A fingerprint is obtained as positive identification of the offender. Samples submitted with incomplete information may require recollection.

6. Buccal biological samples shall be obtained according to the instructions contained in the kit.

7. The specimen envelope containing the biological sample and the AFIS printout shall be placed in the mailing envelope provided. The mailing envelope flap shall be sealed.

8. In the event an arrestee resists the taking of the DNA sample, the collector may use reasonable force in accordance with R.S. 15:601-620.

AUTHORITY NOTE: Promulgated in accordance with R.S. 15:611.

HISTORICAL NOTE: Promulgated by the Department of Public Safety and Corrections, Office of State Police, LR 28:2369 (November 2002), amended LR 37:1419 (May 2011), LR 44:98 (January 2018).

§2723. Security of Biological Samples at Booking Facility

A. All collectors and employees of the booking facility shall ensure that all biological samples taken from arrestees are kept in a secure place within the booking facility until the samples are shipped to the crime laboratory pursuant to these regulations. All collectors shall also ensure that pursuant to R.S. 15:617 and any Biological Sample Security Procedures established by the crime laboratory, that no unauthorized disclosures regarding any biological sample taken from any arrestee are permitted.

AUTHORITY NOTE: Promulgated in accordance with R.S. 15:611.

HISTORICAL NOTE: Promulgated by the Department of Public Safety, Office of State Police, LR 28:2370 (November 2002).

§2724. Shipping of DNA Samples for Arrestees

A. DNA samples collected in accordance with these procedures shall be submitted to the crime laboratory in person by approved personnel or via delivery service, such as U.S. Mail in accordance with the Crime Laboratory's policies and procedures. The mailing envelope shall be mailed or delivered to the crime laboratory after collection to the following address.

Louisiana State Police Crime Laboratory
376 East Airport Drive
Baton Rouge, LA 70806

AUTHORITY NOTE: Promulgated in accordance with R.S. 15:611.

HISTORICAL NOTE: Promulgated by the Department of Public Safety and Corrections, Office of State Police, LR 28:2370 (November 2002), amended LR 37:1419 (May 2011).

§2725. Record Keeping of DNA Samples for Arrestees

A. The individual who collects each DNA sample for a submitting agency shall complete a list of every DNA sample collected for each day of collection. Any failed attempts to collect a sample from an arrestee and the reason for the failure (e.g., refusal of arrestee to submit) shall also be indicated. The list will include the following information: the kit number, the arrestee's name, the name of the person collecting the sample and the submitting agency together with any additional data which the crime laboratory deems necessary. This information shall be retained for record within a designated area at the submitting agency location.

AUTHORITY NOTE: Promulgated in accordance with R.S. 15:611.

HISTORICAL NOTE: Promulgated by the Department of Public Safety, Office of State Police, LR 28:2370 (November 2002), amended LR 30:271 (February 2004), LR 37:1420 (May 2011), LR 44:98 (January 2018).

§2726. Storage of DNA Samples for Arrestees

A. The sealed kits containing DNA samples shall be stored in a dedicated storage area designated by the crime laboratory. Access to the sealed kits and to the storage area shall be limited to authorized personnel. Any access to or removal/return of the sealed kit shall be performed in accordance with crime lab policies and procedures. Only authorized personnel shall open a sealed specimen envelope, and if applicable shall initial and date the broken seal and shall reseal the specimen envelope in accordance with standard operating procedures.

B. DNA samples from arrestees and AFIS printouts shall be stored for the time period as prescribed by Louisiana law in a secure storage area unless otherwise required in accordance with R.S. 15:614.

AUTHORITY NOTE: Promulgated in accordance with R.S. 15:611.

HISTORICAL NOTE: Promulgated by the Department of Public Safety and Corrections, Office of State Police, LR 28:2370 (November 2002), amended LR 37:1420 (May 2011).

§2727. Severability

A. If any article, Section, Subsection, sentence, Clause or phrase of LAC 55:I.2720 et seq., is for any reason determined to be unconstitutional, contrary to statute, in excess of authority, or otherwise inoperative, such determination shall not affect the validity of any other article, Section, Subsection, sentence, Clause or phrase of LAC 55:I.2701 et seq.

AUTHORITY NOTE: Promulgated in accordance with R.S. 15:611.

HISTORICAL NOTE: Promulgated by the Department of Public Safety and Corrections, Office of State Police, LR 28:2370 (November 2002).

Subchapter C. Peace Officers

§2740. Scope, Purpose and Application

A. Scope, Purpose, and Application. To provide rules and regulations governing the collection, submission, receipt, identification, storage and/or disposal of DNA samples for peace officers pursuant to R.S. 40:2405.4.

AUTHORITY NOTE: Promulgated in accordance with R.S. 40:2405.4.

HISTORICAL NOTE: Promulgated by the Department of Public Safety, Office of State Police, LR 30:271 (February 2004).

§2741. Definitions

Biological Sample—biological evidence of any nature that is utilized to conduct DNA analysis.

Crime Laboratory—Louisiana State Police Crime Laboratory of the Department of Public Safety and Corrections, Public Safety Services.

Department—Department of Public Safety and Corrections, Public Safety Services.

Director—the Director of the Louisiana State Police Crime Laboratory.

DNA—deoxyribonucleic acid.

DNA Analysis—DNA typing tests that generate numerical identification information and are obtained from a DNA sample.

DPS and C—Department of Public Safety and Corrections.

Peace Officer—same meaning as R.S. 40:2402.

AUTHORITY NOTE: Promulgated in accordance with R.S. 40:2405.4.

HISTORICAL NOTE: Promulgated by the Department of Public Safety, Office of State Police, LR 30:271 (February 2004).

§2742. Collection of DNA Samples for Peace Officers

A. All biological samples obtained for DNA Analysis from a peace officer shall be buccal swabs and shall be collected using sterile cotton tip swabs as provided by the agency employing the peace officer who is required to have his biological sample collected pursuant to R.S. 40:2405.4.

1. The agency employing the peace officer shall provide all materials necessary to collect a biological sample from any peace officer required to provide a sample pursuant to R.S. 40:2405.4.

2. The supplies necessary to collect a buccal swab shall include the following:

a. one pack of two sterile cotton tip swabs;

b. one pair of gloves;

c. one paper type envelope to store the samples once collected;

d. evidence tape for sealing the paper envelope.

3. In order to collect the biological sample, the collector shall adhere to the following procedures.

a. The collector shall print the name of the peace officer, the date of collection and the name of the collector on the paper type envelope used to store the samples prior to collection of the specimen.

b. Have the subject open his or her mouth. If there is foreign matter in the mouth, such as tobacco or gum, have the subject rinse his or her mouth out with water.

c. Remove one sterile cotton swab and collect the specimen by rubbing the swab vigorously on the inside surfaces of the cheeks and gums thoroughly. While slowly turning the swab (so that all sides of the swab are in contact with the side of the cheek) rub the swab up and down and back and forth in the mouth about 10 times.

d. Place the buccal swab in the paper type envelope. Do not place the swab back into the original sterile swab packaging.

e. Repeat Subparagraph c of this Paragraph with the remaining swab.

f. Place the second cotton tip swab immediately inside the paper type envelope with the first swab.

g. Seal the paper type envelope. Write the date and collector's initials partially on the paper type envelope and partially on the envelope flap.

AUTHORITY NOTE: Promulgated in accordance with R.S. 40:2405.4.

HISTORICAL NOTE: Promulgated by the Department of Public Safety, Office of State Police, LR 30:271 (February 2004), amended LR 37:1420 (May 2011).

§2743. Storage of Biological Samples

A. All agencies employing any peace officer required to provide a biological sample pursuant to R.S. 40:2405.4 shall be responsible for storing said samples in a secure location. All agencies shall ensure that no unauthorized access to any biological sample taken from any peace officer is permitted.

AUTHORITY NOTE: Promulgated in accordance with R.S. 40:2405.4.

HISTORICAL NOTE: Promulgated by the Department of Public Safety, Office of State Police, LR 30:272 (February 2004).

§2745. Disposition of Biological Samples Following Termination Peace Officer Employment

A. If the employment of a peace officer who is required to have a DNA sample collected pursuant to R.S. 40:2405.4 terminates for any reason, the law enforcement agency that collected the sample may destroy the buccal swab or return it to the peace officer from whom the sample was collected.

AUTHORITY NOTE: Promulgated in accordance with R.S. 40:2405.4.

HISTORICAL NOTE: Promulgated by the Department of Public Safety, Office of State Police, LR 30:272 (February 2004).

§2747. Severability

A. If any article, Section, Subsection, sentence, Clause or phrase of LAC 55:I:2720 et seq., is for any reason determined to be unconstitutional, contrary to statute, in excess of authority, or otherwise inoperative, such determination shall not affect the validity of any other article, Section, Subsection, sentence, Clause or phrase of LAC 55:I:2701 et seq.

AUTHORITY NOTE: Promulgated in accordance with R.S. 40:2405.4.

HISTORICAL NOTE: Promulgated by the Department of Public Safety, Office of State Police, LR 30:272 (February 2004).

Chapter 29. Defensive Driving Course Approval and Certification

§2901. Defensive Driving Course Approval Process

A. Authority

1. Act 169 of the 2001 Regular Legislative Session amended R.S. 22:1404, authorizing the Department of Public Safety and Corrections, Public Safety Services, Office of State Police to approve and certify defensive driving courses.

2. Act 1093 of the 2003 Regular Legislative Session amended R.S. 22:1404, authorizing the Department of Public Safety and Corrections, Public Safety Services, Office of State Police (department) to promulgate rules and regulations to establish criteria and standards for the approval and certification of defensive driving courses. The expenses of the approval and certification process by the department shall be funded through an interagency agreement with the Department of Insurance, contingent upon the appropriation of funds by the legislature.

3. These rules shall apply to any person, business, or entity producing defensive driving courses and seeking department approval and certification of their defensive driving course.

4. The department shall not incur an unfunded mandate and if funds are not available, the department shall not be required to certify defensive driving courses.

5. These rules are promulgated in accordance with R.S. 22:1404.

B. Defensive Driving Course Objectives

1. How to identify and avoid unsafe driving conditions and behaviors that may cause a licensed driver to be involved in or cause a traffic crash which may result in the loss of life, bodily injury, or damage to property.

2. Educate drivers on proper defensive driving techniques and identifying and avoiding traffic hazards that may lead to vehicle crashes.

3. How to identify aggressive driver behavior patterns along with alternatives to avoid confrontations and stressful driving situations.

C. Defensive Driving Course; Application, Curriculum and Certification

1. A business, individual, or Louisiana state agency applying for department certification of a defensive driving course must make application and submit all course materials to the department to obtain approval and certification. Any certification fraudulently obtained or issued shall be revoked by the department.

2. A business, individual, or agency seeking approval of their course must be domiciled within Louisiana and

submit the following information and documents to the department prior to consideration:

a. notarized application. The application shall be a completed affidavit including, but not limited to, the following:

i. the business name, address and phone number of the company or entity producing the course. The business trade name must be registered with the Louisiana Secretary of State;

ii. name of the owner(s), or if a corporation, names of all corporate officers and registered agent(s) for service of process;

iii. actual name of the defensive driving course to be considered for approval;

iv. a statement substantially as follows:

"Under oath, I affirm and attest, under penalty of law, that the information submitted in this application is true and accurate and I agree to abide by all applicable laws, rules and regulations governing the license, certification and business operations for which this application is made and that I am the responsible party having authority to enter into binding obligations on behalf of this company or the above named entity";

v. date of application; and

vi. notarized signature(s) of the applicant or authorized company officers;

b. specific and complete course guide and curriculum;

c. a description of the testing process and procedures, including a copy of the final examination;

d. electronic or computer based courses must be submitted to the department for viewing on a compact disc or similar electronic format;

e. uniform certificate of completion shall be legible and on a form of certification determined and approved by the Louisiana Insurance Rating Commission; and

f. any additional information required by the department.

3. In addition to basic curriculum, the following topics of instruction shall be included in the defensive driving course curriculum:

a. sharing the road with:

i. tractor trailer trucks, motor coaches and other commercial motor vehicles;

ii. motorcycles;

iii. school buses;

iv. emergency vehicles, including yielding to stopped emergency vehicles and yielding to emergency vehicles in pursuit or responding to calls;

b. training on railroad and highway grade crossing safety;

c. operating vehicles in inclement weather and at night;

d. sleep deprivation;

e. aggressive driving;

f. vehicle safety features, i.e., seat belts, air bags, anti-lock brakes;

g. how alcohol and drugs effect driving ability; and

h. Louisiana's traffic laws, especially those violations that are leading causes of traffic crashes, such as: careless operation, failure to yield, following too closely and disregarding traffic controls.

4. The course shall be divided into five specific parts to facilitate the learning process. A student must participate in each part. The defensive driving course shall be divided into the following parts:

a. sharing the road with other vehicles:

i. tractor trailer trucks, motor coaches and other commercial motor vehicles;

ii. motorcycles;

iii. school buses;

iv. emergency vehicles, including yielding to stopped emergency vehicles and yielding to emergency vehicles in pursuit or responding to calls;

b. traffic laws:

i. Louisiana's traffic safety laws, specifically, but not limited to, those violations that are leading causes of traffic crashes, namely:

(a). careless operation;

(b). failure to yield;

(c). following too closely; and

(d). disregarding traffic controls;

ii. training on railroad and highway grade crossing safety;

c. dangers of impaired drivers;

i. how alcohol and drugs affect driving ability;

ii. sleep deprivation;

d. aggressive driving and exceeding safe speed limits; and

e. vehicle safety features and road hazards:

i. seat belts, air bags, anti-lock brakes;

ii. operating vehicles in inclement weather and at night.

5. The duration of the course shall be at least four hours of instruction and testing in a traditional classroom setting, or as an alternative, a minimum of 60 minutes of instruction in a computer-based, electronic medium designed

to allow students to progress and test at his/her own pace, which may include written instructions, narratives supplemented with video clips, etc.

6. Written evidence of successful completion of the defensive driving course by a student shall be part of the course curriculum and be provided by the course administrators or instructors to the student on a form approved by the Insurance Rating Commission.

7. All students shall have adequate access to course instructors, and if computer based courses, to technical support personnel throughout the duration of the training. In no event shall a student have to wait longer than five minutes for personal interaction by an instructor or if computer based, a way to contact technical support personnel.

8. Course providers shall be able to provide documentation proving all requirements have been met.

9. Submitted applications and supporting documents shall be reviewed for accuracy and content by the department to determine if the defensive driving course meets all the requirements listed within these rules. Once a determination is made by the department the company shall be notified in writing of the decision to certify or reject the defensive driving course.

10. A company or entity shall be required to reapply for certification if there is a change in the defensive driving course curriculum.

11. Any certification fraudulently obtained or issued shall be revoked by the department.

D. Defensive Driving Testing and Student Identity Certification

1. The final examination shall be a minimum of 25 questions, selected randomly from a question pool of no less than 125 questions, based on actual course material, and composed to test the student's knowledge of the course's content and what the student has learned.

2. The final examination shall be administered at the conclusion of the course and be divided into the course's five parts. A student must successfully complete the exam by scoring at least 80 percent on the examination. A student not achieving the minimum 80 percent on the final examination shall be advised of the correct answer and required to review the deficient part(s) and retest on the deficient parts subject matter with different randomly selected questions.

3. The course content shall advise students of the prohibition on cheating, advise them that they will not be allowed to continue the course if they are found cheating and action may be taken against them by the Department of Insurance or the Insurance Rating Commission.

4. Each student enrolled in a defensive driving course shall be required to present his driver's license as proof of identity or if computer based, enter their driver's license number in to the computer, which shall be printed on the certificate of completion.

5. Course providers shall develop and deploy a means to authenticate the identity of a student throughout the duration of the course, with added emphasis during the final examination.

E. Defensive Driving Course; Prohibitions

1. Companies shall not reference "Department of Public Safety and Corrections" or "Louisiana State Police" in any advertisements or imply that the defensive driving course is recommended, supervised or endorsed by the department or the state of Louisiana.

2. Course providers are prohibited from issuing a certificate of completion to any person who has not enrolled in its defensive driving course and met all of the requirements for course completion.

3. Course providers shall adhere to all federal and state laws and shall not engage in any form of unlawful discrimination or other illegal activities.

4. This defensive driving course shall not be utilized in lieu of the requirements of the "driver education course" or the "pre-licensing training course" (6 or 36 hour commercial driving schools) authorized in R.S. 32:402.1.

5. This defensive driving course shall not be utilized in lieu of the requirements of the "driver improvement program for remediation" authorized in R.S. 32:402.2.

6. No company operating a defensive driving course, its agents, responsible parties, or other persons shall release or provide relevant data, answers to examinations, or otherwise compromise the integrity of a defensive driving course.

7. No company, employees, instructors, or agents shall violate the Federal Driver's Privacy Protection Act of 1994, R.S. 32:401 et seq., or any other privacy or security laws or regulations.

F. Administrative Penalties for Noncompliance

1. Any person, business, or entity failing to comply with any provision of these rules shall be subject to an administrative civil penalty. Each day's failure to comply with these administrative rules shall constitute a separate offense. The penalties may include a warning, monetary fine, suspension of the department's certification of the defensive driving course or a combination of these penalties.

2. In accordance with these rules and regulations adopted pursuant to the Administrative Procedure Act, an administrative penalty may be assessed by the Department of Public Safety and Corrections and shall be payable to the Louisiana Towing and Storage Fund.

3. If the department determines to revoke a course's certification, the company or individual shall be notified in writing of the intent to revoke its certification in 30 days. The company or individual shall have 30 days from the date of the written notice of intent to show cause as to why the department should not revoke its certification. If a company fails to respond within the 30 days, the revocation shall be

final. The department shall notify the Department of Insurance of the effective date of such revocation.

AUTHORITY NOTE: Promulgated in accordance with R.S. 22:1404.

HISTORICAL NOTE: Promulgated by the Department of Public Safety and Corrections, Public Safety Services, Office of State Police, LR 31:2953 (November 2005).

Chapter 31. Motorcycle Safety Training Program

§3101. Purpose

A. The purpose of this manual is to provide for the promulgation of regulations and procedures for the department's Motorcycle Safety, Awareness and Operator Training Program. This manual is designed for use by program motorcycle safety instructors to facilitate the implementation of department motorcycle operator training courses or other program activities. It shall be incumbent upon all program personnel to be knowledgeable of and to abide by all of the current program regulations and procedures. The regulations and procedures contained herein supersede those in effect prior to the printing of the 2009 edition.

B. This manual is subject to revision; it is the responsibility of all program personnel to be abreast of the latest revisions through required attendance at all department scheduled motorcycle safety instructor update workshops and through the complete reading of the current manual.

C. The purpose of the program shall be to:

1. educate motorcycle operators in the safe operation of motorcycles;

2. provide for the certification of motorcycle operator education and training instructors and the training of law enforcement personnel in the proper operation of motorcycles;

3. develop campaigns to promote participation in the program, motorcycle safety, and motorcycle awareness.

AUTHORITY NOTE: Promulgated in accordance with R.S.32:402.3.

HISTORICAL NOTE: Promulgated by the Department of Public Safety and Corrections, Office of State Police, LR 36:537 (March 2010).

§3103. Background

A. Efforts to promote motorized two-wheel vehicle safety in Louisiana began in the mid 1950's with the development and statewide implementation of a Motor Scooter Operator Training Course. In 1974, the Department of Education established and implemented a motorcycle safety and rider education program to address the high incidence of in-state motorcycle related traffic accidents. In 1987 through legislative action, the program title was changed to Motorcycle Safety, Awareness and Operator Training Program. Today the program is administered and implemented through the Department of Public Safety and Corrections, Office of State Police Transportation and Environmental Safety Section.

AUTHORITY NOTE: Promulgated in accordance with R.S.32:402.3.

HISTORICAL NOTE: Promulgated by the Department of Public Safety and Corrections, Office of State Police, LR 36:537 (March 2010).

§3105. Legal Authority

A. Act 138 of the 2009 Regular Legislative Session authorized the transfer of the Motorcycle Safety, Awareness and Operator Training Program to the Department of Public Safety and Corrections, effective September 1, 2009.

AUTHORITY NOTE: Promulgated in accordance with R.S.32:402.3.

HISTORICAL NOTE: Promulgated by the Department of Public Safety and Corrections, Office of State Police, LR 36:537 (March 2010).

§3107. Definition of Program Terms

Advanced Motorcycle Operator Training Course—a course designed for the enhanced motorcycle operation training of individuals who are licensed to operate such vehicles.

Aide—a volunteer, no less than the age of 16 who has been given written permission by the program coordinator to perform certain tasks associated with the conduct of a course.

Basic Motorcycle Operator Training Course—an entry-level course designed for the training of individuals in motorcycle operation.

Certification—motorcycle safety instructor certification.

Course—a DPSC approved motorcycle operator training course.

Course Site—location where the course classroom sessions begin.

Curriculum Guide—a DPSC approved Motorcycle Operator Training Course Instructor Guide.

Department—Louisiana Department of Public Safety and Corrections (DPSC).

Department Motorcycle—a motorcycle owned by the department.

Fiscal Year—the 12-month period of July 1 to June 30.

Fund—Motorcycle Safety, Awareness and Operator Training Program Fund.

Instructor—motorcycle safety instructor.

Loan-Trainer Motorcycle—a motorcycle officially on loan through a written agreement to the department for the purpose of motorcycle operator training.

Manual—Motorcycle Safety, Awareness and Operator Training Program Regulations and Procedures Manual.

Mobile Training Unit—a department trailer or vehicle designed and used either for transporting program equipment owned or on loan to the department.

Motorcycle—every motor vehicle having a seat or saddle for the use of the rider and designed to travel on not more than three wheels in contact with the ground, but excluding a tractor.

Motorcycle Operator Training Course—any department approved course of instruction in motorcycle operation that meets the appropriate minimum standards established under these regulations.

Motorcycle Safety Assistant Instructor—a motorcycle safety instructor who serves as an assistant to a motorcycle safety lead instructor in the implementation of a particular motorcycle operator training course.

Motorcycle Safety Instructor—an individual meeting the prerequisites herein and employed by the department to provide instructional services in motorcycle operator training courses.

Motorcycle Safety Instructor Candidate—an individual who is in the department-approved process of fulfilling requirements as per LAC 55:I.3109.A to achieve the status of motorcycle safety instructor.

Motorcycle Safety Instructor Preparation Course—a department recognized course that meets the related standards herein and that is designed for the certification of an individual in motorcycle operator training and education.

Motorcycle Safety Lead Instructor—a motorcycle safety instructor that has applied to the program coordinator for approval to conduct certain motorcycle operator training course(s) as per these rules and regulations and who upon receipt of such approval serves as the top level instructor and/or administrator for those courses.

Motorcycle Safety Master Instructor—an individual that meets the related prerequisites established under these regulations and who may assume certain administrative and teaching duties in lieu of the program coordinator only at activities specified in writing by same.

Operator Student—an individual enrolled in a course and who has been approved by the instructor to operate a trainer motorcycle during the conduct of that course.

Participation Fee—a fee of $25 that shall be assessed to a motorcycle operator training course enrollee with the exception of a commissioned law enforcement officer employed as such within the state.

Passenger—an individual enrolled and participating in an advanced course as the non-operator of a motorcycle during any of the course range exercises; this person shall ride upon a trainer motorcycle during the course driving range exercises as a passenger only.

Practical Instruction—hands-on motorcycle operation instruction administered only in an off-road driving range environment.

Program—Louisiana Department of Public Safety and Corrections Motorcycle Safety, Awareness and Operator Training Program.

Program Coordinator—the department employee appointed to develop, administer, implement, and supervise the Motorcycle Safety, Awareness and Operator Training Program.

Range—motorcycle operator training course driving range.

State—Louisiana.

Student—any participant, excluding instructor(s), or aide(s) in a motorcycle operator training course that has paid or is exempt by law.

Supplemental Hours—approved additional hours allowed for services performed for program equipment maintenance, course preparation and student enrollment and related activities.

Trainer Motorcycle—any motorcycle used in a motorcycle operator-training course.

Training Site—any department-approved location where course classroom and/or driving range sessions are conducted for the purpose of motorcycle operator training.

AUTHORITY NOTE: Promulgated in accordance with R.S.32:402.3.

HISTORICAL NOTE: Promulgated by the Department of Public Safety and Corrections, Office of State Police, LR 36:537 (March 2010).

§3109. Motorcycle Safety Instructor Status

A. Motorcycle Safety Instructor Status Prerequisites. The prospective instructor shall:

1. be at least 21 years of age;

2. have earned a high school certificate of graduation or department recognized equivalent;

3. have a valid vehicle Louisiana driver's license with a cycle endorsement thereon;

4. have not been convicted of a felony, nor have pleaded "no contest" to the same in the immediate three-year period prior to application for instructor status;

5. have a satisfactory driving record for three consecutive years immediately prior to application for instructor status. Such record requires that the candidate to not have been convicted of more than three moving violations or not having had his or her vehicle operator's license suspended or revoked during this period;

6. be in good physical condition and have the ability to perform all of the required duties of a motorcycle safety instructor;

7. have satisfactorily completed a Motorcycle Safety Instructor Preparation Course approved by the program coordinator;

8. be the owner and/or frequent operator of a motorcycle currently licensed, insured, and state safety-inspected;

9. have passed all required program examinations.

B. Motorcycle safety master instructor status prerequisites:

1. be at least 21 years of age;

2. have six or more consecutive years of experience as a Motorcycle Safety Instructor and have satisfactorily taught, as a lead instructor, more than 36 department Basic Motorcycle Operator Training Courses during a period of at least six years immediately prior to application for such status;

3. have met all prerequisites contained in this Chapter;

4. have satisfactorily completed any additional training required by the program coordinator for the attainment of such status.

AUTHORITY NOTE: Promulgated in accordance with R.S.32:402.3.

HISTORICAL NOTE: Promulgated by the Department of Public Safety and Corrections, Office of State Police, LR 36:538 (March 2010).

§3111. Application for Department Motorcycle Safety Instructor Status

A. Application Procedure

1. No applicant for motorcycle safety instructor status shall be considered for such by the department until all of the requirements established in this Chapter are met by the applicant.

2. In addition to all other requirements established in this Chapter, an applicant must:

a. instruct at least four hours of classroom sessions and four hours of range sessions of a specific basic motorcycle operator training course under the direct supervision of a motorcycle safety master instructor and at a teaching proficiency level acceptable to the master instructor and program coordinator, prior to the application for employment as a motorcycle safety instructor. The date and time shall be assigned by the program coordinator. The potential motorcycle safety instructor must apply via correspondence to the program coordinator for approval to perform these instructional duties. Such duties shall be performed only after the applicant has received written approval from the program coordinator;

b. submit evidence of satisfactory completion of an approved motorcycle safety instructor preparation course;

c. complete and submit all required pre-employment forms;

d. pass all department required motorcycle safety instructor applicant examinations and interviews.

AUTHORITY NOTE: Promulgated in accordance with R.S.32:402.3.

HISTORICAL NOTE: Promulgated by the Department of Public Safety and Corrections, Office of State Police, LR 36:538 (March 2010).

§3113. Recognition and Maintenance of Motorcycle Safety Instructor Status

A. Recognition. If an applicant has met all of the requirements established by this Chapter, the department may employ the applicant as a motorcycle safety instructor.

B. Maintenance. To retain such status, a motorcycle safety instructor shall:

1. maintain a satisfactory driving record;

2. successfully complete all required workshops and meetings related to the program;

3. maintain a teaching proficiency acceptable by the program coordinator;

4. complete and submit all program surveys and other forms as required;

5. comply with all of the appropriate rules, regulations, procedures, and guidelines prescribed by the department for the program; and

6. maintain certificates as required.

AUTHORITY NOTE: Promulgated in accordance with R.S.32:402.3.

HISTORICAL NOTE: Promulgated by the Department of Public Safety and Corrections, Office of State Police, LR 36:539 (March 2010).

§3115. Revocation of Motorcycle Safety Instructor Status

A. Reasons for Revocation. The status of an instructor may be revoked for any one of the following:

1. suspension or revocation of Louisiana driver's license;

2. failure to comply with all program regulations, procedures, and guidelines;

3. acting in a manner that in the program coordinator's view is detrimental to the program, the safety of the instructor or the safety of any student participating in program activities;

4. falsification of any department/program applications, forms, records, instructional hours, vouchers, and surveys;

5. conviction of a felony or DUI;

6. theft, attempted theft or misuse of program funds, equipment, materials or supplies;

7. failure to successfully complete training activities as required by the department;

8. failure to report and submit (within five working days) to the program coordinator any funds obtained through the sale of program materials, supplies, equipment, or promotional items.

B. Revocation Procedure. An instructor not in compliance with program regulations and procedures as stated herein may be notified by the program coordinator or the department's personnel office via correspondence that his/her contract will be terminated for such deficiencies.

C. Consequences of Revocation

1. An individual whose motorcycle safety instructor status has been revoked by the department shall not be:

a. eligible to participate in the conduct of department motorcycle operator training courses;

b. associated with the operation of a department motorcycle operator training course or course site;

c. granted motorcycle safety instructor status for a minimum of two years from the date of revocation; he or she shall be required to complete again all of the requirements prescribed by the department for motorcycle safety instructor status;

d. allowed to retain any program funds, supplies, materials or equipment. Such funds or items in the instructor s possession shall be returned to the program coordinator within two weeks of status revocation. Failure to return such funds, supplies, materials or equipment as prescribed may result in legal action and/or prosecution by the appropriate state and/or local authorities.

AUTHORITY NOTE: Promulgated in accordance with R.S.32:402.3.

HISTORICAL NOTE: Promulgated by the Department of Public Safety and Corrections, Office of State Police, LR 36:539 (March 2010).

§3117. Motorcycle Operator Training Course Standards

A. Motorcycle Safety Instructor Preparation Course Standards

1. The motorcycle safety instructor preparation course shall contain a minimum of 50 hours of department-recognized instruction of which a minimum of 20 hours shall be practical motorcycle operation and teaching experiences.

2. The motorcycle safety instructor preparation course shall be conducted by a motorcycle safety master instructor or other department approved instructor.

B. Supervision and Inspection

1. All program personnel, activities and training sites are subject to supervision or inspection by the program manager, program coordinator or a designated master motorcycle safety instructor. Previously approved personnel, activities or training sites found to be in non-compliance with department regulations upon inspection or supervision may be removed, canceled or shut down at the time of inspection. As needed, a canceled activity may be completed by the inspector or designated program personnel.

C. Basic Motorcycle Operator Training Course

1. The basic course shall contain a minimum of 5 hours of classroom instruction and 10 hours of practical instruction per student. The state rules of the road and the state laws relating to motorcycles and their operation shall be included in the course curriculum.

2. The basic course shall include department approved written and practical student examinations, the grades of which shall not be revealed to students until after all course instruction has been administered.

3. Only a student with difficulty in reading may be given an oral examination in lieu of the requisite written examination. The oral examination shall be administered by a course instructor and read verbatim by that instructor to the student. The student shall supply the answers without assistance from the instructor.

D. Advanced Motorcycle Operator Training Course Standards

1. The advanced course shall contain a minimum 5 hours of discussion and practical instruction per student. The advanced course shall include department practical student examinations. Individuals may enroll in this particular type course with a passenger.

AUTHORITY NOTE: Promulgated in accordance with R.S.32:402.3.

HISTORICAL NOTE: Promulgated by the Department of Public Safety and Corrections, Office of State Police, LR 36:539 (March 2010).

§3119. Approval to Establish and Conduct a Department Motorcycle Operator Training Course

A. Application for Course Approval

1. A motorcycle safety instructor shall apply for written approval to establish and conduct any proposed program motorcycle operator training course or activity. It shall be the responsibility of the motorcycle safety instructor to initiate and fulfill the provisions of instructional services as required by this Chapter. Motorcycle safety instructors shall complete and submit to the program coordinator an Application for Approval to Conduct Motorcycle Operator Training Course(s) (MS1) on a copy of the original form provided herein no less than 20 working days prior to the earliest proposed course listed on the completed application. The individual submitting the application shall be named the lead motorcycle safety Instructor for all courses listed and approved.

2. No motorcycle safety instructor shall either solicit nor collect fees for or conduct any proposed program motorcycle operator training course or activity until written approval to do so is received by that instructor from the program coordinator. Such written approval, if granted, shall be provided to the instructor on a copy of the completed MS1 Form submitted by the instructor. Fees collected for unapproved courses shall be returned immediately to the individual(s) submitting them.

AUTHORITY NOTE: Promulgated in accordance with R.S.32:402.3.

HISTORICAL NOTE: Promulgated by the Department of Public Safety and Corrections, Office of State Police, LR 36:540 (March 2010).

§3121. Motorcycle Operator Training Course Enrollment and Participation Policies

A. Minimum Age and Physical Requirements

1. Participation in the program shall be open to any person who meets the qualifications of the Department of Public Safety and Corrections to apply for a motorcycle operator endorsement.

2. An individual no less than 16 years of age may enroll and participate in a course if this person provides the course instructor with documentation of having completed a Department of Education or Department of Public Safety and Corrections approved driver education course. Such documentation shall be in the form of the individual's school transcript or a Department of Education Driver Education Course Application and School Instruction Permit (DE 1821) or a commercial school instruction permit.

3. Individuals unable to provide such documentation shall be a minimum of 17 years of age to enroll or participate in any department motorcycle operator-training course.

B. Parental Consent to Enroll

1. No individual under 18 years of age shall be permitted to participate in any program motorcycle operator-training course without having previously had a parent or legal guardian read and sign the Student Registration and Release Form (MS3) in the presence of the course instructor. If the prospective course participant is under 18 years of age and his/her parent or guardian cannot read and sign the form (MS3) in the presence of the course instructor, the form (MS3) must be signed by the parent or guardian, notarized and given to the instructor before that prospective student can participate in any program motorcycle operator training course. The course instructor must also sign this form to verify that the form has been completed correctly.

C. License Requirements

1. Any individual not properly licensed to operate a motorcycle shall not be granted permission to enroll or participate in an Advanced Motorcycle Operator Training Course. Such licensure is not required for participation in a basic course unless the student is providing a motorcycle for use in the course.

D. Use of Participant Owned Motorcycle

1. A student providing a motorcycle for use in any course must use a personally owned motorcycle or a motorcycle borrowed from an immediate family member. The student and/or the motorcycle used must meet the following criteria:

a. licensed according to state law;

b. insured according to state law;

c. in compliance with all appropriate state rules and regulations concerning motorcycles and their operation;

d. have an engine displacement not to exceed 550cc if used in a basic motorcycle operator training course.

2. Course participants shall provide to the course instructor all appropriate and necessary documents to verify the aforementioned requirements. The course instructor shall request, inspect, and verify such documentation.

E. Mandatory Student Registration and Release Form Completion

1. No individual may participate either as a student or as an aide in any department motorcycle operator-training course without first having a program Student Registration and Release Form (MS3) completed and signed by that individual or his or her guardian as per manual instructions.

F. Public Enrollment and Participation

1. All program courses shall be open for enrollment and participation by any member of the public that qualifies under the rules and regulations of this manual.

G. Course Participation Fee

1. A participation fee of $25 shall be charged to a course operator student. An individual enrolling and participating as a passenger in an advanced course shall also pay a participation fee of $25. An individual employed full time by a state or an in-state local law enforcement agency shall be exempt from paying the participation fee.

2. All course related fees must be made in the form of a money order or bank certified check only.

H. Course Material and Motorcycle Reservation Fee

1. A motorcycle reservation fee of $75 shall be charged to any basic course student who does not wish to supply a trainer motorcycle, meeting the requirements as set forth in this Chapter. A course material fee of $125 shall be charged to individuals enrolled in a motorcycle safety instructor preparation course.

I. Collection and Management of Program Course Fees

1. Student money orders and/or bank certified checks shall be made payable to the Department of Public Safety and Corrections.

2. Cash and personal checks are not to be collected as program fees.

3. No course participation fee or motorcycle reservation fee shall be collected for a course not approved in writing by the program coordinator.

4. Student participation fees shall only be collected at the beginning of a particular course in which a student has preregistered and such fees shall be keep in a safe and secure location by the instructor.

J. Attendance Requirements

1. No student shall be allowed to successfully complete a motorcycle operator training course without having attended all of the classroom and practical session as prescribed by the approved curriculum.

2. No student shall be allowed to operate a training motorcycle in the practical sessions without having first

completed the requisite classroom session(s) as prescribed by the approved curriculum.

AUTHORITY NOTE: Promulgated in accordance with R.S.32:402.3.

HISTORICAL NOTE: Promulgated by the Department of Public Safety and Corrections, Office of State Police, LR 36:540 (March 2010).

§3123. Wage Policy

A. Qualifications for Payment of Assistant Instructor

1. Assistant instructors shall be paid for range instruction when there are 9 to 12 operator students participating in exercises on the same range where that assistant instructor has been assigned. An assistant instructor utilized in an advanced course where more than three passenger participants successfully complete that particular course may claim up to one additional hour of instructional service.

2. Assistant instructors may also be paid for classroom instruction if so assigned by the lead instructor within the total course instructional hours allowed.

B. Motorcycle Safety Instructor Candidate Services

1. A motorcycle safety instructor candidate shall not qualify to be paid wages for any services performed while qualifying for or attempting to obtain motorcycle safety instructor status.

C. Maximum Instructional Hours Allowed Per Course

1. Motorcycle safety instructor wages shall be calculated on an hourly basis. Wages shall be paid only for instruction and supplemental hours provided for courses or activities pre-approved in writing by the program coordinator. Additional hours may be claimed due to justifiable extenuating circumstances as reported to and approved by the program coordinator due to student emergency or extreme weather delays during the conduct of the course.

2. Instructor wages are paid for services rendered in the implementation of the following three types of motorcycle operator training courses:

a. basic motorcycle operator training course;

b. advanced motorcycle operator training course;

c. instructor preparation course.

i. Table 1 lists the maximum number of hours that may be claimed by the instructor(s) respective to the number of operator students participating in a particular basic motorcycle operator training course. In addition to the instructional hours allowed per course, the course lead motorcycle safety instructor may claim three to four supplemental hours per basic course for services performed for training site preparation and student registration supplies as per the following table.

Table 1. Basic Motorcycle Operator Training Course

Students on Range	Classroom: Total Hours	Range: Instructor Hours	Supplemental Hours	Assistant Instructor Hours
6-8	5.5	10	3	N/A
9-12 (w/AI)	5.5	10	3	10
12-16 (w/o AI)	5.5	20	4	N/A
17-24 (w/AI)	5.5	20	4	20

ii. Table 2 lists the maximum number of hours that may be claimed by the instructor(s) respective to the number operator students participating in a particular advanced motorcycle operator training course. A lead instructor and assistant instructor may each claim one additional hour of instruction service for an advanced course in which more than three passenger participants successfully complete that particular course. In addition to the instructional hours allowed per course, the course lead motorcycle safety instructor may claim 2.5 to 3 supplemental hours per basic course for services performed for training site preparation and student registration supplies as per the following table.

Table 2. Advanced Motorcycle Operator Training Course

Students on Range	Classroom: Total Hours	Range: Instructor Hours	Supplemental Hours	Assistant Instructor Hours
6-8	NA	5	2.5	N/A
9-12 (w/AI)	NA	5	2.5	5
12-16 (w/o AI)	NA	10	3	N/A
18-24 (w/AI)	NA	10	3	10

D. Minimum Students Needed to Claim Wages. Unless the course lead instructor is given a written exemption by the program coordinator, there shall be a minimum of six students participating during the first 90 minutes of classroom sessions in order for a lead instructor to claim wages for instructional and supplemental hours rendered in any particular course.

E. Submission of Completed Course Forms

1. Instructional personnel shall submit the following completed forms related to a particular course in original versions no more than four working days after the completion of the course:

a. Student Information and Performance List (Form MS2);

b. Student Registration and Release (Form MS3);

c. Instructor Performance Report (Form MS4);

d. Unsatisfactory Performance and Evaluation Report (Form MS5) (if applicable);

e. Accident/Injury Report(s) (MS6) (if applicable).

2. Completed program reports and forms should be delivered or submitted via certified mail to the following address: Department of Public Safety and Corrections, Transportation and Environmental Safety Section, 7919 Independence Blvd., Box 832, Baton Rouge, LA, 70806, telephone (225) 925-6113.

F. Submission of Course Fees

1. Only lead motorcycle safety instructors shall collect course fees. All collected course fees shall be submitted to the program coordinator with any applicable course forms subsequent to the completion of the course or other approved departmental activity.

G. Payroll Member: A Requirement to Instruct

1. An individual not on the department payroll shall not instruct or assist in the conduct of any program course or activity unless written authorization is provided to the lead instructor for the proposed course or activity by the program coordinator for the non-employee to perform such services.

H. Restriction: Range Sections Per Course

1. No motorcycle operator training course may contain more than two range sections to accommodate participating students when more than one instructor is utilized to conduct all or any part of that course.

I. Reporting of Instructional Hours

1. A motorcycle safety instructor claiming wages shall orally report or electronically mail (email) to the appointed time and attendance staff member within the number of hours performed per date by that instructor during a particular department motorcycle operator training course or other approved activity. Such information shall be reported before 9:30 a.m. the Monday following such instruction. If the department is closed on a Monday, the required information shall be reported by 9:30 a.m. the next working day.

2. Failure to comply with all appropriate manual regulations and procedures or to submit or report the information as required in this Chapter may result in dismissal as a department employee and/or delayed payment for approved services. No instructor shall receive wages for services that are not pre-approved in writing by the program coordinator and in accordance with established program rules and regulations.

AUTHORITY NOTE: Promulgated in accordance with R.S.32:402.3.

HISTORICAL NOTE: Promulgated by the Department of Public Safety and Corrections, Office of State Police, LR 36:541 (March 2010).

§3125. Motorcycle Operator Training

A. Training Facilities and Sites

1. Training facilities include an adequate classroom, driving range, and storage area that at a minimum, meet the standards listed in the curriculum guide approved by the program coordinator.

2. All proposed program training facilities and sites shall be subject to inspection by the program coordinator prior to initial use. Established sites are subject to inspection by same during course implementation.

3. The lead instructor shall be responsible for all administrative duties, equipment procurement, and training facility management associated with student registration, on site preparation, and implementation of a particular course.

4. Approval by the program coordinator shall not be granted for any instructor to lease or rent any proposed equipment, training facility, or training site for use through the program. Instructors making such agreements or expenditures shall not be reimbursed for expenses related to such actions.

B. Training Apparel

1. All course instructors, students and range aides shall wear at a minimum the following training apparel and equipment while sitting upon, maneuvering, operating or riding a motorcycle on the course range:

a. helmet (DOT approved);

b. eye protection (i.e., face shield, safety glasses, prescription eye glasses, goggles). Windshields shall not be substituted for any of these eye protection devices;

c. long pants (must cover knees and calves);

d. long sleeved full bodied jacket or shirt (must cover elbows and forearms);

e. gloves (must completely cover palms and all fingers);

f. boots (must cover ankles). High top tennis shoes are acceptable, but should be discouraged. Footwear with heels over two inches tall shall not be worn by course participants during range sessions.

2. Students shall provide all of the apparel and equipment listed in this Chapter for use in any program motorcycle operator training course.

3. Instructor Training Equipment Apparel and Dress Code

a. Program motorcycle safety instructors shall be required to wear the safety apparel referenced in this Chapter while sitting upon, maneuvering, operating, or riding a motorcycle during their course driving range sessions and related activities. Instructors should wear safety apparel meeting these minimum standards while operating or riding a motorcycle on public roads and highways.

b. Instructors are required to maintain a professional appearance when conducting a course as prescribed by the department.

c. Shirts with sleeves (short sleeves acceptable), long pants, and appropriate footwear shall be worn during all course instruction when the other aforementioned safety apparel is not necessary or required.

d. Instructors shall not wear shorts, tank tops or sandals while providing approved motorcycle operator training courses.

C. Trainer Motorcycles

1. Loan-trainer motorcycles shall be obtained from franchised motorcycle dealers and only upon written approval by the program coordinator. Department owned or loan-trainer motorcycles shall not be utilized in advanced motorcycle operator training courses.

2. The program coordinator shall complete and process any program loan agreement form(s) designed for the purpose of obtaining loan-trainer motorcycles for use in program activities.

3. Instructors shall not take delivery of loan-trainer motorcycles from motorcycle dealers until the program coordinator has acquired adequate insurance for the motorcycles. It shall be the responsibility of the instructor taking delivery of the motorcycles to verify such coverage.

4. Instructors shall maintain and operate the loan-trainer motorcycles assigned to them, as per the terms of the approved Motorcycle Loan Agreement Form (MLAF). This agreement form is not included in these regulations. The form is available from the program coordinator.

5. There shall be a minimum of one trainer motorcycle available for use by each operator student participating in a basic course driving range exercise.

6. Loan-trainer motorcycles shall be operated only during course range exercises; they shall not be operated or ridden off the course site driving range.

7. No trainer motorcycle shall be operated at a speed exceeding 20 miles per hour during any basic course range exercise and 25 miles per hour during any advanced course range exercise.

8. There shall not be more than eight trainer motorcycles on the range or in operation during any course driving range exercise if there is only one instructor teaching on that same driving range. There shall be not be more than 12 motorcycles on the range or in operation on a course driving range exercise if there are two or more instructors teaching on the same driving range. At no time shall there be more than 12 motorcycles in operation on the driving range of any course during range exercise execution.

9. It shall be the responsibility of the lead motorcycle safety instructor to whom certain loan-trainer motorcycles are assigned for a given course to secure, garage, maintain and protect those loan trainer motorcycles from theft and environmental damage and degradation. Any department owned or loan-trainer motorcycles placed in storage must have all keys removed and secured. The steering forks should be locked whenever possible.

10. It shall be the responsibility of the motorcycle safety instructor to whom certain loan-trainer motorcycles are assigned to return these motorcycles to the appropriate motorcycle dealer as per the terms set forth on the MLAF. In addition, the program coordinator shall be notified immediately by the above-mentioned instructor that the motorcycles have been returned.

11. No trainer motorcycle shall be occupied, operated, or manipulated on the range training site during course preparation or implementation by any individual not officially instructing or enrolled in that course. Loan-trainer motorcycles shall be operated in compliance with the terms of this manual and the approved MLAF. It shall be the responsibility of all program instructional staff utilizing loan-trainer motorcycles to read the MLAF and adhere to all of the criteria expressed thereon.

12. Instructors shall not direct any student to operate, push, or manipulate a trainer motorcycle on any public street or highway.

AUTHORITY NOTE: Promulgated in accordance with R.S.32:402.3.

HISTORICAL NOTE: Promulgated by the Department of Public Safety and Corrections, Office of State Police, LR 36:542 (March 2010).

§3127. Program Insurance and Reporting Accidents

A. Program Insurance

1. Proposed motorcycle operator training courses or other proposed program activities to be conducted on or with properties and/or equipment owned or not owned by the state shall be reported to the program coordinator in order that the Office of Risk Management can provide appropriate insurance coverage for loan-trainer motorcycles and/or the conduct of the course or activity offered and provide certificates of insurance, as proof of coverage, if needed. Appropriate insurance for the program will be obtained through the Office of Risk Management as per R.S. 39:1527 et seq., for the purpose of acquiring general liability coverage, etc. No proposed program course or activity may be conducted without first obtaining written approval from the program coordinator as per this Chapter.

B. Reporting of Accidents and Damages

1. If an injury to an individual occurs as a result of the conduct of a program activity or course and/or if the individual requires treatment by a physician or medical technicians and/or hospitalization, the injury shall be orally reported to the program coordinator or designee by the course lead instructor as soon as possible but no later than four working days after the accident. In addition, an Accident/Injury Report(s) (MS6) shall be submitted to the program coordinator within four working days of the accident. (An accident as it relates to the program shall be defined as an incident in which a course student or instructor drops the motorcycle causing any part of the motorcycle, other than the tires, to touch the ground, or an incident in which the motorcycle comes into contact with any other moving object or fixed object (other than marker cones), or an incident in which any individual has discomfort, pain, or injury inflicted by a training motorcycle or the course training process.

2. Completed Accident and Injury Report (MS6) must be submitted to the Department of Public Safety and Corrections, Transportation and Environmental Safety Section, 7919 Independence Blvd., Box 832, Baton Rouge, LA 70806, telephone (225) 925-6113. Instructors should copy Form MS6 as needed.

3. Copies of notices, summons or other legal documents, pertaining to a claim or suit against the department or its personnel should be forwarded immediately by the motorcycles safety instructor receiving same to the program coordinator for review by appropriate authorities

AUTHORITY NOTE: Promulgated in accordance with R.S.32:402.3.

HISTORICAL NOTE: Promulgated by the Department of Public Safety and Corrections, Office of State Police, LR 36:543 (March 2010).

§3129. First Aid

A. First Aid Supplies and Treatment

1. Every lead instructor conducting a department motorcycle operator training course shall have a fully charged fire extinguisher and a first aid kit available on the training site at all times during a course.

2. The first aid kit shall contain supplies necessary to treat minor injuries, to help prevent loss of blood, and to provide some comfort. At a minimum, it should contain the following supplies:

a. sufficient gauze wrappings to make up a compression bandage;

b. several dressings;

c. several different sized band-aids;

d. roll of medical tape;

e. information on the treatment of minor wounds and injuries.

3. Instructors may supplement the above with aspirin, burn ointment, medical gloves, etc. Instructors shall not administer prescription medication to any student for whom it was not prescribed by a physician.

4. In the event of an injury resulting from the conduct of a motorcycle operator training course, the course instructor(s) shall act with prudence and dispatch in dealing with the immediate medical needs of the injured party. Such action may include, but is not limited to, the administering of first aid to the best of the instructor's ability and the requesting of emergency medical service (EMS).

AUTHORITY NOTE: Promulgated in accordance with R.S.32:402.3.

HISTORICAL NOTE: Promulgated by the Department of Public Safety and Corrections, Office of State Police, LR 36:543 (March 2010).

§3131. Program Materials and Equipment

A. Course Banner

1. The course lead instructor shall display any department banner provided by the program coordinator for such purpose at the course driving range site during all practical exercises. The banner shall be located in plain view of the general public and shall be taken down at the end of the practical exercises each day of the course.

B. Report of Student Enrollment

1. Any instructor utilizing program material and/or receiving department/program wages shall report on the Student Information and Performance List (Form MS2) the names of any and all individuals participating in any activity connected with the use of that material or issuance of such wages.

C. Material and Equipment Procurement

1. No instructor shall be granted reimbursement for the purchase of program supplies other than fluids utilized by the training motorcycles.

2. To claim reimbursement for such fluids the instructor shall complete the requisite department travel expense form and submit the original related receipts.

3. The purchase of all other appropriate program materials and supplies shall only be made by the program coordinator.

4. Reimbursement expense claims not in proportion and deemed inappropriate for the conduct of a particular course/ activity will be subject to audit, revision and appropriate payment by the program coordinator and/ or department appropriation control staff.

5. No instructor shall charge or attempt to charge merchandise for use in the program to the Department of Public Safety and Corrections or to any other state agency.

D. Reporting Stolen Equipment

1. The instructor shall have the appropriate law enforcement report completed for any department equipment on loan to an instructor that is reported stolen and for damage(s) to a program mobile training unit involved a traffic accident or vandalism.

E. Equipment and Materials Returned

1. All program material and equipment loaned to an instructor shall be returned to the department by the instructor as per any arrangements made prior to such loan or upon request by the program coordinator.

F. Mobile Training Units: Use and Maintenance

1. Mobile training units shall be used solely for the purpose of transporting materials, equipment, and vehicles directly related to the implementation of impending program motorcycle operator training courses or activities.

2. Mobile training units shall be operated, towed, or moved by program staff only.

3. Mobile training units shall be operated, towed, or moved in accordance with all appropriate state laws and regulations.

4. No trainer motorcycle shall be transported via a mobile training unit without first having been properly secured with tie down straps in a fashion as directed by the program coordinator or delegated program staff. Instructors shall supply such straps.

5. Mobile training units or any parts thereof shall not be altered in any fashion by instructors or others. Such unit parts include hitch, wiring, storage box, lights, tires, wheels, safety chains, etc.

6. Mobile training units shall be utilized to transport only those motorcycles owned or officially on loan to the department through a written agreement.

AUTHORITY NOTE: Promulgated in accordance with R.S.32:402.3.
HISTORICAL NOTE: Promulgated by the Department of Public Safety and Corrections, Office of State Police, LR 36:544 (March 2010).

§3133. Student Completion Certificates

A. Motorcycle Operator Training Course Certificates

1. All students successfully completing a basic course conducted in accordance with the regulations and procedures herein shall receive a department certificate indicating such.

2. All students successfully completing an advanced course conducted in accordance with the regulations and procedures herein shall receive a department certificate indicating such.

B. Exemption from taking State Driver's License Motorcycle Operator Skill Test

1. A student applying for a motorcycle endorsement on his/her driver's license shall not be required to take the Department of Public Safety and Correction, Office of Motor Vehicles, motorcycle operator skill test if the student has successfully completed a Department of Public Safety and Correction Basic Motorcycle Operator Training Course (R.S.32:402.3) and presents the basic course completion certificate to the license examiner upon endorsement application.

AUTHORITY NOTE: Promulgated in accordance with R.S.32:402.3.
HISTORICAL NOTE: Promulgated by the Department of Public Safety and Corrections, Office of State Police, LR 36:544 (March 2010).

§3135. Program Form Duplication and Availability Policy

A. Copies of the program forms located in the appendices may be made when needed. The originals should be retained in the manual for future use in making copies.

B. Forms shall not be modified or altered in any manner. Instructors unable to make copies may obtain packets of the forms from the program coordinator upon a request received by same at least 10 working days before needed delivery.

AUTHORITY NOTE: Promulgated in accordance with R.S.32:402.3.
HISTORICAL NOTE: Promulgated by the Department of Public Safety and Corrections, Office of State Police, LR 36:545 (March 2010).

§3137. Public Information Policy

A. The Department of Public Safety and Corrections shall be orally acknowledged to participants at the beginning of any motorcycle operator-training course or program activity by the lead motorcycle safety instructor as the state agency conducting and sponsoring the course or activity.

B. Those working "in cooperation" with the department to implement a course should also be acknowledged as such. Such entities are usually recognized for providing:

1. loan motorcycles;

2. course facilities;

3. support services (i.e. volunteers, refreshments, materials, etc.).

C. The instructor shall provide the name/title, mailing address and telephone number, etc., of the contact person allowing him to use the property on which he will store motorcycles and conduct any sessions of the course(s) listed.

D. The instructor shall provide the balance of the information requested and sign the application. The application is not valid without the signature of the instructor completing the form.

AUTHORITY NOTE: Promulgated in accordance with R.S.32:402.3.
HISTORICAL NOTE: Promulgated by the Department of Public Safety and Corrections, Office of State Police, LR 36:545 (March 2010).

Chapter 33. Rulemaking Petitions

§3301. Submission of a Rulemaking Petition

A. In accordance with R.S. 49:953(C)(1), any interested person may petition an agency to adopt a new rule, or to amend or repeal an existing rule.

B. To petition the Office of State Police, commonly known as and hereafter referred to as the Louisiana State Police, for the adoption, amending or repeal of any rule, an interested person shall submit in writing the Department of Public Safety's petition for rulemaking form to Louisiana State Police at 7919 Independence Boulevard, Box A-24, Baton Rouge, LA 70806, Attn: Rulemaking Petition, which contains the following basic information organized and captioned:

1. the petitioner's name and address;

2. the specific rulemaking agency to be petitioned within the Department of Public Safety as listed on the form;

3. a brief description of the facts or justification supporting the petitioner's request for the adoption of a rule or the amending of a rule that has already been adopted;

4. suggested specific language or language setting forth the substance of the proposed rule or rule change that is

being requested, which may be attached to, or in addition to, the petition for rulemaking form;

5. a copy of each and every document upon which the petitioner bases the petitioner's request for a rule or a citation of the information and where it can be easily obtained for review by the rulemaking agency;

6. the petitioner's signature and date of signature.

C. The Department of Public Safety's petition for rulemaking form can be found on the official website of the Louisiana State Police.

AUTHORITY NOTE: Promulgated in accordance with Act 454 of the 2018 Regular Legislative Session and R.S. 49:953, et seq.

HISTORICAL NOTE: Promulgated by the Department of Public Safety and Corrections, Office of State Police, LR 46:702 (May 2020).

§3303. Consideration of a Rulemaking Petition

A. Upon receipt of a petition for rulemaking form, the superintendent shall forward the petition to the agency designee. The agency designee shall review the petition for completeness pursuant to the requirements listed in LAC 55:I.3301.B. If the petition is found to be complete, the agency designee shall consider the petition.

B. Within 90 days of receipt of the petition, the superintendent or the agency designee shall either:

1. initiate rulemaking procedures to adopt a new rule, or to amend an existing rule; or

2. notify the petitioner in writing of the denial to proceed with rulemaking, stating the reason(s) therefore.

C. Whenever the superintendent or the agency designee determines that a public hearing should be held prior to the adoption of any rule or rule change, a notice of the meeting date, time and place will be published in the *Louisiana Register*.

AUTHORITY NOTE: Promulgated in accordance with Act 454 of the 2018 Regular Legislative Session and R.S. 49:953, et seq.

HISTORICAL NOTE: Promulgated by the Department of Public Safety and Corrections, Office of State Police, LR 46:702 (May 2020).

Title 55
PUBLIC SAFETY
Part III. Motor Vehicles

Chapter 1. Driver's License
Subchapter A. General Requirements

§100. Definitions

A. As used in this Chapter, the following terms have the meanings described below.

Department—Department of Public Safety and Corrections, Office of Motor Vehicles, except in the case of commercial driving schools, in which case department shall mean the Department of Public Safety and Corrections, Office of State Police, Safety Enforcement Section.

Driver Privacy Protection Act—the federal Driver Privacy Protection Act of 1994 (DPPA) (Title XXX of P.L. 103-322), 18 U.S.C. §2721 et seq., as implemented by the department in the *Louisiana Administrative Code*, Title 55, Part III, Chapter 5, Subchapter B.

Personal Information—information which includes the full name, complete physical address, and date of birth.

AUTHORITY NOTE: Promulgated in accordance with R.S. 32:401 et seq.

HISTORICAL NOTE: Promulgated by the Department of Public Safety and Corrections, Office of Motor Vehicles, LR 24:2312 (December 1998).

§101. General Knowledge Required of All Applicants for a Commercial Driver's License

A. All commercial motor vehicle operators must have knowledge of:

1. safe operations regulations—driver-related elements of:

a. motor vehicle inspection, repair, and maintenance;

b. procedures for safe vehicle operations;

c. the effects of fatigue, poor vision, hearing, and general health upon safe commercial motor vehicle operation;

d. the types of motor vehicles and cargoes subject to the requirements of 49 CFR Part 397 and R.S. 32:408; and

e. the effects of alcohol and drug use upon safe commercial motor vehicle operations;

2. commercial motor vehicle safety control systems—proper use of the motor vehicle's safety system, including lights, horns, side and rear-view mirrors, proper mirror adjustments, fire extinguishers, symptoms of improper operation revealed through instruments, motor vehicle operation characteristics, and diagnosing malfunctions. The commercial driver shall have knowledge on the correct procedures needed to use these safety systems in an emergency situation, e.g., skids and loss of brakes;

3. safe vehicle control:

a. control systems—the purpose and function of the controls and instruments commonly found on commercial motor vehicles;

b. basic control—the proper procedures for performing various basic maneuvers, including:

i. starting, warming up, and shutting down the engine;

ii. putting the vehicle in motion and stopping;

iii. backing in a straight line; and

iv. turning the vehicle, e.g., basic rules, offtracking, right/left turns and right curves;

c. shifting—the basic shifting rules and terms, as well as shift pattens and procedures for common transmissions, including:

i. key elements of shifting, e.g., control, when to shift and double clutching;

ii. shift pattens and procedures; and

iii. consequences of improper shifting;

d. backing—the procedures and rules for various backing maneuvers, including:

i. backing principles and rules; and

ii. basic backing maneuvers, e.g., straight-line backing, and backing on a curved path;

e. visual search—the importance of proper visual search and proper visual search methods, including:

i. seeing ahead and to the sides;

ii. use of mirrors; and

iii. seeing to the rear;

f. communication—the principles and procedures for proper communications and the hazards of failure to signal properly, including:

i. signaling intent, e.g., signaling and changing speed or direction in traffic;

ii. communicating presence, e.g., using horn or lights to signal presence; and

iii. misuse of communications;

g. speed management—the importance of understanding the effects of speed, including:

i. speed and stopping distance;

ii. speed and surface conditions;

iii. speed and the shape of the road;

iv. speed and visibility; and

v. speed and traffic flow;

h. space management—the procedures and techniques for controlling the space around the vehicle, including:

i. the importance of space management;

ii. space cushions, e.g., controlling space ahead and to the rear;

iii. space to the sides; and

iv. space for traffic gaps;

i. night operation—preparations and procedures for night driving, including:

i. night driving factors, e.g., driver factors (vision, glare, fatigue, inexperience), roadway factors (low illumination, variation in illumination, familiarity with roads, other road users, especially drivers exhibiting erratic or improper driving), vehicle factors (headlights, auxiliary lights, turn signals, windshields and mirrors); and

ii. night driving procedures, e.g. preparing to drive at night and driving at night;

j. extreme driving conditions—the basic information on operating in extreme driving conditions and the hazards that are encountered in extreme conditions, including:

i. adverse weather;

ii. hot weather; and

iii. mountain driving;

k. hazard perceptions—the basic information on hazard perception and clues or recognition of hazards, including:

i. importance of hazard recognition;

ii. road characteristics; and

iii. road user activities;

l. emergency maneuvers—the basic information concerning when and how to make emergency maneuvers, including:

i. evasive steering;

ii. emergency stop;

iii. off-road recovery;

iv. brake failure; and

v. blowouts;

m. skid control and recovery—the information on the causes and major types of skids, as well as the procedures for recovering from skids;

4. relationship of cargo to vehicle control—the principles and procedures for the proper handling of cargo, including:

a. the importance of proper cargo handling, e.g., consequences of improperly secured cargo, drivers' responsibilities, federal/state and local regulations;

b. principles of weight distribution; and

c. principles of cargo securement;

5. vehicle inspections—the objectives and proper procedures for performing vehicle safety inspections, as follows:

a. the importance of periodic inspections and repair to vehicle safety and prevention of enroute breakdowns;

b. the effects of undiscovered malfunctions upon safety;

c. what safety related parts to look for when inspecting vehicles, e.g.:

i. fluid leaks;

ii. interference with visibility;

iii. excessively worn tires;

iv. wheel and rim defects;

v. braking systems defects;

vi. steering system defects;

vii. suspension system defects;

viii. exhaust system defects;

ix. coupling system defects; and

x. cargo problems;

d. pre-trip/enroute/post-trip inspection procedures; and

e. reporting findings;

6. hazardous materials knowledge—such as:

a. what constitutes hazardous material requiring an endorsement to transport;

b. classes of hazardous materials;

c. labeling and placarding requirements; and

d. the need for specialized training as a prerequisite to receiving the endorsement and transporting hazardous cargoes;

7. airbrake knowledge:

a. general airbrake system nomenclature;

b. the dangers of contaminated air supply (dirt, moisture and oil);

c. implications of severed or disconnected air lines between the power unit and the trailer(s);

d. implications of low air pressure readings;

e. procedures to conduct safe and accurate pre-trip inspections, including knowledge about:

i. automatic fail safe devices;

ii. system monitoring devices; and

iii. low pressure warning alarms;

f. procedures for air actuated systems, including the ability to detect defects which may cause the system to fail, including:

i. tests which indicate the amount of air loss from the braking system within a specified period, with and without the engine running; and

ii. tests which indicate the pressure levels at which the low air pressure warning devices and the tractor protection valve should activate.

B. The following additional knowledge shall be required for the combination vehicle group:

1. coupling and uncoupling—the procedures for proper coupling and uncoupling a tractor to semi-trailer; and

2. vehicle inspection—the objectives and proper procedures that are unique for performing vehicle safety inspections on combination vehicles.

AUTHORITY NOTE: Promulgated in accordance with R.S. 32:408.

HISTORICAL NOTE: Filed by the Department of Public Safety, Office of Motor Vehicle, 1974, promulgated and amended by the Department of Public Safety and Corrections, Office of Motor Vehicles, LR 15:1089 (December 1989), amended LR 24:2312 (December 1998).

§103. Examinations and Skills Tests

A. All examinations and skills tests shall be constructed in such a way as to determine if the applicant possesses the required knowledge and skills contained in the driver's manual made available to all applicants by the Office of Motor Vehicles and the skills required by these regulations.

B. Each basic knowledge test for any applicable vehicle group shall contain at least 30 items, exclusive of the number of items testing airbrake knowledge or any special endorsements.

C. Each endorsement knowledge test, and the airbrake component of the basic knowledge test, shall contain a number of questions that is sufficient to test the driver applicant's knowledge of the required subject matter with validity and reliability.

1. The driver applicant must correctly answer at least 80 percent of the questions on each knowledge test in order to achieve a passing score.

2. To achieve a passing score on the skills test, the driver applicant must demonstrate that he can successfully perform all of the skills required and achieve at least an 80 percent satisfactory completion rating by the examiner.

3. If the driver applicant does not obey applicable traffic laws, or causes an accident during the test, he shall automatically fail the skills test.

4. The scoring of the basic knowledge and skills test shall be adjusted to allow for the airbrake restriction.

5. If the applicant scores less than 80 percent on the airbrake component of the basic knowledge test as described above, the driver will have failed the airbrake component, and if the driver is issued a commercial driver's license, an airbrake restriction shall be indicated on said license.

6. If the applicant performs the skills test in a vehicle not equipped with airbrakes, and is issued a commercial driver's license, the airbrake restriction shall be indicated on said license. If the applicant performs the skills test in a vehicle equipped with partial airbrakes (air over hydraulics), and is issued a commercial driver’s license, the "no full airbrake" restriction shall be indicated on said license.

D. Except as otherwise provided herein, a person shall not drive a motor vehicle unless he has first taken a written examination administered by the Office of Motor Vehicles.

1. The written examination shall be administered by the Office of Motor Vehicles, on a form prescribed by the Office of Motor Vehicles.

2. Prior to and during the examination, the applicant shall be permitted to examine and consult a copy of the federal motor carrier safety regulations.

3. There is no time limit for completing the examination and the persons taking it shall be so advised in advance.

4. Upon completion of the examination and its grading by the examiner, the examiner shall advise the applicant of the correct answers to any questions which the applicant failed to answer correctly and additional instructions in the pertinent regulations as appears to be warranted on the basis of the applicant's performance on the examination.

E. Except as otherwise provided herein, a person shall not drive a commercial motor vehicle unless he first successfully completed a skills test and has been issued a certificate, or other proof of successful completion of a skills test, of successful completion of a skills test in accordance with this Section.

F. The skills test shall be administered by the Office of Motor Vehicles or by a designated third-party examiner.

1. The skills test must be of sufficient duration to enable the person who administers it to evaluate the skill of the applicant who takes it in the handling of the commercial motor vehicle, and associated equipment, that the motor carrier intends to assign to the applicant or which the applicant anticipates operating.

2. At a minimum, the applicant must be tested, while operating the type or class of commercial motor vehicle which the applicant intends to operate, on his skill at performing each of the following operations:

a. a pre-trip inspection during which the following equipment situations are inspected:

i. service brakes, including trailer brake connections;

ii. parking or hand brake;

iii. steering mechanism;

iv. lighting devices and reflectors;

v. tires;

vi. horn;

vii. windshield wiper or wipers and washers;

viii. rear-vision mirror or mirrors;

ix. all coupling devices;

x. all required emergency equipment; and

xi. the loading condition and load-securing devices; and

b. placing the vehicle in operation, including the proper procedures for performing starting, warming up, shutting down the engine, placing the vehicle smoothly and safely in motion and stopping, backing in a straight line, backing through a curve, turning the vehicle, shifting, use of turn signals and hand signals, use of mirrors, and speed and space management procedures.

G. The Office of Motor Vehicles shall provide a skills test grading sheet on a form to be designated by it upon which the examiner shall rate the performance of the applicant who takes the skills test for each operation or activity which is a part of the test. The examiner shall require the applicant to sign the test form at the beginning of the skills test and shall state the date and time upon which the test was administered.

1. If the applicant attains a passing score of 80 percent or better on the skills test, the Office of Motor Vehicles, or the designated third-party examiner, shall issue proof of successful completion in a manner prescribed by the Office of Motor Vehicles.

2. A motor carrier may require any person who presents a certificate of successful completion of a skills test to take a skills test as a condition of his employment by the motor carrier.

H. The Office of Motor Vehicles may require an applicant for a commercial driver's license to adequately demonstrate knowledge and/or skills set forth in Parts 383-399 of the federal motor carrier safety regulations, which regulations are incorporated herein and made a part hereof by reference hereto.

I. In addition to the above, all applicants for a commercial driver's license shall satisfactorily demonstrate knowledge and/or skills to be designated herein for each endorsement to a commercial driver's license.

AUTHORITY NOTE: Promulgated in accordance with R.S. 32:408.

HISTORICAL NOTE: Filed by the Department of Public Safety, Office of Motor Vehicle, 1974, promulgated and amended by the Department of Public Safety and Corrections, Office of Motor Vehicles, LR 15:1090 (December 1989), amended LR 24:2312 (December 1998), LR 40:90 (January 2014).

§107. Knowledge and Skills Test for Endorsements to a Commercial Driver's License

A. The following tests are required for endorsements to a commercial driver's license.

1. Double/Triple Trailer Endorsements. In order to obtain a double/triple trailer endorsement an applicant must satisfactory demonstrate knowledge covering:

a. procedure for assembly and hookup of units;

b. proper placement of the heaviest trailer;

c. coupling and uncoupling of units;

d. handling and stability characteristics, including offtracking, response to steering, sensory feedback, braking, oscillatory sway, roll over in steady turns and skid avoidance;

e. potential problems in traffic operations, including problems the double/triple trailer motor vehicle creates for other motorists due to slower speeds on steep grades, longer passing times, possibility for blocking entry or exit of other vehicles on freeways, splash and spray impacts, aerodynamic buffeting, view-blockages and lateral placement; and

f. skills test during which the basic maneuvers specified in §113 must be satisfactorily performed.

2. Passenger Endorsement. In order to obtain a passenger endorsement, an applicant must satisfactory demonstrate the additional knowledge and test requirements set forth below:

a. all applicants for the passenger endorsement must have knowledge covering the following topics:

i. proper procedures for loading and unloading of passengers;

ii. proper use of emergency exits, including push-out windows;

iii. proper safety and emergency equipment requirements for the type of passenger vehicle to be operated;

iv. proper responses to such emergency situations as fires and unruly passengers;

v. proper procedures at railroad crossing and draw bridges; and

vi. proper braking procedures;

b. an applicant for a passenger endorsement applicable to a specific vehicle group shall take his skills test in a passenger vehicle satisfying the requirements of that group as defined in 49 CFR §383.91.

3. Tank Vehicle Endorsement. In order to obtain a Tank Vehicle Endorsement, each applicant must have knowledge covering the following:

a. causes, prevention, and effects of cargo surge on motor vehicle handling;

b. proper braking procedures for the motor vehicle when it is empty, full and partially full;

c. differences in handling of baffled/compartmental tank interiors versus non-baffled motor vehicles;

d. differences in tank vehicle type and construction;

e. differences in cargo surge for liquids of varying product densities;

f. effects of road grade and curvature on motor vehicle handling with filled, half-filled and empty tanks;

g. proper use of emergency systems; and

h. for drivers of DOT specification tank vehicles, retest and marking requirements.

4. Requirements for Hazardous Materials Endorsement. In order to obtain a Hazardous Material Endorsement each applicant shall have such knowledge as is required of a driver of a hazardous materials laden vehicle, from information contained in 49 CFR Parts 171, 172, 173, 177, 178, and 397 on the following:

a. hazardous materials' regulations including:

i. hazardous materials table;

ii. shipping paper requirements;

iii. marking;

iv. labeling;

v. placarding requirements;

vi. hazardous materials packaging;

vii. hazardous materials definitions and preparation;

viii. other regulated material (e.g., ORM-D);

ix. reporting hazardous materials accidents; and

x. tunnels and railroad crossings;

b. hazardous materials' handling including:

i. forbidden materials and packages;

ii. loading and unloading materials;

iii. cargo segregation;

iv. passenger carrying buses and hazardous materials;

v. attendance of motor vehicles;

vi. parking;

vii. routes;

viii. cargo tanks; and

ix. "Safe Havens";

c. operation of emergency equipment including:

i. use of equipment to protect the public;

ii. special precautions for equipment to be used in fires;

iii. special precautions for use of emergency equipment when loading or unloading a hazardous materials laden motor vehicle; and

iv. use of emergency equipment for tank vehicles;

d. emergency response procedures including:

i. special care and precautions for different types of accidents;

ii. special precautions for driving near a fire and carrying hazardous materials, and smoking and carrying hazardous materials;

iii. emergency procedures; and

iv. existence of special requirements for transporting Class A and B explosives;

e. Title 46, *Code of Federal Regulations*, Parts 30-60, 64, 98, 148, and 151;

f. Title 49, *Code of Federal Regulations*, Parts 391-396, pertaining to the knowledge of hazardous materials on highways;

g. R.S. 32:1501-1520;

h. hazardous materials handling, including forbidden materials, loading and unloading materials, cargo segregation, passenger-carrying buses and hazardous materials, attendance of motor vehicles, cargo tanks, and "Safe Havens";

i. operation of emergency equipment including use of equipment to protect the public, special precautions for equipment to be used in fires, special precautions for the use of emergency equipment when loading or unloading of hazardous materials, use of emergency equipment for tank vehicles and required emergency equipment for vehicles hauling or handling hazardous materials; and

j. emergency response equipment including the special care and precautions necessary for different types of accidents, special precautions for driving in the vicinity of a fire with hazardous materials, smoking and transporting hazardous materials, emergency procedures and existence of special requirements for transporting Class A and B explosives.

5. Combination Tank Vehicle and Hazardous Materials. In order for an applicant to obtain a combination tank vehicle and hazardous materials' endorsement, he shall

make a satisfactory demonstration of his knowledge by obtaining an 80 percent or better score on the knowledge test of all the requirements set forth above for the applicable type and class of vehicle and hazardous material requirements.

6. School Bus. In order to obtain a school bus endorsement, an applicant must satisfactorily demonstrate the additional knowledge and test requirements set forth below.

a. An applicant for the school bus endorsement must satisfy the following three requirements:

i. qualify for a passenger vehicle endorsement. Pass the knowledge and skills test for obtaining a passenger vehicle endorsement;

ii. knowledge test. Must have knowledge covering the following topics:

(a). loading and unloading children, including the safe operation of stop signal devices, external mirror systems, flashing lights, and other warning and passenger safety devices required for school buses by state of federal law or regulation;

(b). emergency exits and procedures for safely evacuating passengers in an emergency;

(c). state and federal laws and regulations related to safely traversing railroad-highway rail grade crossings; and

(d). operating practices and procedures not otherwise specified;

iii. skills test. Must take a driving skills test in a school bus of the same vehicle group as the school bus applicant will drive. If applying for a passenger and school bus endorsement, a skills test in a school bus will satisfy the required skills test listed in this Section.

AUTHORITY NOTE: Promulgated in accordance with R.S. 32:408.

HISTORICAL NOTE: Filed by the Department of Public Safety, Office of Motor Vehicle, 1974, promulgated and amended by the Department of Public Safety and Corrections, Office of Motor Vehicles, LR 15:1092 (December 1989), amended LR 24:2313 (December 1998), LR 40:91 (January 2014).

§108. Designations or Restrictions on Driver's Licenses and Identification Cards

A. Needs Accommodation

1. A special Louisiana driver's license or identification card shall be issued to any applicant upon request who needs accommodation. The designation shall be issued by the Department and exhibited on the driver's license or identification card.

2. A "Needs Accommodation" designation shall be exhibited on a personal class or chauffer's class license or identification card.

3. Only applicants with a physical, mental or developmental disability documented as required in Paragraph A.4. of this section are eligible for the designation "Needs Accommodation."

4. All applications for a "Needs Accommodation" designation shall be accompanied by a statement, on a form provided by the Department, from a qualified medical professional licensed in Louisiana or another state or territory of the United States, stating the medical information which establishes the mental, physical, or developmental disability required to obtain the designation authorized in this Section.

5. If the holder of a driver's license or identification card with a "Needs Accommodation" designation no longer wishes to have the designation displayed on the driver's license or identification card, the holder shall return the credential the department for cancellation.

6. No additional fee shall be charged to include such a designation. The charge for a "Needs Accommodation" driver's license or identification card shall be the same as for regular driver's license.

B. Deaf or Hard of Hearing

1. A special Louisiana driver's license card shall be issued to any applicant who is deaf or hard of hearing.

2. A restriction code will be placed on the driver's license for deaf or hard of hearing and these codes will be inclusive of a restriction 41 as well.

3. Only applicants who are deaf or hard of hearing documented as required in Paragraph B.4. of this Section are eligible to have the restriction code placed on their driver's license.

4. All applications for a deaf or hard of hearing restriction shall be accompanied by a medical examination form from a qualified medical, audiologist, or speech pathologist professional licensed in Louisiana stating the medical information which establishes the applicant is deaf or hard of hearing.

5. No additional fee shall be charged to include such restriction. The charge for a driver's license inclusive of the restrictions shall be the same as for regular driver's license.

AUTHORITY NOTE: Promulgated in accordance with R.S. 32:412(O) and R.S. 32:403.3.

HISTORICAL NOTE: Promulgated by the Department of Public Safety and Corrections, Public Safety Services, Office of Motor Vehicles, LR 44:2020 (November 2018).

§109. Color of License

A. Except as otherwise provided herein, the background of all commercial drivers' licenses, Classes "A", "B", and "C", shall be gold in color and shall specify on the front thereof "commercial driver's license" or "CDL".

B. The background of all driver's licenses issued to minors shall be red in color to insure ease of identification.

AUTHORITY NOTE: Promulgated in accordance with R.S. 32:408.

HISTORICAL NOTE: Filed by the Department of Public Safety, Office of Motor Vehicle, 1974, promulgated and amended by the Department of Public Safety and Corrections, Office of Motor Vehicles, LR 15:1093 (December 1989), amended LR 24:2314 (December 1998).

§110. U.S. Veterans Driver's License

A. A special Louisiana driver's license, regardless of its class, shall be issued to any veteran of the Armed Forces of the United States with the word “veteran” exhibited in the color black below the person’s photograph on the driver's license.

B. Eligibility. A qualified veteran shall include any veteran who has served 90 days military duty in a branch of the United States Armed Forces.

C. Requirements

1. All applications for veteran driver's license must be accompanied by a DD Form 214 or one of the following Department of Defense form 214 (DD_214) equivalents:

a. Pre DD 214 era documents (1941_1950):

i. WE AGO (war department adjutant general) Forms, to include WD AGO 53, WD AGO 55, WD AGO 53_55;

ii. JAVPERS (naval personnel) discharge documents, to include NAVPERS 553, NAVMC78PD, NAVCG 553.

b. National Personnel Records Center NPRC "statement of service," issued as a result of a destroyed discharge record during the 1973 National Archives fire.

c. National Guard/Air National Guard must have NGB_22 with 6 or more years of service.

2. The applicant must have received a character of service discharge that is either classified as "honorable" or "under honorable conditions (general)."

3. If the applicant is required to be registered as a sex offender pursuant to Chapter 3-B of Title 15, then the applicant shall not have the word "veteran" displayed on the license as the words "sex offender" shall be displayed below the person's photograph on the driver's license.

D. Cancellation. If the owner of a veteran driver's license no longer wishes to display "veteran" on the driver's license, the license shall be returned to the department for cancellation.

E. Fees. No additional fee shall be charged to include such a designation. The charge for a veteran driver's license shall be the same as for regular driver's license.

AUTHORITY NOTE: Promulgated in accordance with R.S. 32:412.

HISTORICAL NOTE: Promulgated by the Department of Public Safety and Corrections, Office of Motor Vehicles, LR 39:516 (March 2013).

§111. Change of Name or Sex

A. Place of Application, Fees, and Forms to Be Used

1. Application for a driver's license with a change of name and/or sex may be made at any driver's license field office in Louisiana or through the mail by writing the Department of Public Safety and Corrections, Office of Motor Vehicles, P.O. Box 64886, Baton Rouge, Louisiana 70896, attention Change of Name and/or Sex. Prior to the issuance of the driver's license, the applicant with a change of name and/or sex shall appear at a driver's license field office.

2. The applicant must complete those forms normally used by the Department of Public Safety in applying for either a new driver's license or a renewal of one's drivers license, as the case may be.

3. The fee for the issuance of the new license with the change of sex and/or name shall be the same as those fees charged for the issuance of new licenses or the renewal of an old license.

B. Certification of Change of Name and/or Sex

1. In the case of a change of sex, the applicant must present:

a. a medical statement signed by a physician stating that the applicant has undergone an operation for a sex change, that the operation was successful, and that a sex change has been made. The current sex status must be shown;

b. a corrected copy of a birth certificate showing the change of sex and/or name;

c. a court judgment specifying that there has been a change of sex and what the previous sex was and what the current sex is. Also, there must be an affidavit from the individual and that this change is with no intent to defraud the public.

2. In the case of a name change, the applicant must present a judgment showing that a legal name change has occurred. Further, it is necessary that a birth certificate showing the corrected name also to be presented.

C. Exceptions

1. A person requesting a change of name on his or her driver's license whereby his or her name has been changed by marriage is excepted from the foregoing rules and regulations.

2. Where applicable under the law, a notarial adoption may be used to accomplish a name change.

AUTHORITY NOTE: Promulgated in accordance with R.S. 32:408.

HISTORICAL NOTE: Promulgated by the Department of Public Safety and Corrections, Office of Motor Vehicles, LR 2:118 (April 1976), amended LR 24:2314 (December 1998).

§113. Administrative Hearing Requests for Suspensions and Disqualifications Arising from Tests for Suspected Drunken Drivers

A. All administrative hearing requests in accordance with R.S.32:667 or R.S. 32:414.2, for suspensions or disqualification, based upon a submission, or refusal to submit, to the chemical test for intoxication, that are submitted to the Department of Public Safety & Corrections, Office of Motor Vehicles, shall be received by the close of business on the thirtieth day after the date of arrest, or shall

be post-marked no later than 30 days from the date of arrest to be deemed timely.

B. In the event the arrested person was unable to make a timely request in regards to R.S.32:667 for an administrative hearing during the 30 day period due to incarceration, hospitalization, deployment to the military or due to a Gubernatorial Declaration of Emergency, the person may submit such documentation to the department, post-marked no later than 90 days from the date of arrest, which shall establish the person's inability to timely request the administrative hearing.

C. The written request for a hearing, or for an extension on a hearing request due to one of the above reason, together with the supporting documentation, shall be mailed to: Department of Public Safety and Corrections, Office of Motor Vehicles, Hearing Request, P. O. Box 64886, Baton Rouge, LA 70896-4886; or delivered to the Office of Motor Vehicle Headquarters, 7979 Independence Blvd., Baton Rouge, LA 70806.

D. Requests under this Section which are received by the Department of Public Safety and Corrections, Office of Legal Affairs within the time periods provided in Subsections A or B of this Section shall be deemed to be timely.

E. Requests under this section should not be sent directly to the Division of Administrative Law. Sending requests to the Division of Administrative Law may result in such request being untimely when delivered to the Department of Public Safety and Corrections, Office of Motor Vehicles.

AUTHORITY NOTE: Promulgated in accordance with R.S. 32:667(A).

HISTORICAL NOTE: Promulgated by the Department of Public Safety and Corrections, Office of Motor Vehicles, LR 44:2020 (November 2018).

§114. Suspension or Denial of Driving Privileges for Failure to Pay Child Support

A. The Office of Motor Vehicles will suspend the driver's license of any person that fails to pay child support upon receipt of a court order or upon notification from the Department of Children and Family Services.

B. Upon receipt of notification the Office of Motor Vehicles will add an indefinite suspension to the driver's license record unless the order of suspension issued by the court specifies a specific time period as provided in R.S. 9:315.32(A)(1)(b). In case where a specific time period has not been specified by the court, the driver's license will remain suspended until the Office of Motor Vehicles receives:

1. an order or partial compliance is received from the court and authorizes the issuance of a temporary operator license or a partial release compliance certificate is received from the Department of Children and Family Services.

C. The reinstatement fee established in R.S. 32:414(H) shall be paid prior to any reinstatement.

D. Electronic Reporting Requirements

1. The Department of Children and Family Services will electronically report orders of noncompliance, support order compliance and partial compliance releases to the Office of Motor Vehicles through secure file transfer. The file transfer shall be in the format provided by the Office of Technology Services.

2. The Office of Motor Vehicles through the Office of Technology Services will add the orders of noncompliance, support order compliance and partial compliance releases to the appropriate driver's license record.

AUTHORITY NOTE: Promulgated in accordance with Act 454 of the 2018 Regular Legislative Session and pursuant to R.S. 32:432.

HISTORICAL NOTE: Promulgated by the Department of Public Safety and Corrections, Office of Motor Vehicles, LR 46:1689 (December 2020).

§115. Intoxicating Beverages and Controlled Substances

A.1. No operator of a commercial motor vehicle shall consume an intoxicating beverage, regardless of its alcoholic content, or be under the influence of an intoxicating beverage, or controlled dangerous substance, within four hours before going on duty or operating, or having physical control of a commercial motor vehicle.

2. No operator of a commercial motor vehicle shall consume an intoxicating beverage regardless of its alcoholic content, be under the influence of any intoxicating beverage or controlled substance, or have any measure blood alcohol concentration, or a positive reading for any controlled substance or its metabolite, while on duty or while operating or in physical control of a commercial motor vehicle.

3. Additionally, no operator of a commercial motor vehicle shall be on duty or operate a commercial motor vehicle while in the immediate possession of an intoxicating beverage or controlled substance, regardless of its content. This prohibition does not apply to possession of an intoxication beverage which is manifested and transported as part of a shipment by a commercial motor vehicle.

B. No motor carrier shall require or permit an operator of a commercial motor vehicle to violate any provision of this Section or any regulation prohibiting the consumption, possession or use of intoxicating beverages or controlled substances, nor shall said motor carrier allow any operator of a commercial motor vehicle to be on duty or to operate a motor vehicle if by his general appearance or by his conduct or by other substantiating evidence said operator appears to have consumed an intoxicating beverage or controlled substance within the preceding four hours.

1. Any driver or operator who is found to be in violation of the provisions of this Section shall be placed out-of-service for a period of not less than 24 hours.

2. Said 24-hour out-of-service period will commence upon issuance of an out-of-service order.

3. No driver of a commercial motor vehicle shall violate the terms of an out-of-service order issued under this

Section and said operator shall report the issuance of out-of-service order to his employer within 24 hours of said issuance.

4. The act of operating a commercial motor vehicle on the public highways and roads of the state of Louisiana shall constitute implied consent of said operator to be tested for any trace of alcohol or controlled substances.

a. An operator of a commercial motor vehicle suspected to have consumed or be under the influence of an alcoholic beverage or controlled substance shall be tested by the methods approved by the Department of Public Safety and Corrections pursuant to R.S. 32:663 et seq., and the regulations promulgated thereunder.

b. Any operator of a commercial motor vehicle who has been determined to have consumed or be under the influence of an alcoholic beverage or controlled substance while operating a commercial motor vehicle or within the time limits prescribed by this Section prior to operating a commercial motor vehicle shall be subject to the penalties and disqualifications set forth in R.S. 32:401 et seq., and the regulations promulgated thereunder.

AUTHORITY NOTE: Promulgated in accordance with R.S. 32:408.

HISTORICAL NOTE: Filed by the Department of Public Safety, Office of Motor Vehicle, 1974, promulgated and amended by the Department of Public Safety and Corrections, Office of Motor Vehicles, LR 15:1093 (December 1989), amended LR 24:2314 (December 1998).

§117. Third-Party Testers

A. All persons or entities desiring certification as third-party testers shall apply for certified third-party tester status on a form prepared and furnished by the Department of Public Safety and Corrections, Office of Motor Vehicles and shall furnish all requested information contained thereon and all necessary documentation requested. In order to qualify for a certified third-party tester status an applicant must, at a minimum, meet the following qualifications:

1. maintain a place of business in the state of Louisiana which operates from a permanent and regularly occupied structure which is safe and meets all requirements of federal, state or local law;

2. maintain at least one full-time certified third-party examiner on its payroll;

3. agree to maintain at each approved third-party testing site or place of business for a minimum of five years all records of each driver-applicant for whom third-party tester has conduced any skills testing, whether or not said driver-applicant passes or fails any such testing;

4. agree to further maintain at each approved third-party testing site or place of business for a minimum of five years a record of each certified third-party examiner in the employ of the third-party tester;

5. for purposes of this Section, the five-year period specified for maintaining driver-applicant records runs from the date of the test and said period related to third-party examiners is to commence on the date the third-party examiner leaves the employ of third-party tester;

6. applicants that are not proprietary schools or educational institutions shall employ at least 15 licensed commercial drivers on a full or part-time basis;

7. all applicants must have been in operation in the state of Louisiana for a minimum period of two years prior to the date of application for certified third-party testing status;

8. have currently established a commercial motor vehicle training program;

9. agree to enter into a third-party tester agreement with the Department of Public Safety and Corrections, Office of Motor Vehicles setting forth the responsibilities and any additional requirements for certified third-party tester status;

10. have a basic control skills' test course and road test route approved by the department.

11. All CDL third-party testers shall execute a good and sufficient surety bond with a surety company qualified to do business in Louisiana as surety, in the sum of $10,000. The bond shall name The Department of Public Safety and Corrections, Office of Motor Vehicles, as oblige. The bond shall remain in effect throughout the duration of the contract.

12. The CDL third-party tester shall require its examiners to annually submit to a fingerprint background check as part of the examiner application process. The third-party tester or the examiners employed by the tester shall pay any fees charged in connection with the fingerprint background check as may be agreed between the tester and the examiner. Any fees for fingerprinting or doing the background check are paid to the respective law enforcement agencies providing the service.

13. The CDL third-party tester shall not charge a fee in excess of $100 for the administration of a skills test. The third-party test shall clearly indicate in writing that this fee is for the administration of the skills test.

B. All applicants for certified third-party tester status shall submit with their application an application fee of $50, which fee is nonrefundable. All certificates of certified third-party tester status shall be valid for a period of one year from the date of issuance.

C.1. All applicants for certification as third-party testers, as well as all persons certified as third-party testers, shall permit an employee or other representative of the department to monitor or audit the applicant's or third-party tester's records or skills testing operations during the hours of 8 a.m.-4:30 p.m. Monday-Friday, or at any other time the third-party tester is normally open for business or an examiner employed by the third-party tester is administering knowledge or skills tests for endorsements to a commercial driver's license. The applicant or third-party tester, including any of its employees, officers, or directors, shall immediately make available, to the employee or representative of the department conducting the audit, the

records required to be kept by LAC 55, Part III, Chapter 1, Subchapter A, or the third-party tester agreement unless the applicant or third-party tester certifies, in writing, that the records sought are in use at that time, in which case the records shall be made available by 4:30 p.m. on the following day.

2. The failure to provide the records sought to be audited pursuant to §117 may serve as grounds to revoke the status of the third-party tester or third-party examiner, or as grounds to deny the certification if such status is the subject of a new or renewal application with the department.

3. The applicant or third-party tester and third-party examiner shall permit the removal of the records by the employee or representative of the department conducting the audit unless the employee or representative of the department determines that acceptable copies are made available by the applicant or third-party tester.

4. The applicant or third-party examiner and third-party tester shall permit an employee or other representative of the department to conduct an inspection of the applicant's or third-party tester's premises during the hours of 8 a.m. through 4:30 p.m. Monday through Friday, or at any other time the third-party tester is normally open for business or an examiner employed by the third-party tester is administering knowledge and skills tests for endorsements to a commercial driver's license.

AUTHORITY NOTE: Promulgated in accordance with R.S. 32:408.

HISTORICAL NOTE: Filed by the Department of Public Safety, Office of Motor Vehicle, 1974, promulgated and amended by the Department of Public Safety and Corrections, Office of Motor Vehicles, LR 15:1093 (December 1989), amended LR 24:2314 (December 1998), LR 39:2511 (September 2013), LR 40:91 (January 2014).

§118. Administrative Actions

A. The department may suspend, revoke or cancel any certification, agreement, license, or permit granting the status of a third-party tester or third-party examiner for any violation of R.S. 32:401 et seq., LAC 55, Part III, Chapter 1, or the agreement signed by the third-party tester or third party examiner. Additionally, the department may impose a fine or other sanction for violation of R.S. 32:401 et seq., or LAC 55, Part III, Chapter 1, or the agreement signed by the third party examiner or third party tester.

B. The department shall deny any application, including any renewal application, for an agreement and a certification, as a third-party tester or third-party examiner if the applicant does not posses the qualification contained in R.S. 32:408.1 and LAC 55, Part III, Chapter 1. The department may also deny any renewal application if the department determines that the applicant has not administered skills test in accordance with the law and the agreement between the parties.

C. Any request for an administrative hearing to review the suspension, revocation or cancellation of any certification, license, or permit issued pursuant to R.S. 32:408.1 or LAC 55, Part III, Chapter 1, any other action, order or decision of the department regarding a third-party tester or a third-party examiner shall be in writing and received by the department within thirty days of the date the notice was mailed or hand delivered as the case may be.

D. Since the agreement between the parties is subject to contract law, and is not an order or decision for purposes of administrative law, no administrative hearing shall be granted in connection with the denial of an application for a new or renewal application to be certified as a third-party tester or third party examiner.

AUTHORITY NOTE: Promulgated in accordance with R.S. 32:408.

HISTORICAL NOTE: Promulgated by the Department of Public Safety and Corrections, Office of Motor Vehicles, LR 24:2315 (December 1998), amended LR 26:1632 (August 2000).

§119. Third-Party Examiners

A. All persons desiring to obtain certified third-party examiner status shall make application to the Department of Public Safety and Corrections, Office of Motor Vehicles on a form prepared and approved by the department, and shall furnish all requested information thereon. In order to obtain certified third-party examiner status, an applicant must, at a minimum, meet the following qualifications:

1. hold a current and valid commercial driver's license for all commercial driver's license classes for which the applicant seeks examiner status, issued either by the state of Louisiana or by a state whose commercial driver's license criteria meets the requirements of the *Code of Federal Regulations* relative to commercial driver's licenses;

2. be employed on a full-time basis by an employer who is a certified third-party tester;

3. has successfully completed an approved third-party examiner training course;

4. applicant must have taken and successfully passed a commercial driver's license written examination;

5. applicant must have no violations, except parking violations, within one year prior to the date of application relative to a commercial motor vehicle or its operation;

6. applicant must have had no convictions, guilty pleas or forfeitures for driving under the influence of alcohol or any controlled dangerous substance in any class of vehicle within three years prior to the date of application;

7. applicant must have had no license suspensions, revocations, cancellations or disqualifications in any class of vehicle within three years prior to the date of application;

8. applicant must be at least 21 years of age;

9. applicant must at least have a high school diploma or equivalent education;

10. must maintain a valid email account and have access to the internet, to interact with certain online systems.

B. All applicants for certified third-party examiner status who currently hold a certificate of third-party examiner from a state other than Louisiana shall make application to the

department for a certified third-party examiner status and shall meet all of the requirements in §119.A. Additionally, all third-party examiners shall take a skills test from either a departmental examiner or an approved third-party examiner upon the renewal of the commercial driver's license of said applicant for the classes of vehicles for which he is applying to be a third-party examiner.

C. All certificates of certified third-party examiner status shall be valid for a period of one year from the date of issuance. All applications for certified third-party examiners must be accompanied by an application fee of $10 which is nonrefundable.

D. All third-party examiners shall utilize in their evaluation of the skills of individual applicants for commercial driver's licenses and the endorsements thereto, the commercial driver's license road test criteria and protocol formulated by Essex Corporation for the National Driver's License Examiner's Training Program.

AUTHORITY NOTE: Promulgated in accordance with R.S. 32:408 and 15.587.

HISTORICAL NOTE: Filed by the Department of Public Safety, Office of Motor Vehicle, 1974, promulgated and amended by the Department of Public Safety and Corrections, Office of Motor Vehicles, LR 15:1094 (December 1989), amended LR 24:2315 (December 1998), LR 40:91 (January 2014).

§121. State Examiners

A. In order to achieve the highest possible standards of consistency and reliability, all commercial driver's license examiners employed on a full-time basis by the Department of Public Safety and Corrections, Office of Motor Vehicles, must, at a minimum, meet the following qualifications:

1. hold a current and valid commercial driver's license issued by the state of Louisiana for all commercial driver's license classes for which the applicant seeks examiner status, if said examiner is to conduct skills testing;

2. have successfully completed the commercial driver's license examiner training course of the National Commercial Driver's License Training Program or successfully complete a commercial driver's license training course of instruction by the Department of Public Safety and Corrections, Office of Motor Vehicle, and present satisfactory certification of same;

3. applicant must have taken and successfully passed a commercial driver's license written examination, if said examiner is to conduct skills testing;

4. applicant must have no violations, except parking violations, within one year prior to the date of application relative to a commercial motor vehicle or its operation;

5. applicant must have had no convictions, guilty pleas or forfeitures for diving under the influence of alcohol or any controlled dangerous substance in any class of vehicle within three years prior to the date of application;

6. applicant must be at least 21 years of age;

7. applicant must have had no license suspensions, revocations, cancellations, or disqualifications in any class of vehicle within three years prior to the date of application;

8. applicant must have at least a high school diploma or equivalent education.

B. Additionally, all commercial driver's license examiners employed on a full-time basis by the Department of Public Safety and Corrections, Office of Motor Vehicles must take a skills test from a departmental examiner prior to being certified as a state commercial driver's license examiner. All state commercial driver's license examiners shall utilize in their evaluation of the skills of individual applicants for commercial driver's licenses and the endorsement thereto, the commercial driver's license road test criteria and protocol formulated by ESSEX Corporation for the National Commercial Driver's License Examiner's Training Program. All state commercial driver's license examiners shall periodically examine and compare skills test data resulting from the skills test administered by each examiner for purposes of aiding consistency, uniformity and reliability of skills testing.

AUTHORITY NOTE: Promulgated in accordance with R.S. 32:408.

HISTORICAL NOTE: Filed by the Department of Public Safety, Office of Motor Vehicles, 1974, promulgated and amended by the Department of Public Safety and Corrections, Office of Motor Vehicles, LR 15:1094 (December 1989).

§123. Enforcement

A. Commencing April 1, 1990 enforcement of all of the requirements and provisions of the Commercial Driver's License Law (R.S. 32:401 et seq.) shall begin by the Department of Public Safety and Corrections, Office of Motor Vehicles. This date is necessitated by the administrative requirements of said law and the limitations of the Commercial Driver's License Information System. All violations of the Commercial Driver's License Law shall become part of all license holders' driving records on the above date.

AUTHORITY NOTE: Promulgated in accordance with R.S. 32:408.

HISTORICAL NOTE: Filed by the Department of Public Safety, Office of Motor Vehicles, 1974, promulgated and amended by the Department of Public Safety and Corrections, Office of Motor Vehicles, LR 15:1094 (December 1989).

§125. Basic Maneuvers

A. The following specified basic maneuvers shall be required to be performed by an applicant for a Class A, B, or C commercial driver's license during the administration of the skills' test. These maneuvers shall be required to be performed in a vehicle of the same class as the license being sought by the applicant.

1. Applicant must perform at least four right and four left turns.

2. Applicant must successfully demonstrate safe and correct operation of the vehicle by performing two intersection stops and two intersection drive-throughs.

3. Applicant must perform the required maneuvers while negotiating 1 1/2 to 2 miles each of rural roads and urban streets.

4. Applicant shall successfully demonstrate safe and correct operation of the vehicle while traversing at least one simulated railroad crossing or one actual railroad crossing.

5. The basic maneuvers to be performed shall include at least one curve.

6. The basic maneuvers to be performed shall include at least one each of an expressway merge and exit, if the same is available in the testing area.

7. Applicant should perform one each of an actual or simulated drive up and down a grade, if same is available in the testing area.

8. Applicant should negotiate at least one overpass.

9. Applicant should successfully demonstrate safe and correct operation of the vehicle while performing at least one each of a stop and start on an actual or simulated grade.

10. Applicant will be graded on skills demonstrated in use of the clutch of the commercial motor vehicle, as well as use of the transmission gears, brakes, steering, obeying of traffic signals and signs and proper lane usage.

AUTHORITY NOTE: Promulgated in accordance with R.S. 32:408.

HISTORICAL NOTE: Filed by the Department of Public Safety, Office of Motor Vehicle, 1974, promulgated and amended by the Department of Public Safety and Corrections, Office of Motor Vehicles, LR 15:1095 (December 1989), amended LR 24:2315 (December 1998).

§127. Retesting Fees

A. Each person who takes a second or subsequent test, whether written or driving, administered by the Office of Motor Vehicles in connection with an application for the issuance or renewal of a driver's license, shall pay a nonrefundable fee of $10.

AUTHORITY NOTE: Promulgated in accordance with R.S. 32:412(H).

HISTORICAL NOTE: Promulgated by the Department of Public Safety and Corrections, Office of Motor Vehicles, LR 20:1128 (October 1994).

§129. Renewal by Mail

A. The department shall send an invitation to each person qualified to renew his Class "D" or "E" driver's license by mail. This invitation shall be mailed to the last known address of the qualified person 100 days prior to the expiration of the person's driver's license.

AUTHORITY NOTE: Promulgated in accordance with R.S. 32:412(D).

HISTORICAL NOTE: Promulgated by the Department of Public Safety and Corrections, Office of Motor Vehicles, LR 21:182 (February 1995), amended LR 24:2315 (December 1998).

§131. Disqualifications for Mail Renewal Applicants

A. A person is not qualified to renew his driver's license by mail if the individual's driving record indicates that, within two years preceding the date of application, the individual has been convicted of the following moving violations:

1. failure to render aid;
2. hit and run;
3. reckless driving;
4. speeding;
5. improper passing;
6. making improper turn;
7. improper lane changing;
8. failure to yield;
9. failure to signal;
10. careless driving;
11. negligent injury;
12. following too closely;
13. failure to dim headlights;
14. failure to leave sufficient distance;
15. following emergency vehicle unlawfully;
16. failure to keep in proper lane;
17. improper entry to/exit from traffic;
18. improper starting from parked position;
19. improper backing;
20. crossing fire hose;
21. passing on wrong side;
22. passing in a no passing zone;
23. failure to yield to passing vehicle;
24. coasting with gears disengaged;
25. failure to yield to emergency vehicle;
26. failure to yield to unsigned intersection;
27. failure to yield to pedestrians;
28. failure to follow officer's instruction;
29. passing through barricade;
30. failure to observe safety zone;
31. drag racing;
32. general speeding or too fast for conditions;
33. speed less than posted minimum;
34. making right turn from left lane;
35. making left turn from right lane;
36. driving without proper driver's license;
37. wrong way on one way street;

38. driving on wrong side of road;

39. driving wrong direction on rotary;

40. leaving the scene of an accident;

41. evading citation or roadblock;

42. failure to maintain control;

43. driving without headlights.

B. The above cited convictions are in addition to those disqualifying convictions enumerated in R.S. 32:414.

AUTHORITY NOTE: Promulgated in accordance with R.S. 32:412(D).
HISTORICAL NOTE: Promulgated by the Department of Public Safety and Corrections, Office of Motor Vehicles, LR 21:183 (February 1995), amended LR 24:2315 (December 1998).

§133. Further Disqualifications

A. A person shall not be qualified to renew his driver's license by mail if:

1. the applicant is 70 years of age or older prior to 100 days before the expiration of the driver's license;

2. the applicant indicates on the mail-in renewal application form that there have been changes or additions since that last renewal including any physical condition, or vision change which does not meet departmental standards;

3. if the applicant's driving record indicates a pending suspension, or pickup order for the license has been issued, or the record has a notation of "no insurance" or "petition".

AUTHORITY NOTE: Promulgated in accordance with R.S. 32:412(D).
HISTORICAL NOTE: Promulgated by the Department of Public Safety and Corrections, Office of Motor Vehicles, LR 21:183 (February 1995), amended LR 24:2315 (December 1998).

§135. Renewal by Electronic Commerce

A. In addition to renewing a class "D" or "E" driver's license by mail, an individual who has received an invitation to renew pursuant to LAC 55, Part, III, Chapter 1, §129 may choose to renew his or her driver's license by contacting the department via the Internet or by telephone.

B. Prior to initiating the renewal process via the Internet or by telephone, the individual shall be required by the department to provide information verifying the individual's identity including the individual's license number, the individual's date of birth, and the date the individual's license expires.

C. Any individual who chooses to renew his or her driver's license by electronic commerce shall be required to give express consent to any disclosure of personal information over the Internet that may be necessary in order to complete the renewal process. This consent shall be obtained by any means appropriate based upon the method chosen to renew the license.

E. Notwithstanding any other provision of LAC 55, Part III, Chapter 1 to the contrary, a class "D" or "E" driver's license which has been expired for a period of six months or less may be renewed by mail or electronic commerce upon the payment of the special late fee specified in R.S. 32:412(D)(3)(d).

F. Except as otherwise provided in §135, the rules governing renewal of class "D" or "E" driver's licenses by mail shall apply to renewals by electronic commerce.

G. All money submitted with an application to renew a class "D" or "E" driver's license by mail shall be in the form of a personal check with the applicant's name and address preprinted on the check, a money order, a cashier's check, or a certified check.

H. All fees due in connection the renewal of a class "D" or "E" driver's license by electronic commerce shall be paid using an approved credit card in accordance with applicable law.

AUTHORITY NOTE: Promulgated in accordance with R.S. 32:412(D).
HISTORICAL NOTE: Promulgated by the Department of Public Safety and Corrections, Office of Motor Vehicles, LR 26:1632 (August 2000).

§137. Renewal Stickers

A. Upon receipt of an application which complies with the requirements set out by law and rule, the Office of Motor Vehicles will issue a renewal sticker to be affixed to the side of the license containing the Restriction and Endorsement Code. Applicants who apply for renewal and who fail to receive a sticker within 35 days of application must contact the Office of Motor Vehicles either in writing or in person within 60 days from the date of license expiration to qualify for a free replacement sticker or free retake of the pictured license. If the applicant does not contact the department by the sixtieth day, he will be required to pay for a duplicate license or sticker at a cost of $5 plus a $5.50 handling fee. These written requests are to be directed to the Vehicle Renewal Unit, P.O. Box 64886, Baton Rouge, LA 70896.

AUTHORITY NOTE: Promulgated in accordance with R.S. 32:412(D).
HISTORICAL NOTE: Promulgated by the Department of Public Safety and Corrections, Office of Motor Vehicles, LR 21:183 (February 1995).

§143. Commercial Driving Schools

A. Definitions. As used in this Chapter, the following terms have the meanings described below.

30-Hour Classroom Course—a program which shall consist of a course of not less than 30 hours of classroom instruction required of first-time driver's license applicants' age 15 through 17 excluding lunch breaks. This course shall be conducted utilizing the curriculum contained in this Subchapter.

Adult—a person 18 years of age or older.

Background Check—a secure and reliable way to initiate a criminal check on potential owners, instructors, employees and other types of applicants.

Eight-Hour behind the Wheel Course Assessment—a program which shall consist of a minimum of eight hours of

instruction with the student as the operator of a dual-controlled motor vehicle. If under the age of 18, the student's parent or guardian may sign, authorizing the instruction. A test is conducted or given at the end of the eight hour driver education course to determine a student's driving ability.

Behind-the-Wheel Instruction—a course which shall consist of a minimum of eight hours of instruction with a student as the operator of a dual-controlled motor vehicle. The course is also referred to as BTW.

Classroom Instruction—a driver education course that is administered in a classroom environment that enables a student to learn through various instructional methods, under the direct guidance of a properly licensed driver education instructor.

Commissioner—the assistant secretary of the Department of Public Safety and Corrections, Public Safety Services, Office of Motor Vehicles.

DPS—the Louisiana Department of Public Safety and Corrections, Public Safety Services, acting directly or through its duly authorized officers and representatives.

Driver Education Certificate of Completion—proof of completion of any portion of the driver education course or the pre-licensing course required by law. The course is administered by a certified and approved driving school in the form designated by the DPS.

Driver Education Course—a formal class or program that prepares a new driver to obtain a learner's permit or driver's license. The course of study may be administered in a classroom, in a vehicle, online or a combination thereof. Individuals are instructed on the techniques of driving a vehicle, safety precautions and traffic regulations and laws.

Driver Educational Instructional Document—a document issued by the driving school on a form approved and provided by DPS. Driving instruction details, behind-the-wheel assessment and other information will be documented on this form.

Driving School—an entity licensed by DPS that offers instruction for the purpose of educating and training an individual, by offering a 38-hour driving course or a 14-hour pre-licensing course, or both.

Eight-Hour Behind-the-Wheel Course Assessment—a program which shall consist of a minimum of eight hours of instruction with the student as the operator of a dual-controlled motor vehicle. If under the age of 18, the student's parent or guardian shall sign, authorizing the instruction. A test is conducted or given at the end of the eight-hour driver education course to determine a student's driving ability.

Fees—the monetary amount for a school license, tester license or instructor license. All fees shall be submitted in the form of a money order, certified check or secondary school system checks.

Instructor—a person who is licensed to provide the driver education curriculum through classroom or behind-the-wheel instruction.

Instructor License—a license issued by DPS that authorizes the holder of the license to provide instruction in driver education courses.

Knowledge Test—final test for the driver education and pre-licensing classroom courses. This test is provided to the driving school by the Office of Motor Vehicles.

Letter of Warning—identification of a violation. The letter will provide that the violation must be corrected and may provide directions and a timeframe of the plans for the suggested corrections.

Major Offense—an infraction of major regulations and policies outlined within this Chapter, which may include but not be limited to, driving schools not adhering to all applicable federal and state laws or engaging in any form of unlawful discrimination or other activities. The commissioner maintains discretion to determine any violations which will amount to a major offense and any monetary penalty to be assessed.

Minor—a person under the age of 18.

Minor Offense—an infraction of minor regulations and policies outlined within this Chapter, which may include but not be limited to, failure to notify students of grievance procedures, accompanying students to OMV with the purpose of assisting the student in completion of the driver's license exam, failure to display the driving school license at the place of business, failure to maintain lesson plans and schedules for the driving school. The commissioner maintains discretion to determine any violations which will amount to a minor offense and any monetary penalty to be assessed.

Motor Vehicle—automobiles, trucks, truck-tractors, trailers and semi-trailers and motorcycles, propelled by steam, gasoline, electricity, or any other source of energy other than muscular power, except farm implements temporarily operated or moved on a roadway or vehicles operated only on rails or tracks constructed therefor.

OMV—any reference herein to OMV shall be construed as referring to the Office of Motor Vehicles, Training and Certification Unit, P.O. Box 64886, Baton Rouge, LA 70896.

Operator—every person who is in actual physical control of a motor vehicle upon a roadway.

Owner—a person or provider who has the principle responsibility for a driver education program.

Penalty—monetary assessment for violation of prohibited activities and procedures outlined in this Chapter. Fine amounts will be based on the nature of the offense, the number of previous offenses, the number of rules violated and the number of times the violations occurred and will be determined by the commissioner. Any penalty assessed shall be between $100 and $1,500 per violation.

Person—every natural person, firm, co-partnership, association or corporation.

Pre-Licensing Course—a program which shall consist of six hours of classroom instruction and an eight hour behind-the-wheel course required of first-time driver's license applicants 18 years of age or above, if a 30-hour classroom course is not completed.

Revocation—termination of license to operate a driving school or to instruct at a driving school as provided in these rules and regulations.

Road Skills Test—a driving test that demonstrates the applicant's ability to safely operate and maneuver a vehicle in traffic.

School License—a license issued by DPS authorizing the holder of the license to provide driver education courses.

Secretary—the deputy secretary of the Department of Public Safety and Corrections, Public Safety Services, or his appointed designee.

Street or *Roadway*—the entire width between the boundary lines of every publicly maintained thoroughfare when any part thereof is open to the use of the public for purposes of vehicular travel.

Student—a person who is enrolled or seeking enrollment in a driver education course or a pre-licensing course.

Supervision—the action or process of watching or directing what someone does or how something is done, or both.

Suspension—the temporary withdrawal of a school or instructor's license for violations of the laws and rules pertaining to driver's education, or both.

Teaching Certificate—a certificate issued by the Louisiana Department of Education indicating the holder is qualified to teach in the secondary schools of this state.

Temporary Instructional Permit—a Class "E" temporary instructional permit (TIP) obtained from OMV prior to the administration of the knowledge test to the student, operating a motor vehicle during on-road skills instruction or to be administered a road skills test.

Third-Party Examiner—an individual who has been licensed to administer road skills test through a third-party tester.

Third-Party Tester—for purposes of this Chapter, a driving school with which DPS has perfected a contract with to administer knowledge and road skills tests required by Louisiana law for driver's license issuance.

AUTHORITY NOTE: Promulgated in accordance with R.S. 32:402.1(A)(1) and R.S. 40:1461.

HISTORICAL NOTE: Promulgated by the Department of Public Safety and Corrections, Office of Motor Vehicles, LR 38:1974 (August 2012), amended LR 38:3234 (December 2012), LR 43:1759 (September 2017), LR 45:1602 (November 2019).

§144. Driver Education and Driving Schools

A. DPS shall establish a driver education and training program to be utilized by secondary school systems and private driving schools of this state. A driver education course for any person under the age of 18 shall consist of a minimum of 30 hours of classroom instruction and no less than 8 hours of actual driving instruction.

B. Any application received and approved for a driving school will be issued a license that provides for the administration of a 38-hour driver's education course, a 6-hour pre-licensing course, and the administration of written and road skills test as a third-party tester. Any DPS approved driving school licensed to only offer the 6-hour pre-licensing course as of August 15, 2011, will be licensed to continue to offer only the 6-hour pre-licensing course, but will be required to become a third-party tester, and is responsible for complying with the new requirements set forth in these rules. No other applications for only providing the 6-hour pre-licensing course will be accepted. A pre-licensing course shall consist of a minimum of 6 hours of classroom instruction and no less than 8 hours of actual driving instruction.

C. Every person licensed or contracted by DPS to operate a private driving training school or agency, or providing driving courses, shall also be licensed or contracted as a third-party tester pursuant to R.S. 40:1461.

D. Every person engaged in the operation of a private driving school shall apply for and procure a license from DPS. No driving school shall advertise without having first obtained a contract with DPS. No person shall for remuneration hold himself as a qualified or licensed instruction without obtaining a license and contract from DPS.

E. Every licensed and contracted third-party tester shall administer both the knowledge and road skills tests required for the issuance of a class "D" or "E' license in Louisiana in accordance with R.S. 32:408.

AUTHORITY NOTE: Promulgated in accordance with R.S. 32:402.1(A)(1) and R.S. 40:1461.

HISTORICAL NOTE: Promulgated by the Department of Public Safety and Corrections, Office of Motor Vehicles, LR 38:1975 (August 2012), amended LR 43:1761 (September 2017), LR 45:1602 (November 2019).

§145. Qualifications for Private Driving School Owners and Instructors

A. Qualifications for a Private Driving School Owner. To become a driving school owner, the applicant shall:

1. be a citizen of the United States or be lawfully present in the United States, and be a resident of the state of Louisiana;

2. be at least 21 years of age and have at least 5 years of full licensure driving experience;

3. hold at least a valid class "E" Louisiana driver's license;

4. have earned at least a high school diploma or GED;

5. not have had driving privileges suspended/disqualified for a DUI/DWI within the last 10 years;

6. possess any required occupational license and business license;

7. within the last three years, not have any of the convictions listed below:

a. three or more moving violations on the driving record;

b. driving under suspension;

c. two or more citations for seatbelt violations;

d. two or more citations for following too closely;

e. one or more citations for child restraint violations;

f. three or more exceeding the posted speed limit;

g. one or more citations for texting while driving;

h. two or more citations for driving without insurance or security within three years; or,

i. two or more citations for reckless or careless operation or careless driving;

8. not have three or more insurance cancellations within the last 12 months on his driving record;

9. not have been convicted of any offenses related to the operation of a driving school or other business regulated by DPS;

10. not a current or previous owner of a driving school or any other business regulated by DPS whose license or contract has been revoked;

11. not have been convicted of a crime involving violence, dishonesty, deceit, indecency or an offense involving moral turpitude, and have not been convicted of any misdemeanor or felony offenses involving controlled dangerous substance(s) or driving while intoxicated within the last 10 years;

12. not be convicted of any crime enumerated in R.S. 15:587.1(C) (the Child Protection Act), R.S. 15:587.1 et seq.;

13. has not provided false information with the application or falsified or withheld documents or information from representatives of DPS;

14. attend and complete the training course for school owners provided by DPS. The applicant must pass a test on his knowledge of LAC 55:III.143-160;

15. maintain a valid email address for correspondence sent electronically from DPS; and

16. submit a completed application package as outlined in this Subchapter.

B. Qualifications for Classroom Instructor. In addition to meeting the qualifications of a driving school owner (with the exception of Paragraphs 14-15 above), a classroom instructor applicant shall:

1. not previously have been a licensed instructor whose instructor's license has been suspended or revoked;

2. hold a 30-hour driver education course certificate of completion issued within the past five years or a valid teaching certificate from the Department of Education with the following specialized education courses:

a. hold a current valid teaching certificate issued within the past five years with all of the following specialized education courses:

i. general safety education course—three hours;

ii. basic information course in driver education course—three hours;

iii. curriculum innovations and instructional devices course (three hours) in-depth study of driver education and traffic safety curricular materials and familiarization with related instructional devices; and

iv. first aid—one hour; or

b. a certificate of completion of a driver education course at least equivalent to a 30-hour classroom course which has been approved by DPS;

3. at the time of application, within the last three years, shall not have any convictions listed in §145.A.7-8;

4. have at least five years driving experience;

5. possess a current completed medical examination form (DPS 2032).

C. Qualifications for Eight-Hour Behind-the-Wheel Instructor. In addition to meeting the qualifications of a driving school owner (with the exception of Paragraphs 14-15 in §145.A), an eight-hour behind-the-wheel instructor shall:

1. meet the qualifications of a classroom instructor;

2. hold at least a valid class "D" Louisiana chauffeur's license;

3. not be missing an eye, hand or foot; and

4. have visual acuity not worse than 20/40 in each eye, with or without corrective lenses and not have any restrictions which indicate less than 20/40 vision or has physical impairment restrictions on his driver's license.

D. All instructors shall be approved by DPS and obtain an instructor's license prior to providing instruction.

AUTHORITY NOTE: Promulgated in accordance with R.S. 32:402.1(A)(1) and R.S. 40:1461.

HISTORICAL NOTE: Promulgated by the Department of Public Safety and Corrections, Office of Motor Vehicles, LR 38:1975 (August 2012), amended LR 43:1761 (September 2017), LR 45:1602 (November 2019).

§146. Application Process and Fees for Private Driving Schools and Instructors

A. Application Process for Initial Driving School License. The application process is a two-step approval process.

1. An applicant for an initial driving school license shall submit the following:

a. completed initial application for driving school owner approval (DPSMV6710);

b. non-refundable $50 certified check or money order made payable to DPS;

c. completed criminal history background check forms for each owner, including two fingerprint cards along with separate certified check or money order made payable to Department of Public Safety and Corrections, for each background check to be conducted;

d. lesson plan containing:

i. beginning and ending time of each class day, including lunch and break periods;

ii. number of class days in the course;

iii. material sources;

iv. how information is presented (i.e. handouts, videos, lectures);

v. title of audio visual sources to be utilized; and

vi. current e-mail address.

2. Once the background check is completed and the initial application is approved, the applicant shall submit the following:

a. completed driving school initial application (DPSMV 2147). This form is furnished by OMV and shall be signed by the owner and notarized;

b. copy of any required occupational and business license(s);

c. completed background check forms on any other employees responsible for the supervision of students;

d. certificate of insurance in the company name stating that all vehicles utilized in the behind-the-wheel course are currently insured and that upon cancellation or expiration, DPS will be notified. This certificate shall be from the issuing insurance carrier, not the agency; identify (by description and vehicle identification number) the vehicle(s) covered. The limits shall be from a company authorized to do business in this state in the amount of at least the minimum amount required by R.S. 32:900;

e. address of and specification of classrooms utilized to conduct the classroom course, including room size and capacity as determined by the state fire marshal or local authority;

f. completed driving school instructor application package for each instructor;

g. course specifications as defined in this Subchapter;

h. copies of unit tests and final examination;

i. lesson plan for the behind-the-wheel course which outlines the stages of the course based on the student's progression and specifies the types of roads traveled, the traffic signals and signs encountered on the routes taken, and the average time frame students are exposed to various types of roads. Written documentation or GPS mapping may be included;

j. completed application package for third-party tester certification;

k. a surety bond in the amount of $20,000; and

l. a written document between the student and school, as defined in LAC 55:III.147.B.3.

B. All applications for driving schools and instructors must be mailed to:

Office of Motor Vehicles
Attention: Training and Certification Unit
P.O. Box 64886
Baton Rouge, LA 70896

C. Application for Instructor License for a Driving School

1. An applicant shall submit:

a. an application for instructor of a driving school (DPSMV 2148);

b. a completed background check document (DPSSP 6696) and background check fee;

c. a 30-hour driver education training certificate of completion or valid teaching certificate as defined in §145.B;

d. a copy of a high school diploma, GED or higher education certificate;

e. an application fee of $20 for a two-year period which shall be non-refundable;

f. a completed third-party examiner package as outlined in §156 if the instructor is applying to be a third-party examiner.

D. Licenses

1. Licenses shall be issued on a biennial basis. The initial license shall be valid from the date of issuance until December 31 of the following even-numbered calendar year.

2. Licenses shall be nontransferable. In the event of a change of ownership, application for a new license shall be made and the old license shall be surrendered to DPS before a new license will be issued to the new owner.

3. If a driving school license is lost or destroyed, a duplicate shall be issued for a $25 application fee upon receipt of a statement of fact or, in the case of mutilation, upon surrender of such license.

4. If an instructor license is lost or destroyed, a duplicate shall be issued for a $10 application fee upon receipt of a statement of fact or, in the case of mutilation, upon surrender of such license.

E. School/Tester License Fees

1. Every application or renewal for a school license shall be accompanied by an application fee or renewal fee of $25 per year, collected biennially, per location.

2. A $25 fee shall be assessed when a school relocates and a new license is issued or if a duplicate license is required.

3. The license fee for an additional location is $25 per year, collected biennially, and shall be submitted with the new application.

4. Every application or renewal for a third-party tester license shall be accompanied by an application fee or renewal fee of $50 per year, collected biennially, per location.

5. License fees pursuant to this Section may be prorated.

F. Instructor/Examiner License Fees

1. Every application or an instructor license shall be accompanied by an application fee or renewal fee of $10 per year, collected biennially, or if a duplicate license is required.

2. Every application for an examiner license shall be accompanied by an application fee or renewal fee of $25 per year, collected biennially, or if a duplicate license is required.

3. License fees pursuant to this Section may be prorated.

G. Office Staff

1. Every employee involved in the supervision over the students or who has access to student information shall have a background check performed.

2. School owners may employ persons who have not passed a background check for other duties that do not involve access to, care of, or supervision of students and/or minors. These employees will not have access to the records or information of students and/or minors at any time. Furthermore, these employees may not be allowed on the premises of a driving school while students and/or minors are present. In the case of a driving school that has a shared business, these employees shall not be in the same room at any time with students and/or minors, or have access to the records or information of students and/or minors.

H. Renewal

1. Prior to the beginning of the renewal period, a renewal invitation will be offered to eligible schools by email. Previous compliance reviews will determine eligibility.

2. Application for renewal shall be made on the form prescribed by OMV at a minimum of 120 days prior to license expiration.

3. All renewal applications for privately-owned schools shall be submitted to OMV before the close of business on October 1 of the expiration year.

4. Applications received after October 1 will be deemed untimely and may cause delay in renewal of the license.

5. A school that submitted an untimely renewal application and whose renewed license is not issued prior to December 31, shall not be authorized to conduct any classes after December 31, until the license is renewed.

6. Incomplete renewal applications will be returned and may result in a delay of the licensing process.

7. Proof of continuing education for each instructor shall be submitted with the renewal packet as outlined in §151.

8. The following documents shall be submitted as part of the renewal packet:

a. completed application for each school location, indicating the instructors and vehicles utilized at each location;

b. completed application packet for any new instructors added;

c. certificate of insurance in the school's name stating that all vehicles utilized in the behind-the-wheel course are currently insured and that upon cancellation or expiration, DPS will be notified. The certificate shall be from the issuing insurance carrier and not the agency and identify (by description and vehicle identification number) the vehicle(s) covered. The limits shall be from a company authorized to business in Louisiana for at least the minimum amount required by R.S. 32:900;

d. appropriate fees as outlined in §146.E or F; and

e. successful passing of an initial fingerprint background check for each owner, instructor and any other employee involved in the supervision of the students or who has access to student information.

I. Change of Name of Driving School

1. If the school desires to change the operating name of the business, the owner shall submit a written request to OMV (or DPS) for the name change.

2. Upon approval of the name change, the applicant must submit the following documentation:

a. an application for change of name for a driving school, which may be downloaded from the OMV website;

b. copy of any required occupational or business license(s) in the new name;

c. a name change document if the company is on file with the Secretary of State;

d. a surety bond in the new business name in the amount of $20,000 from a company qualified to do business in Louisiana; and

e. a $25 application fee.

3. Certificates of completion cannot be issued under the new name until the new contract and license is issued.

J. Change of Address of Driving School

1. Prior approval is required for any classroom or business address change. OMV shall be notified 30 days prior to any change in address to allow for site inspection and verification.

2. Upon approval of the address change, the applicant must submit the following documentation to OMV:

a. an application for change of address for a driving school which may be downloaded from the OMV website;

b. a $25 application fee collected biennially. A one-year fee will be collected if the application is made during the second year of the license period;

c. documentation listed in Paragraph A.2 of this Section applicable to the new address; and

d. a behind-the-wheel lesson curriculum for the new address.

3. If the location is to be certified as a third-party tester site, the location shall meet the requirements for a tester site as listed in §156.

4. Classes cannot be conducted at the new address until a new contract is signed by OMV and the owner.

K. Additional Location of Driving School

1. A school owner may make application to open an additional location if he has successfully operated the initial (or last) location for at least two years and has submitted two consecutive compliance reviews that did not result in a letter of warning, a fine, a suspension or a revocation.

2. The school owner must submit the following:

a. a completed additional location application which may be downloaded from the OMV website;

b. a $25 application fee collected biennially. A one-year fee will be collected if the application is made during the second year of the license period;

c. documentation listed in Paragraph A.2 of this Section applicable to the new location; and

d. a behind-the-wheel lesson curriculum for the new location.

3. If the location is to be certified as at third-party tester site, the location shall meet the requirements for a tester site as listed in §156.

4. Classes cannot be conducted at the new location until a new license is issued by OMV.

L. Transfer of Ownership of a Private Driving School

1. The seller shall notify DPS of the pending transfer of ownership. School and instructor licenses are nontransferable as stated in §146.

2. The new owner shall follow the guidelines as prescribed in §146.

3. The commissioner has the final authority in the approval of all transfers of ownership.

4. If the previous owner does not desire a transition phase for the new school owner(s), the currently licensed owner(s) must complete instruction to the current students prior to the transfer of ownership and the new owner(s) must make application for a new driving school. New classes cannot be held by the previous owner(s) or new owner(s) until the transfer of ownership is completed and the new owner(s) is licensed. Once the bill of sale or transfer of ownership is executed, the previous owner(s) must return his original school license and all instructor licenses along with a copy of the bill of sale or transfer of ownership to OMV.

5. If the school is to remain operational during the transition to the new owner(s), the following guidelines covering businesses sold while maintaining the current location must be adhered to.

a. The new owner of the school shall submit an application to own a driving school.

b. The new owner must meet the qualification outlined in §145.

c. If the new owner currently maintains a driving school license, he may purchase a driving school with multiple locations, if approved by the commissioner.

d. If the new owner does not currently maintain a driving school license, multiple locations of a driving school may be purchased, but the new owner shall be licensed for a period of at least 60 days at one location, prior to administering driver's education at multiple locations, and upon approval by the commissioner.

6. OMV may require an interview and a sample of the lesson instruction with the potential new driving school owner(s).

7. The following documents must be submitted when a school has transferred ownership:

a. copy of the bill of sale or transfer of ownership;

b. all items as outlined in §146.E; and

c. copy of the lesson plan and course guide, including the new unit tests and final examination. If a new lesson plan and course guide are utilized; these documents shall be based on the curriculum as outlined in §154:

i. DPS shall approve if the same lesson plan can be utilized;

ii. in the event the same curriculum will be used, a modified course guide must be submitted along with a statement signed by the buyer and the seller that the same

curriculum will be utilized, if not specified in the bill of sale or transfer of ownership documentation;

8. if the vehicles utilized in the school are being sold and are registered in the school owner's name rather than the school's name, the title must be transferred to the new owner and the following documents must be submitted:

a. proof of registration of vehicles in the new owner's name;

b. certificate of insurance in the school's name stating that all vehicles utilized in the behind-the-wheel course are currently insured and that upon cancellation or expiration, DPS will be notified. This certificate shall be from the issuing insurance carrier and not the agency and identify (by description and vehicle identification number) the vehicle(s) covered. The limits shall be from a company authorized to do business in Louisiana in the amount of at least the minimum amount required by R.S. 32:900;

9. if the same instructors will remain with the school, a notification of employment of a currently licensed instructor form (DPSMV 6711) shall be completed and submitted along with a $10 application fee, in lieu of the instructor application packet;

10. all new instructors must complete the application process as outlined in §146;

11. a surety bond in the amount of $20,000 from a company qualified to do business in Louisiana shall be submitted;

12. a copy of any required occupational license or business license(s) in the new owner(s) name shall be submitted;

13. the new owner(s) shall have the location certified as a third-party tester site. The new owner shall obtain a new certificate of general liability insurance in the school's name. The certificate of general liability insurance shall list the school's address and the current policy dates. This certificate shall be from the issuing insurance carrier and not the agency. The limits shall be $1,000,000 per occurrence in general liability:

a. the certificate of general liability insurance must show OMV's address as a certificate holder or additional insured with the following address:

Office of Motor Vehicles
Attention: Training and Certification Unit
P.O. Box 64886
Baton Rouge, LA 70896

b. for any cancellations or expirations, the insurance carrier shall notify OMV;

14. a minimum of one instructor must be certified as a third-party tester examiner.

AUTHORITY NOTE: Promulgated in accordance with R.S. 32:402.1(A)(1), R.S. 40:1461 and R.S. 40:1462.

HISTORICAL NOTE: Promulgated by the Department of Public Safety and Corrections, Office of Motor Vehicles, LR 38:1976 (August 2012), amended LR 40:2603 (December 2014), LR 41:2665 (December 2015), LR 43:1762 (September 2017).

§147. General Regulations for Private Driving Schools

A. All approved private driving schools shall operate from an office in the following manner.

1. The school shall provide a written document to the prospective student detailing the course to be provided and the fee charged for each service. This document may be signed by the parent (if the student is a minor) or a student (if over the age of eighteen) and the school owner. A copy of this document and the paid receipt shall be provided to the person that signs the document.

2. DPS shall first approve any name to be used by a driving school. A school shall not use the word "state" or "education" in a part of the school name.

3. A school shall not use any name other than its approved name for advertising or publicity purposes, nor shall a school make any false or misleading statements in any of it advertisements or publications. A school shall not advertise or imply the school is "accredited" by any national or state organization for driving schools, when such accreditation does not exist.

4. A driving school shall not advertise in any way until the contract is offered by DPS to the driving school.

5. The school's license shall be conspicuously displayed in the business during operational hours. In the case of rented or leased space, the license shall be displayed at that location while the space is being utilized by the driving school.

6. In the event a school owner or instructor's license is revoked, that person shall not be involved in the administrative duties of the school without prior approval from the commissioner.

7. All schools shall post a sign within the classroom stating that anyone who wishes to file a complaint or has a grievance against the school may contact the Training and Certification Unit at the Office of Motor Vehicles, P.O. Box 64886, Baton Rouge, LA, 70896, Attn.: Training and Certification Unit. (225) 925-1795 or at ladrivingschools@dps.la.gov.

8. Driving schools may employ instructors currently licensed by DPS without repeating the application process. A notification of employment of a currently licensed instructor (DPSMV6711) form shall be completed and submitted along with an application fee of $10, in lieu of the instructor application packet.

9. The driving school shall adhere to all applicable federal, state and local laws and shall not engage in any form of unlawful discrimination or other activities. The owner or instructor shall not knowingly present to DPS false or misleading information relating to the licensing process.

10. Driving school owners shall not allow any person associated with the driving school, who has not passed a background check and whose background check is not on file with OMV, to be responsible for or to have direct care over minor students. The responsibility or direct care over

the minor students shall be any contact with a student, including but not limited to, monitoring students, or transporting students to and from instruction. This rule applies to all driving school employees, including instructors and administrative staff, and any other associates of the driving school.

11. Driving school owners are responsible for all actions that occur in association with their driving school. This includes actions of instructors, school employees and employees of other businesses the owner may be involved with.

12. Driving school owners shall ensure that each student or potential student that contacts the school is treated respectfully and professionally at all times, regardless of their age, race, sex, sexual orientation, religious affiliation, etc., in accordance with Louisiana law regarding discrimination.

13. Driving school owners are responsible for ensuring all instructors are familiar with the rules and regulations covering driver education providers and are aware of the consequences of violating these rules.

B. Surety Bond

1. School owners shall be required to maintain a $20,000 surety bond while maintaining a license to operate a driving school. In the event of a change of primary or main location of the driving school, a rider to the bond indicating the new address must be obtained and provided to OMV.

2. OMV shall be listed as the obligee.

3. Students (over 18) or parents (of minor students) may file with DPS for reimbursement of all or part of the course fee when the school or its instructors fail to provide the instruction as required by statute and these rules.

4. If the school is unable to complete a student's course, a parent or adult student may request a refund for the uncompleted portion of the course. This refund should be made available within 10 days of the request. If a reasonable request for a refund is not granted, the student and/or the parent may apply against the school's surety bond.

5. The parent/student must complete a claim form and submit the form and supporting documents with the claim to OMV for consideration. Supporting documents may include:

a. copy of paid receipt for course;

b. copy of any contract signed by parent/student and school; or

c. any documents for course scheduling.

C. A school shall have a commercially established primary location where records shall be kept in a secure manner. Records shall be available for inspection between the hours of 8 a.m. and 4:30 p.m., Monday through Friday. All schools must secure a business location for record keeping and test administration by September 20, 2017.

1. Classrooms utilized shall meet at least the minimum state, OSHA and ADA requirements for all classrooms.

a. All locations must be licensed prior to the classroom instruction.

b. A classroom location may be obtained by renting space from facilities in the form of a conference room or a meeting room. Photographs of these meeting rooms must be submitted with the license application for that location.

c. No classes are to be held in a room that is designed for temporary residence.

d. No facilities may be rented or leased from an establishment that restricts entrance by age (no minors).

e. No driving school shall be allowed to conduct business or instruction from a private residence. Any classroom located on private property shall not be attached to a private residence.

f. Classrooms shall begin and end at the same location, unless prior approval has been obtained from the commissioner.

2. The classroom shall be equipped with any current standards of equipment to properly instruct the classroom course.

3. The classroom may also be equipped with instructional software, traffic boards(s), state/local maps, laser pointer and traffic templates.

AUTHORITY NOTE: Promulgated in accordance with R.S. 32:402.1(A)(1), R.S. 40:1461 and R.S. 40:1462.

HISTORICAL NOTE: Promulgated by the Department of Public Safety and Corrections, Office of Motor Vehicles, LR 38:1977 (August 2012), amended LR 40:2604 (December 2014), LR 41:2665 (December 2015), LR 43:1765 (September 2017), LR 45:1602 (November 2019).

§148. Secondary/Alternative School Driver Education Program

A. Qualifications for Secondary Schools and Instructors

1. The school shall have an established physical location where the driver education program will be administered.

2. The applicant for a classroom instructor shall meet the qualifications for instructors listed in §145.B.

3. Qualifications for Eight-Hour Behind-the-Wheel Instructor. To be an eight-hour behind-the-wheel instructor the applicant shall:

a. meet all of the qualifications for a secondary school classroom instructor;

b. meet all of the qualifications in §145.C.

4. All instructors shall be approved by DPS and obtain an instructor's license prior to providing instruction.

AUTHORITY NOTE: Promulgated in accordance with R.S. 32:402.1(A)(1) and R.S. 40:1461.

HISTORICAL NOTE: Promulgated by the Department of Public Safety and Corrections, Office of Motor Vehicles, LR 38:1978 (August 2012), amended LR 43:1766 (September 2017), LR 45:1602 (November 2019).

§149. Application Process and Fees for Secondary/Alternative Schools and Instructors

A.1. Application process for individual secondary schools in which the driver education program is controlled at the school level, shall submit the following:

1. complete application package. Incomplete application packages shall be returned;

2. complete initial application for secondary school driver's education program (DPSMV6714);

3. non-refundable $50 application fee;

4. completed lesson plan as listed §146.A;

5. current e-mail address;

6. certificate of insurance in the school/system's name stating that all vehicles utilized in the behind-the-wheel course are currently insured and that upon cancellation or expiration, DPS will be notified. This certificate shall be from the issuing insurance carrier, not the agency; identify (by description and vehicle identification number) the vehicle(s) covered. The limits shall be from a company authorized to do business in this state in the amount of at least the minimum amount required by R.S. 32:900.

B. Application process for parish school system driver education programs which are controlled at the system level, shall include the following:

1. completed initial application for parish-wide driver education program application (DPSMV6713);

2. completed package as listed above in §146.A.3-6 in this Chapter for individual secondary school application process.

C. Application for a Secondary School Driver Education Instructor License. Incomplete application packages shall be returned. Applicants shall submit a completed secondary school driver education instructor application (DPSMV2148) and the documents as listed in §146.

D. Licenses

1. School/tester licenses shall be issued on a biennial basis. The initial license shall be valid from the date of issuance until August 31 of the current odd numbered year or next odd numbered year.

2. Every application for license shall be accompanied by a non-refundable application fee or renewal fee of $25 per year, collected biennially, per location or per school system.

3. Instructor/examiner license shall be issued on a biennial basis. The initial license shall be valid from the date of issuance until August 31 of the current odd numbered year or next odd numbered year.

4. If the completed application including all fees is not received by August 31, the license shall expire.

E. School/Tester License Fees

1. Every application or renewal for a school license shall be accompanied by an application fee or renewal fee of $25 per year, collected biennially, per location.

2. Every application or renewal for a third-party tester license shall be accompanied by an application fee or renewal fee of $50 per year, collected biennially, per location.

3. Every application for license shall be accompanied by a non-refundable application fee or renewal fee of $10 per year, collected biennially, for each individual instructor for the school or if a duplicate license is required.

4. If a school license or instructor license is lost or destroyed, a duplicate will be issued for a $10 application fee upon a statement of fact or, in the case of mutilation, upon surrender of such license.

F. Instructor/Examiner License Fees

1. Every application for an instructor license shall be accompanied by an application fee or renewal fee of $10 per year, collected biennially, or if a duplicate license is required.

2. Every application for an examiner license shall be accompanied by an application fee or renewal fee of $25 per year, collected biennially, or if a duplicate license is required.

3. Every application for license shall be accompanied by a non-refundable application fee or renewal fee of $10 per year, collected biennially, for each individual instructor for the school or if a duplicate license is required.

4. If a school license or instructor license is lost or destroyed, a duplicate will be issued for a $10 application fee upon a statement of fact or, in the case of mutilation, upon surrender of such license.

G. Renewal

1. Application for renewal of a license shall be made on the prescribed renewal form (renewal application), by the close of business on June 1 of the expiration year, and accompanied by the appropriate fees.

2. The fees shall be submitted in the form of a money order, certified check or check from a school.

3. Applications received after June 1, will be deemed untimely and may cause delay in renewal of the license. If the license is not issued prior to August 31, the school shall not be authorized to conduct any classes until the license is renewed.

4. Documents shall be submitted for the renewal process in the same manner as §147.B.8.

5. Any school that fails to renew their license within six months of expiration shall be required to begin the initial application process again.

AUTHORITY NOTE: Promulgated in accordance with R.S. 32:402.1(A)(1) and R.S. 40:1461.

HISTORICAL NOTE: Promulgated by the Department of Public Safety and Corrections, Office of Motor Vehicles, LR 38:1979 (August 2012), amended LR 38:3235 (December 2012), LR 43:1766 (September 2017).

§150. Regulations and Policies for Secondary and Alternative School Driver Education Courses

A. General Regulations for Secondary and Alternative Schools. All approved secondary and alternative schools shall operate from an office in the following manner.

1. In parishes where one or more instructors provide driver education instruction for all schools in the parish, the parish school system shall make application to provide driver education. The instructor shall be issued a parish-wide license for instruction.

2. If oversight for the driver education program is provided at the system level, the system shall determine the location where the records shall be kept. All records shall be maintained at a central location which provides DPS access to the records during daytime business hours.

3. Individual secondary schools shall apply to DPS for the approval of its driver education courses prior to the administration of same.

4. In school systems where the oversight for driver education is provided at the individual school level, the records shall be maintained at the individual school and shall be made available to DPS during daytime business hours.

5. Classroom instruction shall be provided at an approved and certified driving school. Home study is not permitted for any portion of the classroom instruction.

6. The school superintendent/principal shall share the responsibility for all acts performed by instructors or employees that are within the scope of employment and which occur during the course of employment.

7. Principals/superintendents shall be responsible for ensuring instructors complete continuing education courses in an effort to stay abreast of the latest trends and standards of driver education.

8. Secondary schools shall have the option to provide a six hour pre-licensing course.

9. Secondary schools shall have the option to administer the knowledge and road skills tests to students who are currently enrolled in its school system or have completed the system's driver education course.

AUTHORITY NOTE: Promulgated in accordance with R.S. 32:402.1(A)(1) and R.S. 40:1461.

HISTORICAL NOTE: Promulgated by the Department of Public Safety and Corrections, Office of Motor Vehicles, LR 38:1980 (August 2012), amended LR 43:1767 (September 2017).

§151. Regulations for All Driver Education Providers

A. General Requirements

1. The school owner may designate a representative (licensed instructor or office staff of the school) to oversee and assume responsibility for the operation of the school and to sign school documents, except for the Third Party Tester Agreement. The completed Assignment of Designated Representative form must be on file with DPS.

2. Employees of DPS whose duties relate in any way to the issuance of a driver's license shall not be connected with any driving school.

3. Failure to receive notification of information due to an improper e-mail address or filter setting is the owner's responsibility to correct.

4. The school shall notify DPS by e-mail at ladrivingschools@dps.la.gov of any change(s) in their contact information within 10 business days of such change.

5. Any additional instructors hired during the license period shall be properly licensed prior to administering any instruction.

6. The school shall permit DPS representatives to inspect the school and shall make available to DPS, when requested to do so, all information and records pertaining to the driver education program. Upon request, the school shall provide photo copies of the school records required by DPS.

7. The school shall not, by advertisement or otherwise, state or imply that a driver's license is guaranteed or assured upon completion of a driver education training course or the road skills test.

8. The school shall maintain adequate standards of instruction, qualified instructors, and equipment sufficient to adequately maintain the school and classes.

9. Instructors shall maintain a professional demeanor at all times when dealing with students.

10. Instructors shall not accompany any student into any examining office rented, leased or owned by DPS, for the purpose of assisting students in taking a driver's license examination.

11. Instructors shall not loiter, advertise or personally solicit any individual on the premises rented, leased or owned by DPS, and operated for the purpose of issuing driver's licenses.

12. Instructors shall not use the space provided on the premises of any office rented, leased or owned by DPS, for parallel parking or any other behind-the-wheel instruction during normal OMV business hours.

13. Each school shall maintain a minimum of one properly licensed instructor who is trained to administer road skills tests.

14. Home study is not permitted for any portion of the classroom instruction.

15. A school that is operating at a location without a current license may have its license and contract revoked or suspended, or a fine may be assessed.

16. All grievances or complaints made against the school and/or instructor shall be addressed within 10 business days and the resolution shall be documented.

17. The school shall notify OMV of any licensed instructor who leaves the employment of the school within 10 business days. The instructor license shall be returned to OMV for cancellation. OMV shall provide the school e-mail notification that the license has been received within 3 business days.

18. A licensed owner or instructor who is arrested for any offense which would disqualify him shall notify OMV in writing within three days of the arrest. Failure to notify OMV may result in suspension or revocation of the school and/or instructor license.

19. Owners/principals/superintendents are responsible for ensuring that instructors complete the required continuing education courses in an effort to stay abreast of the latest trends and standards of driver education.

20. Driver education instructors shall participate in and provide evidence of completion of at least two separate courses from the following list to obtain credit for continuing education on an annual basis. Credit shall be given only for courses that were completed during the appropriate licensing period. The same course cannot be submitted in consecutive years. The list includes:

a. post-secondary course that pertains to driver education as provided by an accredited college or university. A passing grade is required;

b. an approved defensive driving instructor development course;

c. a course provided by national, state, or regionally sponsored in-service workshops, seminars, or conferences that pertain to subject matters relative to the practice of driver education or teaching techniques; and

d. a course that pertains to subject matters relative to driving safety.

21. Each instructor shall once every two years provide proof of completion of:

a. a standard first aid or CPR certification; and

b. a training course on the prevention of sexual harassment.

22. In the event of a voluntary school closure, the school must notify OMV within 10 business days of closing by submitting the notification of facility closure form approved and provided by DPS/OMV. The original license shall be attached to the notification form.

a. The school may reapply within 180 days of closure (upon approval by DPS). A replacement license shall be issued with a new issuance date upon payment of a $25 fee.

b. If a new location is selected, the school shall not conduct any classes until the new location has been inspected and approved.

c. If the school has been closed for 180 consecutive calendar days, a new school application with applicable fees must be submitted.

23. An instructor may be eligible to apply to another licensed school if the school where the instructor is currently employed has its license or contract revoked.

24. Any person who engages in prohibited activity, such as, administering classroom instruction, behind-the-wheel instruction, issuing certificates of completion or advertising as a licensed, authorized or approved driving school, or holding oneself out as an authorized or approved driving school or instructor without a license, authorization or approval by DPS shall be subject to the issuance of a cease and desist order.

25. Approved driver education providers shall be listed on OMV's website upon license issuance.

26. School owners shall ensure students are enrolled in the correct course according to age and eligibility.

27. An instructor shall not request a student go to any location that is not in the scope of the driver education instruction or program.

28. An instruction shall not take a student to any location that is not in the scope of the driver education instruction or program.

B. Records Regulations

1. A school shall have a commercially established primary location where records shall be kept in a secure manner. Records shall be available for inspection between the hours of 8 a.m. and 4:30 p.m., Monday through Friday. Only schools which are currently licensed by June 30, 2012 and currently maintain records at the owner's residence are allowed to do so. If the physical location where records are kept is the owner's residence, the owner agrees to make the records available for inspection. All schools licensed from this point forward will be required to maintain a primary location for the records.

2. Any forms approved and provided by OMV/DPS shall not be modified without prior written approval from OMV, with the following exceptions.

a. Schools shall place the school name and license number on the heading of the document.

b. Portions of the document may be highlighted for ease of use for the instructor and student.

3. All schools shall make available records and necessary data required for licensing for inspection by authorized DPS representatives.

a. DPS may require a licensee to submit any original records and data that are necessary for the facilitation and/or completion of an investigation pertaining to a violation of these rules or the Child Protection Act.

b. All documents shall contain the required information or they shall be considered incomplete.

c. Any records that are required to be submitted from the school to DPS upon request from DPS, are then considered DPS records.

4. All records and necessary data pertaining to the operation of the school shall be maintained in the office for five years. A hardcopy original shall be maintained for one year. Records may be electronic after one year.

5. Records shall include, but are not limited to:

a. a file including the name, address and contact information of all guest lecturers;

b. a file on all instructors containing a copy of the instructor's license and employment records including time and attendance records as well as address and contact information;

c. a copy of lesson plans and other resources utilized for classroom instruction. Written documentation of the lesson plan for the behind-the-wheel portion of the course;

d. class schedules and sign in rosters from classes held;

e. copies of all written complaints and grievances filed with the school along with written documentation of the resolution.

6. Every driving school shall maintain the following records on the individual student who is administered either the driver's education or pre-licensing course:

a. official name and address of the school;

b. completed enrollment form which shall include, but is not limited to, the following:

i. a copy of the temporary instruction permit, telephone number and physical address (other than P.O. Box);

ii. optional parental/guardian consent for minor applicants, including identification presented;

iii. date of enrollment;

iv. any funds received from, or on behalf of, a student;

v. dates of classroom instruction;

c. date and reason why instruction terminated, if applicable;

d. copy of certificate of completion.

7. Every driving school shall maintain a class schedule and shall notify DPS of the classes scheduled, including the type of course to be administered. This schedule may be submitted biannually. DPS shall be notified of any changes in the schedule after submission to DPS. The driving school may post the class schedule on its website.

C. Minimum Course Standards

1. A minimum of one instructor is required for each classroom.

2. No more than eight hours of instruction, including unit tests or final examination, shall be conducted per day.

3. Administrative procedures, such as registration, shall not be included in instructional time. Registration shall be completed prior to the start of the first class session.

4. Lunch periods shall be proportionate to instructional time but shall not be considered as part of the instructional time for a driver education course.

5. Allotted break times shall not exceed 15 minutes per each 2 hours of instruction. All break periods shall be provided prior to the final examination.

6. The driver education course shall provide a minimum of 30 hours of classroom instruction. The formalized instruction, a minimum of 22 1/2 hours (75 percent), will consist of lecture, computer format and classroom discussion. The instruction provided with audio visuals may include films, slides, videos or demonstrations specifically designed to supplement the formalized instruction. A maximum of 7 1/2 hours (25 percent) may consist of audio visuals.

7. The driver education course and the pre-licensing course shall not be conducted simultaneously in the same classroom setting.

8. DPS reserves the right to attend any classroom course provided by the school to ensure full compliance with administrative code and course content.

9. The pre-licensing course shall provide a minimum of six hours of classroom instruction. The formalized instruction, a minimum of four and a half hours (75 percent), will consist of lecture, computer format and classroom discussion. The instruction provided with audio visuals may include films, slides, videos or demonstrations specifically designed to supplement the formalized instruction. A maximum of one and a half hours (25 percent) may consist of audio visuals.

10. Daily quizzes are recommended to measure the effectiveness of instruction during the classroom course. Daily quizzes shall not replace the final test.

11. A student may opt to complete the behind-the-wheel instruction at a different school. The school shall provide the student with the appropriate certificate of completion for requirements met by the student.

12. A school owner, instructor or employee shall not give a student the impression, by advertisement or otherwise, that a driver's license, learner's permit, or certificate of completion is guaranteed or assured.

13. A school owner, instructor or employee shall not give any impression that Carnegie credits will be given upon completion of this course, without the expressed written approval of the Louisiana Department of Education.

D. Classroom Setting Standards

1. The classroom capacity shall meet the stipulations as defined in §147.C.

2. Classroom settings shall be conducive for learning and shall include seating in the form of tables and chairs or desks.

3. Multiple classrooms shall be separated by solid walls which are made of materials that reduce noise transfer between classrooms.

4. Schools which share locations with other businesses shall take all means necessary to ensure the security and safety of minor students and shall ensure the location is free of interruptions during scheduled class times.

E. Exam Standards

1. A final examination, provided by DPS, shall be administered to all students at the completion of the course. Students may not be given credit for the classroom course unless they score at least 80 percent on the final examination.

2. Passing the final examination in the driver education course shall qualify the student for a driver's license or a learner's permit without the administration of a knowledge test by OMV.

3. Once a year DPS shall furnish the school with new versions of the knowledge test. The school shall shred all previous versions of the tests upon receipt of the new updated versions.

4. All copies of the tests and answer keys shall be kept under lock and key at all times. In order to deter theft, photocopies of the test shall not be produced in bulk. Photocopies of the test should be produced at the completion of the course and only sufficient numbers photocopied for the enrolled students. Any unused tests should be shredded.

5. Lost or stolen knowledge tests shall be reported to OMV immediately. The local law enforcement agency shall also be notified and a police report shall be submitted to OMV immediately.

6. Each student who is administered the final knowledge test shall be notified, prior to testing, that he is subject to being retested by OMV at any time.

7. The classroom instructor shall ensure that students seated next to each other have different versions of the test to complete.

8. Any student who fails the final exam shall be allowed to retest once the same day. If the student does not pass the test on the second attempt, the student may return any day thereafter and retest twice each day until the test is passed.

9. Students who cheat on the test will have the test destroyed and shall wait 30 days before retesting.

10. The completed test shall be attached to the certificate of completion for surrender to DPS at the time of license application. Both documents shall be placed in a sealed envelope.

11. Students may not leave the classroom during the final examination. Electronic devices (tablets, PDAs, cell phones) for personal use shall not be allowed in the classroom during examinations. Electronic devices used for test administration are acceptable.

12. Schools and/or instructors that provide students with the answers to the test, teach only the information contained on the test, do not properly secure the tests, and assist a student to pass the final exam by deceptive practices, or accept bribes to give a student a passing score shall have their license/certification/agreement revoked.

F. Insurance and Safety Requirements

1. Every motor vehicle used for behind-the-wheel instruction shall be properly registered in Louisiana and display a current Louisiana inspection sticker. The vehicle shall be equipped with the following special equipment:

a. securely installed dual controls of the foot brake (and clutch on vehicles with manual transmission), capable of bringing the vehicle to a stop and otherwise equipped, in accordance with Louisiana laws;

b. interior rearview mirrors attached to the windshield, one for the driver and one for the instructor to monitor traffic;

c. appropriate cushions for proper seat in seating, and brake and accelerator pedal extensions available for students when necessary;

d. instructor's eye check mirror to monitor eye movement of students;

e. first aid kit; and

f. fire extinguisher (at least UL rated 5B:C).

2. All vehicles utilized in the behind-the-wheel instruction shall be properly insured in the school's name. A certificate of auto liability insurance shall be provided to DPS identifying (by description and vehicle identification number) the vehicle(s) covered. This certificate shall be from the issuing insurance carrier, not the agency. The limits shall be from an insurance company authorized to do business in this state in the amount of at least the minimum amount required by R.S. 32:900. Upon cancellation or expiration of the policy, DPS shall be notified by the insurance carrier.

3. Every vehicle used for behind-the-wheel instruction shall contain a conspicuously displayed, securely fastened sign to the rear stating "student driver." A sign bearing the name of the driving school under which it is licensed may be used in lieu of the student driver sign. The sign shall be in plain view and shall have contrasting letters not less than 3 1/2 inches in height, readable from a distance of not less than 100 feet. A decal or sign listing the school name, address and phone number shall be displayed on each side of the vehicle.

4. DPS shall be advised via e-mail at la.driving.schools@dps.la.gov within 10 business days of a vehicle that is removed from service and shall be provided

the required information on replacement vehicles. OMV shall provide the school e-mail notification within three business days that the information has been received. The school shall send the odometer reading of vehicles for the first and last day of service and proof of registration for the vehicle(s) removed or added to service.

5. Motor vehicles utilized for behind-the-wheel instruction shall have less than 300,000 miles recorded on the odometer and shall be maintained in safe mechanical and physical condition at all times. Vehicles utilized should be of a type that is not intimidating to a novice driver. It is recommended that vehicles used are in the "compact" or "intermediate" size classification.

6. Fleet Policies. If the driving school is covered under a fleet policy and desires to add another vehicle to its fleet, it must advise the insurance company to notify DPS that this unit (specifying the make, model and vehicle identification number) has been added. The insurance company shall furnish the department a copy of the certificate of auto liability insurance with the addition of the vehicle.

G. Temporary Instruction Permit

1. Prior to the administration of a knowledge test in a driver education or pre-licensing course, driving skills instruction in a driver education or pre-licensing course or the administration of a road skills test, a student shall obtain a temporary instructional permit (TIP) from OMV as required by R.S. 32:402.1. School owners will verify that the permit has been obtained and shall make a copy of the TIP to be included in the student's file.

2. In the event that the person applying for a TIP has or has had his driving privileges suspended pursuant to R.S. 32:661 et seq., and the person is required to have an ignition interlock as a condition of reinstatement, then the TIP may be issued for purposes of operating a motor vehicle during the behind the wheel portion of the driver education or pre-licensing course or during the administration of the road skills test without an ignition interlock device being required.

H. Behind-the-Wheel Instruction Requirements

1. A student shall be at least 15 years of age to participate in the behind-the-wheel instruction.

2. The domiciliary parent/guardian of a minor student may sign the consent prior to any behind the wheel instruction. The consent shall be signed in the presence of the owner or an instructor.

3. Prior to each behind-the-wheel driving session, the school shall verify that the student's temporary instructional permit is in his possession at all times while driving. The permit shall be presented upon request to any law enforcement officer.

4. No more than two students shall be allowed in a school vehicle during the behind-the-wheel instruction. Only the student driver and the driving instructor shall be allowed in the front seat of such vehicle. Students shall not receive credit for riding time.

5. The behind-the-wheel instructor shall use and complete the driver education vehicle monthly log each time a student operates the driver education vehicle. The log shall not be utilized to record a student's riding time. At the end of each month, the log shall be filed in the primary office of the school.

6. The 8-hour behind-the-wheel instruction shall be completed within 90 days of the end of the classroom instruction for the 6-hour classroom course. The 8-hour behind-the-wheel instruction shall be completed within 120 days of the end of the classroom instruction for the 30-hour classroom course.

a. It is the responsibility of the driving school, (not the parent/student) to schedule acceptable times for the student's behind-the-wheel instruction and to finish it within the 90-day or 120-day timeframe.

b. Behind-the-wheel instruction shall not be performed before 6 a.m. or after 10 p.m. or during any time that would result in an unexcused absence from school as defined by the Louisiana Department of Education.

c. The school must provide documentation satisfactory to DPS that a student has not completed the behind-the-wheel course for reasons that are beyond the control of the school. Acceptable reasons include, but are not limited to, the following:

i. the student was given sufficient notice and opportunity to complete the course;

ii. the student was provided a certificate of completion for the classroom portion;

iii. the student has been issued a refund of the fee, if any, specifically for the eight-hour behind-the-wheel course;

iv. the student has been removed from the active class roster for documented cause.

d. If the driving school has not completed behind-the-wheel instruction within the requisite time frame, DPS may issue an order to the driving school to not begin any classroom instruction until all outstanding behind-the-wheel instruction is complete. DPS will notify the school when the order has been lifted. Violations of this Section may be subject to a fine.

e. If the behind-the-wheel driving portion of the class is terminated or cannot be completed within the required timeframe, documentation with details explaining the reason shall be maintained in the student's file. OMV may contact the student, parent or guardian to verify the reason listed is accurate.

f. Upon DPS' request, the driving school must provide records of the behind-the-wheel instruction to DPS.

7. Electronic communication devices shall not be utilized by any occupant of the vehicle during a driving

session, except in emergency type situations or when the vehicle is stopped and off the road in a safe location.

8. The student shall not engage in any activity unrelated to driving instruction during behind-the-wheel instruction.

9. Behind-the-wheel instructors shall remain alert during the student's driving session.

10. An instructor shall not perform any other activity not pertaining to supervising behind-the-wheel driving instruction.

11. The behind-the-wheel instruction shall expose the student to as many types of roadways as possible, based on the student's skill level progression. At least one hour of instruction on the following types of roadways is recommended:

a. rural roads;

b. city roads;

c. major highways;

d. interstate;

e. to and from a student's home and school; or

f. additional time may include traveling roadways where the student exhibits any weakness.

12. A student's driving progress shall be documented in the student's record.

13. The beginning and ending odometer reading on the vehicle shall be recorded prior to each student's diving session. Any odometer reading shall not be altered without an accompanying explanation.

14. Approved scoring criteria shall be standardized, as determined and approved by DPS. Each applicant starts with 100 points. The applicant shall receive 70 points or better to pass the eight-hour behind-the-wheel course.

15. If the driving school instructor suspects that the person is impaired at the time he presents himself for the behind the wheel instruction and training, the driving school instructor shall not conduct the behind the wheel instruction and the driving school instructor shall promptly report the incident to the OMV.

16. Neither the driving school instructor, nor the driving school employing the driving school instructor, shall be liable in any manner to any person who is denied behind the wheel instruction and training except for any partial refund attributable to the behind the wheel portion of the driver education or pre-licensing course.

I. Driver Education Certificate of Completion Requirements

1. The driver education certificate of completion will expire five years after the completion date.

2. Every driving school approved by DPS, shall be required to serially number and complete the uniform driver education certificate of completion. Each certificate shall display a distinguishing seal, consisting of the driving school's name, affixed to the specified area of the form, not to obscure any of the required signatures.

3. The certificate of completion shall be completed in its entirety by school personnel prior to issuance to the student.

4. Upon request, driving schools shall provide photocopies or duplicates of driver education certificate of completion upon a student's request for a minimum of five years from the date of issuance. Such duplicates shall be signed and dated by the owner of the driving school.

5. Every driving school shall maintain an ascending numerical accounting record of all certificates issued.

6. Unissued driver education certificates of completion shall be safeguarded at all times. The certificates shall be kept in a secure place under lock and key and shall be made available to those representatives of the driving school authorized to issue such certificates, DPS representatives, and any law enforcement agency during normal business hours.

7. Unissued lost or stolen certificates of completion shall be reported to DPS immediately. If a theft or suspected theft has occurred, the local law enforcement agency shall also be notified and a police report submitted to OMV.

8. A student may opt to complete the behind-the-wheel instruction at a different driving school. The school shall provide the student with the appropriate certificate of completion for requirements met by student.

9. Schools shall complete a student assessment including any comments relevant to the student's proficiency and shall attach the assessment to the driver education certificate of completion to advise the parent(s) of the student's driving proficiency

J. Code of Conduct of Driving Schools

1. All driving schools shall comply with all applicable federal, state, and local laws and regulations.

2. All driving schools shall conduct themselves in a professional manner when communicating with the public, students and representatives of DPS.

3. All driving schools shall encourage their employees to perform their duties conscientiously, honestly and in accordance with the best interests of DPS and the students.

4. All driving schools are representatives of DPS and shall conduct themselves in such a manner that reflects positively on the mission statement set forth with DPS.

5. All driving schools shall demonstrate the core values of integrity, respect, performance excellence and accountability.

6. The driving school shall adhere to applicable federal, state, and local laws and shall not engage in any form of unlawful discrimination or other illegal activities.

AUTHORITY NOTE: Promulgated in accordance with R.S. 32:402.1(A)(1) and R.S. 40:1461.

HISTORICAL NOTE: Promulgated by the Department of Public Safety and Corrections, Office of Motor Vehicles, LR 38:1980 (August 2012), amended LR 41:151 (January 2015), LR 43:1767 (September 2017), LR 45:1603 (November 2019).

§152. School Policies and Course Specifications

A. Every driving school shall furnish each student/parent with the school policies prior to the beginning of any instruction. The following information shall be contained in the school policies.

1. The total fee for the course of instruction shall be listed by classroom fee and behind-the-wheel fee. This fee shall cover all expenses including the cost of the original and at least one copy of the driver education certificate of completion provided to each student.

2. Any additional charge for the use of a school vehicle in taking behind-the-wheel instruction or for transporting a student to/from instruction.

3. In the event of a school's closure, either by voluntary measures or by action of DPS, a refund will be issued upon request. All refunds will be processed within 30 days after the effective date of termination or request, whichever occurs first.

4. The school's standards of required behavior including but not limited to:

a. an absolute prohibition against cheating as well as the consequences which will result if these standards are violated;

b. the school's policy on students' use of electronic communication devices in the classroom; and

c. the school's policy pertaining to absence and rescheduling procedures.

B. Course Specifications

1. The purpose for course specification is to explain the documentation and procedures for the student/parent required for the course.

2. DPS' grading policy, indicating that a passing score of 80 percent on the classroom and 70 percent behind-the-wheel shall be achieved in order to be issued a driver education certificate of completion.

3. Explanation of instruction the student will receive including:

a. number of mandated classroom instruction hours;

b. number of mandated behind-the-wheel instruction hours; and

c. how the student's performance will be evaluated and the requirements necessary to complete the course.

4. Identification of alternative testing techniques to be used for students with hearing, speech or learning disabilities. This information should be made available prior to the student's enrollment.

C. School Policies

1. If the school is unable to complete a student's course, a parent or adult student may request a refund for the uncompleted portion of the course. This refund should be made available within 10 days of the request. If a reasonable request for a refund is not granted, the student and/or the parent may apply against the school's surety bond.

2. In the event of a school's closure, either by voluntary measures or by action of DPS, a refund will be issued upon request. All refunds will be processed within 30 days after the effective date of termination or request, whichever is sooner.

3. Any student(s) trained by an unlicensed instructor may shall be entitled to a refund of tuition and fees as determined by the department.

AUTHORITY NOTE: Promulgated in accordance with R.S. 32:402.1(A) (1) and R.S. 40:1461.

HISTORICAL NOTE: Promulgated by the Department of Public Safety and Corrections, Office of Motor Vehicles, LR 38:1984 (August 2012), amended LR 43:1772 (September 2017).

§153. Parental Orientation [Formerly §154]

A. Upon enrollment of a minor student, the school shall conduct a parental orientation responsibility segment with the parents/guardian of the student. The school shall maintain a roster of the parents/guardian who attended the parental responsibility segment. The segment shall include, but not be limited to the following:

1. a review of the course content;

2. a review of the leading factors involved in teen driver collisions;

3. the graduated driver license program;

4. determining the readiness of the teen to begin the driving process;

5. the parent's responsibility to enhance the teen's driving experience;

6. supervising the teen's driving to determine his readiness to advance to the next licensing stage;

7. the parent/guardian's responsibility to provide a minimum of 50 hours supervised practice driving including 15 hours night time practice; and

8. parent/teen agreement.

B. The parental segment shall not count as part of the 30 hours of classroom instruction and shall be conducted prior to the first day of class.

C. In lieu of the school requirement, DPS may approve and designate a third-party to provide the parental responsibility segment. The parent/guardian shall be required to attend the third-party segment and provide proof of attendance to the driving school prior to the minor's participations in any classroom instruction.

D. In the event the parent is unable to attend the parental responsibility segment, the school may offer the class information online or in a handout that contains all the information that would normally be presented in the class. The parent must initial they have received the information and this must be made part of the student's file. If the class is taken online, confirmation of the online class should also be included in the student's file.

AUTHORITY NOTE: Promulgated in accordance with R.S. 32:402.1(A) (1) and R.S. 40:1461.

HISTORICAL NOTE: Promulgated by the Department of Public Safety and Corrections, Office of Motor Vehicles, LR 38:1985 (August 2012), amended LR 38:3235 (December 2012), LR 43:1772 (September 2017), LR 45:1603 (November 2019).

§154. Driver Education Curriculum

A. The curriculum contained in this Subchapter was obtained from documents provided by National Highway Traffic Safety Administration (NHTSA) for Novice Teen Driver Education and Training Administrative Standards. It was prepared by the Driving School Association of the Americas and meets the current recommended national standards.

1. The curriculum as provided in these rules shall be covered in its entirety.

2. The order in which the topics are presented and the manner in which they are presented are left up to the discretion and teaching strategies of each school.

3. Each school will be responsible for utilizing its creative license to present the course in such a manner the students will absorb and retain the information presented.

4. Media resources may be used to augment the program's curriculum. All media resources shall relate to the topic presented and shall not contain any offensive or inappropriate subject matter. A master list of media resources shall be maintained in the school's records.

B. The Louisiana Driver Guide for Class D/E License will include the curriculum utilized in the 30- and 6-hour classroom course and will be made available to students and/or schools from DPS.

C. Core Curriculum

1. Chapter 1: Introduction to Driving. This chapter will describe the requirements to obtain a Louisiana driver's license and general nature of the driving task in the complex highway transportation system (HTS), while recognizing the importance and seriousness of the highway safety problem. The many interactions of the three major elements of the HTS, roads, vehicles and people, result in a large number of diverse traffic situations and problems:

a. Louisiana process for earning the privilege to drive:

i. age requirements;

ii. organ donation;

iii. selective service;

iv. graduated license program; and

b. highway transportation system:

i. the traffic safety problem (instructional objective—to develop an understanding of the nature of the traffic safety problem and to instill in each student a sense of responsibility for its solution):

(a). identification of the overall traffic problems in the United States and Louisiana, as well as the local jurisdiction where the course is being taught;

(b). death, injuries and economic loss resulting from motor vehicle crashes in Louisiana; and

(c). five leading causes of motor vehicle crashes in Louisiana as identified by the Department of Public Safety and Corrections, Public Safety Services;

ii. careless and/or reckless operation;

iii. failure to yield;

iv. following too closely;

v. speeding;

vi. unknown/unspecified;

vii. each year the current statistics can be obtained from http://datareports.lsu.edu;

c. driving in the highway transportation system (instructional objective—understanding highway traffic systems and the driver's responsibilities):

i. make-up of a complex system:

(a). number and types of elements;

(b). continuous interaction of elements; and

(c). need for regulations and control;

ii. number and types of traffic units:

(a). kinds of vehicles and its condition;

(b). characteristics of drivers;

(c). pedestrians and animals; and

(d). traffic volumes and congestion;

iii. number and types of highways:

(a). design features;

(b). conditions and maintenance; and

(c). environmental settings;

iv. number and types of traffic controls:

(a). signs and signals;

(b). roadway markings; and

(c). written laws.

2. Chapter 2: Vehicle Components and Operation. What can a motor vehicle do or not do in a given situation? The more drivers know about a car's maneuvering and

performance capabilities, the better they can handle emergencies. Drivers will also be better prepared to predict the probable actions of other drivers:

a. proper use of safety restraint systems:

i. law of physics:

(a). momentum;

(b). inertia;

(c). kinetic energy;

(d). gravity;

(e). friction; and

(f). force of impact;

ii. proper safety belt position; and

iii. jurisdictional laws and driver responsible for compliance of all passengers in the vehicle;

b. safe and proper use of basic vehicle equipment:

i. control devices;

ii. instruments and warning indicators;

iii. devices that aid visibility;

iv. safety devices;

v. comfort devices;

vi. anti-theft devices;

vii. communication devices; and

viii. traction control devices;

c. safe and proper pre-trip checks:

i. maintaining your vehicle (instructional objective—a well maintained vehicle is safer to drive):

(a). vehicle inspection;

(b). preventive maintenance—brakes, tires, steering/suspension, under the hood;

(c). fuel economy—vehicle choice and maintenance, driving habits; and

(d). planning a trip—preparing vehicle and yourself;

ii. friction:

(a). speed for conditions;

(b). effect of road surfaces on stopping;

(c). seasonal changes and road surfaces; and

(d). tire types and conditions;

d. vehicle handling. Safe and responsible vehicle control:

i. controlling the vehicle safely and responsibly:

(a). hand position;

(b). visual tracking;

(c). steering control and over steering and understeering;

(d). seating position;

(e). starting and accelerating;

(f). speed control;

(g). deceleration and braking and comparison of ABS systems, power brakes and standard actions;

(h). changing lanes;

(i). parking brake;

(j). parking;

(k). changing direction and turns;

(l). passing;

(m). following distance;

(n). right-of-way maneuvers;

(o). turns;

(p). cornering;

(q). highway and freeway driving; and

(r). urban and rural driving;

ii. safe and responsible handling of the vehicle under various conditions:

(a). weight management;

(b). time management;

(c). space management;

(d). stopping distances;

(e). braking distances;

(f). following too closely;

(g). speed for conditions;

(h). effect of road surfaces on stopping;

(i). seasonal changes and road surfaces; and

(j). tire types and conditions;

iii. safe and responsible driving to avoid crashes:

(a). crash avoidance habits and basic evasive maneuvers.

3. Chapter 3: Perception and Risk Management—to Develop Knowledge, Appreciation, and Skills Related to Perception and Risk Management and How They Contribute to Safe and Responsible Driving

a. Safe and proper observation skills:

i. what and where to observe and when:

(a). 360 degree vision;

(b). distance scanning and judgment;

(c). peripheral vision;

(d). blind spots;

(e). visual obstructions; and

(f). limits of observation;

ii. how to observe:

(a). active attention;

(b). shoulder checks;

(c). peripheral vision; and

(d). mirrors;

iii. visual search and scanning to detect potential hazards:

(a). distinguish hazards from typical occurrences;

(b). scanning patterns under all conditions; and

(c). detecting potential path deviations;

iv. potential hazards of driving and effective responses:

(a). vehicle malfunctions;

(b). weather/environmental conditions;

(c). road conditions;

(d). railroad crossings;

(e). vehicle conditions;

(f). distractions inside the vehicle;

(g). distractions outside the vehicle;

(h). other road users and air turbulence from large vehicles;

(i). unpredictable driving behavior;

(j). driving error resulting in danger to self and to other road users; and

(k). detection and recovery from skidding and sliding—principles of skid control and slide control.

b. Effective decision making to ensure safe driving:

i. hazard perception, decision making, and judgment:

(a). scan, identifying problems, predicting outcomes, deciding action and executing decisions (SIPDE);

(b). using the SIPDE process—avoiding, separating and handling hazards, managing time, speed and space, following and stopping distance; and

(c). trouble spots limiting use of SIPDE process—limited visibility, traction, space;

ii. using decision making skills to drive safely:

(a). evaluate whether or not to drive;

(b). anticipate what might happen;

(c). predict possible solutions;

(d). prioritize situations and solutions;

(e). make appropriate choices under pressure;

(f). identify consequences;

(g). make multiple decisions quickly; and

(h). develop a hierarchy of responses to various situations and alternative responses.

4. Chapter 4: Traffic Laws. Without good traffic laws and enforcement, the safe and efficient movement of traffic on our highways would not be possible. Traffic laws are of little value if they are not understood and voluntarily followed.

a. Safety

i. Traffic laws for safety (instructional objective—familiarization with traffic and vehicle laws and to influence drivers to comply with laws on a voluntary basis):

(a). seat belt usage and child restraints;

(b). right-of-way rules;

(c). speed laws;

(d). special safety laws—DWI, implied consent, open container, post-collision procedures;

(e). texting/cell phone usage;

(f). driving while fatigued/under duress or stress;

(g). emergency vehicles; and

(h). multi-lane highways and left lane usage.

ii. Compliance with traffic control devices as a foundation for safe and responsible driving and traffic control devices:

(a). signs;

(b). signals;

(c). markings; and

(d). railroad crossings.

iii. Major traffic law violations:

(a). reckless homicide;

(b). reckless driving;

(c). driving under the influence of alcohol or drugs; and

(d). driving without a license.

b. Other issues:

i. other law violations:

(a). financial responsibility/compulsory insurance;

(b). littering; and

(c). possessing, obtaining, or using a fraudulent driver's license, or identification card.

ii. Alcohol, other drugs, and driving:

(a). drug use and abuse—dangers, cautions, effects;

(b). alcohol and the driver—effects; and

(c). responsibilities as a driver, passenger, host, person.

5. Chapter 5: Driver Behavior—to Develop Knowledge, Appreciation, and Skills Related to Driver Behavior and How It Contributes to Safe, Responsible, and Incident-Free Driving

a. Assessment and reactions:

i. accurate assessment of driving environments, road conditions and appropriate adjustment of driving behavior:

(a). adjusting driving behavior for different driving conditions;

ii. controlled emotional reactions related to driving:

(a). potential effects on driver decision making; and

(b). recognizing internal cues and control responses;

iii. positive driving attitudes and behavior.

b. Personal factors and influence:

i. personal driving values and beliefs;

ii. motives that influence driving;

iii. how motives change under different circumstances; and

iv. how values, beliefs, and motives influence attitudes toward driving.

c. Social factors and influence:

i. influence of advertising;

ii. social attitudes towards cars and driving;

iii. influence of other people's driving habits; and

iv. peer pressure and driving.

d. Resisting negative pressures:

i. personal value of resisting negative pressures;

ii. resist negative informal pressures;

iii. resist negative media and commercial messages; and

iv. entertainment media use of driving imagery.

e. Positive driving attitudes:

i. driving is a privilege not a right;

ii. overcoming negative motives;

iii. driving courteously;

iv. cooperative driving; and

v. impact of driver behavior on other road users.

f. Responsible and informed decision making:

i. how formal rules of the road, common safe practices of road users, and informed decision making contribute to safe and responsible driving;

ii. approaches to decision making;

iii. importance of good decision making; and

iv. consequences of poor decision making.

g. Environmentally conscious and efficient driving behavior:

i. fuel efficiency;

ii. mandatory emissions testing (inspection stickers);

iii. proper disposal of cars, fluids, batteries, and tires;

iv. littering;

v. planning safer and more efficient activities and routes; and

vi. economic benefits of driving efficiently.

6. Chapter 6: Sharing the Road. To develop knowledge, appreciation, and skills to related to effectively interacting with other road-users and how it contributes to safe, responsible, and incident-free driving:

a. cooperative driving:

i. sharing the road in a safe and considerate manner;

ii. understanding other road-users needs;

iii. passing safely;

iv. space management;

v. benefits of cooperative and courteous driving;

vi. pedestrians, animals and bicycles;

vii. sharing the road with school buses;

viii. sharing the road with motorcycles and mopeds;

ix. sharing the road with commercial vehicles;

x. sharing the road with law enforcement and emergency vehicles; and

xi. cooperative interstate driving;

b. appropriate communication with other road users:

i. communicating effectively with other road users; and

ii. habits and attitudes related to effective communication;

c. consistently communicate driving intentions;

d. adjusting communication based on observation of the driving environment and other road users;

e. towing a vehicle; and

f. safety tips for driving with a trailer.

7. Chapter 7: Attention—to Develop Knowledge, Appreciation, and Skills Related to Attention and How It Contributes to Safe, Responsible, and Incident-Free Driving

a. Safe and responsible actions related to impaired driving:

i. types of impairment:

(a). drug;

(b). alcohol;

(c). fatigue;

(d). drowsy driving;

(e). illness;

(f). medication;

(g). mental stress; and

(h). combination of multiple impairments;

ii. effects of impairment:

(a). impaired judgment; and

(b). lack of attention/alertness;

iii. myths and facts related to impairment; and

iv. consequences of impaired driving:

(a). personal and social consequences—responsibilities of a driver, passenger, host and person; and

(b). legal and economic consequences.

b. Managed driver distraction:

i. distracted driving:

(a). distraction inside the vehicle; and

(b). distractions outside the vehicle;

ii. managing attention:

(a). switching attention;

(b). divided attention;

(c). focused attention; and

(d). sustained attention.

8. Chapter 8: Respect and Responsibility—to Develop Knowledge, Appreciation, and Skills Related to Respectful and Responsible Driving Attitudes and How They Contribute to Safe, Responsible, and Incident-Free Driving

a. Safe and Responsible Response to Emergency Situations

i. Responding to emergency situations:

(a). minor or major motor vehicle crashes;

(b). arriving at the scene of a crash;

(c). being stopped by a law enforcement officer, including, but not limited to the following:

(i). instruction concerning law enforcement procedures for traffic stops;

(ii). instruction on the importance of officers, drivers, and passengers maintain integrity and respect during traffic stops;

(iii). demonstrations of appropriate interactions with law enforcement; and

(iv). demonstrations of the proper actions to be taken during traffic stops;

(d). yielding to an emergency vehicle; and

(e). vehicle malfunctions.

b. Leadership in Promoting Safe Driving

i. Being a safe, respectful, and responsible driver:

(a). being a leader in safety restraint use and promote it in others;

(b). being fit to drive and promote it in others; and,

(c). being caring and empathetic towards other road-users.

ii. Conflict avoidance regardless of fault:

(a). respecting other road-users' safety margins; and

(b). avoiding road rage in yourself and others.

c. Respect for the Environment as it Relates to Operating a Vehicle

i. Environmentally conscious and efficient driving behavior:

(a). fuel efficiency;

(b). mandatory emissions testing;

(c). proper disposal of cars, fluids, batteries, and tires;

(d). littering;

(e). planning safer and more efficient activities and routes; and

(f). economic benefits of driving efficiently.

d. Lifelong Learning Approach to Driving

i. The driver as a lifelong learner:

(a). factors that contribute to changes in driving skill;

(b). changing motor vehicle technology;

(c). changing driving practices and laws; and

(d). the aging driving population.

9. Chapter 9: Defensive Driving:

a. five leading causes of collisions:

b. basic maneuvers for avoiding collisions:

i. tactical maneuvers; and

ii. mental skills;

c. major driving errors:

i. compensating for another driver's error;

d. counter measures for driver physical conditions:

i. fatigue;

ii. illness;

iii. physical impairments;

iv. stress; and

v. trip fatigue.

10. Chapter 10: Summation and Review—Comprehensive Summation of Chapter(s)/Chapter Test(s) and Knowledge Test. Upon completion of the classroom course and review of the chapters, the school shall administer the knowledge test.

D. Eight-Hour Behind-the-Wheel Curriculum. The behind-the-wheel portion of the curriculum will be limited to no more than 4 hours behind-the-wheel for each student daily with a 15-minute break after 2 hours driving time. There shall be no more than two students in the vehicle with the instructor. Upon completion of the behind-the-wheel portion, a skills assessment shall be performed by the instructor. A road skills test shall be administered and the student shall attain a minimum score of 70 percent or more to receive a certificate of completion.

1. Practical instruction shall include, at a minimum, the demonstration of and actual instructions in the following maneuvers:

a. vehicle checks:

i. pre-trip vehicle inspection—outside/inside vehicle;

b. turning skills:

i. steering; and

ii. turn signals;

c. intersection awareness:

i. traffic signals;

ii. driving through;

iii. stops; and

iv. right of way laws;

d. lane changes;

e. signs, lanes, and signals;

f. traffic signals;

g. space management;

h. S.I.P.D.E. process;

i. parking skills;

j. reversing skills;

k. turnabouts;

l. city driving;

m. expressway;

n. areas of high risk:

i. shared left turn lane;

ii. median crossover;

iii. service roads;

iv. off-road recovery;

v. head-on collisions;

vi. poor weather;

vii. skid recovery;

viii. controlled braking; and

ix. night time driving;

o. railroad crossings;

p. emergency vehicles;

q. school buses; and

r. breakdown/collision.

2. The instructor shall gauge the driver's proficiency and provide feedback on the following skills:

a. observation;

b. communication;

c. speed adjustment;

d. vehicle positioning;

e. time and space management; and

f. hazard perception.

3. Student Assessment. During the last driving session with the student, the instructor shall perform a skills test to determine the student's ability to safely operate a vehicle. A minimum score of 70 percent shall be attained to pass the driver education course.

4. Upon completion of the eight-hour behind-the-wheel course, the instructor shall complete an in-depth

assessment of the student's performance over each maneuver and skills covered above. The assessment shall be provided to the student and parent (if a minor) as a tool to continue driving instruction:

a. visual search;

b. space management;

c. appropriate speed choices;

d. attention (distractions);

e. emergency evasive actions;

f. physical control of the vehicle;

g. pre-trip preparation;

h. backing up;

i. accelerating and braking;

j. left turn;

k. right turn;

l. proper lane usage;

m. lane change;

n. obeying traffic signs and signals; and

o. stopping.

5. The driver education certificate of completion shall be completed when a student has attained a minimum score of 80 percent on the knowledge test and a minimum score of 70 percent on the eight-hour behind-the-wheel portion of the course.

E. Six-Hour Pre-Licensing Course

1. The pre-licensing course requires 6 hours of classroom instruction covering the topics outlined above under Subsection I, "Program of Instruction/Course Content." No more than 1 1/2 hours (25 percent) of the course may consist of audiovisual instruction. A minimum of 4 1/2 hours (75 percent) shall consist of formalized instruction which may be a combination of lecture, computer format plus classroom discussion. The audiovisuals may include such aids as films, slides or videos specifically designed to supplement the formalized instruction.

2. Six-Hour Curriculum. The 6-hour pre-licensing course shall utilize a condensed version of the 30-hour classroom course and shall cover the basic components of each chapter outlined in the 30-hour classroom course.

3. Comprehensive Summation of Curriculum Chapters and Knowledge Test. Upon completion of the classroom course and review of the chapters, the school shall administer the knowledge test.

4. Eight-Hour Behind-the-Wheel Curriculum. The eight-hour behind-the-wheel curriculum shall be done in the same manner and under the same conditions as provided in §154.D.

5. The driver education certificate of completion shall be completed when a student has attained a minimum score of 80 percent on the knowledge test and a minimum score of 70 percent on the eight-hour behind-the-wheel portion of the course.

AUTHORITY NOTE: Promulgated in accordance with R.S. 32:402.1(A) (1) and R.S. 40:1461.

HISTORICAL NOTE: Promulgated by the Department of Public Safety and Corrections, Office of Motor Vehicles, LR 38:1985 (August 2012), amended LR 38:3235 (December 2012), amended LR 43:1773 (September 2017).

§155. Third-Party Tester/Examiner Requirements

A. R.S. 32:408 requires all driver education providers to become certified as third-party testers. Secondary schools may opt to not perform as third-party testers. All testers/examiners shall:

1. meet all the qualifications in §146;

2. have at least one licensed examiner; and

3. administer the knowledge and road skills tests.

a. At the end of the classroom instruction, the tester/examiner shall administer a knowledge test to each student. The test shall be provided to the examiner by OMV.

b. The tester/examiner shall administer an approved road skills test to an eligible student.

AUTHORITY NOTE: Promulgated in accordance with R.S. 32:402.1(A)(1) and R.S. 40:1461.

HISTORICAL NOTE: Promulgated by the Department of Public Safety and Corrections, Office of Motor Vehicles, LR 38:1989 (August 2012), amended LR 38:3235 (December 2012), repromulgated LR 39:98 (January 2013), amended LR 40:2603 (December 2014), LR 43:1777 (September 2017).

§156. Application Process and Fees for Third-Party Testers/Examiners

A. Each person requesting to be certified by and contract with DPS as a third-party tester shall submit the following:

1. completed third-party tester application for class D and E driver's license;

2. fees as listed in §146.E-F;

3. a certificate of general liability insurance as listed in §157.B.1;

4. a certificate of auto liability insurance as listed in §157.B.1;

5. a completed application for examiner license;

6. a third-party tester route for administering the road skills test to be approved by DPS. The route shall be different from the routes used during any eight-hour behind-the-wheel training.

B. Upon approval of the application, DPS shall offer a contract to the applicant to administer the OMV knowledge test and the road skills test.

C. Each applicant for third-party examiner certification shall:

1. submit an application for third-party examiner;

2. meet the qualifications of an instructor as listed in §145.B and C;

3. submit fees as listed in §146.E-F;

4. attend an examiner training session administered by DPS; and,

5. pass a third-party examiner test administered by DPS.

D. Renewal Application

1. Application packages shall be complete. Any incomplete renewals will be returned.

2. The renewal schedule for third-party testers shall be consistent with driver education provider renewal cycles.

3. The following documents shall be submitted in conjunction with the driver education renewal application:

a. fees as listed in §146.E-F;

b. a certificate of general liability insurance as listed in §157.B.1;

c. a certificate of auto liability insurance as listed in §157.B.1; and

d. a third-party tester contract;

4. any tester that fails to renew his license/contract within six months of license or contract expiration shall be required to begin the initial application process again.

AUTHORITY NOTE: Promulgated in accordance with R.S. 32:402.1(A)(1) and R.S. 40:1461.

HISTORICAL NOTE: Promulgated by the Department of Public Safety and Corrections, Office of Motor Vehicles, LR 38:1990 (August 2012), amended LR 40:2603 (December 2014), LR 43:1777 (September 2017).

§157. General Regulations for Third-Party Testers

A. General Regulations

1. All personnel shall conduct themselves in a professional manner at all times.

2. All third-party examiners shall comply with and abide by all applicable statutes and regulations as well as all terms of the contract executed by the third-party tester or third-party examiner and DPS.

3. The school shall agree to permit DPS representatives to inspect the school and shall make available to DPS, when requested to do so, full information pertaining to the testing operation. Upon request, the school shall provide photo copies of the school's records required by DPS.

4. A representative of the Federal Highway Administration and/or a DPS representative may conduct random examinations, inspections, and audits without prior notice.

5. The facility shall conspicuously display the third-party tester certificate in the business during operational hours.

6. The tester and/or examiner shall not assist a person in obtaining a driver's license by deceptive practices.

7. The tester and/or examiner shall not state or imply that upon completion of the road skills test, the securing of a driver's license is guaranteed or assured.

8. A DPS representative shall biennially take a road skills test administered by the licensed third-party examiner or test a sample of drivers who were examined by the third-party to compare pass/fail results.

9. A third-party tester/examiner shall not administer any road skills tests until authorized to do so by DPS.

10. If at any time, a third-party tester/examiner ceases to meet any requirement imposed by statute, the regulations, or the contract, the third-party tester or third-party examiner shall immediately cease all testing.

11. Each student administered the road skills tests shall be notified, prior to testing, that he is subject to being retested by OMV at any time.

12. Private driving schools shall administer road skills tests to all of the general public. Authorized secondary school driver education program providers shall administer road skills tests only to students enrolled in its school or its driver education program.

13. Each third-party tester shall retain at least one certified third-party examiner in their employ at all times.

B. Safety and Insurance

1. Testers shall furnish DPS satisfactory proof of certificates of liability insurance in the school's name with the school's address. Policy dates on all certificates forwarded to DPS shall be current. Insurance shall be issued from an insurance carrier authorized to do business in Louisiana. For any renewals, changes, cancellations or expirations of the insurance policy, the insurance carrier shall notify OMV. Testers shall maintain the following:

a. general liability insurance policy with minimum liability limits of $1,000,000 per occurrence. All tester addresses shall be listed on the policy;

b. the limits shall be $500,000 in auto liability and identify (by description and vehicle identification number) the vehicle(s) covered. For vehicle qualifications, see §151.F:

i. testers may, at their discretion, use the applicant's vehicle for the road skills test. The vehicle must be covered with liability insurance. Proof of insurance coverage must be presented to the examiner prior to administering the road skills test. Proof of insurance must contain the insurance company's name, policy number, current policy period, description of the vehicle (year, make and VIN) and the applicant may not be an excluded driver.

2. The certificates of liability insurance must list OMV as a certificate holder or additional insured with the following address:

Office of Motor Vehicles
Attn: Training and Certification Unit
P.O. Box 64886
Baton Rouge, LA 70896-4886

3. In the event a driving school is covered under a fleet policy and desires to add another vehicle to its fleet, the driving school shall advise the insurance company to notify DPS.

C. Knowledge Test

1. Passing the final examination in the driver education course shall qualify the student for license/permit issuance. The student must pass the knowledge test with a minimum score of 80 percent.

2. The same knowledge test shall be utilized for those taking the 6-hour pre-licensing course or the 30-hour classroom course.

3. All copies of the test shall be kept under lock and key or password protected at all times. Photocopies of the test should be produced at the completion of the course as needed.

4. The classroom instructor shall ensure that students seated next to each other have different versions of the test to complete.

5. The completed test shall be attached to the certificate of completion for surrender to DPS at the time of license application. Both documents shall be placed in a sealed envelope.

6. Schools and/or instructors that provide students with the answers to the test, teach only the information contained on the test, do not properly secure the tests, and assist a student to pass the final exam by deceptive practices or accept bribes to give a student a passing score shall be subject to having their license/certification revoked.

7. Any student who fails the final exam shall be allowed to re-test once the same day. If the student does not pass the test on the second attempt, the student may return any day thereafter (depending on instructor availability) and re-test twice each day until the test is passed.

8. The tester and/or examiner shall not assist a student pass the final examination by any deceptive practices. Any school or instructor who assists a student shall be subject to having their license/certification revoked.

9. Each student who is administered the final knowledge test shall be notified prior to testing that he is subject to being re-tested by OMV at any time.

10. Lost or stolen knowledge tests shall be reported to OMV immediately. If a theft or suspected theft has occurred, the local law enforcement agency shall also be notified and a police report sent to OMV.

D. Road Skills Testing Preparation Policies

1. Each applicant shall be required to present proof of identity as outlined in OMV's policy along with the completed test history form provided by OMV.

2. The legal custodial/domiciliary parent/guardian of an applicant under the age of 18 shall sign a consent statement, provide proper identification and provide proof that he or she is the legal custodial/domiciliary parent/guardian.

3. All applicants shall sign the Disclosure of Terms Form supplied by OMV. If the applicant is under the age of 18, the legal custodial/domiciliary parent/guardian shall also sign. This form shall be kept in the files.

4. The fee for a road skills test shall not exceed $40. This fee shall cover all expenses including the costs of the original and a copy of the road skills test certificate provided to each applicant.

5. A copy of the certificate shall be placed in the applicant's file and maintained by the tester for a minimum of five years.

6. The examiner may refuse to administer the road skills test at any time he determines the condition of the applicant, roads or weather to be unsafe.

E. Road Skills Testing Administration Policies

1. Only examiners who have been approved and certified by DPS shall administer road skills tests. Only examiners who are certified adaptive driver trainers shall administer road skills tests to applicants who require adaptive equipment, including bioptic telescopic lenses.

2. Only the applicant, examiner, examiner's supervisor, DPS representative, or interpreter, if necessary, are allowed in the vehicle when a road skills test is being administered.

3. Each driving course layout shall include (as a minimum) the following for scoring purposes:

a. two stop signs (one with an obstructed view, if possible);

b. two traffic lights;

c. two lane changes;

d. two intersections, without a turn;

e. two reversal procedures:

i. into and out of a parking space;

ii. three point turn;

f. three left turns, one of which includes a left turn onto a multiple-lane roadway;

g. three right turns, one of which includes a right turn onto a multiple-lane roadway; and

h. one parking maneuver.

4. If a maneuver is not able to be performed within a reasonable driving distance from the testing facility due to

roadway conditions, the maneuver may be omitted from the test route with prior written approval from OMV.

5. During the road skills test, each third-party examiner shall measure the applicant's performance in each of the following operational skills:

a. observing;

b. communicating;

c. speed adjustment;

d. vehicle positioning;

e. time and space judgment; and

f. hazard perception.

6. Standardized instructions shall be utilized when conducting a road skills test.

7. Approved scoring criteria shall be standardized, as determined and approved by DPS. Each applicant starts with 100 points. The applicant shall receive 80 points or better to pass. If the applicant fails due to inexperience, the examiner may recommend a learner's permit.

8. If using a vehicle with a dual brake, it shall be an automatic failure of the test if the examiner has to use the brake for any reason.

9. The driving school shall be required to administer road skills tests to the general public.

10. Third-party testers will set the hours and conditions under which the facility will provide the road skills test.

11. A road skills test shall not be administered to an individual unless the individual is at least of the age of 16 but less than 17 and has held a learner's permit for at least 180 days.

12. If the third party examiner suspects that the person is impaired at the time he presents himself for the administration of a road skills test, the examiner shall not administer the road skills test and the examiner shall promptly report the incident to the OMV.

13. Neither the examiner nor the Third Party Tester employing the examiner shall be liable in any manner to any person who is denied the road skills test except for the refund attributable to the fees charged for a road skills test.

F. Record Keeping

1. The following information shall be maintained in the records, in date order, by month, and shall be maintained for five years from the date of the road skills test:

a. completed application for road skills test (DPSMV2271);

b. completed discourse of terms for applicants (DPSMV2273);

c. completed road skills driving test (DPSMV2005A);

d. completed test history form (DPSMV30059) furnished by DPS, if applicable; and

e. completed road skills test certificate (DPSMV2272), if applicable.

2. Every third-party tester shall maintain an ascending numerical accounting record of all certificates issued. Every tester will self-issue certificate numbers for each road skills test in the manner prescribed by DPS.

3. A road skills test log shall be maintained with the tester files. The examiner will record each road skills test including the applicant's name, the examiner's name, the time in/out for the test and indicating whether the test was passed or failed.

4. Every third-party tester shall maintain a monthly report of skills tests performed which shall include:

a. the number of road skills tests;

b. the monthly log;

c. the vehicle inspection form; and

d. applications for road skills tests.

5. The six month reports shall be submitted to OMV biennially by the 10th of January and the 10th of July.

6. In secondary school programs, if oversight for the driver education program is provided at the system level, the system shall determine the location where the records shall be kept. All records shall be maintained at a central location which provides DPS access during daytime hours.

7. All records and necessary data pertaining to the operation of the tester shall be maintained in the office in chronological month order and shall be available for inspection upon request by any law enforcement officer or DPS representative. All records shall be maintained in hard copy (original) for one year and may be transferred to an electronic after the one-year period.

G. Road Skills Test Certificate (DPSMV2272) Requirements

1. Road skills test certificates shall be issued only to applicants who complete a road skills test with an approved third-party tester.

2. If an applicant does not pass the road skills test, a certificate may be issued with comments to add an "02" restriction for issuance of a learner's permit only.

3. Lost or stolen road skills test certificate forms shall be reported to OMV immediately. The local law enforcement agency shall also be notified and a police report submitted to OMV.

AUTHORITY NOTE: Promulgated in accordance with R.S. 32:402.1(A)(1), R.S. 32:408.1, and R.S. 40:1461.

HISTORICAL NOTE: Promulgated by the Department of Public Safety and Corrections, Office of Motor Vehicles, LR 38:1990 (August 2012), amended LR 38:3235 (December 2012), LR 40:2603 (December 2014), LR 43:1778 (September 2017), LR 45:1603 (November 2019).

§158. Military Exemption [Formerly §159]

A. Any active duty military person who never been licensed in this state or another state, upon proving his active duty status, may submit proof of completion of military driver training, which is essentially equivalent to the training required in this Part, in lieu of providing the certificate of completion required by this Part.

AUTHORITY NOTE: Promulgated in accordance with R.S. 32:402.1(A)(1), R.S. 32:408.1, and R.S. 40:1461.

HISTORICAL NOTE: Promulgated by the Department of Public Safety and Corrections, Office of Motor Vehicles, LR 38:3235 (December 2012), amended LR 43:1780 (September 2017).

§159. Suspension, Revocation and Penalty Assessment

A. All regulations outlined in this Chapter shall be adhered to by the driving school and its employees. DPS may fine, suspend or revoke any driving school license, instructor license, examiner license, owner license or third-party tester agreement issued under these rules and regulations upon discovery of satisfactory evidence of violations. If the violation involves the owner of the driving school or other management staff, then the driving school may be assessed fines, or the license may be suspended or revoked, or both. If the violation involves the instructor, then the instructor may be assessed fines, or the license may be suspended or revoked, or both. Fines may be assessed up to $1500 per rule or statute violated. If the fine is not paid within 30 days of the mailing of the notice of the fine, the license may be suspended or revoked.

1. Any instructor whose driving privileges have been suspended or revoked is subject to having his instructor's license suspended or revoked.

2. Any behind-the-wheel instructor who has been arrested for driving while intoxicated or operating a vehicle while under the influence of alcohol or drugs, shall be immediately suspended and shall remain suspended until a final disposition of the charges are received by DPS.

3. The license of any instructor arrested for any crime enumerated in R.S. 15:587.1(C) (the Child Protection Act) shall immediately be suspended and shall remain suspended until a final disposition of the charges are received by DPS.

4. Instructors who are arrested and indicted, or both, for any disqualifying offense listed in Section 145 shall be suspended and their license will remain suspended until final disposition of the offense has been received by DPS.

5. In the event a driving school owner's license or a driving school instructor's license issued pursuant to this Chapter is revoked, he shall not be involved in the administrative duties of the school.

6. Each school shall respond to the findings in the compliance review as to how the school shall correct the violations within the prescribed time stated in the compliance review. The response may be sent via email.

B. Appeal Rights

1. Notice of Suspension, Revocation or Fine

a. A currently licensed owner/instructor whose license and third-party tester agreement is revoked or suspended shall be notified in writing by DPS either by email or mail.

2. General Provisions

a. Except as otherwise provided by these rules, any notice shall be served by certified mail, return receipt requested, or hand delivered to the permanent address that is provided in the application or latest amendment thereto, on file with DPS. Notice shall be presumed to have been given in the event an incorrect or incomplete address is supplied to DPS by the applicant or if the applicant fails to accept properly addressed certified mail.

b. Any fine levied by DPS which is adjudicated to a final administrative judgment shall be paid within 10 business days of said judgment becoming final. Failure to pay such a fine within 10 business days may serve as grounds to suspend or revoke any license or contract under this Part.

c. In cases of serious violations of the law or these rules, or in situations in which the law calls for prompt suspension or revocation, or violations which present a danger to the public health, safety or welfare, DPS may provide notice. Such notice shall be promptly documented and confirmation in writing shall be provided to the applicant.

d. Any request for an administrative hearing for a fine, suspension or revocation of a license or third-party tester agreement shall be made in writing and sent to DPS (Training and Certification Unit, P.O. Box 64886, Baton Rouge, LA 70896) within 30 calendar days. The action and/or penalty shall become final if the request for an administrative hearing is not submitted timely.

AUTHORITY NOTE: Promulgated in accordance with R.S. 32:402.1(A) (1) and R.S. 40:1461.

HISTORICAL NOTE: Promulgated by the Department of Public Safety and Corrections, Office of Motor Vehicles, LR 43:1780 (September 2017), amended LR 45:1604 (November 2019).

§161. Digitized Driver's License or Special ID Card

A. As used in this Section, digitized driver's license shall have the meaning assigned to it as in Title 32 of the 1950 *Louisiana Revised Statutes*.

B. As used in this Section, a *digitized special identification card* shall mean a data file available on any mobile device which has connectivity to the internet through an application that allows the mobile device to download the data file from the department or an authorized representative of the department and contains all of the data elements visible on the face and back of the special identification card, displays the current status of the identification card that complies with the standard of REAL ID. For purposes of the Subparagraph, "current status" shall include but is not limited to valid, expired, or cancelled. A digital copy, photograph, or image of a special identification card which

is not downloaded through the application on a mobile device shall not be considered a valid digitized special identification card as provided by this Subsection.

C. A licensee may obtain a digitized driver's license or special identification card by purchasing the digitized driver's license or special identification card application from the department or its authorized representative. The fee to initially install the application to display a digitized driver's license or special identification card on a mobile device shall be $6. The $6 fee will also be charged if the holder of a driver's license or special identification card desires to continue using the application upon renewal of the credential.

D. The application shall be installed upon initial purchase and upon renewal of a driver's license or special identification card.

E. The number of active applications per driver's license or special identification card is limited to one unless the capability to add additional devices is approved by the commissioner.

F. In the case of lost, stolen, or replaced mobile devices, the holder of a digitized driver's license or special identification card shall re-assign the application to another mobile device and terminate use of the application on the lost, stolen, or replaced mobile device.

G. The licensee utilizing the digitized driver's license or special identification card is responsible for the successful operation of the application. If the person to whom the licensee is presenting the digitized driver's license or special identification card to is unable to read the digitized driver's license or special identification card, it will be as if the licensee did not present a driver's license at all.

H. Acceptance of the digitized driver's license or special identification card by individuals, businesses, and governmental entities is subject to the applicable state and federal laws.

AUTHORITY NOTE: Promulgated in accordance with R.S. 32:411(F)(1) and (3)(d) and (f) and R.S. 40:1321(B).

HISTORICAL NOTE: Promulgated by the Department of Public Safety and Corrections, Office of Motor Vehicles, LR 43:1419 (July 2017), amended LR 44:2021 (November 2018).

Subchapter B. Reciprocity Agreements with Foreign Countries

§171. General

A. The department may enter into reciprocity agreements with a foreign country which would allow citizens of that foreign country to apply for and be issued a Louisiana driver's license without having to take the written test and the skills test. Similarly, citizens of Louisiana would be able to apply for and be issued a driver's license in the same foreign country without having to take a written test or a skills test, or in the alternative, the foreign country may allow the Louisiana resident to drive in the foreign country with the Louisiana driver's license.

B. The deputy secretary of Public Safety Services may sign the reciprocity agreement on behalf of the department. A duly authorized representative of the foreign government may sign the agreement on behalf of the foreign government.

C. Prior to entering into such a reciprocity agreement, both parties shall undertake a review process of the other party's licensing requirements to determine that the licensing requirements are compatible. The nature, scope and extent of the review shall be at the sole discretion of the party conducting the review. The parties may enter into the reciprocity agreement only if both parties determine the licensing requirements of both parties are compatible.

D. The reciprocity agreement shall specify the rights and obligations of both parties. To the extent the laws of Louisiana regarding public contracts are applicable to the reciprocity agreement, the reciprocity agreement shall be subject to those laws.

E. The reciprocity agreement shall provide that any action against the state or the department, or both, arising out of the reciprocity agreement, shall be brought in the Nineteenth Judicial District Court for the Parish of East Baton Rouge.

F. The reciprocity agreement shall provide that all persons who are issued a Louisiana driver's license pursuant to the agreement shall be subject to all criminal, civil, and administrative laws governing the operation of a motor vehicle including, but not limited to, laws regulating traffic on public highways, roads and streets, the Implied Consent Law, the compulsory automobile liability insurance law, and the vehicle registration and titling laws. The reciprocity agreement shall also provide that persons issued driver's licenses pursuant to the agreement shall be subject to sanctions for violating state laws and rules promulgated pursuant to state law in the same manner as residents of the state of Louisiana.

AUTHORITY NOTE: Promulgated in accordance with R.S. 32:404(F).

HISTORICAL NOTE: Promulgated by the Department of Public Safety and Corrections, Office of Motor Vehicles, LR 24:1316 (July 1998).

§173. Application for a Driver's License Pursuant to a Reciprocity Agreement; Graduated Driver's License; Reports of Driver Condition or Behavior

A. Only in those cases in which a foreign country has entered into a reciprocity agreement with the department, may a citizen of that foreign country apply for a Louisiana driver's license pursuant to a reciprocity agreement. The application shall be on a form approved by the department for an application for a driver's license. The person shall meet all the requirements contained in state law regarding eligibility for a driver's license, except that the person applying pursuant to the reciprocity agreement does not have to take the written or the road skills test.

B. Regardless of the nature of the license from the foreign country, a person under the age of 17 must comply with the graduated license requirements in order to obtain a driver's license.

C. Nothing in these rules shall be construed as prohibiting the department from requiring a person licensed pursuant to a reciprocity agreement from submitting to a special examination in the event the department receives a report of driver condition or behavior. If the department receives such a report, the department may require the person to submit to any examination that would be required of a Louisiana resident including a medical examination, a written test or a road skills test. The department may suspend or revoke any such driver's license if the person does not successfully complete the special examination.

D. The person applying for a Louisiana driver's license pursuant to a reciprocity agreement shall present a valid driver's license from his country. The person shall be required to keep the license from his country valid during the entire time he possesses a Louisiana license. If at any time, the person has his foreign country driver's license suspended, canceled, or revoked, he shall immediately surrender his Louisiana driver's license and cease operating a motor vehicle in Louisiana.

E. The person applying for a Louisiana driver's license pursuant to a reciprocity agreement shall sign a statement in which the person agrees to be bound by the terms of the reciprocity agreement and the rules contained in this Chapter.

AUTHORITY NOTE: Promulgated in accordance with R.S. 32:404(F).

HISTORICAL NOTE: Promulgated by the Department of Public Safety and Corrections, Office of Motor Vehicles, LR 24:1316 (July 1998).

§175. Revocations, Suspensions; Compact State

A. A person who has a revoked or suspended Louisiana driver's license, or who has been denied a Louisiana driver's license because of failure to meet a statutory qualification, shall neither apply for, nor be issued, a driver's license pursuant to a reciprocity agreement.

B. A person who has a driver's license suspended or revoked by a state which is a member of the driver's license compact, shall neither apply for, nor be issued, a driver's license pursuant to a reciprocity agreement.

C. In those cases described in either §175.A or B in which the driver's license has been suspended or revoked, the person must clear all suspensions or revocations before being eligible to apply for a driver's license pursuant to a reciprocity agreement.

AUTHORITY NOTE: Promulgated in accordance with R.S. 32:404(F).

HISTORICAL NOTE: Promulgated by the Department of Public Safety and Corrections, Office of Motor Vehicles, LR 24:1317 (July 1998).

§177. Effective Dates of Reciprocity Agreements; Policy and Procedure Statements

A. All reciprocity agreements shall provide for an effective date and a termination date. The reciprocity agreement may provide for automatic renewals at the end of the specified term, but the agreement shall state that either party may choose not to renew the reciprocity agreement upon 60 days' written notice to the other party. All licenses issued pursuant to a canceled reciprocity agreement shall be revoked 30 days after a public announcement of the cancellation of the reciprocity agreement, or upon the expiration of the 60 days after the issuance of the written notice of cancellation, whichever is longer.

B. In the event of an imminent threat to the public health, safety, or welfare, either party may suspend a reciprocity agreement upon written notice to the other party. If a reciprocity agreement is suspended, no new driver's licenses and no renewals of driver's licenses shall be issued pursuant to the reciprocity during the period of suspension. The party suspending the reciprocity agreement shall specify the duration of the suspension, or specify that the suspension is indefinite.

C. Any new reciprocity agreement, or any amendment to a reciprocity agreement shall not take effect until sufficient time has been given for the department to implement any necessary changes to its policies and procedures.

AUTHORITY NOTE: Promulgated in accordance with R.S. 32:404(F).

HISTORICAL NOTE: Promulgated by the Department of Public Safety and Corrections, Office of Motor Vehicles, LR 24:1317 (July 1998).

§179. Commercial Driver's Licenses; Class of License

A. A commercial driver's license, Class "A," "B," or "C," shall not be issued pursuant to any reciprocity agreement.

B. Except as provided in §179.A, the class of license issued by the department pursuant to a reciprocity agreement shall be of the same class or of a similar class of license issued by the foreign country.

AUTHORITY NOTE: Promulgated in accordance with R.S. 32:404(F).

HISTORICAL NOTE: Promulgated by the Department of Public 195Safety and Corrections, Office of Motor Vehicles, LR 24:1317 (July 1998).

§181. Declaratory Orders

A. Any person desiring a ruling on the applicability of any statute, or the applicability or validity of any rule, to the regulation of the reciprocity agreements with foreign countries for the issuance of driver's licenses shall submit a written petition to the assistant secretary. The written petition shall cite all constitutional provisions, statutes, ordinances, cases, and rules which are relevant to the issue presented or which the person wishes the assistant secretary to consider prior to rendering an order or ruling in connection with the petition. The petition shall be typed, printed or written legibly, and signed by the person seeking the ruling or order. The petition shall also contain the

person's full printed name, the complete physical and mailing address of the person, and a daytime telephone number.

B. The assistant secretary may request the submission of legal memoranda to be considered in rendering any order or ruling. The assistant secretary or his designee shall base the order or ruling on the documents submitted including the petition and legal memoranda. If the assistant secretary or his designee determines that the submission of evidence is necessary for a ruling, the matter may be referred to a hearing officer prior to the rendering of the order or ruling for the taking of such evidence.

C. Notice of the order or ruling shall be sent to person submitting the petition as well as the persons receiving notice of the petition at the mailing addresses provided in connection with the petition.

D. The assistant secretary may decline to render an order or ruling if the person submitting the petition has failed to comply with any requirement in this Section.

AUTHORITY NOTE: Promulgated in accordance with R.S. 32:404(F) and R.S. 49:962.

HISTORICAL NOTE: Promulgated by the Department of Public Safety and Corrections, Office of Motor Vehicles, LR 24:1317 (July 1998).

Subchapter C. Third-Party Knowledge and Skills Testing for Class "D" and "E"

§185. Eligibility, Application, Contract

A. All persons seeking to contract with the department to administer the written knowledge test and the driving or skills test pursuant to R.S. 32:408 shall meet the following requirements:

1. successfully complete an OMV sanctioned examiners course;

2. have attained the age of 21 years;

3. have a high school diploma or its equivalent;

4. have a valid driver's license issued by the department for the class of vehicle for which the applicant will administer the written knowledge test and the driving or skills test;

5. no third party examiner shall have been convicted of any felony or misdemeanor which would reflect unfavorably himself, or his employer or the state of Louisiana. Such offenses would include, but are not limited to any offense which has as an element, fraud, deceit, theft, false swearing, making false statement, or injuring public records, or any traffic offense requiring the suspension of a driver's license.

6. an examiner shall meet all requirements for a behind the wheel instructor LAC 55:III.145.C;

7. not be convicted of any crime enumerated in R.S. 15:587.1(C) (the Child Protection Act).

B. Any person seeking to contract with the department to administer the written knowledge and driving or skills test shall submit an application on an approved form attaching all documents and information required by R.S. 32:408 and LAC 55, Part III, Chapter 1, Subchapter C.

C. All contracts shall have a term of two years. Contracts shall be renewed by December 31 on the year stated. If the completed application including all fees is not received by December 31, the contract shall expire.

D. As with any contract, contracts confected pursuant to LAC 55, Part III, Chapter 1, Subchapter C, are renewable at the discretion of the department.

AUTHORITY NOTE: Promulgated in accordance with R.S. 32:408 and R.S. 32:408.1.

HISTORICAL NOTE: Promulgated by the Department of Public Safety and Corrections, Office of Motor Vehicles, LR 27:1928 (November 2001), amended LR 40:2603 (December 2014).

§187. Compliance

A. All third party examiners must comply with and abide by all applicable statutes and regulations as well all terms of the contract executed by the third party tester or third party examiner and the department.

B. A third party tester and a third party examiner shall not begin administering the written knowledge test or skills test until authorized to do so by the department.

C. If at any time, a third party tester or a third party examiner ceases to meet any requirement imposed by statute, the regulations, or the contract, the third party tester or the third party examiner shall immediately cease all testing authorized in the contract.

D. All third party examiners shall grant to any authorized personnel of the Department of Public Safety and Corrections the right to conduct random examinations, inspections, or audits of the records, premises, and equipment of the third party tester and the third party examiner without prior notice during business hours for compliance. Personnel of the Department of Public Safety and Corrections shall at least biennially take the tests actually administered by third party examiners as if the employee were a test applicant, or the department shall at least biennially test a sample of drivers who were examined by the third party examiner to compare pass/fail results.

E. The Third Party Tester and the Third Party Examiners shall utilize only forms, visual testing devices, computer/printer equipment, image capture equipment approved by the Department of Public Safety and Corrections, Office of Motor Vehicles.

F. The third party tester and the third party examiners shall maintain at its place of business a record of each applicant for whom a third party examiner has conducted an application, written test, visual examination, and the driving or skills test for a minimum of five years. Each such record shall include:

1. the applicant's name;

2. date of birth;

3. the date each test was administered;

4. the score obtained by the applicant;

5. the score sheets for each test conducted;

6. the name and address and certificate number of the third-party examiner administering said tests; and

7. the make/model/license plate number of any vehicle used to conduct the testing.

G. The third party tester shall maintain at each place of business for a minimum of five years, a record of each certified third party examiner in the employ of the third party tester to include:

1. a copy of the examiner's license issued by the State of Louisiana, Department of Public Safety;

2. a copy of the examiner's driving record, updated annually from the date of employment;

3. evidence of payroll employment status of the examiner;

4. copies of all third party examiner records, including the tests administered by the examiner.

H. All third party examiners shall submit to and receive approval from the Department of Public Safety and Corrections, Office of Motor Vehicles of a test route for use in the administration of skills testing to driver applicants for each location approved by the department.

I. Third party testers and third party examiners shall not charge a driver/applicant a fee for the administering of the knowledge and skills test in excess of $40.

J. Third party testers and third party examiners shall post in a conspicuous place within its premises the certificate authorizing the third party examiner to administer the written knowledge and driving or skills test.

K. Each third party tester and third party examiner shall utilize a department-approved written test, through approved computer linking, to ensure all written tests are electronically controlled and all results are electronically recorded through the department database.

L. In the administration of the driving or skills examination, each third party examiner shall measure the performance of the applicant in each of the following operational skills: observing, communicating, speed adjustment, vehicle positioning, time and space judgment, and hazard perception. In addition, each driving course layout shall include the following driving maneuvers, as a minimum, for scoring purposes:

1. two stop signs (one with obstructed view, if possible);

2. two traffic lights;

3. two lane changes;

4. two intersections, without turn;

5. two reversal procedures. Options:

a. into a parking spot and out of the parking spot; or

b. three point turn;

6. three left turns, one of which includes a left turn onto a multiple-lane roadway;

7. three right turns, one of which includes a right turn onto a multiple-lane roadway;

8. one quick stop;

9. one parking maneuver.

M. The scoring criteria shall be standardized, as determined and approved by the department.

N. Third party testers and third party examiners shall maintain a minimum limit of automobile liability insurance coverage of $500,000 per occurrence in connection with the skills test. Third party testers and third party examiners shall also maintain a minimum general liability policy of $1,000,000 per occurrence. These policies shall provide primary coverage to the state of Louisiana, the department, and the department's employees.

AUTHORITY NOTE: Promulgated in accordance with R.S. 32:408 and R.S. 32:408.1.

HISTORICAL NOTE: Promulgated by the Department of Public Safety and Corrections, Office of Motor Vehicles, LR 27:1928 (November 2001), amended LR 29:604 (April 2003), LR 40:2603 (December 2014).

Chapter 2. Administrative Procedure

§201. Suspension, Revocation or Cancellation of License, Administrative Hearings

A. The following administrative regulations shall apply to all hearings conducted under the statutory authority of the secretary of the Department of Public Safety and Corrections and which concern matters arising out of actions taken by the state police or the Office of Motor Vehicles.

1. Renewal. All administrative hearings shall be public and shall be conducted in accordance with the provisions of the Louisiana Administrative Procedure Act (R.S. 49:950 et seq.) and the rules set forth herein.

2. Control of Hearings. All administrative hearings will be conducted and controlled by an administrative law judge or the chief administrative law judge.

3. Notice. The Secretary of Public Safety Services or his representative shall give notice of the time and place of all administrative hearings not less than 10 days in advance of the hearing date. He shall give such notice to all persons whose pecuniary interest is to be directly and immediately affected by such hearing.

4. Mailing Address. The notice of hearing shall be mailed to the party requesting the hearing at the last known address provided to the department.

5. Assignment of Hearing; Discovery; Expert Witnesses

a. Each hearing shall be assigned for a specific time, date and place to an individual administrative law judge.

b. Except for implied consent cases, discovery may be obtained by written agreement between the parties, provided that such discovery does not interfere with or postpone a scheduled hearing date. Due to the time constraints placed by law on suspension of driver's licenses, discovery in implied consent hearings will be confined to inspection or copying of the documents in the prima facie case presented by the state. Any interested person may inspect or copy any documents in the case file after it has been supplied to the presiding administrative law judge. Otherwise, documents may be inspected or copied by request made to any other section within the department upon compliance with the rules of that section. Copies may be made by means of any copying device supplied by the person desiring copies.

c. Expert witnesses may be subpoenaed at the request of any party upon receipt of a money order, cashier's check or attorney check, made payable in the name of each expert witness in whatever amount has been agreed to between the party requesting the subpoena and the witness. The request to subpoena the expert witness should accompany the request for the hearing, but in any case must be made in writing addressed to the Administrative Hearing Section, postmarked or received at least 15 days prior to the date fixed for hearing, and must provide the full name and address of the witness to whom the subpoena is to be directed, plus a summary of the opinion testimony expected to be adduced.

d. The administrative law judge shall evaluate the qualifications of the witness prior to being accepted as an expert and prior to any testimony being taken.

6. Summary Disposition

a. At any time after scheduling, a written request may be filed by any interested party for summary disposition thereof on any of the following grounds:

i. that the administrative law judge lacks jurisdiction over the subject matter, or over the person against whom relief is sought;

ii. that the notice of hearing has not been made in the required manner or within the prescribed period of delay;

iii. that the action has become moot;

iv. that a party has failed to appear at the time fixed for hearing, without having been granted a continuance;

v. that the written notice of hearing expressing the cause of action does not constitute a ground for revocation or suspension.

b. Any request for summary disposition, when made prior to the date fixed for hearing, may be supported by admissions of fact and written argument or briefs.

c. If the administrative law judge conducting the hearing denies the request or refers it to the merits, he may reconsider same at any time prior to final disposition of the action.

d. The administrative law judge conducting the hearing may, at any time summarily dispose of an appeal or action on any of the grounds listed in Paragraph 1 above.

7. Location of Hearings. The hearings shall be conducted in a place convenient and accessible to the public, selected by the secretary. With the consent of the secretary, his representative, the chief administrative law judge or the administrative law judge, the parties may agree to any place of public accessibility within the state of Louisiana for any hearing.

8. Continuance or Reschedule of Hearings

a. Once a hearing has begun, it may be continued without prejudice to either party:

i. by the secretary or the chief administrative law judge upon submission of justification deemed adequate by them;

ii. by the administrative law judge conducting the hearing for cause deemed sufficient at that time; or

iii. if time does not permit completion of the hearing on the scheduled date.

b. A hearing may, when proven necessary, be rescheduled by the administrative law judge, with the approval of the chief administrative law judge.

c. No continuances of scheduled administrative hearings shall be granted except for compelling cause or to serve the ends of justice.

9. Representation of Parties. All parties shall have the right to be represented by counsel, but shall not be required to be so represented. Any such counsel representing a party to an administrative hearing must be duly licensed to practice law in the state of Louisiana. When any party is represented by more than one attorney in any hearing, only one attorney for any such party shall be permitted to examine the same witness.

10. Evidence. The admissibility of evidence submitted at any administrative hearing shall be governed by the Louisiana Administrative Procedure Act (R.S. 49:950 et seq.). Departmental records, papers, documents and other written exhibits may be offered in evidence at the hearing by either a representative of the agency involved or by documentary submission by the agency involved. All such evidence shall be available for inspection by all parties. All testimony adduced at the administrative hearing will be recorded and shall be taken under oath.

11. Written Statements. Affidavits or other ex-parte statements may be received in evidence in an administrative hearing; however, all parties shall be given an opportunity to inspect such statements prior to their admission into the record.

12. Stipulation. The parties may be required by the administrative law judge to stipulate to any or all undisputed facts.

13. Corroboration. The presentation of corroborative evidence may be limited by the administrative law judge conducting the hearing in the event same is merely repetitive or relevant.

14. Sequestration. The administrative law judge conducting the administrative hearing, whether or not at the request of any party, may order that the witnesses in any such hearing be sequestered so as to preclude any witness from hearing the testimony of any other witness.

15. Oral Argument. The administrative law judge conducting the hearing may limit the total time to be allowed for oral argument, according to the circumstances of each case. Except with special leave, only one attorney may be permitted to present oral argument for any party to an administrative hearing. Any party may request leave of the administrative law judge to submit written arguments at the conclusion of a hearing within a time limit to be specified by the administrative law judge. A copy of all such written arguments must be served on all parties, or on their counsel, and shall be certified by the writer.

16. Subpoena of Witnesses and Production of Documents

a. The administrative law judge, chief administrative law judge, the secretary or his representative shall have the power to compel the appearance of witnesses and the production of documents, books and papers pertinent to the issues involved in any administrative hearing, provided such witnesses, documents, books and papers are within the state of Louisiana.

b. Any party desiring the issuance of a subpoena for any witness at an administrative hearing must apply for it in writing properly addressed to the Administrative Hearing Section, postmarked or received at least 15 days prior to the date fixed for the hearing and must provide the full name and address of the witness to whom the subpoena is to be directed, specifying the purpose for which such witness is subpoenaed. Each such request must be accompanied by a money order, certified check or check drawn on the account of an attorney made payable to the order of the witness whose presence is requested in the amount of $15 for each witness who is not a law enforcement officer or $25 for each witness who is a law enforcement officer for issuing said subpoenas.

c. Any party desiring the production of books, papers or other documents at any administrative hearing must apply for an appropriate order in writing properly addressed to the Administrative Hearing Section, and postmarked or received at least 15 days prior to the date fixed for the hearing. Such application must describe the items to be produced in sufficient detail for identification and must give the full name and address of the person required to make such production, and must state briefly the purposes for which the items are being subpoenaed. All such requests must be accompanied by a money order, certified check or check drawn on the account of an attorney made payable to the department in the amount of $15 for each person or entity which is requested to produce said documents at the hearing.

d. Authentic copies of books, papers or other documents in the custody of any department, board or agency of the state, or any subdivision thereof, which have been subpoenaed may be admitted in evidence with the same effect as the originals.

e. The administrative law judge, chief administrative law judge, the secretary or his representative, for cause deemed sufficient, may issue an appropriate order at any time recalling any subpoena, subpoena duces tecum or request issued under the provisions of this rule.

f. No subpoena or subpoena duces tecum or request for production of documents shall be issued until the party who requests the subpoena of said documents first deposits with the department a sum of money sufficient to pay all of the fees and expenses of issuing said subpoenas set forth in Subparagraphs b and c above.

17. Non-Appearance. If a party fails to appear at the place and time fixed for any hearing, the hearing may be dismissed or the administrative law judge conducting said hearing may, in his discretion, continue the case or proceed with the hearing and render a decision upon such evidence as may be adduced at said hearing.

18. Interlocutory Ruling

a. Formal exceptions to any interlocutory rulings or orders are unnecessary if, at the time the ruling is made or the order is communicated, the party objecting shall make known via objection and the grounds therefor on the record.

b. The administrative law judge conducting the administrative hearing may at any time prior to a final decision, recall, reverse or revise any interlocutory ruling or order made in connection with the hearing.

19. Decision. Within a reasonable time following the conclusion of an administrative hearing, the administrative law judge shall make a written decision containing findings of fact and conclusions of law. The decision of the administrative law judge shall be final 10 days after the date of the notice of decision by the department, unless a timely request for rehearing, reopening or reconsideration is received. Copies shall be furnished to all interested parties.

20. Rehearings

a. Any administrative decision rendered shall be subject to reopening, rehearing or reconsideration by written application to the Department of Public Safety and Corrections postmarked or received within 10 days from the date of mailing of the notice of decision by the department. The grounds for any such rehearing, reopening or reconsideration shall be either that:

i. the decision is clearly contrary to the law and the evidence adduced;

ii. a party has discovered, since the hearing, evidence material to the issues presented which could not have, with due diligence, been obtained prior to the hearing;

iii. there is a convincing showing that issues not previously considered should be examined in order to properly dispose of the issues raised; or

iv. there are other good grounds for further reconsideration of the issues and the evidence, in the public interest.

b. A rehearing, reopening or reconsideration of an administrative hearing may be granted only by the chief administrative law judge, the secretary or his representative.

c. An application for a rehearing, reconsideration or re-opening shall set forth the grounds which justify such action. Nothing in this Section shall prevent a rehearing, reopening or reconsideration of a matter by the department in accordance with any statutory provisions applicable, or on account of any fraud practiced by the prevailing party or by the use of perjured testimony or fictitious evidence. Any hearing upon an application for reconsideration, rehearing or reopening shall be strictly confined to the issues raised in such application. If an application for reconsideration, rehearing or reopening has been denied, the period within which judicial review must be sought shall run from the date of the notice of denial.

21. Appeal Costs. In all instances where judicial review of a final decision is sought by a party from any administrative hearing, the secretary shall require the party appealing to deposit with the Department of Public Safety and Corrections all costs of preparing a transcript of the hearing. The cost of the transcript shall be the sum of $50 per recorded side of each standard cassette utilized in recording the hearing. These costs must be paid by the appellant-party before preparation of the transcript will be requested by the department.

22. Recusation. The administrative law judge conducting an administrative hearing shall withdraw from any adjudicative proceeding in which he cannot accord a fair and impartial hearing or other consideration or which he has a conflict of interest. Any party may request a disqualification of such administrative law judge by filing an affidavit setting forth the succinct grounds therefor. Said application for disqualification may be determined ex-parte by the chief administrative law judge or the secretary or, may be determined at a hearing to be conducted contradictorily with the department.

AUTHORITY NOTE: Promulgated in accordance with R.S. 32:408 et seq.

HISTORICAL NOTE: Promulgated by the Department of Public Safety and Corrections, LR 15:1095 (December 1989), amended LR 17:971 (October 1991).

Chapter 3. License Plates and Removal of Plates, Registrations, and Title Transactions

Subchapter A. Types of License Plates and Removal of Plates

§300. Issuance of Plates

A. Unless otherwise provided in law, all special plates shall be assessed the handling charge imposed in R.S. 47:463(A)(3)(a) and the handling fee imposed in R.S. 32:412.1.

B. Unless otherwise provided in law, a replacement plate for lost plate, and all duplicate registrations, shall be assessed the respective charges for each as provided in R.S. 47:472.

AUTHORITY NOTE: Promulgated in accordance with R.S. 47:463(A)(3)(a), R.S. 32:412.1 and R.S. 47:472.

HISTORICAL NOTE: Promulgated by the Department of Public Safety and Corrections, Office of Motor Vehicles, LR 40:2602 (December 2014).

§301. Shriner Plates

A. Eligibility. Applicants for special Shriner license plates shall include any member in good standing of a shrine organization. Such plates shall be issued for the following types of motor vehicles, provided they are painted in the shrine colors and used by the member or the organization in shrine parades or for other escort services:

1. private passenger automobiles;

2. private passenger pick-up trucks up to 6,000 pounds;

3. private use vans which qualify for automobiles or minimum use pick-up truck plates;

4. private buses and recreational vehicles;

5. commercial vehicles operated for private use only;

6. motorcycles and motorized bicycles;

7. trailers.

B. Place of Application. Applications for issuance of Shriner license plates shall be made at the:

Vehicle Registration Bureau
109 South Foster Drive
Baton Rouge, Louisiana

or through the mail by writing to the:

Department of Public Safety
Vehicle Registration Bureau
Special Services, Box 66196
Baton Rouge, Louisiana 70896.

C. Application. All applications for issuance or transfer of Shriner license plates shall be made on prescribed Department of Public Safety Vehicle Registration (DPSVR) forms. Applications must be accompanied by proof of the applicant's status as a Shrine member in good standing and

proof that his vehicle qualifies. Such proof shall be made by means of an affidavit signed by the recorder of the temple to which the applicant belongs. If the vehicle is not registered in the applicant's name, he must submit proper title documentation and fees along with the request for special plate.

D. Fees. The fee for issuance of a Shriner license plate shall be $15. The plate shall be issued for the life of the vehicle. The fee for transferring such plate to a subsequent owner of a vehicle shall be $5. Each subsequent owner will also be required to submit proof of his status as a member in good standing of a Shrine organization.

E. Cancellation. Shriner license plates displayed on vehicles other than those to which the plates are issued are subject to immediate cancellation, and all such vehicles are subject to the full registration fees prescribed by law. If the Shriner no longer wishes to display the plate on his vehicle or becomes unqualified for the license plate, that plate must be returned for cancellation to the Department of Public Safety, Vehicle Registration Bureau at the address stated in Subsection B above, and a numerical plate must be purchased for the vehicle.

F. Replacement. If the Shriner license plate is lost or stolen, application for a replacement license plate may be made by executing the prescribed DPSVR form and submitting it with a photocopy of the registration certificate and a $2 fee.

AUTHORITY NOTE: Promulgated in accordance with R.S. 47:463.9.

HISTORICAL NOTE: Promulgated by the Department of Public Safety, Office of Motor Vehicles, LR 6:283 (June 1980).

§303. Public Service Commission Plates

A. Eligibility. All incumbent members of the Public Service Commission are eligible to apply for Public Service Commission (PSC) license plates. Such plates may be issued for any private passenger automobile or private use van which would qualify for a regular-issue automobile license plate.

B. Place of Application. Applications for issuance of PSC license plates shall be made at the:

Vehicle Registration Bureau
Special Services, Box 66196
Baton Rouge, Louisiana 70896

C. Application. All applications for issuance or transfer of PSC license plates shall be made on prescribed Department of Public Safety Vehicle registration (DPSVR) forms. Applications must be accompanied by a form DPSVR 1631 executed before a notary public and approved by the division of administration. If the vehicle is not registered in the applicant's name, he must submit proper title documentation and fees along with the request for special license plates.

D. Fees. There shall be no charge for the initial issuance of a PSC license plate. The plate can be transferred from one vehicle to another upon payment of a $3 transfer fee. The plates are subject to regular renewal requirement and each renewal application must be accompanied by a Form DPSVR 1631 executed before a notary public and approved by the division of administration.

E. Cancellation. Public Service Commission license plates are subject to immediate cancellation for any of the following reasons:

1. the plate is displayed on a vehicle other than the one for which it was issued;

2. the commissioner no longer wishes to display the plate on his vehicle;

3. the successor commissioner does not want to display the plate on the vehicle.

F. Replacement. If the PSC license plate is lost or stolen, the commissioner may apply for a replacement plate by executing the prescribed DPSVR form and submitting that form along with a photocopy of the registration certificate and a fee of $2 to the Vehicle Registration Bureau in the manner in which applications are made.

AUTHORITY NOTE: Promulgated in accordance with R.S. 49:952.

HISTORICAL NOTE: Promulgated by the Department of Public Safety, Office of Motor Vehicles, LR 6:284 (June 1980).

§305. Plates for Members of Congress

A. Description. Special plates for members of the United States Senate shall be stamped to indicate such status and to indicate seniority. Special plates for members of the United States House of Representatives shall be stamped to indicate such status and shall be stamped with the number of the district the member represents.

B. Eligibility. Incumbent members of congress in the Louisiana Delegation may apply for these special license plates. The plates may be issued for any private passenger automobile or private use van which would qualify for a regular-issue automobile license plate. Each member shall be allowed two such plates.

C. Place of Application. Applications for issuance of these special plates shall be made at the:

Vehicle Registration Bureau
109 South Foster Drive
Baton Rouge, Louisiana

or through the mail by writing to the:

Department of Public Safety
Vehicle Registration Bureau
Special Services, Box 66196
Baton Rouge, Louisiana 70896

D. Application. Applications for issuance or transfer of such special plates shall be made on the prescribed Department of Public Safety, vehicle registration (DPSVR) forms. If the vehicle is not registered in the applicant's name, he must submit proper title documentation and fees along with the request for special plate.

E. Fees. The fee for issuance of such a special license plate shall be $6 every two years. The plate can be transferred from one vehicle to another upon payment of a

$3 transfer fee. The plates are subject to regular renewal requirements.

F. Cancellation. These special license plates shall be subject to immediate cancellation for any of the following reasons.

1. The plate is displayed on a vehicle other than the one for which it was issue.

2. The member of Congress no longer wishes to display the plate on the vehicle.

3. The successor member does not want to display the plate on the vehicle.

G. Replacement. If the special plate is lost or stolen, the member of congress may apply for a replacement by executing the prescribed DPSVR form and submitting that form along with a photocopy of the registration certificate and a $2 fee to the Vehicle Registration Bureau in the manner of making application for such plates.

AUTHORITY NOTE: Promulgated in accordance with R.S. 49:952.

HISTORICAL NOTE: Promulgated by the Department of Public Safety, Office of Motor Vehicles, LR 6:284 (June 1980).

§307. National Guard Plates

A. Eligibility. An active member of the Louisiana National Guard may apply for a National Guard license plate. Such plates shall be issued for any private passenger automobile or private use van which would qualify for a regular issue automobile license plate.

B. Place of Application. Applications for issuance of National Guard license plates shall be made at the:

Vehicle Registration Bureau
109 South Foster Drive
Baton Rouge, Louisiana

or through the mail by writing to the:

Department of Public Safety
Vehicle Registration Bureau
Special Services, Box 66196
Baton Rouge, Louisiana 70896

C. Application. All applications for issuance or transferring of a National Guard license plate shall be made on prescribed Department of Public Safety vehicle registration (DPSVR) forms. Applications must be accompanied by proof of the applicant's status as a member in good standing of the Louisiana National Guard. If the vehicle is not registered in the applicant's name, he must submit proper title documentation and fees along with the request for the special license plate.

D. Fees. The fee for issuance of a Louisiana National Guard license plate shall be $6 every two years. The plate can be transferred from one vehicle to another upon payment of a $3 transfer fee. The plates are subject to regular renewal requirements and proof of the owner's status as a current member of the Louisiana National Guard.

E. Cancellation. Special plates displayed on vehicles other than those for which they are issued are subject to immediate cancellation. If the owner of a vehicle no longer wishes to display the plate on his vehicle or to transfer the plate to another vehicle registered in his name, the plate shall be returned for cancellation to the Vehicle Registration Bureau at its address designated in Subsection B above. The plate shall be surrendered upon termination of the owner's status as a member of the Louisiana National Guard.

F. Replacement. If the National Guard license plate is lost or stolen, the owner may apply for a replacement license plate by executing the prescribed DPSVR form and submitting it along with a photocopy of the registration certificate and a $2 fee.

AUTHORITY NOTE: Promulgated in accordance with R.S. 47:463.10.

HISTORICAL NOTE: Promulgated by the Department of Public Safety, Office of Motor Vehicles, LR 6:284 (June 1980).

§309. Prestige License Plates

A. Description. The plates shall bear combinations of not more than six characters. Any combination of numerical and alphabetical characters can be used; however, at least two alphabetical characters must be used in any configuration. A plate comprising six characters is entitled to one free space. The only characters other than alphabetical or numerical characters that can be used are periods and dashes. Plates bearing obscene or objectionable words or initials will not be authorized.

B. Eligibility. Prestige license plates may be used on the following types of vehicles:

1. private passenger automobiles;

2. private passenger pickup trucks up to 6,000 pounds;

3. private use vans which qualify for automobile or minimum use pickup truck plates;

4. private buses and recreational vehicles;

5. commercial vehicles operated for private use only.

C. Place of Application. Applications for issuance of prestige license plates shall be made at the:

Vehicle Registration Bureau
109 South Foster Drive
Baton Rouge, Louisiana

or through the mail by writing to the:

Department of Public Safety
Box 66196
Baton Rouge, Louisiana 70896

D. Application. All applications for issuance of prestige license plates shall be made on form DPSVR 1619 and all transfers and conversions shall be made on prescribed DPSVR forms. If the vehicle on which the prestige plate will be displayed has been purchased but application for title has not been made, the application for title and the request for prestige plate will be taken at the same time. A numerical plate will be issued for the vehicle until the prestige plate has been received, at which time the numerical plate and corresponding registration certificate will be surrendered for cancellation.

E. Fee. The fee for issuance of a prestige license plate shall be $25 a year for the prestige plate plus the regular registration fee of $3 a year for automobiles, $10 a year for pickup trucks and $25 a year for private buses. The plate can be transferred from one vehicle to another, however, a $3 transfer fee is due. The plates are subject to regular renewal requirements. Once a prestige license plate has been issued to an applicant, he shall have priority to such plate for succeeding years, provided application for renewal and fee are submitted within the allotted period.

F. Cancellation. Prestige license plates displayed on vehicles other than those to which issued are subject to immediate cancellation. If the applicant no longer wishes to display the plate on his vehicle or transfer the plate to another vehicle registered in his name, the plate shall be returned to this office for cancellation. The commissioner shall cancel and pick up any plate inadvertently issued and later found to carry a connotation offensive to good taste and decency. No refund or replacement will be made.

G. Replacement. If the prestige plate is lost or stolen, applicant may apply for a replacement plate by executing prescribed DPSVR form and submitting along with the registration certificate and $2 fee.

AUTHORITY NOTE: Promulgated in accordance with R.S. 47:463.2.

HISTORICAL NOTE: Promulgated by the Department of Public Safety, Office of Motor Vehicles, LR 5:364 (November 1979).

§311. Ex-Prisoners of War License Plates

A. Eligibility. Applicants for ex-prisoner of war license plates shall include all former prisoners of war of World War I, World War II, the Korean Conflict and the Vietnamese Conflict. License plates shall be issued for any private passenger automobiles, private use minimum trucks and private use vans. If the applicant qualifies for both a disabled veteran's license plate and an ex-prisoner of war license plate, he shall be issued only one type. He cannot have both.

B. Place of Application. Applications for issuance of ex-prisoner of war license plates shall be made at the:

Vehicle Registration Bureau
109 South Foster Drive
Baton Rouge, Louisiana

or through the mail by writing to the:

Department of Public Safety
Box 66196
Baton Rouge, Louisiana 70896

C. Application. All applications for issuance or transfer of ex-prisoner of war license plates shall be made on prescribed DPSVR forms. Applications must be accompanied by an affidavit signed by a Veterans Affairs Service Officer attesting to the applicant's eligibility or sufficient proof of the applicant's status as an ex-prisoner of war. If the vehicle is not registered in the applicant's name, he must submit proper title documentation and fees along with the request for ex-prisoner of war license plate.

D. Fee. There shall be no charge for the initial issuance of the ex-prisoner of war license plate. The plate can be transferred from one vehicle to another; however, there will be a $3 transfer fee. Only one ex-prisoner of war license plate shall be issued for each applicant.

E. Cancellation. Ex-prisoner of war license plates displayed on vehicles other than those to which issued shall be subject to immediate cancellation and all such vehicles subject to full registration fees prescribed by law. If the applicant no longer wishes to display the plate on his vehicle or if the applicant is deceased, the plate shall be returned to this office.

F. Replacement. If the ex-prisoner of war license plate is lost or stolen, the applicant may apply for a replacement plate by executing the prescribed DPSVR form and submitting it along with the registration certificate and $2.

AUTHORITY NOTE: Promulgated in accordance with R.S. 47:463.7.

HISTORICAL NOTE: Promulgated by the Department of Public Safety, Office of Motor Vehicles, LR 5:364 (November 1979).

§313. Disabled Veterans' License Plates

A. Eligibility. Applicants for disabled veterans' license plates shall include any veteran who has a service-connected disability of 100 percent, total and permanent, and who is a resident of this state. License plates shall be issued for any private passenger automobiles, private use minimum trucks and private use vans. If the applicant qualifies for both a disabled veterans' license plate and an ex-prisoner of war license plate, he shall be issued only one type. He cannot have both.

B. Place of Application. Applications for issuance of disabled veterans' license plates shall be made at the:

Vehicle Registration Bureau
109 South Foster Drive
Baton Rouge, Louisiana

or through the mail by writing to the:

Department of Public Safety
Special Services Section
Box 66196
Baton Rouge, Louisiana 70896

C. Application. All applications for issuance or transfer of disabled veterans' license plates shall be made on prescribed DPSVR forms. Applications must be accompanied by an affidavit signed by a Veterans Affairs Service officer attesting to the applicant's eligibility. If the vehicle is not registered in the applicant's name, he must submit proper title documentation and fees along with the request for disabled veteran's license plate.

D. Fee. There shall be no charge for the initial issuance of the disabled veteran's license plate. The plate can be transferred from one vehicle to another, however, there will be a $3 transfer fee. Only one disabled veteran's license plate can be issued for each applicant.

E. Cancellation. Disabled veterans' license plates displayed on vehicles other than those to which issued are

subject to immediate cancellation and all such vehicles subject to full registration fees prescribed by law. If the applicant no longer wishes to display the plate on his vehicle or if the applicant is deceased, the plate shall be returned to this office.

F. Replacement. If the disabled veteran's license plate is lost or stolen, applicant may apply for a replacement plate by executing the prescribed DPSVR form and submitting along with the registration certificate and $2 fee.

AUTHORITY NOTE: Promulgated in accordance with R.S. 47:463.11

HISTORICAL NOTE: Promulgated by the Department of Public Safety, Office of Motor Vehicles, LR 5:364 (November 1979).

§315. Antique License Plates

A. Definition

Antique Motor Vehicle—a motor vehicle, including a motorcycle, which is at least 30 years of age or older that, because of its significance, is being collected, preserved, restored, operated or maintained by a hobbyist as a leisure pursuit.

B. Place of Application. Applications for issuance of antique license plates shall be made at the:

Vehicle Registration Bureau
109 South Foster Drive
Baton Rouge, Louisiana 70896

C. Application. All applications for issuance or transfer of antique license plates shall be made on prescribed DPSVR forms. Applications must be accompanied by either a copy of a current membership card in an antique car club or a notarized statement attesting to the condition of the vehicle and a picture of the vehicle. If the vehicle is not presently registered in the applicant's name, he must submit proper title documentation and fees along with the request for antique license plate.

D. Fee. The fee for issuance of the antique license plate shall be $15 and shall be issued for the life of the vehicle. The fee for transferring such plate to a subsequent owner of vehicle shall be $5. Each subsequent owner will also be required to submit a machine copy of a current membership card in an antique car club or a notarized statement attesting to the condition of the vehicle and a picture of the vehicle.

E. Cancellation. Antique license plates displayed on vehicles other than those to which issued are subject to immediate cancellation and all such vehicles subject to full registration fees prescribed by law. Vehicles which no longer qualify as true antiques by modifications contrary to stock specifications or vehicles on which the owner no longer wishes to display antique plates must return the antique plate for cancellation and purchase regular numerical license plates.

F. Replacement. If the antique plate is lost or stolen, applicant shall apply for a replacement license plate by executing prescribed DPSVR form and submitting it along with the registration certificate and $2 fee.

AUTHORITY NOTE: Promulgated in accordance with R.S. 47:463.8.

HISTORICAL NOTE: Promulgated by the Department of Public Safety, Office of Motor Vehicles, LR 5:365 (November 1979).

§317. Citizens Band (CB) Radio Operator's License Plates

A. Eligibility. Applicants for CB radio operator's license plates shall include any persons possessing a CB radio operator's license issued by the Federal Communications Commission. Such plates shall be issued on personally used private passenger vehicles, private use minimum trucks, private use vans and private busses.

B. Place of Application. Applications for issuance of CB radio operators' license plates shall be made at the:

Vehicle Registration Bureau
109 South Foster Drive
Baton Rouge, Louisiana

or through the mail by writing to the:

Department of Public Safety
Special Services Section
Box 66196
Baton Rouge, Louisiana 70896

C. Applications. All applications for issuance or transfer of CB plates shall be made on prescribed Department of Public Safety Vehicle Registration (DPSVR) forms. Applications must be accompanied by a photocopy of the CB operator's license issued by the Federal Communications Commission. If the vehicle on which the CB plate will be displayed has been purchased but application for title has not been made, the application for title and the request for the special plate will be taken at the same time. A numerical plate will be issued for the vehicle until the special plate has been received, at which time the numerical plate and corresponding registration certificate will be surrendered for cancellation.

D. Fee. The fee for issuance shall be $25 a year for the plate plus the regular registration fee of $3 a year for automobiles, $10 a year for pickup trucks and $25 a year for private busses. The plates are subject to regular renewal requirements.

E. Cancellation. CB plates displayed on vehicles other than those to which issued are subject to immediate cancellation. If the applicant no longer wishes to display the plate on his vehicle or wishes to transfer the plate to another vehicle registered in his name, the plate shall be returned to this office for cancellation.

F. Replacement. If the CB plate is lost or stolen, the applicant may apply for a replacement plate by executing the prescribed DPSVR form and submitting it along with the current registration certificate and a $2 fee.

AUTHORITY NOTE: Promulgated in accordance with R.S. 49:952.

HISTORICAL NOTE: Promulgated by the Department of Public Safety, Office of Motor Vehicles, LR 6:21 (January 1980).

§319. Consuls' License Plates

A. Eligibility

1. Applicants for consuls' license plates shall include the following:

a. consul generals;

b. consulates (the offices);

c. honorary consuls—citizens of the United States who hold an exequatur from the United States to represent another country;

d. consuls and other office help-attaches.

2. The plate numbers are assigned by the dean of consul corps according to protocol.

B. Place of Application.

1. Application for issuance of consuls' license plates shall be made at the:

Vehicle Registration Bureau
109 South Foster Drive
Baton Rouge, Louisiana

a. or through the mail by writing to the:

Department of Public Safety
Special Services Section
Box 66196
Baton Rouge, Louisiana 70896

2. Applications shall also be accepted at the:

Vehicle Registration Bureau
325 Loyola Avenue
New Orleans, Louisiana

3. However, all plates will be issued from the headquarters office.

C. Applications. All applications for issuance or transfer of consuls' license plates shall be made on prescribed DPSVR forms. If the vehicle on which the consul plate will be displayed is not presently registered in Louisiana, proper title documentation and fees must be submitted along with the request for the plate.

D. Fee

1. Fees for consuls' plates are due as follows:

a. consul general—no charge, free plate;

b. consulates (the offices)—no charge, free plate;

c. honorary consuls—fee will be the same as for regular license plate;

d. consuls and other office help (attaches)—if they do hold an exequatur, there is no charge for the consul plate. If they do not hold an exequatur, they can obtain a free private plate.

2. Applicant must be a native of the country he represents. The plates can be transferred from one consul to another providing the original consul leaves his position and a new one takes over. A plate can also be transferred from one vehicle to another; however, there will be a $3 transfer fee. Two consul plates can be issued to each qualified official.

E. Cancellation. If the applicant leaves his position and a new representative is not appointed to take his place, the plate must be returned for cancellation. If the applicant no longer wishes to display the plate on his vehicle, it must be surrendered for cancellation.

F. Replacement. If the consul plate is lost or stolen, the applicant may apply for a replacement plate by executing prescribed DPSVR form and submitting it with a copy of the current registration certificate. Another plate number shall be assigned by the Dean of the Consul Corps. No fee will be charged for this replacement.

AUTHORITY NOTE: Promulgated in accordance with R.S. 49:952.

HISTORICAL NOTE: Promulgated by the Department of Public Safety, Office of Motor Vehicles, LR 6:21 (January 1980).

§321. Amateur Radio Operators' License Plates

A. Eligibility. Applicants for amateur radio operators' license plates shall include any persons possessing a current amateur radio license issued by the Federal Communications Commission. Such plates shall be issued on personally used private passenger vehicles, private use minimum trucks, private use vans and private busses.

B. Place of Application. Applications for issuance of amateur radio operators' license plates shall be made at the:

Vehicle Registration Bureau
109 South Foster Drive
Baton Rouge, Louisiana

or through the mail by writing to the:

Department of Public Safety
Special Services Section
Box 66196
Baton Rouge, Louisiana 70896

C. Application. All applications for issuance or transfer of amateur radio operators' license plates shall be made on prescribed DPSVR forms. Application must be accompanied by a photocopy of the applicant's current amateur radio operator's license issued by the Federal Communications Commission. If the vehicle on which the plate will be displayed has been purchased but application for title has not been made, the application for title and the request for special plate will be taken at the same time. A numerical plate will be issued for the vehicle until the special plate has been received, at which time the numerical plate and corresponding registration certificate will be surrendered for cancellation.

D. Fee. The fee for issuance of an amateur radio operator's license plate shall be $1 plus the regular registration fee. The plate can be transferred from one vehicle to another upon payment of a $3 transfer fee. The plates are subject to regular renewal requirements.

E. Cancellation. Amateur radio operators' license plates displayed on vehicles other than those to which issued are subject to immediate cancellation. If the applicant no longer wishes to display the plate on his vehicle or transfer the plate

to another vehicle registered in his name, the plate shall be returned to this office for cancellation.

F. Replacement. If the plate is lost or stolen, applicant may apply for a replacement plate by executing prescribed DPSVR form and submitting it along with the registration certificate and a $2 fee.

AUTHORITY NOTE: Promulgated in accordance with R.S. 47:463.3.

HISTORICAL NOTE: Promulgated by the Department of Public Safety, Office of Motor Vehicles, LR 6:22 (January 1980).

§323. U.S. Veterans License Plate

A. Special license plates will be issued to any veteran of the Armed Forces of the United States for private passenger cars, minimum pickup trucks and vans.

B. Eligibility. A qualified veteran shall include any veteran who has served at least 90 days military duty in a branch of the United States Armed Forces.

C. Requirements. All applications (DPSMV 1799) for veteran license plates must be accompanied by proof of service, such as photocopy of discharge certificate. Discharge must be of honorable condition. If the vehicle is not registered in the applicant's name, he must submit proper title documentation and fees along with the request for U.S. Veteran license plates.

D. Cancellation. Special license plates displayed on vehicles other than those for which they are issued are subject to immediate cancellation. If the owner of a vehicle no longer wishes to display the plate on his vehicle or if the applicant is deceased, the plate shall be returned to the department for cancellation.

E. Fees

1. The fee for obtaining a U.S. Veteran license plate is $50 (two years). The fee to renew the veteran plate is as follows:

a. $56—private auto (two years);

b. $2.33—fee calculation per month for validation sticker (auto);

c. $70—private pickup truck/van;

d. $2.91—fee calculation per month for validation sticker (truck/van).

F. Procedures. Renewals, duplicate titles, title correction and replacement sticker will be processed in field office. All other requests should be forwarded to:

Driver/Registration Processing Unit
Room 1, Box 64886
Baton Rouge, LA 70896

AUTHORITY NOTE: Promulgated in accordance with R.S. 47:463.18.

HISTORICAL NOTE: Promulgated by the Department of Public Safety and Corrections, Office of Motor Vehicles, LR 12:156 (March 1986).

§325. International Registration Plan

A. The Department of Public Safety and Corrections, Office of Motor Vehicles, hereby adopts by reference, the *International Registration Plan*, hereinafter referred to as the plan, adopted in August 1994 and as revised through January 1, 2013, by the member jurisdictions, and published by International Registration Plan, Inc. The department only adopts the articles and sections contained in the agreement, as well as the exceptions to the plan as reflected in the January 1, 2013 revision and included in Appendix C of the plan. The commentary and governing board decisions included with the adopted plan shall not be part of this rule, but may be considered by the department in interpreting and implementing the various sections of the plan.

AUTHORITY NOTE: Promulgated in accordance with R.S. 47:511.

HISTORICAL NOTE: Promulgated by the Department of Public Safety and Corrections, Office of Motor Vehicles, LR 26:89 (January 2000), amended LR 29:605 (April 2003), LR 30:2859 (December 2004), LR 39:2512 (September 2013).

§327. Apportioned Plates

A. All commercial motor vehicles registered pursuant to the "International Registration Plan" and issued an apportioned license plate shall be issued a permanent metal license plate at the time of first issuance, or at the time of first renewal of the apportioned registration after the effective date of this rule.

B. The permanent metal plate issued pursuant to §325.A shall be renewed annually, but without the issuance of a renewal emblem, sticker, or tab by the Department of Public Safety and Corrections, Office of Motor Vehicles. The department shall issue a renewed certificate of registration or other credential to indicate that the metal plate attached to, and displayed by, the commercial motor vehicle is still valid. The original or a copy of the renewed certificate of registration or other credential shall be kept with the commercial motor vehicle described in the certificate or other credential.

C. The initial certificate of registration or other credential, as well as all renewed certificates of registration or other credentials, shall not be issued until all fees and taxes, together with any applicable penalties and interest, as are required by statute, are paid by the applicant.

D. A permanent metal plate issued pursuant to this Section may be used for a period of five years if properly and timely renewed. After the expiration of the fifth year, the registrant shall replace the old plate with a new plate issued by the department. The registrant shall cause the old plate to be destroyed. The failure to comply with this Paragraph may result in the imposition of a fine of $25 per plate. The Assistant Secretary for the Office of Motor Vehicles may, for good cause, extend the replacement period provided in this Section. Such a request for extension shall be in writing and shall state the reason for the extension of the replacement period. Only one extension pursuant to this Section may be granted, and the granting of an extension shall be in writing.

An extension granted pursuant to this Section shall not exceed two years.

E. For purposes of §327, the department interprets the Interstate Registration Plan described in R.S. 47:508(H), to mean the "International Registration Plan" described in R.S. 47:511, and adopted by the department by reference in §325.

AUTHORITY NOTE: Promulgated in accordance with R.S. 47:508(H).

HISTORICAL NOTE: Promulgated by the Department of Public Safety and Corrections, Office of Motor Vehicles, LR 26:89 (January 2000), amended LR 29:605 (April 2003).

§329. Removal of License Plate When Owner/Operator Is Suspended

A. At the time of a law enforcement stop, if the operator of the vehicle is found to have a suspended license and it is further determined that operator is the sole owner of the vehicle the following will occur.

1. Notice of suspension ticket will be issued to the operator of the vehicle.

2. A sticker will be placed on the back of the rear windshield of the vehicle being operated.

3. The law enforcement office will remove the plate from the vehicle.

4. The officer will turn the ticket and the plate into the local Office of Motor Vehicles office within three business days.

B. Upon receipt of the notice of suspension, the Office of Motor Vehicles will confirm the operator is the sole owner of the vehicle and their operating privileges were suspended at the time of the violation.

C. The owner/operator of the vehicle has 10 business days upon receiving the violation to clear their driving record of all fines and suspensions with the proper compliance to have their plate returned to them.

D. If the owner does not clear all fines and suspensions within the 10 business days of the issuance of the violation, the Office of Motor Vehicles will destroy the plate. Operators complying with the law after ten business days will be required to purchase a replacement plate and pay any applicable registration fees.

E. After the expiration of the 10 day period, the vehicle shall not be operated on the public streets and highways until the motor vehicle is registered in accordance with this law. In the event the motor vehicle is being driven after the expiration of the temporary sticker, the motor vehicle shall be impounded.

F.1. A hardship license plate will be issued for the vehicle being operated at the time of the violation if the applicant submits an application for hardship plate and provides sufficient documentation and information substantiating the claim that the removal of the vehicle's license plate and the suspension or revocation of his driving privileges will deprive him or his family of the necessities of life, or will prevent him or his family from earning a livelihood.

2. If the department finds that the removal of the vehicle's license plate and the suspension or revocation of his driving privileges will deprive him or his family of the necessities of life, or will prevent him or his family from earning a livelihood, the department may issue a hardship license plate to be placed on the motor vehicle.

3. A hardship license plate shall be a valid plate type on all motor vehicles with the exception of those operating under one of the following plate types at the time of the violation. The following plate types at the time of the violation shall be eligible for reissue of the same plate type. The vehicle record will be flagged as having been issued a notice of suspension and use of the vehicle is being permitted as a result of a departmentally approved hardship:

a. mobility impaired plate;

b. hearing impaired plate;

c. disabled veteran plate;

d. forest plate;

e. gravel plate;

f. city use plate;

g. farm plate.

4. A hardship license plate is not a driver’s license, and is not an authorization to drive for a person whose driving privileges are suspended or otherwise denied. Any person operating a motor vehicle with a hardship plate shall possess a valid driver’s license at all times, and such person shall comply with all laws regulating driver’s licenses and driving privileges.

AUTHORITY NOTE: Promulgated in accordance with R.S. 32:415.2 (D)(1).

HISTORICAL NOTE: Promulgated by the Department of Public Safety and Corrections, Office of Motor Vehicles, LR 40:2607 (December 2014).

§331. Dealer Plates

A. Dealer plates shall only be issued to dealer’s that possess a current license issued by either the Louisiana Motor Vehicle Commission or the Louisiana Used Motor Vehicle Commission.

B. The fee shall be issued in accordance to R.S. 47:473(E). Plate shall be valid for one year.

C. Upon issuance or renewal of a dealer plate, the applicant shall submit a copy of the current license as described in Subsection A as well as proof of insurance.

D. Dealers licensed by the Louisiana Motor Vehicle Commission shall be issued dealer plates that differ in appearance from those issued to dealers licensed by the Louisiana Used Motor Vehicle Commission.

1. Plates issued to dealers licensed by the Louisiana New Motor Vehicle Commission shall be printed on a gold background with black lettering.

2. Plates issued to dealers licensed by Louisiana Used Motor Vehicle Commission shall be printed on a white background with blue lettering.

E. The Office of Motor Vehicles may suspend or revoke the privileges of any dealer who utilizes a dealer plate or has allowed the use of a dealer plate for purposes other than what is stated in law.

F. In the event the dealer's license is suspended, revoked, cancelled, or non-renewed by the appropriate commission, or the dealer ceases or suspends business for whatever cause, the dealer shall promptly surrender all dealer plates issued to said dealer to the office of motor vehicles. In the event a plate is lost, the dealer shall submit an affidavit describing the circumstances of the lost plate in detail.

AUTHORITY NOTE: Promulgated in accordance with R.S. 47:473.

HISTORICAL NOTE: Promulgated by the Department of Public Safety and Corrections, Office of Motor Vehicles, LR 40:2602 (December 2014).

§333. Louisiana Educator License Plate

A. Eligibility. Applicants for the Louisiana educator license plate shall include any educator educated or employed in Louisiana.

B. Requirements. A notarized affidavit to certify that applicant is an educator who received his/her degree from a Louisiana college/university (must name college/university) or is currently employed as an educator (must name specific school). In lieu of the affidavit, proof of degree and employment will be acceptable. Applicant shall provide proof of employment as an educator. A photocopy of the registration certificate of the vehicle on which the plate will be placed if the vehicle is currently registered. If the vehicle is not registered, proper title documentation and fees must be submitted along with the request for the Louisiana educator license plate.

C. Fee. The fee for issuance of a Louisiana educator license plate shall be in accordance with R.S. 47:463.11. The fee for transferring such plate to another vehicle shall be a $3 transfer fee in addition to a handling fee. The plates are subject to regular renewal requirements.

AUTHORITY NOTE: Promulgated in accordance with R.S. 47:463.44.

HISTORICAL NOTE: Promulgated by the Department of Public Safety and Corrections, Office of Motor Vehicles, LR 40:2603 (December 2014).

§335. Retired Law Officer License Plate

A. Eligibility. Applicants for the retired law officer plate shall include any person who was employed as a law officer for 12 years or more.

B. Requirements. The applicant shall provide proof of employment as a law officer for twelve years or more, regardless of whether or not that person is a member of, or is receiving retirement benefits from a retirement system for law officers. A notarized affidavit from the applicant to include the applicant's place of employment and statements attesting that the applicant was not discharged for misconduct related to his employment and has not been convicted of any felony. The affidavit must be submitted at initial issuance and at each renewal. A photocopy of the registration certificate of the vehicle on which the plate will be placed if the vehicle is currently registered. If the vehicle is not registered in the applicant's name, then all necessary documentation required for titling of the vehicle must be submitted along with the request for the retired law officer license plate.

C. Fee. The fee for issuance of a retired law officer license plate shall be in accordance with R.S. 47:463.24. A $3 fee and a handling fee shall be due to transfer the plate to another vehicle in the applicant's name. The plates are subject to regular renewal requirements.

AUTHORITY NOTE: Promulgated in accordance with R.S. 47:463.24.

HISTORICAL NOTE: Promulgated by the Department of Public Safety and Corrections, Office of Motor Vehicles, LR 40:2603 (December 2014).

§337. Military Surplus Motor Vehicles

A. Eligibility. Applicants for the military surplus motor vehicles specialty plate must be at least 21 years of age and possess a valid driver's license.

B. Requirements. To obtain a military surplus motor vehicles specialty plate, the applicant shall submit a certification form that the vehicle is capable of being safely operated on the highways of this state. Any military surplus motor vehicle found to be non-compliant to the requirements in R.S. 47:471, or otherwise deemed unsafe to be operated on the highways of this state are subject to the registration being suspended. A military surplus license plate shall be issued to military surplus vehicles. Military surplus vehicles registered to a public entity shall be issued a public plate. Military surplus plates used in a commercial capacity shall be issued the appropriate plate for the class as defined in R.S. 47:462. An affidavit of physical inspection will be required when there is an invalid character in the vehicle identification number or if the vehicle identification number fails the edit check. Any military surplus motor vehicle operated upon the highway of this state shall have liability insurance with the same minimum limits as required by the provisions of R.S. 32:900(B). A photocopy of the registration certificate of the vehicle on which the plate will be placed if the vehicle is currently registered. If the vehicle is not registered, proper title documentation and fees must be submitted along with the request for the military surplus motor vehicles specialty license plate.

C. Fee. The fee for issuance of a military surplus motor vehicles specialty license plate shall be the standard motor vehicle license tax imposed by article VII, section 5 of the constitution of Louisiana, based upon the make and model of the military surplus vehicle. The plates are subject to regular renewal requirements.

AUTHORITY NOTE: Promulgated in accordance with R.S. 32:667(A).

HISTORICAL NOTE: Promulgated by the Department of Public Safety and Corrections, Office of Motor Vehicles, LR 44:2217 (December 2018).

Subchapter B. Vehicle Registration License Tax

§351. Definitions

A. As used in this Subchapter, the following terms have the meanings described below.

Acquired—any transfer of full ownership from one juridical person to another including but not limited to sales, dations, donations, exchanges, or inheritances.

Assistant Secretary—the assistant secretary of the Department of Public Safety and Corrections, Office of Motor Vehicles.

Damage—the dollar value of repairs to the motor vehicle necessary to return the motor vehicle to its fair market value.

Department—the Department of Public Safety and Corrections, Office of Motor Vehicles.

Low Bills of Sale—values determined to be below the full loan value as shown by the most current *N.A.D.A. Official Used Car Guide, South-Western Edition* (or its successor).

Motor Vehicle—each passenger carrying automobile, van, or other motor vehicle carrying only passengers and their personal effects exclusively, not meeting the requirements of R.S. 47:463.5 or using or operating on rails or upon permanent tracks and operated only for personal use.

N.A.D.A. Official Older Used Car Guide—periodical published by the National Appraisal Guide, Inc., which contains value projections of used motor vehicles for years not covered by the *N.A.D.A. Official Used Car Guide, South-Western Edition*.

N.A.D.A. Official Used Car Guide, South-Western Edition—periodical published by N.A.D.A. Official Used Car Guide Company which contains value projections of used motor vehicles.

Trial Court of Limited Jurisdiction—a court other than a district court having jurisdiction over civil matters including but not limited to city courts, parish courts, justice of the peace courts, and mayor's courts.

Value Guide to CARS of Particular Interest—periodical published by CPI, Ltd., which contains value projections of domestic and imported collectible cars produced since 1946.

AUTHORITY NOTE: Promulgated in accordance with R.S. 47:463(A)(2).

HISTORICAL NOTE: Promulgated by the Department of Public Safety and Corrections, Office of Motor Vehicles, LR 23:1323 (October 1997), amended LR 24:475 (March 1998).

§353. Valuation of Vehicles under the Vehicle Registration License Tax Registered on or after January 1, 1990

A. For all Louisiana motor vehicle registrations that were issued prior to and expire on or after January 1, 1990, the renewal tax shall be assessed and collected as provided in §357, except that the value of the motor vehicle for purposes of the vehicle registration license tax shall be $10,000 at the time of the first renewal of the registration after January 1, 1990, and for each subsequent renewal of the registration until such time as the motor vehicle is transferred to a new owner, or the registration is canceled and the license plate is returned to the Office of Motor Vehicles.

B. For all Louisiana motor vehicle registrations that are issued on or after January 1, 1990, the value of the motor vehicle shall be determined as provided in §355, except that the value of the motor vehicle for first and subsequent renewals shall remain the same as was determined at the initial registration and will remain the same until such time as the motor vehicle is transferred to a new owner, or the registration is canceled and the license plate is returned to the Office of Motor Vehicles.

AUTHORITY NOTE: Promulgated in accordance with R.S. 47:463(A)(2).

HISTORICAL NOTE: Promulgated by the Department of Public Safety and Corrections, Office of Motor Vehicles, LR 23:1323 (October 1997).

§355. Valuation of Motor Vehicles for Purposes of Initial and Subsequent Registration on or after January 1, 1990

A. Except in cases of damaged motor vehicles, donations, out-of-state transfers, or low bills of sale, the value of the motor vehicle shall be determined by the purchase price as indicated on the bill of sale or invoice.

B. In the case of donations, out-of-state transfers, or low bills of sale, the value shall be determined and based upon the full loan value contained in the most current *N.A.D.A. Official Used Car Guide, South-Western Edition* (or its successor) as maintained by the Office of Motor Vehicles. In the case of classic automobiles or other automobiles of particular interest not included in the *N.A.D.A. Official Used Car Guide, South-Western Edition* (or its successor), the full loan value shall be determined by reference to the *N.A.D.A. Official Older Used Car Guide* or the *Value Guide to CARS of Particular Interest*. If the value of the motor vehicle cannot be determined by reference to any of these three guide books, the actual value of the motor vehicle shall be determined by the Office of Motor Vehicles based upon such information supplied by the person seeking to register the vehicle and such information that may be required from such person by the assistant secretary or his designee.

C. The valuation of a damaged motor vehicle shall be the value of the motor vehicle at time of acquisition as determined pursuant to §355.C.1 and 2. The following must be presented to the Office of Motor Vehicles to establish an

actual value on such a vehicle of less than the full loan value:

1.a. an affidavit by the seller or transferor of the motor vehicle specifying in detail the nature of damage to the vehicle and a written invoice from a bona fide mechanic or repairman showing a detailed estimate of the cost of repair to said vehicle. The assistant secretary or his designee may require additional information or documentation to determine the value of the motor vehicle. Upon review of all documentation and information, the assistant secretary or his designee may add the proven damages to the sales price of the motor vehicle as is reflected in the bill of sale submitted in connection with the application to register the motor vehicle. If the total of the proven damages and the sales price is within $1,000 of the full loan value as determined in §355.B, the vehicle shall be valued according to the sales price. If the total of the proven damages and the sales price differs by more than $1,000 from the full loan value as determined in §355.B, the value of the motor vehicle shall be determined by deducting the proven damages from the full loan value as determined in §355.B;

b. upon a showing of good cause by the person applying to register the damaged motor vehicle, the assistant secretary or his designee may assign a value other than the value established pursuant to §355.B. The applicant for registration shall provide the department with such documentation as is necessary to justify this alternative valuation;

2. if the seller is a licensed new or used motor vehicle dealer, then the dealer or an employee of such dealer shall submit an affidavit specifying the nature of the damage and the sale price. The assistant secretary or his designee may require additional information or documentation to determine the value of the motor vehicle. Upon review of all documentation and information, the assistant secretary or his designee shall calculate the value of the motor vehicle in the same manner and under the same conditions as provided in §355.C.1.

D. Motor vehicles, the ownership of which is reacquired by the original owner within a period of two years from date of original acquisition, shall be registered at the original value upon renewal or registration by the original owner. Upon a showing of good cause by the person seeking to register the motor vehicle, the assistant secretary of the Office of Motor Vehicles may permit the vehicle to be valued as provided in §355.B-C, as the case may be.

E. Additional documentation may be required of any applicant for license or registration, including renewals, by the assistant secretary of the Office of Motor Vehicles or his designee.

F. In the case of high mileage, the loan value of the motor vehicle may be reduced according to the deduction contained in the guide book depending on the model year, the type of motor vehicle, and the amount of mileage set as excessive in the guide book.

G. In those instances when a federal or state regulated lending institution or financial institution determines that the motor vehicle has a loan value less than is indicated in the guide book, the applicant for motor vehicle registration may submit a statement from the lending institution or financial institution, signed by an officer of the institution, stating the loan value assigned to the vehicle by the institution. Such statement shall also contain a description of the vehicle including make, model, model year, and vehicle identification number. Upon receipt of such statement, the department may use the loan value contained in such statement for purposes of calculating the tax.

AUTHORITY NOTE: Promulgated in accordance with R.S. 47:463(A)(2).

HISTORICAL NOTE: Promulgated by the Department of Public Safety and Corrections, Office of Motor Vehicles, LR 23:1324 (October 1997), amended LR 24:475 (March 1998).

§357. Assessment of the Vehicle Registration License Tax

A. Every motor vehicle registered in Louisiana shall be subject to the motor vehicle license tax at a rate implemented in R.S. 47:463(A)(2) as amended by Acts 1989, Second Extraordinary Session, Number 23, §1. The vehicle registration license tax shall be assessed and collected at the time of acquisition and initial registration and at each subsequent renewal of the registration until such time as the motor vehicle is transferred to a new owner, or the registration is canceled and the license plate is returned to the Office of Motor Vehicles.

B. The vehicle registration license tax shall be assessed and collected as follows.

1. Each motor vehicle shall be taxed at a minimum of $10 per year for the first $10,000 value, plus $1 per $1,000 value in excess of $10,000.

2. For the purpose of computing the additional tax of $1 per each $1,000 value, any amount of $500 or more shall be rounded off to the next highest $1,000 and any amount less than $500 shall be disregarded.

3. Except as otherwise provided in this Subchapter, the value of the motor vehicle shall be determined at the time of the first registration.

AUTHORITY NOTE: Promulgated in accordance with R.S. 47:463(A)(2).

HISTORICAL NOTE: Promulgated by the Department of Public Safety and Corrections, Office of Motor Vehicles, LR 23:1324 (October 1997).

§359. Declaratory Orders and Rulings

A. Any person desiring a ruling on the applicability of R.S. 47:463 or any other statute, or the applicability or validity of any rule, to the payment of the vehicle registration license tax as it applies to the transfer, registration, or renewal of the registration of any motor vehicle shall submit a written petition to the assistant secretary. The written petition shall cite all constitutional provisions, statutes, ordinances, cases, and rules which are relevant to the issue presented or which the person wishes

the assistant secretary to consider prior to rendering an order or ruling in connection with the petition. The petition shall be typed, printed or written legibly, and signed by the person seeking the ruling or order. The petition shall also contain the person's full printed name, the complete physical and mailing address of the person, and a daytime telephone number.

B. If the petition seeks an order or ruling on a transaction handled by the Office of Motor Vehicles, the person submitting the petition shall notify the person or persons who submitted the transaction, if other than the person submitting the petition, including any lienholder, lessee, and registered owner. Such notice shall be sent by certified mail, return receipt requested. In such case, the petition shall not be considered until proof of such notice has been submitted to the assistant secretary, or until the person petitioning for the order or ruling establishes that the person or persons cannot be notified after a due and diligent effort. The notice shall include a copy of the petition submitted to the assistant secretary.

C. The assistant secretary may request the submission of legal memoranda to be considered in rendering any order or ruling. The assistant secretary or his designee shall base the order or ruling on the documents submitted including the petition and legal memoranda. If the assistant secretary or his designee determines that the submission of evidence is necessary for a ruling, the matter may be referred to a hearing officer prior to the rendering of the order or ruling for the taking of such evidence.

D. Notice of the order or ruling shall be sent to the person submitting the petition as well as the persons receiving notice of the petition at the mailing addresses provided in connection with the petition.

E. The assistant secretary may decline to render an order or ruling if the person submitting the petition has failed to comply with any requirement in §359.

AUTHORITY NOTE: Promulgated in accordance with R.S. 47:463(A)(2) and R.S. 49:962.

HISTORICAL NOTE: Promulgated by the Department of Public Safety and Corrections, Office of Motor Vehicles, LR 23:1324 (October 1997).

§361. Administrative Actions

A. The department may deny any application to register any motor vehicle if it is determined that information, documentation, or other materials submitted in connection with the application is false, inaccurate, misleading, or incomplete, or if the incorrect amount is submitted as payment of the vehicle registration license tax. The department may retain, or return to the person submitting the application, any such information, documentation or other material. The department, in its discretion, may make copies of the information, documentation or other material prior to returning said things to the person submitting the items. The notice of the denial shall be issued at the time the application is rejected and may be hand delivered to the applicant or the person submitting the application on behalf of the applicant, or may be mailed to the applicant at the discretion of the department.

B. The department may cancel, suspend or revoke the registration of any motor vehicle if it is subsequently determined that information, documentation, or other materials submitted in connection with the application to register the motor vehicle was false, inaccurate, misleading, or incomplete, or if the incorrect amount was submitted as payment of the vehicle registration license tax. The department, in its discretion, may allow the applicant a reasonable opportunity to correct any problems prior to canceling, suspending, or revoking the registration. The notice of cancellation, suspension, or revocation shall be mailed to the applicant.

C. The applicant shall have 30 days from the date of any notice required by §361 to request an administrative hearing to review the action of the department. Any request for an administrative hearing shall only be mailed to the department at P.O. Box 64886, Baton Rouge, Louisiana, 70896-4886, or hand delivered to the Office of Motor Vehicle Headquarters in Baton Rouge, Louisiana.

AUTHORITY NOTE: Promulgated in accordance with R.S. 47:463(A)(2).

HISTORICAL NOTE: Promulgated by the Department of Public Safety and Corrections, Office of Motor Vehicles, LR 23:1325 (October 1997).

§363. Payment under Protest

A. Any person resisting the payment of any amount of the tax imposed by R.S. 47:463 shall provide notice to the assistant secretary at the time of the payment of the tax of the person's intention to file suit for the recovery of the contested amount of the tax.

B. If the contested payment of the license registration tax is submitted with an application for registration to a public tag agent, the applicant's notice required in §363.A shall be submitted to the public tag agent and a copy of the notice sent to the assistant secretary.

C. If a person other than the applicant for registration of the motor vehicle submits the contested payment with the application to the department, the applicant's notice required in §363.A shall be submitted to the department by the person submitting the application.

AUTHORITY NOTE: Promulgated in accordance with R.S. 47:463(B).

HISTORICAL NOTE: Promulgated by the Department of Public Safety and Corrections, Office of Motor Vehicles, LR 23:1325 (October 1997).

§365. Valuation of Motor Vehicles Awarded Pursuant to a Judgment of a Court of Limited Jurisdiction

A. The following guidelines shall be used when determining the value of a motor vehicle, the ownership of which is acquired pursuant to a written judgment of a trial court of limited jurisdiction.

1. If the written judgment or the written reasons for judgment do not indicate that the court made a determination

as to the value of the motor vehicle, the value shall be determined pursuant to §355.

2. If the written judgment or the written reasons for judgment contain a determination as to the value of the motor vehicle, and such value is not less than the value of the vehicle as determined in §355, then the motor vehicle shall be valued at such amount for purposes of collecting the vehicle registration license tax.

3. If the written judgment or the written reasons for judgment contain a determination as to the value of the motor vehicle, and such value is less than the value of the vehicle as determined in §355, then the following shall apply.

a. If the judgment or reasons for judgment contain specific factual findings as to why that particular value was assigned to the motor vehicle, then the motor vehicle shall be valued at such amount for purposes of collecting the vehicle registration license tax.

b. If the judgment or reasons for judgment do not contain specific factual findings as to why that particular value was assigned to the motor vehicle, then the motor vehicle shall be valued pursuant to §355.B.

4. Any judgment that is not reduced to writing shall not be used in the determination of the value of the motor vehicle for purposes of this Subchapter.

5. If the person submitting the application to register the motor vehicle refuses to pay the vehicle registration license tax as required in §365, the department shall deny or refuse the transaction.

B. No judgment shall be processed for purposes of titling or registering a motor vehicle unless the written judgment or the written reasons for judgment contain the following information:

1. the make, model, and model year of the motor vehicle;

2.a. the vehicle identification number of the motor vehicle, chassis number, or serial number as assigned by the manufacturer; or

b. the state police vehicle number assigned by a commissioned Louisiana state trooper after a physical inspection of the vehicle if the vehicle does not have a vehicle identification number assigned by the manufacturer;

3. the full name of each person or business entity in which the vehicle is to be titled and registered;

4. the full name of each person or business entity who sold, transferred, or otherwise assigned the vehicle to the persons or businesses required to be listed by §365.B.3;

5. the full price or other consideration given in exchange for the vehicle;

6. the date the sale, transfer or assignment occurred;

7. a statement as to whether any outstanding liens on the vehicle, which have been recorded with the Office of Motor Vehicles, have been released.

AUTHORITY NOTE: Promulgated in accordance with R.S. 47:463(A)(2).

HISTORICAL NOTE: Promulgated by the Department of Public Safety and Corrections, Office of Motor Vehicles, LR 23:1325 (October 1997), amended LR 24:476 (March 1998).

§367. Driver Privacy Protection Act

A. Every individual who is an applicant for a certificate of title, or a new or renewed motor vehicle registration, shall be given the opportunity to prohibit the disclosure of personal information as defined in LAC 55, Part III, Chapter 5, §553, Subchapter B, by completing the department's approved form, and submitting the form to the department as required in the instructions on the form. An individual may submit a properly completed form to the department at anytime without having to transact any other business with the department. A form which is incomplete or which is illegible shall not be processed and shall not be returned.

B. Until the department receives a properly completed form from an individual, the personal information provided by the individual to the department shall be considered a public record as provided in R.S. 44:1 et seq.

C. Upon receipt of a properly completed form, the department will code the individual's record to reflect the proper disclosure code pursuant to the option chosen on the form.

AUTHORITY NOTE: Promulgated in accordance with R.S. 32:401 et seq.

HISTORICAL NOTE: Promulgated by the Department of Public Safety and Corrections, Office of Motor Vehicles, LR 25:2257 (November 1999).

§381. Definitions

A. As used in Subchapter C, the following terms have the meanings described below.

Base Plate State—the state which issues an apportioned license plate pursuant to the International Registration Plan.

Department—Department of Public Safety and Corrections, Office of Motor Vehicles.

Eligible Contract Carrier Buses—those buses used at least 80 percent of the time in interstate commerce.

Established Place of Business—a physical structure, owned, leased, or rented by the applicant, which has a publicly listed telephone, and has persons physically located at the business location for the purpose of conducting business operations.

Person—includes person, corporation, partnership, limited liability company, firm, association or other legal entity formed to conduct business.

AUTHORITY NOTE: Promulgated in accordance with R.S. 47:305.50 and R.S. 47:321.

HISTORICAL NOTE: Promulgated by the Department of Public Safety and Corrections, Office of Motor Vehicles, LR 25:2257 (November 1999).

§383. Exemption from Sales Tax

A. Trucks with a minimum gross weight of 26,000 pounds, trailers, and contract carrier buses used at least 80 percent of the time in interstate commerce may claim a sales and use tax exemption.

B. The term *trucks* and *trailers* shall have the same meaning as the terms *truck, trailer, road tractor, or semi-trailer, tandem truck, tractor, and truck tractor* as defined in R.S. 47:451. The term *bus* shall mean a commercial vehicle with a minimum passenger capacity of 35 persons and a minimum gross weight of 26,000 pounds. The term *contract carrier* shall mean any person transporting, other than as a common carrier, persons for hire, charge, or compensation.

C. Eligible trucks and trailers purchased or previously registered out of state and being titled using a tax date between July 1, 1996 through September 30, 1996 are exempt from partial state tax (1 percent recovery district tax will be due) and all local parish/municipality tax. Those trucks and trailers purchased or previously registered out of state using a tax date on or after October 1, 1996, are exempt from all state and local parish/municipality tax. Business must be conducted in two or more states with Louisiana being the base plate state, therefore, only trucks which are obtaining apportioned license plates are eligible to receive this exemption.

D. Eligible contract carrier buses which were purchased or previously registered out of state and being titled using a tax date on or after July 1, 1998 are also exempt from all state and local parish/municipality tax. These buses shall be issued hire-bus or hire-passenger plates.

AUTHORITY NOTE: Promulgated in accordance with R.S. 47:305.50 and R.S. 47:321.

HISTORICAL NOTE: Promulgated by the Department of Public Safety and Corrections, Office of Motor Vehicles, LR 25:2257 (November 1999), amended LR 29:605 (April 2003).

§385. Exemption Certificate

A. The exemption certificate must be completed by the applicant and submitted along with proper title documentation and applicable fees. A separate exemption certificate is required for each vehicle and must contain a complete description of the vehicle, including year, make, and vehicle identification number.

B. For contract carrier buses, the applicant must also present proof in the form of a common carrier certificate or permit issued by the Federal Highway Administration.

AUTHORITY NOTE: Promulgated in accordance with R.S. 47:305.50 and R.S. 47:321.

HISTORICAL NOTE: Promulgated by the Department of Public Safety and Corrections, Office of Motor Vehicles, LR 25:2258 (November 1999).

§387. Business Location in Louisiana

A. If the vehicle is being titled in the name of a company, proof that the company has an established place of business in the state of Louisiana must be furnished. Unless it can be determined that the company has been issued an employer identification number (EIN) for a Louisiana-based company (EIN should begin with 72) and other vehicles have been registered in that company's name, two of the following items must be submitted as proof that the company has an established place of business:

1. a copy of the Tax Registration Certificate issued by the Louisiana Department of Revenue indicating the Louisiana Tax Identification Number;

2. a copy of the Articles of Incorporation and the Initial Report as filed with the Louisiana Secretary of State. These documents should be photocopied and returned to the applicant in the event he wishes to purchase an apportioned license plate;

3. a Certificate of Authority issued by the Louisiana Secretary of State authorizing an out-of-state based corporation to transact business in the state of Louisiana;

4. a copy of the applicant's occupational license;

5. a copy of a lease or rental agreement on property within the state of Louisiana, indicating the lessee is the same business as reflected on the exemption certificate.

B. If the vehicle is being titled in the name of an individual, proof must be furnished that the individual is a resident of the state of Louisiana. Unless it can be determined that the individual possesses a Louisiana driver's license and has other vehicles registered in his name, two of the following items must be submitted as proof that he is a resident of Louisiana:

1. a voter's registration card;

2. a receipt from the tax assessor's office in the parish where he resides, indicating the lessee is the same individual as shown on the exemption certificate;

3. a copy of a lease or rental agreement on property within the state of Louisiana, indicating the lessee is the same individual as shown on the exemption certificate;

4. three utility statements (electric, gas, water, telephone, or cable vision) for consecutive months indicating the applicant's name and address.

C. The code "IH" must be entered in the no-tax field to allow the exemption of state and parish/municipality sales tax for interstate commerce carriers.

AUTHORITY NOTE: Promulgated in accordance with R.S. 47:305.50 and R.S. 47:321.

HISTORICAL NOTE: Promulgated by the Department of Public Safety and Corrections, Office of Motor Vehicles, LR 25:2258 (November 1999).

§391. Administrative Actions

A. The department may suspend, cancel, or revoke any exemption granted pursuant to Subchapter C if the department determines that the person does not meet the eligibility requirements for the exemption, or if the person has submitted false, incorrect, incomplete, or misleading information in connection with his application for an exemption.

B. Each applicant as well as each person granted an exemption pursuant to this Subchapter shall maintain the records establishing the person's eligibility for the exemption at the Louisiana business address given in the application. Each applicant as well as each person granted an exemption pursuant to this Subchapter shall make his records available for inspection and copying to any representative of the department or of the Department of Revenue and Taxation during the hours of 8 a.m. to 5 p.m. Monday through Friday and at any other time the person is conducting business at the location where the records are stored. Additionally, each applicant as well as each person granted an exemption pursuant to this Subchapter shall make his business premises available for inspection by any representative of the department or of the Department of Revenue and Taxation during the hours of 8 a.m. to 5 p.m. Monday through Friday and at any other time the person is conducting business.

C. Any request for an administrative hearing to review any action, order, or decision of the department shall be in writing and submitted to the department within 30 days of the date the action, order or decision was mailed or hand delivered, as the case may be. The written request for a hearing shall be mailed to the:

Department of Public Safety and Corrections
Office of Motor Vehicles
Hearing Request, (at) P. O. Box 64886
Baton Rouge, Louisiana 70896-4886

or hand delivered to the:

Office of Motor Vehicle Headquarters (in)
Baton Rouge, Louisiana.

AUTHORITY NOTE: Promulgated in accordance with R.S. 47:305.50 and R.S. 47:321.

HISTORICAL NOTE: Promulgated by the Department of Public Safety and Corrections, Office of Motor Vehicles, LR 25:2258 (November 1999).

§393. Declaratory Orders

A.1. Any person desiring a ruling on the applicability of any statute, or the applicability or validity of any rule, to the regulation of the sales and use tax exemption of this Subchapter shall submit a written petition to the assistant secretary. The written petition shall cite all, constitutional provisions, statutes, ordinances, cases, and rules which are relevant to the issue presented or which the person wishes the assistant secretary to consider prior to rendering an order or ruling in connection with the petition. The petition shall be typed, printed or written legibly, and signed by the person seeking the ruling or order. The petition shall also contain the person's full printed name, the complete physical and mailing address of the person, and a daytime telephone number.

2. If the petition includes reference to a specific transaction handled by the department, or if the petition relates to the grant or denial of a sales and use tax exemption, then the person submitting the petition shall also submit proof that he has notified all of the persons involved in the transaction or issuance, revocation, cancellation, granting, or denial of the exemption by certified mail, return receipt requested. If the person is unable to notify the involved person or persons after otherwise complying with the notice requirement, he shall so state in his petition.

B. The assistant secretary may request the submission of legal memoranda to be considered in rendering any order or ruling. The assistant secretary or his designee shall base the order or ruling on the documents submitted including the petition and legal memoranda. If the assistant secretary or his designee determines that the submission of evidence is necessary for a ruling, the matter may be referred to a hearing officer prior to the rendering of the order or ruling for the taking of such evidence.

C. Notice of the order or ruling shall be sent to person submitting the petition as well as the persons receiving notice of the petition at the mailing addresses provided in connection with the petition.

D. The assistant secretary may decline to render an order or ruling if the person submitting the petition has failed to comply with any requirement in §393 of this Subchapter.

AUTHORITY NOTE: Promulgated in accordance with R.S. 47:305.50, R.S. 47:321, and R.S. 49:962.

HISTORICAL NOTE: Promulgated by the Department of Public Safety and Corrections, Office of Motor Vehicles, LR 25:2259 (November 1999).

Subchapter D. Title Transactions

§395. Donations by Manual Gift at a Louisiana Motor Vehicle Commission Licensed Dealer

A. The donation of a titled motor vehicle by manual gift as provided by *Civil Code* article 1543 and documented by delivery of the motor vehicle's previously issued certificate of title that is executed by the donor-owner may be submitted to the Office of Motor Vehicles in connection with a motor vehicle transaction by a Louisiana Motor Vehicle Commission licensed dealer.

B. Subsequent to donation of a titled motor vehicle by manual gift authorized in the previous paragraph, the licensed dealer shall cause the donor and the donee to execute the form approved by the department that memorialized the fact the donation was accomplished by manual gift. This completed form, together with the previously issued title, duly endorsed, shall accompany the paperwork submitted by, or on behalf of the dealer, to the Office of Motor Vehicles.

C. Any transaction, which includes a donation by manual gift, submitted by, or on behalf of the dealer, to the Office of Motor Vehicles, which does not include the completed form required in this Section, shall not be processed and shall be returned to the dealer who submitted the transactions.

D. Nothing in this Section shall prohibit a dealer licensed by the Louisiana Motor Vehicle Commission from submitting a transaction which includes a donation by authentic act.

E. Donations of motor vehicles not associated with a transaction by a dealer licensed by the Louisiana Motor Vehicle Commission shall be by authentic act.

AUTHORITY NOTE: Promulgated in accordance with R.S. 32:705.1.

HISTORICAL NOTE: Promulgated by the Department of Public Safety and Corrections, Office of Motor Vehicles, LR 40:2608 (December 2014).

§397. Water Damaged Vehicles

A. A motor vehicle whose power train, computer, or electrical systems have sustained water damage that does not meet the criteria for a salvage title or a certificate of destruction, shall be issued a branded title indicating the vehicle has sustained water damage.

B. The power train shall include the main components that generate power and deliver the power to the road surface, including but not limited to the engine, the transmission or transaxle including associated axles and CV joints, the drive shafts, and the differentials.

C. The insurance company, owner, or dealer, applying for the water damage brand on a motor vehicle which does not meet the criteria for a salvage title or certificate of destruction shall provide documentation satisfactory to the Office of Motor Vehicle documenting the value of the vehicle, the damages sustained, the circumstance that caused the damage, and the amount of the costs of the repairs to the vehicle which establish the vehicles eligibility for the brand authorized in this Section.

D. A vehicle which meets the criteria for a salvage title or a certificate of destructions shall not be issue the certificate of title with the water damage brand authorized in this section. A vehicle which meets the criteria salvage title or certificate of destruction shall be issued the respective title document associated with its damages and the circumstances that caused the damages.

AUTHORITY NOTE: Promulgated in accordance with R.S. 32:707(O).

HISTORICAL NOTE: Promulgated by the Department of Public Safety and Corrections, Office of Motor Vehicles, LR 40:2608 (December 2014).

Chapter 4. Specifications for Electronic Reporting Of Interlock Device Installation/Removal

§401. Introduction

A. Effective August 15, 2011, Act 192 of the 2011 Regular Session of the Louisiana Legislature requires ignition interlock device reports to be submitted electronically. The person whose driving privilege is restricted pursuant to this Section, or which has been reinstated pursuant to R.S. 32:667(I), shall have the system monitored by the manufacturer, at the manufacturer's expense, for proper use at least bi-monthly, and more frequently as the court may order, on the operation of each interlocking ignition device in the person's vehicles. A report of such monitoring shall be issued by the manufacturer to the court and the department within fourteen days after the system is monitored. However, the report issued to the department shall be in an electronic format specified by the department.

AUTHORITY NOTE: Promulgated in accordance with R.S. 32:378.2(H).

HISTORICAL NOTE: Promulgated by the Department of Public Safety and Corrections, Office of Motor Vehicles, LR 40:2604 (December 2014).

§403. Definitions

Authorized Manufacturer—name of manufacturers approved by State Police Applied Technology.

Business Days—business days are Monday through Friday, between 8 a.m. and 4:30 p.m. central time. *Business days* do not include Saturday, Sunday or state holidays, or any other holiday declared by the governor.

Department—Department of Public Safety and Corrections, Office of Motor Vehicles.

Edit Error—a record submitted by an authorized manufacturer unacceptable for filing purposes due to the absence of information in a required field or the presence of invalid information in the key data fields is an *edit error*. Key data fields are identified and detailed in §405. A record which is returned to an authorized manufacturer as an *edit error* is not a filing. The record shall be corrected and re-reported within 15 business days of the return-date.

Return Filing Report—a report prepared by the department for an authorized manufacturer following completion of processing and editing of data. The report will contain any error records or, if no errors are found, a message stating “No Errors in File”. It is the responsibility of the authorized manufacturer to review and take the necessary corrective action as required by these rules and regulations. If the file cannot be processed, no return report will be sent. The file must be corrected and all of the filing records must be resubmitted. None of the filing records submitted with an incomplete or incorrect header record will be accepted.

Test File Indicator—if the submitted file is a test file, the *test file indicator* must be set in the header record to insure that the test records are not uploaded to the database. The IT staff must be contacted to schedule a test prior to the test file being uploaded to the server.

AUTHORITY NOTE: Promulgated in accordance with R.S. 32:378.2(H).

HISTORICAL NOTE: Promulgated by the Department of Public Safety and Corrections, Office of Motor Vehicles, LR 40:2604 (December 2014).

§405. Record Formats

A. The following format shall be used by an authorized manufacturer for submitting electronic filing of the report required by R.S. 32:378.2(H).

1. Header Record

Char Pos	Type	Data Description	Format
1 - 4	Num (4)	Manufacturer Code	
5 - 12	Num (8)	Date Created	CCYYMMDD

Char Pos	Type	Data Description	Format
13 - 19	Num (7)	Number of Records in Filing	9999999
20 - 20	Alpha (1)	Test File Indicator	T (Test) or P (Production)
21 - 176	Alpha (156)	Filler	Spaces
177 - 177	Num (1)	Record Type	3 (Header)

2. Interlock Filing Record

Char Pos	Type	Data Description	Format
1 - 9	Num (9)	Driver's License Number	Right justified, zero fill if not available
10 - 49	A/N (40)	Driver Name	Last, First
50 - 57	Num (8)	Driver DOB	CCYYMMDD
58 - 77	A/N (20)	Driver Street	
78 - 92	Alpha (15)	Driver City	
93 - 94	Alpha (2)	Driver State	
95 - 99	Num (5)	Driver Zip Code	
100 - 116	A/N (17)	VIN	
117 - 119	A/N (3)	Installer ID Code	
120 - 139	A/N (20)	Manufacturer's Name	
140 - 159	A/N (20)	Machine Serial Number	
160 - 167	Num (8)	Installation Date	CCYYMMDD
168 -175	Num (8)	Removal Date	CCYYMMDD
176 - 176	Num (1)	Reporting Type	1, 2, 3, 4, or 5
177 - 177	Num (1)	Record Type	1 (Data Record)

AUTHORITY NOTE: Promulgated in accordance with R.S. 32:378.2(H).

HISTORICAL NOTE: Promulgated by the Department of Public Safety and Corrections, Office of Motor Vehicles, LR 40:2604 (December 2014).

§407. Data Requirements

A. Files. Authorized manufacturers may only send in one file per day to the secure DMZ move it server. This file must be named XXXX.txt where XXXX is equal to the manufacturer code number assigned to the authorized manufacturer by the department.

B. Records

1. Two types of records may be present on the file.

a. The first record in the file must be a header record and have record type = 3.

b. All subsequent records are the filing records and must have a record type = 1.

2. No trailer record is supplied. All records are 177 characters in length.

3. Record descriptions are in the Record Formats, §405 and the Record Description, §409.

C. Field Justification

1. Items with a field type of alpha or A/N should be left-justified and trailing characters space-filled.

2. Items with a field type of num should be right-justified and leading characters zero-filled.

D. Date Fields. The date fields, driver DOB, installation date and removal date must be reported in the format CCYYMMDD. For example, July 1, 2012 is entered as "20120701".

AUTHORITY NOTE: Promulgated in accordance with R.S. 32:378.2(H).

HISTORICAL NOTE: Promulgated by the Department of Public Safety and Corrections, Office of Motor Vehicles, LR 40:2605 (December 2014).

§409. Record Descriptions

A. Header Record. The header record has a record type = "3". It must be the first record on the filing. Filings will not be processed if the header record does not pass all edit checks. If an error is encountered in the header record, no return report will be sent back to the servicing agent:

1. manufacturer code—number assigned by DPS IT section to authorized manufacturer. This is a required field;

2. date created—this is the date the file was created. This is a required field;

3. number of records in filing—number of records to be processed (This number should not include the header record.);

4. test indicator—T in the header indicates a test file; P indicates a production file. This is a required field;

5. filler—unused. Should be space filled;

6. record type—use a "3". This is a required field.

AUTHORITY NOTE: Promulgated in accordance with R.S. 32:378.2(H).

HISTORICAL NOTE: Promulgated by the Department of Public Safety and Corrections, Office of Motor Vehicles, LR 40:2605 (December 2014).

§411. Interlock Filing Record

A. The following fields are required unless otherwise noted. The filing records must have a record type = "1". If an error on any of the required fields is encountered, a description of the error will be written to the return report. These records will not be processed and must be corrected and resent:

1. driver's license number—driver's license (required);

2. driver name—the name of the person whose driver's license is being submitted (required);

3. driver dob—the date of birth of the person whose driver's license is being submitted (required);

4. driver street—the street address of the person whose driver's license is being submitted (required);

5. driver city—the city in which the person whose driver's license is being submitted resides (required);

6. driver state—the state in which the person whose driver's license is being submitted resides (required);

7. river zip code—the zip code of the person whose driver's license is being submitted (required);

8. VIN—The vehicle identification number of the vehicle the interlock is placed in (required);

9. installer ID code—code assigned by manufacturer used to identify individual installers;

10. manufacturer's name—the manufacturer's name on the interlock device installed in the vehicle (required);

11. machine serial number—the serial number on the interlock device installed in the vehicle (required);

12. installation date—the date the interlock device was installed in the vehicle (required);

13. removal date—the date the interlock device was removed from the vehicle (required);

14. reporting type—reporting types are "1" = Removed, "2" = Tampered, "3" = Failed to start test, "4" = Rolling retest failed, "5" = Install (required);

15. record type—record type is "1" (required).

AUTHORITY NOTE: Promulgated in accordance with R.S. 32:378.2(H).

HISTORICAL NOTE: Promulgated by the Department of Public Safety and Corrections, Office of Motor Vehicles, LR 40:2605 (December 2014).

§413. Reporting Instructions

A. The Louisiana Department of Public Safety and Corrections utilizes the move it server as the method of exchanging electronic data for interlock installation/removal reporting. The "information exchange" service allows secure electronic data transfer between the department and each authorized manufacturer. Any authorized manufacturer not currently reporting to OMV on the move it Server shall send an e-mail a request to access this system to Interlock@dps.la.gov for the purpose of reporting interlock installations/removals electronically.

B. A test filing shall be submitted for all new companies. A test filing shall also be submitted when record format changes are made. Please notify the Information Technology Center before a test file is sent to allow for scheduling. Files will not be tested unless scheduled.

C. Authorized manufacturers may only file once per business day. The department will retrieve filings only once per day. Any filing not sent before this retrieval time will be considered filed on the next day.

D. After processing, information will be returned back to the reporting authorized manufacturer. The returned data can be accessed via the move it server.

E. It is the responsibility of the authorized manufacturer to read the returned filing, correct any errors and resend the corrected filings.

AUTHORITY NOTE: Promulgated in accordance with R.S. 32:378.2(H).

HISTORICAL NOTE: Promulgated by the Department of Public Safety and Corrections, Office of Motor Vehicles, LR 40:2606 (December 2014).

§415. Error Messages

A. The following error message will be sent for submissions by an authorized manufacturer:

1. driver name: "name required"—this is a required field. The correct format is last,first;

2. driver DOB:

a. "date of birth required"—this is a required field;

b. "DOB must be numeric"—this is a numeric field;

c. "DOB format is CCYYMMDD"—all dates are CCYYMMDD;

d. "DOB greater than today's date"—date of birth > process date;

3. driver street: "driver street required"—this is a required field;

4. driver city: "driver city required"—this is a required field;

5. driver state: "driver state required"—this is a required field;

6. driver zip code: "driver zip code required"—this is a required field;

a. driver zip code must be numeric"—this is a numeric field;

7. VIN: "VIN required"—this is a required field;

8. manufacturer's name: "manufacturer's name required"—this is a required field;

9. machine serial number: "serial number required"—this is a required field;

10. installation date: "installation date required"—this is a required field;

a. "installation date must be numeric"—this is a numeric field;

b. "installation date format is CCYYMMDD"—All dates are CCYYMMDD;

c. "installation date > today's date"—installation date cannot be in the future;

d. "installation date > removal date"—removal date cannot be prior to the installation date;

11. removal date: "removal date required"—this is a required field;

a. "removal date must be numeric"—this is a numeric field;

b. "removal date format is CCYYMMDD"—all dates are CCYYMMDD;

c. "removal date > today's date"—removal date cannot be in the future;

d. "removal date < installation date"—removal date cannot be prior to the installation date;

12. reporting type:

a. "reporting type is required"—this is a required field;

b. "reporting type is invalid"—this field must have a value of 1, 2, 3, 4 or 5;

13. record type: "record type required"—this is a required field.

AUTHORITY NOTE: Promulgated in accordance with R.S. 32:378.2(H).
HISTORICAL NOTE: Promulgated by the Department of Public Safety and Corrections, Office of Motor Vehicles, LR 40:2606 (December 2014).

§417. Contact Information

A. Procedural questions concerning this regulation should be referred to:

Mailing Address—
Attention: Impaired Driver Withdrawal Unit
LA DPS Office of Motor Vehicles
P.O. Box 64886
Baton Rouge, LA 70896

Email: Interlock@dps.la.gov
Phone Numbers: (225) 925-6146

B. Technical questions concerning this regulation should be referred to:

Mailing Address—
Attention: DMB Project Leader
Louisiana Dept. of Public Safety
Information Technology Center
8001 Independence Boulevard
Baton Rouge, LA 70806

Email: Interlock@dps.la.gov
Phone Number: (225) 925-6226

AUTHORITY NOTE: Promulgated in accordance with R.S. 32:378.2(H).
HISTORICAL NOTE: Promulgated by the Department of Public Safety and Corrections, Office of Motor Vehicles, LR 40:2606 (December 2014).

Subchapter B. Credit for Suspension Time or Condition of Reinstatement Time for Installation of an Ignition Interlock Device

§451. Requirements to Receive Credit toward Suspension Time or Condition of Reinstatement Time

A. Effective August 1, 2019, an individual who had an ignition interlock device installed by an interlock manufacturer approved by Louisiana State Police, Applied Technology Unit, as a requirement of bail, a part of a pre-trial diversion program, or a term of suspended or deferred sentence pursuant to Code of Criminal Procedure Article 894, for an offense involving the operation of a motor vehicle while under the influence of alcohol, drugs, or a combination of alcohol and drugs and is arrested or subsequently convicted for such an offense, shall receive credit towards suspension time or any reinstatement requirement that may be imposed upon complying with the requirements of this Subchapter.

B. A person seeking to receive credit towards suspension time for having an approved and functioning ignition interlock device installed on the motor vehicle the person operates shall:

1. make a request at your local Office of Motor Vehicle;

2. submit the completed application for ignition interlock restriction form signed by the applicant;.

3. submit documentation from the court having jurisdiction over the prosecution of the person for an offense involving the operation of a motor vehicle while under the influence of alcohol, drugs, or a combination of alcohol and drugs, or from the prosecutor administering the pre-trial diversion program, that the person is required to install an ignition interlock device on the motor vehicle as a requirement of the court or the prosecutor, as the case may be;

4. submit the completed form from the ignition interlock manufacturer verifying two or more of the following violations have not occurred within a 30-day period:

a. tampering with the ignition interlock device;

b. circumventing the ignition interlock device;

c. failure to bring the ignition interlock device in for required service;

d. failure to take or pass a re-test;

e. failure to pass a breath test;

f. use of the emergency override feature without justification;

g. unauthorized removal of the device.

C. Applicant may apply for a driver's license with the interlock restriction provided their record is valid status. They will be required to show the interlock installment/lease agreement, proof of registration and insurance, and will be required to pay a duplicate license fee to add the restriction to the driver's license.

AUTHORITY NOTE: Promulgated in accordance with R.S. 32:378.2(M)
HISTORICAL NOTE: Promulgated by the Department of Public Safety and Corrections, Office of Motor Vehicles, LR 46:187 (February 2020).

§453. No Credit toward Suspension Time if Subsequently Charged or Arrested

A. If the individual is charged or arrested for any offense involving the operation of a motor vehicle while under the influence of alcohol, drugs, or a combination of alcohol and drugs, during the period in which the individual is required to have an ignition interlock device as a requirement of bail, a part of a pre-trial diversion program, or a term of a suspended or deferred sentence pursuant to Code of

Criminal Procedure Article 894, then credit will not be given.

AUTHORITY NOTE: Promulgated in accordance with R.S. 32:378.2(M)

HISTORICAL NOTE: Promulgated by the Department of Public Safety and Corrections, Office of Motor Vehicles, LR 46:187 (February 2020).

§455. Credit Time
(Prospective only from August 1, 2019)

A. No credit for having an ignition interlock device will be given for any suspension time or condition of reinstatement requirement prior to August 1, 2019, the effective date of Act 396. Any credit for having an ignition interlock device will be given for any suspension time or condition of reinstatement requirement will only start from August 1, 2019.

AUTHORITY NOTE: Promulgated in accordance with R.S. 32:378.2(M)

HISTORICAL NOTE: Promulgated by the Department of Public Safety and Corrections, Office of Motor Vehicles, LR 46:187 (February 2020).

§457. CDL Disqualifications

A. No credit shall be given for any disqualification period on commercial driving privileges.

AUTHORITY NOTE: Promulgated in accordance with R.S. 32:378.2(M)

HISTORICAL NOTE: Promulgated by the Department of Public Safety and Corrections, Office of Motor Vehicles, LR 46:187 (February 2020).

Chapter 5. Records

Subchapter A. Fees

§501. Motor Vehicle and Drivers License Records

A. Pricing and conditions for computerized database information are as follows: all initial inquiries will be directed to Rex McDonald at 925-6031. Rates will be updated each fiscal year or as statutes change. For one time requests, a minimum deposit of one half the estimated cost is required. For contractual agreements which require multiple updates over a period of time, the customer must provide a bond or a certified check covering three billing cycles of the estimated amount.

B. Pricing policy for motor vehicle and drivers license master records utilizing the standard utility programs available for one time is as follows:

1. Parish and Municipal Governments—Requesting Less Than 25,000 Records

5,000 or less records	$100
10,000 or less records	$200
15,000 or less records	$300
20,000 or less records	$400
25,000 or less records	$500

2. State, Parish and Municipal Governments—Requesting Greater Than 25,000 Records

Basic programming fee	$500
First 50,000 records	$ 0.01 each
Next 1,00,000 records	$ 0.005 each
Next 850,000 records	$ 0.0025 each
All additional records	$ 0.00125 each

3. All Nongovernmental Bodies

Basic Programming Fee	$500
First 50,000 records	$ 0.02 each
Next 1000,000 records	$ 0.01 each
Next 850,000 records	$ 0.005 each
All additional records	$ 0.0025 each

4. Cost of Supplies

C. Pricing policy for driver history data is $5 per history as per statute.

D. Pricing policy for contractual agreements which require multiple updates over a period of time is as follows:

1. cost of programmer work hours at $30 per hour;

2. setup cost for data control and operations as applicable ($20 per hour);

3. flat rate charge of $0.02 per record;

4. cost of supplies.

E. Pricing policy for customized one time requests is as follows:

1. cost of programmer work hours at $30 hour;

2. record pricing policy reflected in Subsection B;

3. cost of supplies.

F. Pricing policy for subscriptions to continually updated printed reports requested by nongovernmental bodies will be determined on an individual basis.

G. Pricing policy for copies of preprinted in-house statistical reports is $1 per page plus postage.

H. Copies of an individual's own public records requested by an indigent citizen of Louisiana shall be furnished free of charge.

AUTHORITY NOTE: Promulgated in accordance with R.S. 49:952.

HISTORICAL NOTE: Promulgated by the Department of Public Safety, Office of Management and Finance, LR 9:569 (August 1983).

Subchapter B. Privacy

§551. Statement of Intent and Purpose

A. The purpose of Subchapter B is to implement the federal Driver's Privacy Protection Act of 1994 (DPPA) (Title XXX of P.L. 103-322) and to substantially comply with the DPPA.

AUTHORITY NOTE: Promulgated in accordance with R.S. 32:401 et seq., and R.S. 32:853.

HISTORICAL NOTE: Promulgated by the Department of Public Safety and Corrections, Office of Motor Vehicles, LR 23:990 (August 1997).

§553. Definitions

A. As used in Subchapter B, the following terms have the meanings described below.

Assistant Secretary—the assistant secretary of the Department of Public Safety and Corrections, Public Safety Services, Office of Motor Vehicles.

Authorized Recipient—a person, corporation, partnership, limited liability company, or other business entity who has received all or part of the personal information contained in the records of an individual from the department pursuant to a written request authorized by Subchapter B, and includes any requester who is subsequently approved to receive records or personal information on individuals pursuant to a contract as provided in Subchapter B.

Consented Disclosure—personal information disclosed to a requester who has demonstrated that he has obtained the written consent of the person who is the subject of the personal information.

Department—the Department of Public Safety and Corrections, Public Safety Services, Office of Motor Vehicles.

Disclose, Disclosure—when used in the context of describing the release of personal information, the process to make known or make available personal information. The release of information through this process shall be limited to the three categories as defined in §553 as follows:

a. a consented disclosure;

b. a permitted disclosure; or

c. a required disclosure.

Motor Vehicle Record—any record that pertains to a motor vehicle operator's permit, motor vehicle title, motor vehicle registration, or identification card issued by the department which contains personal information.

Permitted Disclosure—personal information that may be disclosed as follows:

a. for use by any government agency in carrying out its functions, or any private person or entity acting on behalf of a federal, state, or local agency in carrying out its functions;

b. for use in connection with:

i. motor vehicle or driver safety and theft;

ii. motor vehicle emissions;

iii. motor vehicle product alterations, recalls, or advisories;

iv. performance monitoring of motor vehicles, motor vehicle parts, and dealers;

v. motor vehicle market research activities, including survey research; and

vi. removal of nonowner records from the original owner records of motor vehicle manufacturers;

c. for use in the normal course of business by a legitimate business or its agents, employees, or contractors but only to verify the accuracy of personal information submitted by the individual to the business, its agents, employees, or contractors, and if such information as so submitted is not correct or is no longer correct, to obtain correct information, but only for the purposes of preventing fraud by, pursuing legal remedies against, or recovering on a debt or security interest against the individual;

d. for use in connection with any civil, criminal, administrative, or arbitral proceeding in any federal, state or local court or agency or before any self regulatory body, including the service of process, investigations in anticipation of litigation, and the execution or enforcement of judgments or orders, or pursuant to an order of a federal, state, or local court;

e. for use in research activities and for use in producing statistical reports, so long as the personal information is not published, redisclosed, or used to recontact individuals;

f. for use by any insurer or insurance support organization, or by a self-insured entity, or its agents, employees, or contractors, in connection with claims investigation activities, antifraud activities, rating or underwriting;

g. for use in providing notice to the owners of towed or impounded vehicles;

h. for use by licensed private investigation agency, or licensed security service for any purpose permitted under this Section;

i. for use by an employer or its agents or insurer to obtain or verify information relating to a holder of a commercial driver's license that is required under the Commercial Motor Vehicle Safety Act of 1986;

j. for use in connection with the operation of private toll transportation facilities;

k. for bulk distribution for surveys, marketing or solicitation if the individual has not prohibited the disclosure of the individual's personal information;

l. for use by a requester, if the requester demonstrates it has obtained the written consent of the individual to whom the information pertains;

m. for any other use specifically authorized by state law related to the operation of a motor vehicle or public safety.

Person—an individual or natural person, and does not include a corporation, partnership, limited liability company or other business entity.

Personal Information—all information contained in the records of the Office of Motor Vehicles that identifies a person including an individual's photograph or computerized image, Social Security number, driver's license number, name, address (but not the five digit zip code), telephone number, and medical or disability information. Personal information does not include information on vehicular accidents, driving or equipment related violations, and driver's license or registration status.

Record—all books, papers, photographs, photostats, cards, films, tapes, recordings, electronic data, computer tapes, computer disks, printouts, other documentary materials regardless of physical form or characteristics.

Redisclose, Redisclosure—when used in the context of describing the release of personal information, the disclosure by an authorized recipient of records or personal information, but only for purposes authorized by Subchapter B.

Requester—the person, corporation, partnership, limited liability company or other business entity, or any federal or state agency submitting a written or other authorized request to the department for an individual's personal information.

Required Disclosure—personal information that shall be disclosed for use in connection with matters of motor vehicle or driver safety and theft, motor vehicle emissions, motor vehicle product alterations, recalls, or advisories, performance monitoring of motor vehicles and dealers by motor vehicle manufacturers, and removal of nonowner records from original owner records of motor vehicle manufacturers to carry out the purposes of the Automobile Information Disclosure Act, the Motor Vehicle Information and Cost Saving Act, the National Traffic and Motor Safety Act of l966, the Anti-Car Theft Act of 1992, and the Clean Air Act.

AUTHORITY NOTE: Promulgated in accordance with R.S. 32:401 et seq., and R.S. 32:853.

HISTORICAL NOTE: Promulgated by the Department of Public Safety and Corrections, Office of Motor Vehicles, LR 23:990 (August 1997).

§555. Prohibition on Disclosure and Use of Personal Information from Department Records

A. Pursuant to the DPPA, no records of the department containing personal information, nor the personal information contained in those records shall be disclosed by the department or any officer, employee, agent or contractor to any person except as provided in Subchapter B.

B. An authorized recipient shall resell or redisclose records or personal information contained in an individual's motor vehicle record only for purposes defined as permitted disclosures in Subchapter B. Any authorized recipient reselling or redisclosing records or personal information shall maintain records of such resale or redisclosure for a period of five years from the date of such resale or redisclosure. Such records shall be made available to an authorized representative of the department promptly upon request if the records are not currently in use, but no later than one business day after the receipt of a request from the department's representative. The records required to be maintained by the authorized recipient pursuant to this Section shall be stored in Louisiana and shall contain the following information on the person to whom the personal information was resold or redisclosed and on the personal information that was so sold or disclosed:

1. the full name of the person including any trade names or aliases;

2. the complete physical and mailing addresses of the person;

3. the name of an individual as a contact person if the person to whom the resale or redisclosure was made is a business entity;

4. the telephone number including area code of the person;

5. a description of the records or personal information resold or redisclosed of sufficient detail as to allow the identification of those individuals whose records or personal information was resold or redisclosed; and

6. the permitted purpose for which the information will be used.

AUTHORITY NOTE: Promulgated in accordance with R.S. 32:401 et seq., and R.S. 32:853.

HISTORICAL NOTE: Promulgated by the Department of Public Safety and Corrections, Office of Motor Vehicles, LR 23:992 (August 1997).

§557. Procedure for Requesting Personal Information

A. All requests seeking disclosure of personal information shall be in writing, except electronic requests submitted to the department pursuant to a contract authorized by Subchapter B.

1. All written requests shall be mailed to the assistant secretary or his designee at:

Box 64886
Baton Rouge, Louisiana 70896-4886

2. At his option, the requester may hand deliver the written request to the Office of Motor Vehicles Headquarters in Baton Rouge, Louisiana.

3. The requester shall provide such information as may be required by the department to establish the requester's identity and the requester's status as a person who may receive the requested personal information including:

a. the requester's full name;

b. any aliases or trade names;

c. the requester's complete mailing and physical addresses and telephone number, including area code; and

d. the name of a contact person if the requester is a business entity.

4. In order to facilitate a request, the requester should provide sufficient information in his request to establish his status as a person who may receive personal information under DPPA.

B. All requests seeking disclosure of personal information shall be processed on a first come, first serve basis, unless the assistant secretary or his designee determines that there is good cause for a request to be handled in a different order.

C.1. The assistant secretary or his designee shall determine the requester is a person, corporation, partnership, limited liability company, or other business entity who may receive personal information pursuant to DPPA.

2. A requester seeking personal information through a permitted disclosure or a required disclosure shall, upon establishing to the satisfaction of the assistant secretary or his designee, that the requester may receive the requested personal information, and upon the payment of all fees and costs, be provided the requested personal information.

D. Consented Disclosure

1. In the case of a consented disclosure, the requester shall notify the person about whom personal information is sought:

a. of the request; and

b. that the information will not be released unless the individual waives his right to privacy under DPPA.

2. The notice of the request to the person about whom personal information is requested shall specifically state all personal information that is being sought.

3. The notice of the request shall also give full information about the requester including but not limited to:

a. the requester's full name as well as any aliases or trade names;

b. the requester's complete mailing and physical addresses, and the requester's telephone number including area code;

c. the name of a contact person if the requester is a business entity; and

d. purpose for requesting the personal information.

4.a. No request will be processed by the department until the requester has obtained the waiver from the person about whom the personal information is sought.

b. The original waiver together with a copy of the notice sent to the person about whom the personal information was sought shall accompany the original request for disclosure.

E. The failure of a requester to comply with the requirements contained in §557 shall be grounds to deny the request to disclose personal information.

AUTHORITY NOTE: Promulgated in accordance with R.S. 32:401 et seq., and R.S. 32:853.

HISTORICAL NOTE: Promulgated by the Department of Public Safety and Corrections, Office of Motor Vehicles, LR 23:992 (August 1997).

§559. Administrative Actions

A. Any authorized recipient who has access to motor vehicle records through a contract, permit, license, or other authorization issued by the department or any other agency that is a part of the Department of Public Safety and Corrections, shall be governed by the rules contained in Subchapter B.

B.1. The violation of any rule contained in Subchapter B, or the violation of any provision of the DPPA by an authorized recipient of motor vehicle records through a contract, permit, license or other authorization issued by the department may serve as grounds for the initiation of an administrative action to revoke, suspend or cancel any contract, permit, license or other authorization issued by the department.

2. Such violation may also serve as grounds for the initiation of an administrative action to impose a fine or other penalty against such person.

AUTHORITY NOTE: Promulgated in accordance with R.S. 32:401 et seq., and R.S. 32:853.

HISTORICAL NOTE: Promulgated by the Department of Public Safety and Corrections, Office of Motor Vehicles, LR 23:993 (August 1997).

§561. Contracts

A. The department may enter into contracts for the sale of personal information if the requested disclosure is a permitted disclosure or a required disclosure.

1. All contracts for individuals' records or the personal information contained in the individuals' records shall contain all of the requirements contained in §561.

2. Any contract not meeting the requirements of §561 shall be of no effect and shall establish no obligation on the department to comply with the terms of such contract.

B.1. Such contracts may include the sale and disclosure of such information through electronic or online means.

2. Such contracts shall allow the requester continual access to the department's records during the period of the contract condition upon the requester making timely payment of all fees and costs due under the contract as well as all fees and costs required by state law or Subchapter B.

C. All contracts shall contain the following requirements:

1. all contracts shall be for a specified term not exceeding one year, except that a contract may provide for a renewal term on the anniversary date of the contract:

a. the anniversary date shall be one year from the commencement date of the contract as required in §561, and thereafter annually on that date for the life of the contract;

b. there shall be no more than five renewal terms;

c. the contract shall provide that in the case of automatic renewal terms, the department shall be given the option of canceling the contract upon 30 days written notice to all parties to the contract;

d. the contract shall specify the commencing date for the initial term and the ending date for the initial term;

2. the failure to make a payment when due may be grounds to terminate the contract upon 30 days written notice to all parties to the contract;

3. the contract shall be subject to termination if any part of the contract is contingent on the appropriation of funds to fulfill any part of the contract, and if the legislature fails to appropriate sufficient funds for the continuation of the contract or if the appropriation is reduced by the veto of the governor, or if the appropriation is reduced by any other means authorized by law;

4. the records or personal information obtained pursuant to a contract shall not be resold or redisclosed by the requester accept as expressly authorized in the contract. A violation of this §561.C.4 may serve as grounds for the immediate termination of the contract. Any person whose contract is terminated pursuant to this §561.C.4 shall not be eligible to enter into any subsequent contract pursuant to §561 for a period of five years except upon a waiver by the assistant secretary after a showing of good cause by the person so disqualified;

5. any resale or redisclosure authorized pursuant to a contract shall be only for the purposes defined as permitted disclosures in Subchapter B;

a. any authorized recipient who resells or redisclosures records or personal information shall keep records of such resale or redisclosure for a five-year period from the date of the resale or redisclosure;

b. such records shall include the following information on persons to whom a resale or redisclosure is made and the records or information that was resold or redisclosed:

i. the full name of the person including any trade names or aliases;

ii. the complete physical and mailing addresses of the person;

iii. the name of an individual as a contact person if the person to whom the resale or redisclosure was made is a business entity;

iv. the telephone number including area code of the person;

v. a description of the records or personal information resold or redisclosed of sufficient detail as to allow the identification of those individuals whose records or personal information was resold or redisclosed; and

vi. the permitted purpose for which the information will be used;

6.a. in the case of records or personal information disclosed electronically or through an online service, the authorized recipient shall use only equipment approved by the department and in locations approved by the department;

b. the authorized recipient shall submit a written plan to the department which shall provide for the security and the integrity of the records and personal information received pursuant to the contract;

c. the authorized recipient shall implement the plan as approved by the department with any amendments prior to receiving any records or personal information from the department;

7. the authorized recipient shall develop and implement a plan to insure that the employees, agents, and representatives of the authorized recipient are familiar with the requirements of the DPPA and the rules in Subchapter B;

8. the authorized recipient shall not acquire title, ownership, or any other interest in the records and personal information received pursuant to the contract except that the authorized agent may use, resell, or redisclose the information as authorized in the contract, the DPPA, and Subchapter B;

9.a. the authorized recipient shall promptly notify the assistant secretary or his designee of any possible violation of the DPPA, Subchapter B, or the contract entered into pursuant to §561;

b. the authorized recipient shall cooperate with the department in any legal action to stop or prevent any violation of the DPPA or Subchapter B;

10. no authorized recipient shall be granted:

a. a right of exclusive use of any record or personal information; or

b. an exclusive right to resell or redisclose records for any permitted purpose;

11. the applicable law for the contract shall be the law of Louisiana;

12.a. the authorized recipient shall keep its records regarding the contract in Louisiana in a location approved by the assistant secretary and, upon the request of any authorized representative of the department, shall promptly make the records available if the records are not currently in use;

b. in no event shall the records be produced later than one business day after receipt of the request;

c. an authorized representative of the department may conduct an audit of the authorized recipient records at least once a year;

d. an authorized representative of the department shall be authorized to conduct an inspection of any premises of the authorized recipient used in connection with the contract or where the authorized recipient's records are stored. Such an inspection shall be during the normal business hours of the department unless the parties agree otherwise;

13. the contract shall include any other provisions required by the assistant secretary, and such provision shall be enforceable in the same manner as if such provision were included in §561.

AUTHORITY NOTE: Promulgated in accordance with R.S. 32:401 et seq., and R.S. 32:853.

HISTORICAL NOTE: Promulgated by the Department of Public Safety and Corrections, Office of Motor Vehicles, LR 23:993 (August 1997).

§563. Representations Regarding Records and Personal Information

A. No authorized recipient shall represent the records or personal information which the authorized recipient may use, resell, or redisclose as official records of the department. The authorized recipient may represent that the records or personal information have been obtained from the department and that the records or personal information accurately reflects what was contained in the department's records on the date the records or information were obtained. Any permitted resale or redisclosure shall contain or be accompanied with a statement that the records or personal information contained therein are not the official records of the department.

AUTHORITY NOTE: Promulgated in accordance with R.S. 32:401 et seq., and R.S. 32:853.

HISTORICAL NOTE: Promulgated by the Department of Public Safety and Corrections, Office of Motor Vehicles, LR 23:994 (August 1997).

§565. Official Use of Personal Information

A. Nothing in Subchapter B shall be construed as limiting or prohibiting the use of personal information by an employee of the Department of Public Safety and Corrections for official purposes as authorized by the DPPA and state law.

B. The department may enter into cooperative endeavors with other state and federal agencies providing for the access, use and release of personal information as authorized by the DPPA and state law.

AUTHORITY NOTE: Promulgated in accordance with R.S. 32:401 et seq., and R.S. 32:853.

HISTORICAL NOTE: Promulgated by the Department of Public Safety and Corrections, Office of Motor Vehicles, LR 23:994 (August 1997).

Chapter 6. Rulemaking Petitions

§601. Submission of a Rulemaking Petition

A. In accordance with R.S. 49:953(C)(1), any interested person may petition an agency to adopt a new rule, or to amend or repeal an existing rule.

B. To petition the Office of Motor Vehicles for the adoption, amending or repeal of any rule, an interested person shall submit in writing the Department of Public Safety's petition for rulemaking form to Department of Public Safety, Office of Motor Vehicles, P.O. Box 64886, Baton Rouge, LA 70896, Attn: Rulemaking Petition, which contains the following basic information organized and captioned:

1. the petitioner's name and address;

2. the specific rulemaking agency to be petitioned within the Department of Public Safety as listed on the form;

3. a brief description of the facts or justification supporting the petitioner's request for the adoption of a rule or the amending of a rule that has already been adopted;

4. suggested specific language or language setting forth the substance of the proposed rule or rule change that is being requested, which may be attached to, or in addition to, the petition for rulemaking form;

5. a copy of each and every document upon which the petitioner bases the petitioner's request for a rule or a citation of the information and where it can be easily obtained for review by the rulemaking agency;

6. the petitioner's signature and date of signature.

C. The Department of Public Safety's petition for rulemaking form can be found on the official website of the Department of Public Safety, Office of Motor Vehicles.

AUTHORITY NOTE: Promulgated in accordance with Act 454 of the 2018 Regular Legislative Session and R.S. 49:953, et seq.

HISTORICAL NOTE: Promulgated by the Department of Public Safety and Corrections, Office of Motor Vehicles LR 46:1689 (December 2020).

§603. Consideration of a Rulemaking Petition

A. Upon receipt of a petition for rulemaking form, the OMV Commissioner shall forward the petition to his agency designee. The agency designee shall review the petition for completeness pursuant to the requirements listed in LAC 55:III:601. B. If the petition is found to be complete, the agency designee shall consider the petition.

B. Within 90 days of receipt of the petition, the OMV Commissioner or his agency designee shall either:

1. initiate rulemaking procedures to adopt a new rule, or to amend an existing rule; or

2. notify the petitioner in writing of the denial to proceed with rulemaking, stating the reason(s) therefore.

C. Whenever the OMV Commissioner or his agency designee determines that a public hearing should be held prior to the adoption of any rule or rule change, a notice of the meeting date, time and place will be published in the *Louisiana Register*.

AUTHORITY NOTE: Promulgated in accordance with Act 454 of the 2018 Regular Legislative Session and R.S. 49:953, et seq.

HISTORICAL NOTE: Promulgated by the Department of Public Safety and Corrections, Office of Motor Vehicles, LR 46:1689 (December 2020).

Chapter 7. Louisiana Motor Vehicle Safety Inspection Program

§701. Foreword (Formerly §803)

A. The inspection of vehicles as prescribed in the Louisiana motor vehicle inspection law is conducted in privately-owned businesses which have been approved by the Louisiana Department of Public Safety and Corrections. Although these approved inspection stations are privately owned businesses, the inspection of vehicles in compliance with the law is not entirely a private matter. During the course of performing these inspections, the station and its personnel are acting as representatives of the state of Louisiana. The guiding principal of station personnel should be, and must be, providing honest and efficient service to the citizens of our state.

B. Official motor vehicle inspection station operators and employees should be courteous and patient when explaining that the requirements of the motor vehicle inspection laws are designed to promote safety. It should be clearly understood by all employees that the primary function of the inspection station is not an arbitrary enforcement of the law but rather the advancement of highway safety.

C. All inspection station personnel must adopt the attitude that they sell safety. They must also bear in mind that the placement of one inspection certificate on an unsafe vehicle may be the cause of a serious crash. They owe a duty to themselves, their families, other vehicle owners and operators not to jeopardize lives through error, carelessness or indifference.

D. The official motor vehicle inspection station license may be revoked if any station owner, operator or employee fails to achieve and maintain a priority standard of service to the motoring public.

E. Each official motor vehicle inspection station shall give priority to customers seeking motor vehicle inspections. Reasonable time shall be considered when the inspector is committed to other duties, (clean up, hazardous situation).

AUTHORITY NOTE: Promulgated in accordance with R.S. 32:1304-1310.

HISTORICAL NOTE: Promulgated by the Department of Public Safety and Corrections, Office of State Police, Safety Enforcement Section, LR 25:2421 (December 1999), amended by the Department of Public Safety and Corrections, Office of State Police, LR 38:2550 (October 2012), LR 42:428 (March 2016).

Chapter 8. Motor Vehicle Inspection

Subchapter A. General

§801. Definitions

A. As used in this Chapter, the following terms have the meanings described below.

Department—Department of Public Safety and Corrections, Office of State Police, Department of Public Safety Police.

Deputy Secretary—Deputy Secretary of the Department of Public Safety and Corrections, Public Safety Services.

Person—an individual, partnership, corporation, limited liability company, or other legal entity.

AUTHORITY NOTE: Promulgated in accordance with R.S. 32:1304-1310.

HISTORICAL NOTE: Promulgated by the Department of Public Safety and Corrections, Office of State Police, Safety Enforcement Section, LR 25:2421 (December 1999), amended by the Department of Public Safety and Corrections, Office of State Police, LR 38:2550 (October 2012).

§803. Penalties for Non-Compliance (Formerly §701)

A. Civil penalties shall be assessed as described in R.S. 32:1312.

1. If an inspection station or mechanic inspector receives three written violation notices within a 12-month period, this shall be grounds to remove said inspection station or mechanic inspector from the Motor Vehicle Safety Inspection Program. This in no way intends to impede the ability of the department from removing an inspection station or mechanic inspector at any time with proper cause.

2. The department shall impose civil penalties after affording the accused an opportunity for a fair and impartial hearing to be held in accordance with the Administrative Procedure Act.

3. Failure to pay civil penalties that have been finally adjudicated and upheld may result in the immediate suspension of the station or inspectors license. The department may prohibit the station from purchasing inspection certificates, and/or selling, issuing or conducting inspections until the penalty has been satisfied.

4. All licensees and applicants shall be current in the payment of all penalties and fees owed to the Department of Public Safety as well as other state and/or local government agencies. Companies failing to comply with this requirement are subject to having their station's license suspended or revoked..

B. To maintain the integrity of the program and the safe operation of vehicles of the motoring public, the following violations are considered serious offenses. The mechanic inspector's license and/or the motor vehicle station's license may be revoked immediately upon a finding by the department of such violations. Upon the revocation of the station license/or mechanic inspector's license, he/she shall

have the right to request a hearing in reference to the violations but the license shall remain revoked until the date of the hearing and the ruling from the administrative law Judge. The request for an administrative hearing shall be in writing and must be received by the department within 30 days from the date the license of the station/mechanic inspector was revoked:

1. allowing uncertified mechanics to inspect;

2. illegal sale of inspection certificates. This shall include the sale of fraudulent MVI certificates, rejection certificates or any insert that is attached to the MVI certificate;

3. involvement in criminal activity of a felony nature;

4. intentionally falsifying a report (written or electronic);

5. intentionally overcharging for inspections.

AUTHORITY NOTE: Promulgated in accordance with R.S. 32:1310 and 32:1312 et seq.

HISTORICAL NOTE: Promulgated by the Department of Public Safety and Corrections, Office of State Police, LR 21:184 (February 1995), amended LR 38:2550 (October 2012), LR 42:428 (March 2016), amended by the Department of Public Safety and Corrections, Office of State Police, Transportation and Environmental Safety Section, LR 42:1531 (September 2016), amended by the Department of Public Safety and Corrections, Office of State Police, LR 44:1631 (September 2018).

Subchapter B. Safety Inspections

§805. Requirements

A. The Department of Public Safety, upon application and issuance of a motor vehicle inspection license, will authorize a station to conduct certain type inspections. The inspections will be designated by the station number issued to it. Below is an example of a station number.

EXAMPLE NUMBER P03255A-ABCDG

(1)	(2)	(3)	(4)
P	03255	A	BCDG

Position (1) Denotes type of station- P=Public
D=Dealer
F=Fleet
G=Government

Position (2) Denotes station number

Position (3) Denotes Troop Area the MVI station is located in.

Position (4) Denotes the type of inspection the station is allowed to perform-

B-School Buses

C-Comercial Motor Vehicle Inspections

D-Non-attainment emission testing

G-General inspections-(automobile, trucks, suv's, trailer

M-Motorcycles

B. Classes of Inspection Stations. The classes of Official Motor Vehicle Inspection (MVI) Stations authorized in Louisiana are:

1. Public Station. Stations authorized by the Louisiana Department of Public Safety and Corrections to inspect any and every vehicle presented for inspection. When warranted and approved by the department, certain stations may be designated to inspect only specific classes of vehicles. When authorizing a public station to inspect only a certain class vehicle, the class of vehicle to be inspected and justification for each authorization shall be noted in the remarks section of the station application form. Such stations will display a sign immediately adjacent to the official Motor Vehicle Inspection sign designating the classes of vehicles which can be inspected. The designation of a specific class of vehicle to be inspected by a station may be as follows:

a. trucks and trailers only;

b. passenger vehicles and light duty trucks only;

c. motorcycles only; and

d. stations inspecting commercial vehicles and school buses are required to have special authorization from the department.

2. Dealer Station. Any person, association or corporation licensed as a dealer of vehicles which are subject to registration may be licensed as an official MVI dealer inspection station. These stations may only conduct inspections of both new and used vehicles owned by the dealer which are for sale or demonstration. A notation will be made in the remarks section of the application form indicating what type of vehicles is to be inspected. When a dealer is authorized to inspect, it is mandatory that all vehicles sold as new or used must be properly inspected and a valid inspection certificate affixed thereto as prescribed by the official rules and regulations under LAC 55:III.Chapters 7 and 8.

3. Fleet Station. Any motor vehicle repair or maintenance shop operated or maintained by a person, firm or corporation in whose name 10 or more vehicles are licensed under the provisions of R.S. 47:462, may be designated as an official fleet MVI station. Fleet stations may inspect only those vehicles registered to or under bona fide lease to the company designated as an official fleet inspection station;

4. Government Station. A town, municipality, city, parish or state agency to which the department has granted authority to inspect vehicles owned and registered to these government agencies. These stations will not be approved unless they have their own repair shop; a school board may be granted authority to inspect and certify vehicles operated or contracted by that board.

5. Non-attainment area stations are inspection stations receiving specialized training and licensing. Only non-attainment area stations are permitted to inspect vehicles registered within this area that are subject to the inspection and maintenance (I/M) program as provided in 32:1306(B)(3) and LAC 55:817. The nonattainment area consists of five parishes. These parishes are designated by the four-digit domicile code on the registration. Domicile codes beginning with 03 (Ascension Parish), 17 (East Baton

Rouge), 24 (Iberville Parish), 32 (Livingston Parish), or 61 (West Baton Rouge) are within the non-attainment area.

C. Request for Appointment as an Official Inspection Station

1. A written request must be submitted to the department at the main office located at 7919 Independence Blvd., Baton Rouge, LA 70806 in order to become an official MVI station. The request can be mailed or faxed. A representative of the department will be assigned to inspect the premises and interview the personnel to determine that all minimum requirements are met.

a. A background check including a criminal history check will be conducted on each applicant applying for a Motor Vehicle Inspection Station License. Applicants with felony backgrounds may be refused to be licensed.

2. Should a person, firm or corporation currently operating a motor vehicle inspection station make application to add commercial inspections at their location, a thorough investigation and evaluation of the performance of the existing station will be conducted. Should the investigation show that the existing station has been operated within the rules and regulations of the motor vehicle inspection program, and the owner/operator has demonstrated a willingness and desire to fulfill all of the obligations and responsibilities as an MVI station operator, the application for the new station, if all other requirements are met, may be approved.

3. Any station application that is found to be falsified for any reason shall result in a denial of the station's application.

D. Minimum Requirements for a Motor Vehicle Inspection Station

1. The following minimum requirements must be met prior to approval as an official MVI station:

a. the prospective MVI station must project an image of a clean and orderly place of business;

b. MVI station locations must comply with current local occupational, zoning and building inspection codes, and must be current at the time of application or occupation

i. must submit a copy of the occupational license for the MVI station;

ii. if the building is leased, the lessee must provide a copy of the written lease agreement and keep a copy on file at the station. The lease must be at least a minimum of 12 months and include verbiage that the lessee is allowed to conduct motor vehicle inspections. Verbal leases and subleases will not be allowed;

c. must have a covered vehicle stall or bay, with a roof and two permanent connecting walls, large enough to accommodate the inspection of a full-sized motor vehicle.

E. Renewal of Motor Vehicle Inspection Station License

1. All motor vehicle inspection licenses expire on December 31 of each calendar year.

a. Completed renewal packets should be returned to the department 30 days prior to the expiration of the station/mechanic license.

i. All outstanding civil penalties must be paid prior to issuance of the new MVI license.

ii. If all required paperwork and fees are not submitted, the station license will not be renewed.

b. If the motor vehicle inspection station license has not been renewed by December 31, then starting January 1 of the following calendar year, the station must stop conducting all MVI inspections until the license has been renewed and the new license is received by the station from the MVI officer.

c. If the MVI station fails to renew their MVI license by January 31 following the expiration of their expired MVI license, then on February 1 the station license shall be revoked until the following conditions are met:

i. must submit paperwork as required for a new station and must meet all new station/mechanic inspector requirements as stated in this Section. It is the station's responsibility to contact the office if it did not receive its station renewal and complete and return it before the new calendar year;

ii. must pay all outstanding civil penalties.

F. Space Requirements

1. All motor vehicle inspections, including the brake check, must be conducted on the premises licensed and must be conducted on a hard solid surface (concrete or asphalt, not just concrete washout or reclaimed asphalt, etc.). A minimum of 150 feet long by 8 feet wide will be required to conduct the brake test, it will be level as well as free from major defects, and must be conducted in a safe location. Officers may reject any applicant if the station does not have the required space or the location is deemed to be unsafe to safely conduct inspections.

2. Commercial and/or School Bus Stations (only) Inspection Stall or Bay. All commercial and/or school bus stations shall be equipped with a stall or bay that is large enough to accommodate a combination tractor-trailer commercial motor vehicle of legal dimensions. Legal dimensions for a combination tractor-trailer are as follows, overall length 75ft, width 8ft 6in, and height 14ft. The stall or bay must have a roof and two permanent connecting walls. The stall or bay shall have a smooth, level, free from major defects hard surface (concrete or asphalt, not just concrete washout or reclaimed asphalt, etc.) that is able to withstand the weight of an 80,000 lbs combination tractor-trailer. A pit in the stall or bay the length of a combination tractor-trailer is encouraged, but will not be required. Combination tractor-trailers entering or leaving the inspection site shall be able to do so without repeated adjustment. An example would be the vehicle pulling into and backing out of a position to enter or leave a location, especially when it involves doing so from or onto a public roadway. A vehicle having to make multiple attempts to

enter from a public roadway would cause a safety issue that affects the general motoring public and will not be allowed.

3. If an applicant requests to become both a general and commercial/school bus inspection station, it shall meet the requirements of both Paragraphs 1 and 2 of Subsection F, Space Requirements.

G. Equipment Required for Safety Inspections

1. The following required equipment will be readily accessible during inspection hours and in good working order:

a. windshield scraper for removing old certificates;

b. numerical stamps (#1 through #12) 1 inch in size, an X stamp, and a black indelible ink stamp pad;

c. tire depth gauge;

d. measuring tape at least 6 feet in length;

e. flashlight;

f. tint meter (two-piece type);

g. adjustable mirror; and

h. a telephone number listed under the name of the station as it appears on the station license, with a telephone located at the place of business. All stations in the non-attainment area shall have the ability to access a telephone and the world wide web simultaneously during normal hours of operation;

i. on board diagnostic systems test equipment and evaporative system test equipment which includes gas cap pressure test equipment as per the United States Environmental Protection Agency (U.S. EPA) specifications. Stations must have such approved equipment readily accessible and in good working order. This equipment must be in or near the inspection area. The provisions of this Subparagraph shall only apply to inspection stations located in the non-attainment area. Any inspection station incorporated into a new DEQ emissions control program non-attainment area shall adhere to U.S. EPA specifications;

j. mechanic's creeper. The provisions of this Subparagraph shall only apply to stations that conduct commercial and school bus inspections;

k. soapstone marker. The provisions of this Subparagraph shall only apply to stations that conduct commercial and school bus inspections;

l. two wheel chocks (commercial and school bus inspection only);

m. floor jack or lift or two jack stands. This equipment must be capable of lifting and safely holding up the vehicle being inspected;

n. a current Federal Motor Carrier Safety regulation handbook (updated within one calendar year) as prescribed by: the U.S. Department of Transportation, Federal Motor Carrier Safety Administrations, parts 40, 303, 325, 350-399 (commercial and school bus inspections only);

o. brake chamber tool (commercial and school bus inspections only);

p. tire pressure gauge;

q. a current e-mail address from the station;

r. additional equipment may be required by the department as it may be deemed necessary, for the proper operation of an inspection station. The department shall give prior written notice of any additional equipment requirements. After such written notice is given, such additional equipment requirement shall be enforced as if included in these rules.

H. Responsibility of Station Owner or Operator. Upon application for designation as an official MVI station, the owner/operator has pledged himself to:

1. act as directed by the department when inspecting vehicles in accordance with these rules;

2. any changes or updates to Title 55, Public Safety (LAC 55), can be located on the Division of Administration public website: www.doa.la.gov/Pages/osr/lac/books.aspx All inspectors and station owners are required to check for updates twice a year or when advised to do so by the department;

3. use only employees authorized and licensed by the department to perform the actual inspection of motor vehicles;

4. conduct honest, thorough and efficient inspections in accordance with motor vehicle inspection laws and the department's regulations;

5. maintain in good working order all required tools and equipment described in the minimum requirements, and to cease operations immediately and contact the Department of Public Safety, MVI Section when this condition is not met;

6. maintain a clean and orderly place of business and shop. The owner/operator is responsible for his employees in this respect;

7. refrain from the use of alcohol or drugs while on duty. MVI stations shall not be located on the premises or property where alcoholic beverages are sold;

8. keep an adequate supply of all types of inspection and rejection certificates and all necessary forms on hand at all times; adequate supply shall be considered 15 certificates or more of each type;

9. perform inspections and affix certificates of inspection only in an approved bay or stall at the business location designated on the station license, affix valid certificates of inspection only to those vehicles which have been properly inspected and have passed the safety and/or emission requirements;

10. have at least one approved mechanic inspector on duty to conduct all types of inspections that are offered by that station. At a minimum these inspections will be

conducted during the hours listed by a station for each normal business day.;

11. must be open a minimum of 40 hours per week. The days and hours the station is open will be determined by the station owner and approved by the department. The days and hours of operation must be posted on the MVI sign;

a. if a station is required to close or there is not an inspector on-duty for any reason during its posted hours, the station owner or operator must notify the MVI Section by phone, fax or e-mail before closing or ceasing inspections. The station will also post a notice of closure on a main door or in a main window that the station is closed or that an inspector is not available. The notice will include the date and approximate time it will reopen or the inspector will be available;

12. ensure that all mechanic inspectors attend all meetings, training programs and various schools required by the Louisiana Department of Public Safety and Corrections;

13. be responsible for the actions of his mechanic inspectors in all matters relating to motor vehicle inspections. All civil penalties will be addressed to the station and the payment of penalties will be the responsibility of the owner/operator. The station owner/operator is responsible for all violations and fines concerning the operation of his/her station including the actions of his/her mechanic inspectors;

14. immediately follow all directives and instructions issued by the department;

15. properly inform all employees of the rules and regulations set forth herein. Continued supervision of all mechanics authorized to inspect motor vehicles must be maintained; and

16. contact the Motor Vehicle Inspection Section of the Louisiana Department of Public Safety and the Department of Environmental Quality of any changes in mechanic inspectors.

I. Requirements for Approval of Mechanic Inspectors. Before any mechanic can perform inspections, the department shall review the mechanic's qualifications and may authorize him to inspect. The following requirements shall be met by each applicant prior to being approved as a mechanic inspector:

1. shall be at least 18 years of age;

2. a criminal history check shall be conducted on all new and renewal applicants who are requesting to be licensed as a mechanic inspector. The following will be grounds for rejection of a mechanic inspector application:

a. any felony conviction within ten years of application, unless the felony is a crime of violence, a felony is defined by R.S. 14:2(A)(4);

b. a felony conviction for an offense related to the operation of a motor vehicle within five years of application, unless the felony is a crime of violence;

c. any felony conviction as defined by R.S. 14:2(B) as a crime of violence;

d. any person who is registered as a sex offender or a child predator;

e. any new mechanic's application that is found to be falsified for any reason shall result in a denial of the individual applying. The denial period is at the discretion of the department;

f. any existing mechanic inspector who is convicted of a felony while licensed will be suspended or revoked in accordance with the above Subparagraphs a-e of this Paragraph;

g. if an existing mechanic inspector has been arrested for a felony, he will be suspended until the charges have been adjudicated. In the event there is only inspector licensed to conduct inspections, the station will also be suspended. Before the suspension is lifted, the inspector will provide the department with official certified court documents that show the inspector has been cleared of all felony charges;

h. if an existing mechanic inspector does not have a current certification/accreditation he shall be suspended until the certification/accreditation is again current.

3. shall be able to read and write the English language. They shall be able to complete MVI certificates and reports accurately and legibly;

4. shall possess a valid Louisiana operator's license. The operator's license shall not be subject to any order of suspension, revocation or cancellation or any other order or action which prevents the issuance of a duplicate or renewed operator's license. An approved mechanic inspector residing in a bordering state or those on active military duty shall furnish a valid operator's license from their resident state along with a copy of their driving record. The suspension, revocation, or cancellation of a mechanic inspector's operator's license shall be grounds to suspend his authority to inspect vehicles. A mechanic inspector shall notify the department immediately of such suspension, revocation, or cancellation of his operator's license;

5. shall successfully complete a training program offered by a state accredited and department approved post-secondary educational institution (which shall include community colleges and vocational-technical schools). The instructor of this program shall possess at least two years of previous automotive/truck mechanic experience or be an ASE-certified master technician. The curriculum of this training program shall be subject to review of, and approval by, the department to ensure inclusion of all aspects of the Motor Vehicle Inspection Program. A mechanic inspector employed by a station approved to inspect school buses and commercial vehicles shall also be properly trained in those areas prior to licensure. A mechanic inspector to be employed by a station within the five parish nonattainment area must first successfully complete special training related to emissions testing. A mechanic inspector whose license has not been current for a 12-month period shall successfully

complete a new training program in order to renew his license;

6. a mechanic may be approved to inspect at more than one location. A separate application and fee for each location must be submitted;

7. upon completion of the training program, and submission of the mechanic inspector application's current fee, the mechanic will be certified as a mechanic inspector. The department will re-issue the station license with the new inspectors name noted on the license. The inspector may be required to show proficiency and knowledge of the inspection procedures before he/she is allowed to conduct inspections even after attending the class. A mechanic inspector must have successfully completed the MVI school from which he/she is to be licensed or have been licensed by the department within the previous 12 months. If not, the mechanic inspector must attend the motor vehicle inspection class that he wishes to be certified in.

8. Commercial and/or School Bus Stations. The following requirements shall be met by each applicant prior to being approved as a mechanic inspector for stations that are authorized as commercial and/or school bus:

a. shall meet the same requirements outlined in Subsection I of this Section, except as stated here in;

b. shall be a current ASE (automotive service excellence) certified diesel mechanic or have an equivalent accreditation. Proof shall be provided to the department for review that the mechanic is currently certified and again after every reaccreditation period has been renewed, depending on the type of certification. Proof of current ASE certification or an equivalent type accreditation shall be kept on file at each inspection location for each inspector, for department review. The department has the right to deny a mechanic's application due to the type of certification/accreditation. Denial by the department will take place if it believes the type of certification/accreditation to be less than the current industry standards, as determined by the department;

c. shall have at least five years of experience as an ASE certified diesel mechanic or an equivalent accreditation. The mechanic shall provide proof of such experience and certification to the department for review. Proof shall be kept on file at each inspection location for each inspector, for department review.

NOTE: for this section an accredited diesel mechanic will have, but not be limited to, auto maintenance and light repair, engine repair, manual drive train and axles, suspension and steering, brakes, light vehicle diesel engines, and diesel engines certifications. In addition for School Bus inspectors, accreditations must include the same areas as above and include School Bus certifications.

J. Duties and Responsibilities of Authorized Mechanic Inspectors

1. The authorized mechanic inspector shall:

a. always properly and thoroughly conduct an official inspection of vehicles presented for that purpose;

b. only affix inspection certificates to an approved vehicle. By doing this, he is placing a certificate of safety on the vehicle, indicating it is safe for operation on the highway;

c. be sure that no life may be jeopardized by his error, carelessness or indifference;

d. owe a duty to his employer, who has pledged to assist in safeguarding the lives of motorists, to ensure against the operation of unsafe vehicles;

e. inform the owner/operator of the actual condition of his vehicle after completion of an inspection;

f. verify that all equipment is of an approved type and is properly adjusted as prescribed. Evaporative system test equipment must be properly calibrated as recommended by the manufacturer;

g. perform each inspection with the understanding that he assumes full responsibility for the quality of the inspection when he signs the inspection certificate and places his name on the station's weekly/monthly log report;

h. always remember that he has been authorized to inspect vehicles because he has demonstrated the knowledge to act as an agent of the state of Louisiana when inspecting vehicles;

i. abide by the inspection laws, rules, regulations and/or procedures. Failure to do so by an authorized mechanic inspector may result in a civil penalty being imposed and could result in the permanent revocation of inspection privileges and may subject him/her to criminal and or civil prosecution;

j. when changing employment from one inspection station to another, the mechanic inspector or station shall inform the department that he is no longer employed by the inspection station;

k. determine whether the vehicle being presented for inspection should be inspected under the normal inspection procedures, school bus regulations or commercial criteria. The inspector shall not examine a vehicle he is not certified to inspect.

2. The department reserves the right to withdraw for cause its authorization of any mechanic inspector or to re-examine a mechanic inspector at any time. If a mechanic inspector has been unlicensed for one year or more he must be re-trained before inspecting any vehicle.

K. Approval as an Inspection Station

1. No inspection station shall be appointed as an official motor vehicle inspection station until all of the requirements have been met.

2. If the application is approved, the applicant will be notified. Once the applicant provides a permit fee, an MVI station license will be issued to the applicant. The station will be required to pay an annual renewal fee. An applicant for a public motor vehicle inspection station shall also provide a $5,000 bond.

3. When all conditions have been met, the station license will be mailed or delivered to the station by a representative of the department appointed to supervise the station. The station license will be presented to any law enforcement officer upon demand.

L. Any applicant who is issued a new station or mechanic inspector license by the department shall be required to serve a one-year probationary period. The department may revoke the license for any violation under the Motor Vehicle Inspection Program contained in this Chapter.

AUTHORITY NOTE: Promulgated in accordance with R.S. 32:1304-1310.

HISTORICAL NOTE: Promulgated by the Department of Public Safety and Corrections, Office of State Police, Safety Enforcement Section, LR 25:2422 (December 1999), amended LR 27:2260 (December 2001), repromulgated LR 28:344 (February 2002), amended by the Department of Public Safety and Corrections, Office of State Police, LR 38:2550 (October 2012), LR 42:429 (March 2016), LR 44:1631 (September 2018).

§807. Operation as an Official Motor Vehicle Inspection Station

A. Change of Name, Location and/or Ownership

1. Persons operating under a motor vehicle inspection station license contemplating a change of name, location and/or ownership must notify the department in writing before a change is made. All changes must be approved by the department prior to being made by the station. A change in location and/or ownership will require that the new owner/location must meet the current requirements in LAC 55:III.Chapters 7 and 8 of the Motor Vehicle Inspection Program.

2. The new location or owner shall meet all requirements under §805.D and F of this Chapter (minimum requirements for a motor vehicle inspection station and space requirements).

B. Going Out of Business or Discontinuance of Inspections

1. Prior to going out of business or discontinuing inspections, a motor vehicle inspection station owner/operator must immediately notify the department. Either occurrence shall result in the cancellation of the motor vehicle inspection station license. All unused inspection and rejection certificates, along with the motor vehicle inspection station license and all mechanic licenses, must be returned to the department.

C. Official Motor Vehicle Inspection Sign (Public Stations Only)

1. All public motor vehicle inspection stations will be required to display an official motor vehicle inspection sign that must conform to the examples listed herein. The sign shall contain the following language: "Official Motor Vehicle Inspection Station" and shall display the state of Louisiana official seal, with a solid border around the outer perimeter of the sign. The language and state seal shall be displayed as per the pictured example listed as 1. The background of the sign must be orange in color, specifically traffic cone orange (Hex color code value - FF7221 = RGB color code value - 255,114,33). Any language, the state seal, and the border must be black in color. The part of the sign that contains the official language, the state seal, and the border must measure at minimum 18 inches wide by 24 inches high. Any language must be a minimum of 3 inches in height. Any language must be in the font style of “Haettenschweiler”. The sign must be displayed in such a manner as to be easily seen and readily distinguishable as an official motor vehicle inspection station by the general motoring public.

2. Display of Inspection Hours and Prices

a. The days and hours of operation shall be displayed on the official MVI sign. The days and hours shall be displayed as per the pictured example listed as 2. (See Subparagraph 3.a. of this Subsection.)

b. The price of all relevant inspections conducted by a station shall be displayed on the official MVI sign. (i.e. emissions, commercial, school buses, etc.) If the station conducts emission inspections, it shall also display the price of such inspections. The prices shall be displayed as per the pictured example listed as 3. (See Subparagraph 3.a. of this Subsection.)

c. Inspection hours and prices shall be displayed either above or below the official MVI sign in the same manner listed in Subsection C.1. of this Section (i.e. color, size, font etc.).

3. If the inspection station is restricted to a certain class of vehicle, another section shall be added to the official Motor Vehicle Inspection sign designating which vehicles are to be inspected. Stations authorized to inspect commercial vehicles and/or school buses must display a sign stating this. Additional sections shall be displayed either above or below the official MVI sign in the same manner listed in Subsection C.1. of this Section (i.e. color, size, font etc.) as per the pictured example listed as 4.

a. Official Motor Vehicle Inspection Sign Examples

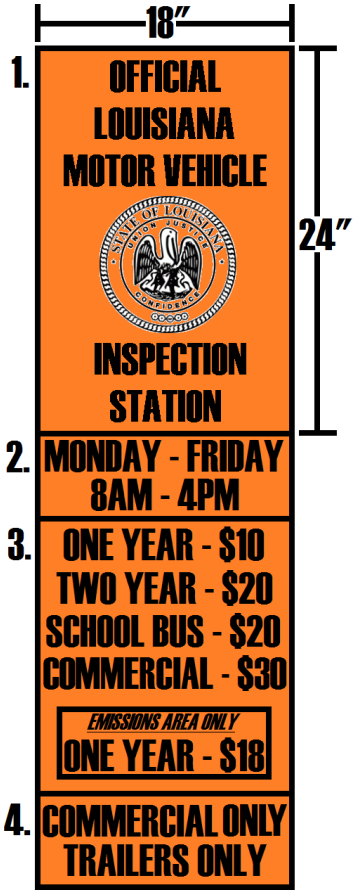

D. Periods of Inspection

1. All vehicles inspected under the provisions of R.S. 32:1301 through R.S. 32:1314 (motor vehicle inspection law) shall be inspected at least bi-annually.

a. Effective January 3, 2005, the department will implement a two-year inspection certificate program. During the initial phase of the program, automotive dealers of new cars and light trucks, which possess current inspection station licenses, shall be authorized to affix a two-year inspection certificate to every new passenger car or light truck sold. Where the registration of a vehicle indicates the domicile of the owner is in a parish that has been placed on the nonattainment list for ozone standards by the United States Environmental Protection Agency, that vehicle shall not be eligible for a two-year inspection certificate.

b. The fee for inspection of a passenger car or light truck and all other vehicles shall be $10 for a one-year certificate and $20 for a two-year certificate except in non-attainment parishes. The owner has the option of requesting either a one- or two-year certificate.

c. Vehicles that are registered inside the non-attainment area and/or vehicles that are registered outside the non-attainment area that are presented for inspection in the non-attainment area that fall within the guidelines of LAC 55:III.817.B shall be issued a one-year certificate only and be assessed an $18 inspection fee.

i. Cars, light duty trucks, and trailers registered or inspected in the non-attainment area that do not meet the criteria for the enhanced emission testing as stated in LAC 55:III.817.B can at the owners discretion be issued a one- or two-year certificate as stated in Subparagraph D.1.a of this Section.

2. The inspection period shall begin January 1 of each year.

3. The re-inspection month shall be determined by the month indicated on each particular vehicle's previous inspection certificate.

4. A vehicle presented for inspection in a month other than the expiration month noted on the previous inspection certificate shall be issued a certificate with the month the new inspection was performed.

5. Vehicles which have had windshields replaced and have a valid inspection certificate need not be re-inspected, but must carry the original certificate in the vehicle and produce it upon demand. The certificate must not be voided or mutilated and must be legible on both sides. This in no way prohibits the owner/operator from having the vehicle re-inspected after installation of the new windshield.

6. Vehicles which have had inspection certificates lost, stolen or damaged must be re-inspected. The fee may be charged for this inspection.

E. R.S. 32:1306(G) Place of Inspection

1. Notwithstanding any law, rule or administrative policy to the contrary, official MVI stations shall not be required to reserve a service bay or stall for the exclusive purpose of conducting motor vehicle inspections, but such stall or bay must be cleared and available within 20 minutes from the time an inspection is requested.

2. Mechanic inspectors shall only conduct motor vehicle inspections within a bay or stall that has been approved by the department. Mechanic inspectors shall only conduct braking tests on an area 150 feet long by 8feet wide that has been approved by the department as a brake test area.

3. Inspection and rejection certificates shall be issued to a vehicle only by an authorized, licensed mechanic inspector. This will only be done within a bay or stall that has been approved by the department at an authorized inspection station.

F. Ordering Inspection/Rejection Certificates

1. All orders for inspection or rejection certificates should be directed to the local Office of Motor Vehicles.

2. Demands for inspection or rejection certificates should be anticipated before the station's supply is depleted. Every motor vehicle inspection station will be required to have 15 of each type certificates or more on hand at all times. (Example: one and two year general, as well as commercial certificates if applicable)

3. Except as otherwise provided in LAC 55, Part III, Chapter 8, inspection and rejection certificates are not transferable from one Motor Vehicle Inspection station to another. However, report forms, requisition forms and stamps may be borrowed from another station.

4. Only authorized commercial Motor Vehicle Inspection stations with a current license will be permitted to purchase commercial inspection certificates. Each inspection station shall have only one person designated to purchase inspection certificates from the Office of Motor Vehicles. Only commercial inspection stations will be allowed to purchase commercial stickers.

5. Motor vehicle inspection certificates and rejection certificates, and requisition forms may be obtained from the Office of Motor Vehicles.

6. If a station submits funds which are returned NSF from the bank, the station license shall be suspended until the Office of Motor Vehicles receives the funds and penalties associated with the NSF check.

a. If the station does not satisfy the NSF check within 30 days from date of suspension, the station's license shall be permanently revoked and the station will have to re-apply as a new station once all funds and penalties have been received by the Office of Motor Vehicles. The station will have to meet all present requirements as a new station applicant.

b. If the owner of the MVI station is also the owner of the station's property, a license will not be issued to any other applicant who applies for a license on that property until the Office of Motor Vehicles receives the funds and penalties associated with the NSF check.

G. Lost or Stolen Inspection/Rejection Certificates

1. All inspection/rejection certificates and inserts are the property of the Louisiana Department of Public Safety and Corrections and must be safeguarded against loss. They must be kept in a secure place under lock and key, available only to the mechanic inspector. (Inspection/rejection certificates can only be placed on an inspected vehicle.)

2. Each inspection station will be accountable for each inspection/rejection certificate and inserts it receives from the department. Lost or stolen certificates must be accounted for on the log report by numerical listing. In lieu of the inspection information, the word "lost" or "stolen" must be noted on the log report by that certificate number.

3. Should an inspection/rejection certificate or insert be lost or stolen, the department must be notified immediately. If a theft is suspected of an inspection or rejection certificate, the local law enforcement agency shall be asked to investigate the theft and the MVI station must forward a copy of the police report to the department.

4. The loss of any certificates may be grounds for the imposition of a civil penalty or revocation of the station license. Theft of certificates or possession of stolen certificates may result in prosecution of the person(s).

H. Warning Notices. A written warning may be issued by a representative of the department for any infraction of the rules and regulations. This will become a permanent part of the station's file and will be a basis for determining the issuance of a civil penalty, suspension or revocation.

I. Motor Vehicle Inspection Log Report

1. All entries must be legible and made in ink only. The audit number of the inspection or rejection certificates issued must be listed in numerical order and must be shown on the report. All other required information must be provided for the vehicle inspected. Vehicle information will be obtained from the registration. The operator's license number must be taken from the driver's license of the person presenting the vehicle for inspection and not from the registration. In addition to the foregoing all blanks on any log sheets will include all related information. Examples include information related to each station, dates of each week, mechanic inspector(s) name, signatures with date, inspection totals, etc.

a. Stations that are required to maintain log sheets shall maintain the log sheets for 36 months.

i. General MVI Stations. A separate log shall be kept for the one- and two-year certificates.

Exception: Log sheets are not required to be utilized if a station is required to enter the inspection information on the DEQ computer system.

ii. Commercial MVI Stations. The station must maintain a copy of each commercial log sheet.

iii. School Bus MVI Stations. The station must complete and maintain a copy of each school bus inspection checklist.

2. Torn, voided or damaged inspection or rejection certificates must be recorded on the log report. All information required shall be listed on the log sheet and the station shall write torn, voided, or damaged in the signature block. The torn, voided or damaged inspection/rejection certificates shall be attached to the log sheet.

a. stations in the non-attainment area who utilize the DEQ computer system shall also keep a log of all torn, voided, or damaged inspection/rejection certificates and emission inserts. The non-attainment station must comply with Paragraphs 1 and 2 of this Subsection. The non-attainment station that issues a certificate due to the challenge station advising the station to issue a MVI certificate must use the same log as stated above.

3. Falsifying information on any official document, including the inspection report, or computer is a criminal offense. Felony charges may be brought against anyone providing fraudulent information on an inspection report or forging anyone's signature.

4. Dealer, fleet, public, and government Motor Vehicle Inspection stations will no longer be required to submit log reports to the department.

5. Log reports shall be kept in the log book at the Motor Vehicle Inspection station for 36 months. These reports shall be available for inspection by department personnel or law enforcement officers. After 36 months, a station may destroy the log sheets by burning or shredding.

6. Stations in the non-attainment area which are required to submit their inspection information electronically must do so in real time.

a. Stations in the non-attainment area that are licensed to inspect commercial vehicles must maintain a copy of each commercial log sheet for 36 months.

7. Official motor vehicle inspection stations can obtain copies of the log sheets from the Louisiana State Police website at www.lsp.org. Weekly and Commercial forms must be printed on legal size paper (14” wide X 8.5” high). School bus forms may be printed on letter size paper (11” high X 8.5” wide). Copies of log sheets may be made, but they must be made from current state issued log sheet and contain the same information, in the same order.

AUTHORITY NOTE: Promulgated in accordance with R.S. 32:1304-1310.

HISTORICAL NOTE: Promulgated by the Department of Public Safety and Corrections, Office of State Police, Safety Enforcement Section, LR 25:2424 (December 1999), amended 27:2260 (December 2001), repromulgated LR 28:345 (February 2002), amended LR 30:2859 (December 2004), amended by the Department of Public Safety and Corrections, Office of State Police, LR 38:2552 (October 2012), LR 42:433 (March 2016), amended by the Department of Public Safety and Corrections, Office of State Police, Transportation and Environmental Safety Section, LR 43:538 (March 2017), LR 44:1633 (September 2018).

§809. General Inspection Requirements

A. Fees for Inspection

1. The fee for safety and commercial inspections will be the current fee set by law for each inspection performed, whether it was approved or rejected. No sales tax or late penalty fees will be collected on inspections.

2. A rejected vehicle is entitled to one free re-inspection if returned to the same inspection station within 30 days.

B. Repairs or Adjustments

1. The owner of a vehicle is under no obligation to have defects corrected by the inspection station. The owner may have the vehicle repaired where he chooses or may repair the vehicle himself. The inspection station is only required to perform a complete and proper inspection.

C. Issuance of Inspection Certificates

1. An inspection certificate will be issued for every vehicle inspected which passes the safety and/or emission requirements. The month that a certificate is issued shall be indicated by an insert placed in the appropriate area of the certificate. The year the certificate expires will also be indicated by an insert placed in the appropriate block on the certificate. All of the information on the back of the sticker must be filled in with black indelible ink. The certificate will be firmly attached to the lower left-hand corner of the windshield as viewed from the driver's seated position. Under no circumstances will an inspection certificate be applied to the windshield without the month and year of expiration being noted in the appropriate blocks provided.

2. Mechanic inspectors shall fill in all requested information on the back of the inspection sticker and sign in the appropriate space using a black ink pen.

3. When inspecting motorcycles, motor-driven cycles, trailers and semi-trailers, an "X" will be stamped on the face of the inspection certificate, between the month and year insert. Under no circumstances will the stamp cover the month nor the year of expiration insert or the audit number of the inspection certificate. Inspection certificates of this type will be attached to the registration certificate for the vehicle.

4. All trailers will be considered a separate inspection and a certificate will be issued for each. A separate fee will be charged for each vehicle inspected. The inspection certificate for a trailer will never be placed on the windshield of the towing vehicle.

5. Each inspection shall be a complete inspection. All of the items noted within these rules and regulations shall be inspected.

6. Pre-inspections cause hardship for both you and the customer and will not be allowed.

7. Only year inserts (issued by the Office of Motor Vehicles) shall be placed on MVI certificates. Under no circumstance shall a station stamp or write the year on the certificates.

8. Inserts must be properly affixed to the sticker with the month and year in the proper area on the sticker.

D. Issuance of Rejection Certificates

1. When a vehicle is presented for inspection and fails to pass the safety or emission standards, the current fee will be charged for the service of inspecting the vehicle. The owner or operator will be advised of the defects causing the vehicle to fail inspection.

a. When a vehicle is presented for inspection and the owner/operator requests a one- or two-year inspection and the vehicle is rejected, the station must charge for the sticker that was requested.

2. A rejection certificate is valid for a time period of 30 days from the date of issuance. The owner or operator of the rejected vehicle is allowed this 30 day period to make the necessary repairs or replacements which will place the vehicle in compliance. If the vehicle presents no hazard to the public, it may be used for normal activities. If the vehicle presents a definite hazard to the public, a restricted 20 mile limitation on usage may be imposed (see Subsection E, Issuance of Restricted Rejection Certificate).

3. When a rejected vehicle is returned to the same inspection station within 30 days of issuance, the inspector is required to check only the items previously found defective

unless other obvious defects are noted. There is no charge for this re-inspection provided that the defects are corrected and the vehicle is returned to the same inspection station within the 30 day time period. If the vehicle is taken to another inspection station, a complete inspection is to be performed and another fee is required.

4. Only one rejection certificate may be issued to a vehicle. Under no circumstances shall any station issue a second rejection certificate to a vehicle.

5. An inspection station may not issue a rejection certificate solely because the station is out of inspection certificates. If the station's supply of inspection certificates becomes depleted, the station must completely cease inspecting until a new supply of certificates is obtained.

6. All rejection certificates must be entered in the weekly log report in numerical order and must be accounted for. The log report must indicate the items found defective by making a notation in the appropriate blocks provided. In the non-attainment area, the same information shall be entered in the station’s computer. The reverse side of the rejection certificate must also indicate the defective items found.

7. Should the owner or operator of a rejected vehicle refuse to accept the rejection certificate, it will be noted as such on the log report. The completed rejection certificate will be attached to the log report and kept with the station. In the non-attainment area, the station shall keep a file for all rejection certificates that have been refused.

8. The rejection certificate must be filled out in ink only. It will be noted on the reverse side of the rejection certificate, the date of inspection, a brief description of the vehicle and the expiration date of the rejection certificate. The face of the rejection certificate will be stamped with the number of the month in which the vehicle was inspected.

9. The rejection certificate will be affixed to the lower left-hand corner of the windshield as viewed from the driver's seated position. The owner or operator will be told by the mechanic inspector of the 30 day expiration of the certificate and what items caused the vehicle to fail inspection. The owner or operator will be advised of the procedure for re-inspection.

10. If the vehicle is returned for re-inspection within the 30 day limit and the defective items have been corrected, and for some reason the station cannot re-inspect the vehicle, the fee collected at the time of rejection must be returned to the owner or operator.

11. If the vehicle fails inspection due to an emission system defect, the reverse side of the rejection certificate will be marked to indicate which system failed.

E. Issuance of Restricted Rejection Certificates

1. If a rejected vehicle presents a definite hazard to the public, the vehicle's usage shall be restricted. A restricted rejection certificate shall be issued limiting the vehicle's usage to 20 miles. The owner or operator still has 30 days to repair the defective item(s). The vehicle should only be used to be repaired, inspected or returned to the owner or operator's residence. The face of the rejection certificate will be marked with the number of the month it is issued along with an X stamped next to it. The mileage at which the rejection will expire will be placed on the face of the certificate. The date of expiration will also be noted on the certificate.

2. A vehicle would be classified as restricted when one or more of the following items causes a rejection. This does not eliminate the fact that a combination of defects may also render the vehicle unsafe and, therefore, restricted:

a. no liability insurance;

b. steering;

c. tires, wheels and rims;

d. braking system;

e. tail lights or stop lights; or

f. exhaust systems.

AUTHORITY NOTE: Promulgated in accordance with R.S. 32:1304-1310.

HISTORICAL NOTE: Promulgated by the Department of Public Safety and Corrections, Office of State Police, Safety Enforcement Section, LR 25:2426 (December 1999), amended by the Department of Public Safety and Corrections, Office of State Police, LR 38:2553 (October 2012), LR 42:434 (March 2016).

§811. Inspection Procedures

A. The mechanic inspector shall record the expired sticker number on the log report then remove the expired sticker prior to continuing with the inspection. The expired motor vehicle inspection sticker must be immediately destroyed.

B. The mechanic inspector will conduct a review of the documents for the vehicle ensuring that all documents are in agreement.

1. Certificate of registration contains information which must be verified with the corresponding information on the vehicle. A photocopy or original registration is acceptable. In lieu of a registration certificate, a vehicle may be inspected with a valid temporary license plate. The valid temporary registration is normally taped to the back of the temporary license plate.

2. Vehicle Identification Number (VIN). The VIN must agree with Certificate of Registration and the insurance document. It must match the VIN displayed on the vehicle.

3. License Plate. The registration indicates a license plate number and expiration date of the plate. This information must correspond with the information displayed on the vehicle. The license plate cannot be expired. An out-of-state vehicle may be inspected, as long as it meets the criteria.

a. Vehicles which display apportioned license plates for trucks which travel out of Louisiana are issued a Louisiana apportioned cab card in lieu of a registration. The cab card will indicate an expiration and a grace period.

b. A temporary registration authorization indicating an apportioned plate has been applied for is also acceptable in lieu of a registration. When this condition exists, no license plate is present. The temporary registration allows the vehicle to be used until the apportioned plate and cab card are issued.

c. Vehicles which display either a dealer plate or a temporary cardboard plate with green lettering on a white background are exempt from presenting a registration certificate. The driver must provide proof of fleet liability insurance coverage. The insurance must be in the name of the dealership which carries the vehicle in its inventory.

d. Drivers of vehicles which display a valid 60 day temporary marker must also present a bona fide bill of sale. The bill of sale must indicate the vehicle was purchased within 60 days from the date the vehicle is presented for inspection.

e. All vehicles which display a public license plate are exempt from presenting a registration certificate and proof of insurance. City, parish or state-owned vehicles, if licensed with Louisiana license plates, are required to be inspected and must meet the same requirements of any other vehicle of that same size and weight.

4. Operator license must be valid and in the immediate possession of the vehicle operator. It must be presented to the mechanic inspector, and the license number must be taken from the driver's license and recorded in the appropriate block on the log report or DEQ computer system.

a. A valid out-of-state driver's license is acceptable. The state in which it was issued must be noted on the log report.

b. A temporary driving permit issued in connection with a traffic violation when the operator's license is held may be accepted until the permit expires on the court date noted.

c. When inspecting motorcycles, the operator's license must have a motorcycle endorsement.

d. Operators of school buses and commercial motor vehicles must possess the appropriate type commercial driver's license.

5. Proof of current liability insurance must be shown to the mechanic inspector. Electronic proof of insurance will be accepted. The vehicle operator must also sign the log report indicating the vehicle is covered by liability insurance. (Note: Government vehicles are exempt from furnishing proof of insurance.) One of the following must be presented as proof of insurance. Although a trailer is not required to have liability insurance, the inspector must verify that the towing unit complies with one of the below requirements.

a. A current certificate of insurance, motor vehicle liability insurance policy (or duplicate of the original) or a binder for the same is acceptable. A vehicle's policy identification card or photocopy of the same may also be accepted. These documents shall designate the name of the insurance company affording coverage, the policy number, the effective dates of coverage (both the beginning and ending dates are required) and a description of the vehicle covered including the VIN. A binder must be an official accord binder form and can be handwritten.

b. A copy of a motor vehicle liability bond. This document may or may not describe the vehicle covered.

c. A certificate from the state treasurer indicating a deposit was made to the state. It will not have a description of the vehicle, but the vehicle must be registered under the same name as noted on the certificate.

d. A certificate of self-insurance issued by the Louisiana Department of Public Safety and Corrections. It is not required to describe the vehicle covered.

6. License Plate Mounting and Condition: In addition to being valid, the license plate will be inspected for the following:

a. must be secured to their mounting brackets;

b. must be clean, clearly visible and readable for a distance of 50 feet to the rear of the vehicle. Plates shall not be obscured or damaged so that the numbers cannot be identified;

c. must be mounted in the rear;

d. truck-trailer, emergency fire fighting equipment, dump-body trucks, trucks over 6,000 pounds and forestry product licensed vehicles may display the plate on either the front or rear of the vehicle.

C. All vehicles presented for inspection will be inspected for all of the following items: vehicle registration, vehicle license plate, driver's license and proof of liability insurance.

D. Every motor vehicle, trailer, semi-trailer and pole trailer registered in this state shall bear a valid safety inspection certificate issued in the state of Louisiana except as provided in R.S. 32:1311.

E. The director may authorize the acceptance of out-of-state inspection certificates when the state's inspection laws are similar to those stated herein. The director may also extend the time within which a certificate shall be obtained by the resident owner of a vehicle which was temporarily out of state during the time an inspection was required. However, once the vehicle is returned to Louisiana, a valid Louisiana inspection certificate must be obtained immediately.

F. State mechanic inspectors must check registrations prior to inspecting vehicles. Any vehicle registered in the municipalities of New Orleans, Kenner or Westwego must be inspected in those municipalities. In addition, inspectors must refer to the four-digit domicile code on the registration. Effective January 2000, any vehicle registered with a domicile code beginning with 03 (Ascension Parish), 17 (East Baton Rouge Parish), 24 (Iberville Parish), 32 (Livingston Parish), or 61 (West Baton Rouge Parish), and that are subject to the Inspection and Maintenance (I/M)

Program as provided in R.S. 32:1306(B)(3) and LAC 55:III.817 must be inspected within that five-parish area.

G. When a vehicle is presented for inspection, the mechanic inspector will collect the inspection fee and request that the driver present his operator's license, vehicle registration certificate and proof of liability insurance for the vehicle being inspected.

H. The vehicle registration must indicate an address other than in Kenner, Westwego or New Orleans. Residents of these areas are required to comply with the municipal ordinances of periodic inspections of the area in which they reside.

Exception: In hardship cases approved by the department, vehicles from these areas with an expired inspection certificate may be inspected at state inspection stations which will be valid until the return of the vehicle to these municipal areas.

I. The mechanic inspector shall verify whether or not he is qualified to inspect and the station is approved for the vehicle type being inspected, such as a passenger vehicle, commercial vehicle, school bus, etc.

AUTHORITY NOTE: Promulgated in accordance with R.S. 32:1304-1310.

HISTORICAL NOTE: Promulgated by the Department of Public Safety and Corrections, Office of State Police, Safety Enforcement Section, LR 25:2427 (December 1999), amended by the Department of Public Safety and Corrections, Office of State Police, LR 38:2553 (October 2012), LR 42:435 (March 2016).

§813. Required Equipment

A. The below items in Subsections B-FF of this Section shall be inspected by the mechanic inspector when an inspection certificate or a rejection is given to the vehicle being presented for an inspection. Inspected items must be in proper condition and adjustment such that the item does not pose an unsafe condition as to endanger any person or property.

B. Speedometer/Odometer

1. The speedometer and odometer must be operational.

2. The speedometer shall indicate miles per hour (mph) traveling.

3. The actual mileage must be recorded on the log report.

C. Horn

1. The horn shall be securely fastened.

2. The horn shall be an original type horn or an equivalent.

3. The horn shall be functional and audible for a distance of 200 feet.

4. An auxiliary horn must be wired to a separate switch.

D. Brakes

1. Every vehicle required to be equipped with brakes must be tested by conducting a braking test on the approved brake test area. The mechanic inspector shall take physical control of the vehicle presented for inspection to determine if the brakes are operating correctly, except motorcycles.

2. The test for stopping distance shall be made on a substantially level, smooth, hard surface that is free from loose material and is at least 150 feet in length by 8 feet wide. The vehicle shall not pull to the right or the left causing the vehicle to excessively alter its direction of travel.

3. A platform brake tester may be used instead of performing the braking test. Before attempting to inspect a vehicle's brakes with a platform brake tester, the mechanic inspector shall be trained on and have experience in the use of the machine. The machine shall have adequate capacity and shall be calibrated and certified yearly. The mechanic inspector shall follow all tester manufacturers' directions.

4. Classifications for Brake Application

a. Single unit vehicles with a manufacturer's gross vehicle weight rating of less than 10,000 pounds shall have a braking distance of 30 feet.

b. Motorcycles and motor-driven cycles shall have a braking distance of 30 feet.

c. Single unit vehicles with a manufacturer's gross weight rating of 10,000 pounds or more shall have a braking distance of 40 feet.

d. Buses, regardless of the number of axles, not having a manufacturer's gross weight rating shall have a braking distance of 40 feet.

e. All combinations of vehicles in drive away, tow-away operations shall have a braking distance of 40 feet.

f. All other vehicles and combinations with a GVWR of 10,000 or more pounds shall have a braking distance of 50 feet. This includes car and trucks towing a trailer over 3,000 lbs and under 10,000 lbs.

E. Brake Requirement

1. Any vehicle registered as a farm trailer, farm semi-trailer, rubber-tired farm wagon, drawn rubber-tired farm equipment or implements of husbandry manufactured or assembled prior to January 1, 1973, and operated or moved only incidentally on the highways of this state, shall be exempt from brake requirements provided that:

a. the gross weight does not exceed 10,000 pounds;

b. the speed does not exceed 30 miles per hour;

c. fertilizer distributors or spreaders are exempt from brake requirements. Commercially owned anhydrous ammonia nurse tank trailers used for the transportation and storage of fertilizer are exempt from the braking requirements.

2. Every registered vehicle when presented for inspection shall be equipped with brakes in accordance with the requirements herein stated.

a. Every motor vehicle, other than motorcycles or motor driven cycles, shall be equipped with brakes adequate to control movement of and to stop and hold movement of such vehicle. Two separate means of applying brakes are required, each of which shall effectively apply brakes to at least two wheels.

b. Every motorcycle and every motor driven cycle manufactured with two wheels shall be required to be equipped with brakes on both wheels.

c. Every trailer or semi-trailer exceeding 3,000 pounds gross weight shall be equipped with brakes adequate to control the movement of and to stop and hold such vehicle.

3. The following exceptions exist.

a. Trailers and semi-trailers manufactured or assembled prior to January 1, 1963, need only be equipped with brakes on a single axle provided the combination of vehicles, consisting of the towing vehicle and its total load, is capable of complying with the performance requirements.

b. Farm trailers and semi-trailers manufactured or assembled prior to January 1, 1973, need not be equipped with brakes. Every farm trailer and farm semi-trailer manufactured or assembled on or after January 1, 1973, and having a gross weight exceeding 3,000 pounds shall be equipped with brakes in accordance with the requirements set forth above.

c. Vehicles carrying forest products in their natural state shall not be required to have a brake on the drag axle if the wheels of the drag axle touch the ground only when the vehicle is loaded. However, this provision does not apply to trailers or trucks with more than two axles.

F. Parking Brakes

1. The parking brake will be inspected for the proper operation of the alternative braking system. The parking brake shall operate as originally equipped. The brake must be inspected for proper setting and release functions.

G. Lighting System

1. All exterior required bulbs or sealed beams must light when activated. All lamps must be of an approved type as stated in R.S. 32:330.

2. Auxiliary lighting equipment must not be placed on, in or in front of any lamp nor will auxiliary lighting interfere with the necessary visibility width of any lamp.

3. All lamp assemblies must be properly fastened.

4. No rear lamp is allowed with a broken, missing or defective lens which allows white light to be visible to the rear of the vehicle.

5. The use of tape on the surface of the rear lens or the use of any shield that covers any portion of the light will not be allowed unless originally factory equipped.

6. Any after market auxiliary lamp installed on a vehicle that is designed to emit white light or any auxiliary lamp mounted facing forward must be covered when used on public streets and highways. If auxiliary lamps are not properly covered, the inspector shall reject the vehicle.

7. All motor vehicles, except motorcycles, motor scooters and motor bikes shall be equipped with at least two operable headlamps, emitting white light only. These headlamps may be the multiple beam type or the single beam type. The type headlamp with which the vehicle is equipped will determine what requirements must be met.

8. Motor vehicles must have at least two headlamps, but not more than four headlamps, half mounted on each side on the front of the vehicle.

9. The mounted height of headlamps, measured from the center of the lamp to the level ground, will not be more than 54 inches nor less than 24 inches.

10. All vehicles must be equipped with an operable dimmer switch and beam indicator (high or low beam designation).

11. Headlamp concealment devices must remain fully open when the headlamp is illuminated. The concealment device must be opened automatically or manually without the use of any tools.

H. Parking Lamps on the front of the vehicle. When actuated, the front parking lamps must display either white or amber light. These lamps must operate as originally equipped.

I. Turn Indicator Lamps, Front and Rear

1. Any vehicle manufactured or assembled after December 31, 1962, must be equipped with lamps which indicate the direction of a turn displaying the signal to both the front and rear of the vehicle.

2. Front Turn Indicator Lamps. Both front turn indicator lamps must be mounted on the same level and display an amber light, except those vehicles manufactured or assembled prior to January 1, 1969. Those vehicles may emit either a white or amber colored light.

3. Rear Turn Indicator Lamps. Both rear turn indicator lamps must be mounted on the same level with one on each side of the vehicle. The lamps may emit either red or amber color light only. The lens covering the lamp may not be cracked, broken or missing causing white light to be emitted to the rear of the vehicle. The lens must be of an original type lens.

4. The signal cancellation must operate as originally equipped and cancel the signal when the turning maneuver is completed, except for truck-tractors, motorcycles or motor driven cycles.

J. Tail Lamps

1. Tail lamps must be covered with an original type lens. It cannot be cracked, broken or missing any of the lens which would emit white light to the rear of the vehicle.

2. Vehicles manufactured or assembled after December 31, 1962, must be equipped with at least two tail lamps.

3. The tail lamp must emit red light only.

4. The maximum height of tail lights is 72 inches and the minimum height allowed is 15 inches.

K. Stop Lamps

1. Vehicles manufactured or assembled after December 31, 1962, are required to have two operational stop lamps with the exception of motorcycles, motor driven cycles or truck tractors, which must have at least one.

2. The stop lamps must emit red light only visible at least 300 feet to the rear of the vehicle.

3. The stop lamps must operate as originally equipped.

4. The lens covering the stop lamp must be of an original type not broken, cracked or missing any portion which allows white light to be emitted to the rear of the vehicle.

L. High Mount Brake Lamp

1. All passenger vehicles manufactured September 1, 1985, and thereafter must be equipped with a third stop lamp. This lamp is to be mounted in the line of sight near the rear window with at least 4 1/2 inches of exposed red area on the lens. Light duty trucks with the model year 1995 and later are required to have high mount lamps.

2. The high mount brake lamp must be present and operate as originally equipped.

3. The vehicle shall be rejected if the high mount brake lamp is obscured by any add on item such as ladder racks, luggage racks, etc. Light duty trucks that are equipped with high mount brake lamps and have had a camper top installed must have a similar high mount brake lamp installed on the camper top in a corresponding position in the rear. If the vehicle comes equipped with a high mount brake lamp, it cannot be obscured by any after market item unless it is replaced with a comparable lamp as originally equipped and visible from the rear of the vehicle.

4. No tint shall obscure the high mount brake light.

M. Back-Up Lamps

1. Vehicles manufactured or assembled after January 1, 1969, must be equipped with no more than two back-up lamps.

2. The back-up lamp must emit a white light only.

3. The back-up lamps must be lighted only when the vehicle is in reverse gear and must not light when the vehicle is in any other gear.

N. License Plate Lamp

1. The license plate lamp must illuminate the license plate making it visible for 50 feet to the rear.

2. The lamp is to be lighted with white light only when headlamps or auxiliary driving lamps are lighted. The use of neon lights or the use of any other lights which obscure the license plate is prohibited.

O. Outside/Inside Rearview Mirrors

1. From the driver's seated position, visually inspect the left outside rearview mirror and the interior mirror for clear and reasonably unobstructed view 200 feet to the rear.

2. The mirrors should not be cracked, pitted or clouded to the extent that the driver's vision would be obscured. Inspect mirrors for correct location and stable mounting.

3. Mirrors must maintain set adjustment so that the rear vision is not impaired.

4. All vehicles manufactured after December 31, 1972, must be equipped at the factory with a left-hand, outside rearview mirror. This includes motorcycles and motor-driven cycles. If two outside mirrors are utilized, no inside mirror is required. If equipped with right outside mirror, it must comply with Paragraph 2 of this Subsection.

P. Windshield Wipers

1. All vehicles manufactured after December 31, 1972, must be equipped with a wiper system capable of operating at two or more speeds. Two wipers are required if the vehicle was originally equipped with such. All motor vehicles equipped with windshields, except motorcycles and motor driven cycles, are required to have windshield wipers.

2. Windshield wipers must operate as originally equipped to operate. If vacuum operated, the engine must be idling and the control must be turned on to the maximum setting.

3. Windshield wipers shall not smear or severely streak the windshield.

4. Proper contact of the blades with the windshield is required. Inspect by raising the arm away from the windshield and then release it. The arm should return to the original position or should urge the wiper blade to contact the windshield firmly.

5. The condition of the blades and metal parts must be checked.

6. Metal parts and blades shall not be missing or damaged. Blades shall not show signs of physical breakdown of rubber wiping element. Rubber blades shall not be damaged, torn or hardened to the point that they do not clear the windshield.

7. The windshield wiper control shall be within reach of the driver.

Q. Windshield Washers

1. The windshield washing system upon a vehicle that is not more than six years old from the date of manufacture or assembly shall be maintained in good working order.

R. Windshields

1. Every passenger vehicle, other than a motorcycle, shall be equipped with an adequate windshield.

2. For inspection purposes, the windshield is composed of three areas as follows.

a. Acute Area. The acute area is directly in the driver's line of vision in the center of the driver's critical area. It is 8 1/2" x 11", the size of a standard piece of paper, held horizontally on the windshield. In this area no cracks are allowed. No more than two stars, nicks, chips, bulls-eyes or half-moons in excess of 1/2 inch will be allowed.

b. Critical Area. The critical area is the area other than the acute area which is cleaned by the normal sweep of the windshield wiper blades on the driver's side only. In this area, any star larger than 2 inches in diameter; two or more stars larger than 1 1/2 inches in diameter or one or more cracks which extend more than 8 inches in length will not be allowed.

c. Non-Critical Area. This area consists of all other windshield area other than the acute or critical area. This area cannot have one or more cracks which extend more than 8 inches, one or more cracks which extend from top to bottom, one or more cracks which extend from right to left or one or more cracks which extend all the way across the windshield.

3. A windshield can be rejected at any time the condition creates a safety hazard. If a windshield is cracked in such a way as to jeopardize the integrity of the windshield, the vehicle is to be rejected.

S. Windows and Glass Sunscreening and Glass Coating

1. Windshields are allowed to have sunscreen extend down from the topmost portion of the windshield no more than 5 inches. The sunscreen shall be transparent and not red or amber in color. The windshield limitation for a vehicle that has a sunscreen certificate is 6 inches from the topmost portion of the windshield.

2. Vehicles being presented for inspection that do not have a valid window tint medical exemption affidavit or a security exemption form issued by the department shall be inspected as follows.

a. Windshield. As stated above, sunscreen may not extend more than 5 inches from the top of the windshield and may not be red or amber in color.

b. Front side windows must have at least 40 percent light transmission.

c. Side windows behind driver must have at least 25 percent light transmission.

d. Rearmost glass must have at least 12 percent light transmission.

e. Label. There must be a label affixed to the lower right corner of the driver’s side window. It must not exceed 1 1/2 inches square in size. It must be installed between the glass and the sunscreen material and must contain the name and city of the installer.

3. Light transmission will be checked using only an approved tint meter and following manufacturer’s directions.

4. Sunscreen shall not have a luminous reflectance of more than 20 percent.

5. No tint material may be affixed to the front windshield or the front side windows if the material alters the color of the light transmission. No tint other than smoke shall be allowed.

a. No vehicle wraps can be placed on any part of the vehicles glass.

6. Exceptions to the sunscreen rule:

a. sunscreen regulations do not apply to windows behind the driver of trucks, buses, trailers, motor homes, SUV’s, multi-purpose passenger vehicles and all windows of vehicles used for law enforcement purposes;

b. vehicles with valid window tint medical exemption affidavit or a security exemption form issued by the department.

7. Window Tint Medical Exemption Affidavit

a. A person with a medical condition which makes that individual sensitive to sun exposure may obtain a waiver form provided by the department. The waiver must be completed by a licensed physician and must be signed by a department officer. This waiver exempts the vehicle identified on the form from all restrictions except windshields as provided in R.S. 32:361.1.

b. The medical exemption affidavit shall:

i. be valid for a period of not more than 3 years, except for the following provisions;

ii. be valid only for vehicles registered in this state where the registered owner, spouse or immediate family member has an approved affidavit that shall be kept in the motor vehicle at all times;

iii. not be applied for, or issued to, persons convicted of crimes of violence as defined in R.S. 14:1(13) or criminal offenses involving controlled dangerous substances as defined in RS 40:961 et seq.

iv. be returned to applicant by an officer, if approved;

v. be non-transferable.

vi. be valid for the duration of ownership of a vehicle whose owner is age 60 years or older.

(a). The registered owner of the vehicle is 60 years and older at the time of application for a Medical Exemption Affidavit, or the individual becomes 60 years old while in possession of a valid Medical Exemption Affidavit, then the affidavit will be valid for the duration of that individual’s ownership of the vehicle as provided in R.S. 32:361.2(A)(3)(c) unless deemed otherwise by the department.

c. A red medical exemption certificate will be issued to each vehicle that has been approved for a medical Exemption affidavit. The certificate will be placed above the motor vehicle inspection certificate by an officer of the department. The certificate number will correspond to the certificate number on the medical exemption affidavit.

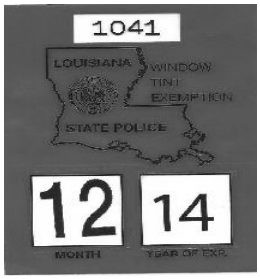

8. Window Tint Security Affidavit

a. The following exclusive list of persons, or entities, shall be eligible for a security exemption from the provisions of R.S. 32:361.1:

i. private investigators;

ii. bail enforcement agents;

iii. railroad police officers;

iv. Louisiana peace officers, POST-certified and sworn;

v. elected or appointed public officials.

b. The department will review and make a final decision on any other individual, business, company,, corporation or agency who submits a security exemption affidavit requesting added concealment of persons or property from public view.

c. Window Tint Security Exemption Criteria

i. Vehicle must be:

(a). properly licensed, insured and registered, all in Louisiana; and

(b). owned or leased by an applicant.

d. Security Exemption Affidavit

i. An individual seeking exemption to window tint restrictions can obtain a security exemption affidavit form at the department headquarters, any motor vehicle field office or via the world wide web by accessing www.lsp.org.

ii. The security exemption affidavit must be complete, sworn and subscribed in the presence of a notary public. The security exemption affidavit must include:

(a). applicant's name;

(b). address, city, state and zip code;

(c). vehicle description (year, make, model);

(d). vehicle identification number (VIN);

(e). vehicle license plate number;

(f). need, reason or explanation for exemption; and

(g). signature of applicant.

e. Security Exemption Process

i. A completed Security Exemption Affidavit must be mailed to the Department Headquarters Office, P.O. Box 66614, Mail Slip 26, Baton Rouge, LA 70896-6614. Security exemption affidavits will be reviewed and subsequently approved or disapproved by the department.

ii. Approved security exemption affidavits will be returned to applicant.

iii. An applicant whose Security Exemption Affidavit is disapproved will receive written notification of that decision by U.S. Mail. The correspondence will outline the reason(s) for denial. An applicant may write a letter of rebuttal germane to the reason(s) for denial. Letters of rebuttal will be taken under advisement. Once a final determination of eligibility has been made, an applicant has no further recourse. The Department of Public Safety and Corrections may approve, disapprove, cancel or revoke exemptions for window tint restrictions as deemed appropriate.

T. Body and Sheet Metal. Exterior components of the body and sheet metal parts must not be damaged and/or dislocated so that they project from the vehicle and present a safety hazard to occupants, pedestrians or other vehicles.

U. Fenders

1. Fenders, covers or devices including splash aprons and mud flaps shall be required unless the body of the vehicle or attachments afford protection to effectively minimize the spray or splash of water, mud or loose material on the highway from the rear of the vehicle.

2. Tires shall not extend beyond fenders or attachments more than 1 inch to provide a safe condition.

3. All vehicles with an unladen weight of under 1,500 pounds and trucks or farm vehicles handling or hauling agricultural or forestry products are exempt from fender requirements.

4. Front and rear fenders that have been removed because of being hazardous or unserviceable must be replaced. If replacement of the front or rear fender removes a required lighting device, the lighting device must be re-installed or replaced.

V. Bumpers

1. Bumpers removed from vehicles originally equipped with bumpers will not be permitted. However, rear bumpers are not required on pickup trucks.

2. Rebuilt or modified bumpers must be made of material equivalent to the original bumpers and must be equal in strength.

3. Bumpers must be securely attached and not broken or protruding.

W. Doors. The vehicle's doors will be inspected as follows.

1. All doors must be present and operational with installed handles.

2. Doors must be secured in the closed position.

3. Doors must function as originally equipped by the factory.

4. Drivers side windows must properly function as designed. Laminated driver and passenger side windows cannot have cracks that obscure the drivers view.

X. Hood Latch. The hood must be securely held in a closed position by an original type latch.

Y. Floor Pan. No holes or rusted areas are permitted in the occupant compartment or trunk. Inspectors may require that the trunk of a vehicle be opened on vehicles possessing serious body rust throughout.

Z. Wheels and Tires

1. Conduct a visual check of the wheels and tires to detect any condition that would create a hazard or an unsafe condition.

2. All tires must be for highway use. Tires marked "Not for Highway Use", "Farm Use Only" or "For Racing Purposes Only" are not allowed.

3. Tires without tread wear indicators shall have 2/32 inch tread remaining when measured in any two adjacent major grooves at a minimum of three locations spaced approximately equal distance around the major tire groove.

4. Tires with tread wear indicators shall not allow the indicators to contact the road in any two adjacent major grooves at three locations spaced equally around the tire.

5. Cord shall not be exposed through the tread. Tread cuts, snags or sidewall cracks in excess of 1 inch in any direction deep enough to expose cords, are not allowed.

6. Tires shall not have visible bumps, bulges or knots indicating partial failure or ply separation of the tire structure.

7. Tires shall not be re-grooved or re-cut below the original groove depth except tires which have undertread rubber for this purpose and are identified as such.

8. Tires on the same axle shall be of the same type construction.

9. Wheels shall not be bent, loose, cracked or damaged as to affect safe operation.

10. Rims or wheel flanges shall not be defective.

11. Wheels should be secure. Only one missing or defective bolt, nut or lug is allowed except on a four-hole pattern wheel. On a four hole pattern wheel no missing or defective lugs are allowed.

12. Vehicles equipped with oversized wheels must be able to make a turn of not more than a 45 degree angle without rubbing on the frame.

AA. Steering Mechanism

1. An original equipment type steering wheel is required.

a. The steering wheel shall be of the same diameter as originally equipped. Any modification that may affect the proper steering of the vehicle is prohibited.

b. Chain-type steering wheels shall not be allowed.

2. Excessive play, tightness, binding or jamming shall not be allowed.

a. With the front wheels in a straight-ahead position, check steering for free play. The engine must be running to check the free play in the power steering. More than 2 inches of free play for power-assisted steering and more than 3 inches of free play for manual steering will not be permitted. This shall be conducted during the braking test.

3. Excessively worn or broken parts in the steering components, any leakage of the power unit or excessive looseness of the power system fan belt shall not be permitted.

4. Modification of the front end and steering mechanism in any manner shall not be permitted.

BB. Suspension and Shock Absorbers

1. The vehicle must have operational shock absorbers and springs.

2. The vehicle must have at least 3 inches of suspension travel.

3. The vehicle must have at least 4 inches of ground clearance measured from the frame or the lowest part of the vehicle, with the vehicle on a level surface.

CC. Seats and Seat Belts

1. Front seats shall be securely anchored to the floor pan. Missing anchor bolts are not permitted. The seat adjusting mechanism shall not slip out of the set position.

2. Seat belts shall operate and adjust as originally intended. Seat belt buckles shall operate properly.

3. Webbing shall not be split, frayed or torn.

4. Seat belts shall be securely mounted. Anchorages shall be secure.

5. Passenger cars, vans or trucks with a gross weight of 10,000 pounds or less, and manufactured after January 1, 1981, must have working seatbelts as originally equipped.

DD. Exhaust System. The exhaust system includes the piping leading from the flange of the exhaust manifold to, and including, the mufflers, resonators, tail piping and emission control device. Visually inspect the exhaust system for rusted or corroded surfaces.

1. The vehicle must have a muffler.

2. No loose or leaking joints in the exhaust system are allowed. Also, no holes, leaking seams, loose interior baffles or patches on the muffler are allowed.

3. The tail pipe end cannot be pinched.

4. Elements of the system must be fastened securely, including missing connections or missing or broken hangers.

5. A muffler cannot have a cut-out bypass, or similar device which allows fumes to escape.

6. The muffler cannot emit excessive smoke, fumes, or noise.

7. The tail pipe shall extend past the passenger compartment.

EE. The windshield, rear glass and all windows must be present with no obstructions and in working order as originally equipped except as provided in Paragraphs S.6, S.7, or S.8 of this Section.

FF. Side Marker Lights and Reflectors. In addition to other equipment required in this Chapter, the following vehicles shall be equipped as herein stated under the conditions stated in R.S. 32:301.

GG. Buses, trucks, motor homes, and motor vehicles with mounted truck camper, 80 or more inches in width shall meet equipment requirements as follows:

1. on the front: two clearance lamps, one at each side, and all such vehicles manufactured or assembled after December 31, 1972 shall have three identification lamps meeting the specification of Subsection F of this Section;

2. on the rear: two clearance lamps, one at each side, and all such vehicles assembled or manufactured after December 31, 1972 shall have three identification lamps meeting the specifications of Subsection F of this Section;

3. on each side: two side marker lamps and two reflectors one of each at or near the rear and at or near the front.

HH. Trailers and semi-trailers 80 inches or more in width, except boat trailers, shall meet equipment requirements as follows:

1. on the front: two clearance lamps, one at each side;

2. on the rear: two clearance lamps, one at each side, and all such vehicles manufactured or assembled after December 31, 1972, three identification lamps meeting the specifications of Subsection F of this Section;

3. on each side: two side marker lamps and two reflectors one of each at or near the front and at or near the rear.

II. Truck tractors shall meet equipment requirements as follows:

1. on the front: two cab clearance lamps, one at each side, and on vehicles manufactured or assembled after December 31, 1972, three identification lamps meeting the specifications of Subsection F of this Section;

2. on each side: two amber side marker lamps and two amber reflectors, one of each at or near the front and at or near the rear.

JJ. Trailers, semi-trailers and pole trailers 30 feet or more in length shall have one amber side marker lamp and one amber reflector, centrally located with respect to the length of the trailer, on each side. Pole trailers shall also have on each side, at the rearmost support for the load, one combination marker lamp showing amber to the front and red to the rear and side, mounted to indicate maximum width of the pole trailer.

KK. Boat trailers 80 inches or more in width shall meet equipment requirements as follows:

1. on each side: two side marker lamps and two reflectors, one of each at or near the front and at or near the rear, and at or near the midpoint, one clearance lamp performing the function of both a front and rear clearance lamp;

2. on the rear of boat trailers manufactured or assembled after December 31, 1972, shall be three identification lamps meeting the specifications of Subsection F of this Section.

AUTHORITY NOTE: Promulgated in accordance with R.S. 32:1304-1310.

HISTORICAL NOTE: Promulgated by the Department of Public Safety and Corrections, Office of State Police, Safety Enforcement Section, LR 25:2428 (December 1999), amended LR 28:345 (February 2002), amended by the Department of Public Safety and Corrections, Office of State Police, LR 36:1789 (August 2010), LR 38:2553 (October 2012), LR 42:435 (March 2016), LR 44:1634 (September 2018).

§815. Miscellaneous Inspection Procedures

A. Trailers (must comply with requirements of LAC 55:III.811 and 813 where applicable)

1. Every trailer and semi-trailer with a loaded gross weight capacity of up to 6,000 pounds shall be equipped with safety chains. The safety chains shall be securely attached to the towing vehicle when the trailer or semi-trailer is in motion, and shall be of sufficient strength to hold the trailer behind the towing vehicle in case the connection between the two vehicles detaches.

2. Trailers shall be inspected for fenders, lights and brakes, and tires where applicable.

3. Trailers shall be inspected at the hitch connection and the inspector must verify that the ball and hitch are of the same dimension.

4. Trailers must have working emergency brake-away device.

5. Exemptions. Single axle two-wheel trailers, tandem axle trailers, and all boat trailers are exempt from the MVI requirements (unless these trailers are used in commerce and

are subject to 49 CFR 396.17-23 of the Federal Motor Carrier Safety Administration regulations).

B. Antique Cars. Motor vehicles which are 25 years old or older and which are used primarily for exhibition in shows, parades, tours and other special uses and not for general transportation, and which are registered and licensed as antique as provided in R.S. 32:707(L) shall be exempt from the inspection requirements of this Chapter.

C. Motorcycles. In addition to other items already stated, motorcycle handlebars will also be inspected as follows.

1. They must be constructed of tubing comparable to or exceeding the thickness of the original equipment.

2. No cracks, deformation or excessive flexure is allowed.

3. Handlebars shall not extend past the operator's shoulder height when the operator is sitting astride the seat and the operator's hands are on the handlebar grips.

4. Handlebars shall be properly aligned.

AUTHORITY NOTE: Promulgated in accordance with R.S. 32:1304-1310.

HISTORICAL NOTE: Promulgated by the Department of Public Safety and Corrections, Office of State Police, Safety Enforcement Section, LR 25:2433 (December 1999), amended by the Department of Public Safety and Corrections, Office of State Police, LR 42:438 (March 2016), LR 44:1634 (September 2018).

Subchapter C. Vehicle Emission Inspection and Maintenance Program

§817. General Information

A. Emission Control System Inspections. This Section describes the general procedures to be used by certified inspectors when conducting anti-tampering and other emission control system inspections on 1980 and newer model year gasoline-fueled passenger cars and gasoline-fueled light- and heavy-duty trucks (10,000 pounds gvwr or less) registered and/or operated in the state of Louisiana. The purpose of the vehicle anti-tampering inspection is to detect physical damage to, or disablement or removal of, emission control system components, and to repair or replace defective or missing system components. The purpose of the evaporative system pressure test is to ensure that the entire evaporative emission system is fully pressurized and functional. These emission control system inspections are designed to reduce both tailpipe and evaporative pollutant emissions from in-use vehicles operated in Louisiana.

B. General Inspection Procedures

1. The vehicle anti-tampering inspection is designed to identify any evidence of tampering or obvious need for repair or replacement of a vehicle's emissions control system components. Vehicles that initially fail the anti-tampering inspection are required to be repaired and re-inspected in order to comply with the inspection guidelines. The anti-tampering inspections also serve to discourage illegal tampering with the vehicle's emission control system, thereby resulting in additional reductions of vehicular emissions in Louisiana.

2. No attempt shall be made by the certified inspector to remove any engine components to perform the anti-tampering inspection. In instances where certain components are not visible, it will be assumed that the component is properly connected and operative. However, this assumes that a reasonable attempt was made by the certified inspector to identify and visually examine the component.

3. During the inspection, the certified inspector will either pass or fail the vehicle based on the criteria described herein. The vehicle will be rejected if any of the inspected parameters are found disconnected or tampered with. The certified inspector will then place a rejection certificate on the vehicle and inform the vehicle operator why the vehicle failed inspection and what corrective measures are required for the vehicle to pass inspection.

4. For the purpose of the vehicle anti-tampering and inspection and maintenance program, passenger car means every motor vehicle designed for carrying 10 passengers or less and used for the transportation of people.

5. For the purpose of the vehicle anti-tampering and inspection and maintenance program, light-duty truck and heavy-duty truck means a gasoline-fueled motor vehicle with a gross vehicle weight rating of 10,000 pounds or less. Light- and heavy-duty trucks shall include, but not be limited to, minivans, sport utility vehicles, pick-up trucks, panel delivery trucks, and carry-all trucks.

6. Proof of repair or replacement of emission control components shall be provided by the vehicle owner at the time the vehicle is re-inspected. This proof shall be in the form of a dated repair receipt or a sales invoice and must be presented to the inspection station when the vehicle is re-inspected.

C. Manufacturer's Emission Control Label

1. The manufacturer's emission control label located under the hood consists of a schematic diagram of the original emission control components installed on the vehicle. The certified inspector should refer to this label diagram when attempting to locate applicable emission control components. On vehicles equipped with a catalytic unit, a decal is required by federal regulation to have the word catalyst in legible letters.

D. Manufacturer's Information Plate. The gross vehicle weight rating (gvwr) of a vehicle is stamped on the federal safety sticker located inside the left door of the vehicle.

AUTHORITY NOTE: Promulgated in accordance with R.S. 32:1304-1310.

HISTORICAL NOTE: Promulgated by the Department of Public Safety and Corrections, Office of State Police, Safety Enforcement Section, LR 25:2433 (December 1999), amended by the Department of Public Safety and Corrections, Office of State Police, LR 42:438 (March 2016).

§819. Anti-Tampering and Inspection and Maintenance Parameters

A. The statewide vehicle anti-tampering program will include a visual inspection of the following emission control system components on all 1980 and newer model year gasoline-fueled passenger cars and gasoline-fueled light- and heavy-duty trucks (10,000 pounds gvwr or less) registered and/or operated in Louisiana:

1. catalytic converter system (catalyst);

2. air injection system (AIS including belts, hoses, and valves);

3. positive crankcase ventilation system (PCV system including hoses and valves);

4. evaporative emission control system (charcoal canister, hoses, wires, and control valves); and

5. exhaust gas recirculation system (EGR valve and hoses).

B. Effective January 1, 2000, and in addition to the anti-tampering parameter checks listed in Subsection A of this Section, a vehicle inspection and maintenance program consisting of a gas cap pressure test is required on all subject vehicles, 1980 and newer model year, gasoline-fueled passenger cars and gasoline-fueled trucks (10,000 pounds gvwr or less) registered within the five parish non-attainment area. The non-attainment area is comprised of Ascension, East Baton Rouge, Iberville, Livingston, and West Baton Rouge parishes.

C. Effective January 1, 2002, and in addition to the requirements outlined in Subsections A and B of this Section, the performance of Onboard Diagnostic (OBD II) system checks will be required on all 1996 and newer model year gasoline-fueled passenger cars and gasoline-fueled trucks (10,000 pound gvwr or less) registered in the five parish non-attainment area, except those model year vehicles exempted by the Louisiana Department of Environmental Quality pursuant to R.S. 30:2054(B)(8). These mandatory OBD II checks are to be performed in accordance with the federal Amendments to Vehicle Inspection Maintenance Program Requirements Incorporating the Onboard Diagnostic Check; Final Rule at 40 CFR Parts 51 and 85 as published in *Federal Register*, Thursday, April 5, 2001 (Volume 66, pages 18156-18179).

D. Subsections A, B, and C of this Section shall apply to those vehicles (belonging to the covered model years and vehicle classes) that are routinely operated in the five parish non-attainment area as part of a fleet, though the individual vehicles are not registered in any one of those five parishes.

AUTHORITY NOTE: Promulgated in accordance with R.S. 32:1304-1310.

HISTORICAL NOTE: Promulgated by the Department of Public Safety and Corrections, Office of State Police, Safety Enforcement Section, LR 25:2434 (December 1999), amended LR 27:2260 (December 2001), LR 28:345 (February 2002), LR 30:2493 (November 2004), amended by the Department of Public Safety and Corrections, Office of State Police, Transportation and Environmental Safety Section, LR 43:538 (March 2017).

Subchapter D. Inspection Procedures for School Buses

§821. General Information

A. These standards are adopted from the minimum standards for school buses in Louisiana as promulgated by authority of *Louisiana Revised Statute* 17:164 which reads: "The Louisiana State Board of Education is authorized, directed and empowered to establish and adopt regulations relating to the construction, design, equipment and operation of school buses used in transportation of students to and from school. The statute further states that: "…any school bus body, chassis or equipment that meets the latest revised minimum standards for school buses adopted and recommended by the National Conference [now Congress] on school Transportation…shall be deemed in compliance with any such regulations adopted by the Louisiana state board of education….". The National Congress on School Transportation publishes specifications for school buses, along with inspection procedures, in its publication *Specifications and Procedures*, which is available at ncstonline.org. This document is reviewed and revised every five years.

B. Definitions of School Bus Types

Type A—school bus is a conversion or bus constructed utilizing a cutaway front-section vehicle with a left side driver's door. This definition includes two classifications:

a. type A-1, with a gross vehicle weight rating (GVWR) of 14,500 pounds or less; and

b. type A-2, with a GVWR greater than 14,500 and less than or equal to 21,500 pounds.

Type B—school bus is constructed utilizing a stripped chassis. The entrance door is behind the front wheels. This definition includes two classifications:

a. type B-1, with a GVWR of 10,000 pounds or less; and

b. type B-2, with a GVWR greater than 10,000 pounds.

Type C—school bus is constructed utilizing a chassis with a hood and front fender assembly. The entrance door is behind the front wheels; also known as a conventional school bus. This type also includes cutaway truck chassis or truck chassis with cab with or without a left side door and a GVWR greater than 21,500 pounds.

Type D—school bus is constructed utilizing a stripped chassis. The entrance door is ahead of the front wheels; also known as rear or front engine transit style school buses.

C. Color

1. Any passenger-carrying vehicle, regardless of its class, with a capacity of more than seven passengers and used exclusively in the transportation of teachers and pupils to and from schools or their institution of learning under contract or other arrangement made by or with the

constituted and authorized school personnel shall be considered a school bus. The school bus must be painted national school bus glossy yellow (R.S. 17:161). [The color known as "national school bus yellow" (NSBY) is specified and described in the School Bus Manufacturers Technical Council publication SBMTC-008, National School Bus Yellow Color Standard.] The uppermost top section of the roof may be painted white to reduce heat inside of the bus and the body exterior trim may be painted glossy black.

2. The front and rear bumpers shall be black.

3. Wheels may be gray, yellow or black.

4. Every school bus sold or transferred to any use other than school activities shall be painted by the new owner a color other than national school bus chrome yellow, all lettering of school bus identification, and all semaphore arms and alternate flashing signal lights shall be removed therefrom (R.S. 17:162; R.S. 32:378).

D. All school buses presented for inspection must adhere to all safety requirements, where applicable, and must also conform to applicable Federal Motor Vehicle Safety standard (FMVSSs), Federal Motor Carrier Safety regulations, and LAC 28:CXIII, the Louisiana Department of Education Student Transportation Handbook, *Bulletin 119—Louisiana School Transportation*, Chapter 7, Vehicle Inspection and Maintenance. The bus must comply with the following items and devices in addition to all other requirements.

E. Before being approved to inspect school buses, official motor vehicle inspection stations must meet the following qualifications.

1. The station must have an area large enough to accommodate a bus. The inspection area will be subject to approval by the department.

2. Mechanic inspectors must possess a valid driver's license. The mechanic inspector must also meet the minimum experience qualifications.

3. The mechanic inspector must pass the general and commercial MVI classes and must be approved to inspect school buses by the department.

4. In addition stations and mechanic inspectors must meet all requirements in LAC 55:III.805.

AUTHORITY NOTE: Promulgated in accordance with R.S. 32:1304-1310.

HISTORICAL NOTE: Promulgated by the Department of Public Safety and Corrections, Office of State Police, Safety Enforcement Section, LR 25:2434 (December 1999), amended by the Department of Public Safety and Corrections, Office of State Police, LR 38:2557 (October 2012), LR 42:438 (March 2016), LR 44:1635 (September 2018).

§823. General Inspection Procedures for School Busses (must comply with requirements of LAC 55:III.811 where applicable)

A. Documents. Mechanic inspectors shall check the following:

1. registration. Parish owned buses are exempt from presenting the registration certificate and proof of insurance. However, the operator must sign the log report confirming liability insurance coverage;

2. license plate;

3. operator's license (must be appropriate type of CDL); and

4. proof of insurance.

B. Brakes. All school buses shall be equipped with a hydraulic brake system or an air brake system. Mechanics shall check for all of the following.

1. Hydraulic Brake System

a. The brakes must be able to stop the bus within 30 feet at a speed of 20 miles per hour with no children on board.

b. The master cylinder must be inspected.

2. Air brake systems must be inspected for:

a. at least two reservoirs;

b. a safety valve on the first reservoir;

c. an air gauge;

d. an audible low pressure indicator;

e. hoses, tubes or connections shall be inspected for crimps, abrasions or breaks exposing cord;

f. audible air leaks; and

g. air chamber;

h. if visible, check brake shoes and drums for excessive wear or damage;

i. the push rod travel must be measured (see motor carrier chart) in lieu of a braking test.

C. Fluid Leaks. Vehicle fluids include gasoline or diesel, transmission fluid, engine oil, bearing grease, water or radiator coolant, windshield washer fluid or water and power steering fluid. No fluid leaks of any kind are allowed.

D. Lighting Systems. The lighting system will be checked as follows.

1. Interior Lamps (including stepwell lamp on types A, B, C and D school buses). Interior lamps shall be used to provide adequate illumination of the interior compartment. The stepwell lamp shall be illuminated by an entrance door-operated switch, to illuminate only when headlamps and clearance lamps are on and the entrance door is open.

2. Identification Lamps. A school bus is required to have three amber identification lamps on the front and three red identification lamps on the rear of the bus. They should be mounted at the upper most center of the body of the bus spaced in a horizontal line not more than 12 inches apart.

3. Clearance Lamps. A school bus is required to have clearance lamps mounted as high as possible on the

permanent structure of the bus. The lights mounted on the front of the bus must be amber in color and those on the rear must be red. These lights must be mounted on each side of the bus and positioned in such a manner as to indicate the extreme width of the body of the bus.

4. Side Marker Lamps. School buses are required to have amber side marker lamps mounted on the front of the bus and red lamps on the rear. These must be on each side of the bus.

5. Reflectors. The school bus must be equipped with reflectors as follows.

a. Two red reflectors shall be installed on the rear of the bus.

b. Two reflex reflectors shall be installed on the side of the bus.

i. One must be mounted at or near the front of the bus and must be amber in color.

ii. One must be mounted at or near the rear of the bus and must be red in color. Buses 30 feet or longer in length require one additional amber reflex reflector on each side of the bus.

6. School Bus Alternately Flashing Lamps. A school bus shall have alternately flashing lamps mounted at the same horizontal level which identify the vehicle as a school bus. They also inform other vehicle operators that the bus is stopped or about to stop to take on or discharge students.

a. School buses are required to have four alternating flashing red signal lamps mounted at the same level and as high and as widely spaced as practical. Two lamps must be mounted on the front and two lamps must be mounted on the rear. All lamps must alternately flash.

b. All buses manufactured after July 7, 1977, must be equipped with four alternately flashing yellow lamps mounted on the same level as the alternately flashing red lamps, but closer to the vertical center line on the bus. These lamps must display two alternately flashing yellow lights to the front of the bus and two alternately flashing yellow lights to the rear of the bus. The alternately flashing yellow lights must not light when the alternately flashing red lights are activated (during a stop).

c. The alternately flashing lamps (both red and yellow) must function with a manually activated switch only. No brake operated switches are allowed.

d. The school bus must be equipped with an audible or visible means of indicating to the driver that the signaling system is activated.

E. Left Hand Stop Arm Lamps

1. All buses manufactured after July 7, 1977, must be equipped with two flashing red lights on each of the left hand stop arms with the light visible from both sides of the stop arms, and these lights shall be visible at 500 feet in normal sunlight [R.S. 32:318(B)(4)].

a. These lamps must activate when the stop arm is extended and the lamps must flash alternately.

2. Two stop signal arms shall be installed on types B, C and D school buses; one stop signal arm shall be installed on type A school buses. When two stop signal arms are installed on a school bus, the rearmost stop arm shall not contain any lettering, symbols or markings on the forward side.

3. The entire surface of both sides of the stop signal arm shall be of reflectorized material with type III reflector material that meets the minimum specific intensity requirements of 49 CFR 517.131. When two stop signal arms are installed on a bus, the forward side of the rearmost stop signal arm shall not be reflective.

F. Stop Lamps. If the bus was manufactured after December 31, 1962, two 7-inch stop lamps emitting red light only must be mounted on the rear of the bus as high as possible, but below the window line.

G. Turn Indicator Lamps

1. Buses are required to have electric turn signal lamps that indicate the direction of a turn.

2. If the bus was manufactured after August, 1970, it is required to have four 7-inch turn indicator lamps.

a. Two 7-inch amber turn signal lamps must be mounted toward the front of the bus on the same level and as high as practical, but not less than 3 feet above the ground.

b. Two lamps, either red or amber in color, to the rear must be mounted on the same level as the front turn indicator lamps.

3. Buses manufactured after August 1970, are required to have operational four-way hazard warning signals.

H. Fog Lamps. Fog lamps are permissible provided that the lamps are properly installed and operational.

I. Backing Lamp and Audible Backing Alarm

1. Backing Lamp. The bus body shall be equipped with two white rear backup lamps that are at least four inches in diameter, or, if a shape other than round, a minimum of 12 square inches of illuminated area and shall meet FMVSS No. 108. If backup lamps are placed on the same horizontal line as the brake lamps and turn signal lamps, they shall be to the inside.

2. Backing Alarm. Every new school bus ordered or purchased after August 15, 1993, and every used bus not in service as a school bus on that date, but put into service as a school bus thereafter, shall be equipped with an automatic back-up audible alarm which sounds on backing and which is capable of emitting sound audible under normal conditions from a distance of not less than 100 feet. The alarm shall also be capable of operating automatically when the vehicle is in neutral or a forward gear but rolls backward (R.S. 32:378).

J. Mirrors. School buses are required to have an interior mirror, exterior mirrors and one or more exterior cross-view mirrors.

1. Interior Mirror. Type A bus shall have a minimum of 6” x 16” mirror and type B, C and D buses shall have a minimum of 6” x 3” mirror.

2. Exterior mirror must have one or more left and one or more right hand mirrors with a minimum of 50 square inches of reflecting glass.

3. Exterior Cross View Mirror. Buses manufactured after July 1, 1979, shall have a mirror system which will provide a clear, unobstructed view of the area in front of the bus; the area immediately adjacent to the left and right front wheels and the entrance door.

K. Interior Doors

1. Service Door (front passenger pick up door). It may be controlled manually or by power. It must be controlled by the bus driver only.

a. The vertical closing edges of the service door must be equipped with a flexible material to protect passenger's fingers.

2. Emergency Exit Door

a. The passage way to the emergency door must not be restricted in any way to less than 12 inches in width.

b. There must not be steps to the emergency door when the door is in the closed position.

c. It must be equipped with a proper gasket around the door and the glass which furnishes a proper seal.

d. It must be equipped with an audible warning buzzer which notifies the driver's compartment that the door is open.

e. The emergency door mechanism shall function from the inside and outside.

f. The words "Emergency Exit" or "Emergency Door" shall be marked directly above the door on both the inside and outside in letters at least 2 inches high.

g. There must be no manual locking of any doors while the bus is in operation. No pad locks can be used on any door while the bus is in operation.

L. Bumpers and Crossing Control Arm

1. The words "School Bus" must be on the front and rear of the vehicle in plain, black letters at least 8 inches in height.

2. The stop arms shall be painted red with the word “Stop” in white letters.

3. Every school bus shall be equipped with a crossing control device actuated by the driver and operated in conjunction with the stop arm. The crossing control device shall pivot out from the right side of the front bumper to prevent persons from walking directly in front of the bus [R.S. 17:164.1(A)(1)].

M. School bus identification (signs):

1. the words “School Bus” must be on the front and rear of the vehicle in plain, black letters at least 8 inches in height.

2. bus identification number on the sides, rear and front;

3. district, company name or owner of the bus displayed at the beltline;

4. the location of the battery(ies) identified by the word battery or batteries on the battery compartment door in two-inch lettering;

5. “handicap” symbol, identifying the bus as equipped for or transporting student with disabilities; however, the symbol shall not be placed on the glass of the rear emergency exit;

6. the stop arms shall be painted red with the word Stop in white letters, or the stop arms may be covered by a manufactured decal with the same color combination.

N. Tires

1. At a minimum, the steering axle must have 4/32 inch tread.

2. No re-grooved or re-capped tires are allowed on the steering axle.

3. At a minimum, the rear axle must have 2/32 inch tread.

O. Mud Flaps. All school buses manufactured on or after July 1, 1979, shall be equipped with mud flaps on the rear of the vehicle.

P. Front and Rear Suspension and Steering. The front of the bus must be lifted and the following items checked:

1. wheel bearings for excessive looseness and play;

2. king pins and bushings for excessive looseness;

3. drive shaft and universal joints for excessive wear; and

4. ball joints for excessive wear.

Q. Windshield, Windows, and Glass

1. The left front driver's window must readily open and close.

2. No cracks, discoloration or scratches to the front, rear, right or left of the driver which would interfere with his vision are allowed.

3. No window may be broken or have any exposed sharp edges. No window may have any cracked or separated glass allowing one piece of glass to move independently of another.

4. The windshield, not including a 2 inch border at the top and a 1 inch border at each side of the windshield or each panel thereof, may not:

a. have any crack not over 1/4 inch wide, if not intersected by any other crack; or

b. have any damaged area which can be covered by a disc 3/4 of an inch in diameter, if not closer than 3 inches to any other such damaged area (Federal Motor Carrier Safety regulation, 393.60).

5. Side windows must open and close properly.

6. Windows must have exposed edge of glass banded.

7. Driver side windows and service doors shall not have window tint.

8. Each emergency exit window must be equipped with an alarm buzzer that alerts the bus driver to an unlatched or open window.

R. Stepwell and Floor Covering

1. The stepwell and the aisle on buses manufactured after July 1, 1966, must be covered with a rubber, non-skid, wear resistant, ribbed material.

2. All openings in the floor board, such as the gear shift lever and auxiliary brakes, shall be sealed.

3. The stepwell must not be rusted in any area and must have sufficient strength to support passengers.

4. The aisle must not be restricted in any way to less than 12 inches in width.

5. There must be no looseness in the stanchions, guard rails or grab rails.

S. Emergency Equipment. Any piece of emergency equipment may be mounted in an enclosed compartment, provided the compartment is labeled in not less than one-inch letters, identifying each piece of equipment contained therein. Emergency equipment shall consist of the following items.

1. First Aid Kit. The bus shall have a removable, moisture-proof and dust-proof first aid kit, securely mounted in an accessible place within the driver's compartment. The first aid kit must contain the supplies necessary to administer first aid in an emergency situation.

2. Fire Extinguisher. The bus will be equipped with at least one UL-approved pressurized ABC type of dry chemical fire extinguisher. It must have a gauge and at least a 5 pound capacity. It must be mounted in the manufacturer's bracket of an automotive type. It must be located in the driver's compartment in a clearly marked location or in full view of, and readily accessible to, the driver. Fire extinguishers must have a valid and up-to-date certification.

3. Warning Devices. Each school bus shall contain at least three retroreflective triangle road warning devices that meet the requirements of FMVSS No. 125, warning devices. They shall be mounted in an accessible place.

4. Body Fluid Cleanup Kit (Optional). Each school bus may have a removable and moisture-proof body fluid clean-up kit accessible to the driver. The kit shall be mounted and identified as a “body fluid clean-up kit.”

T. Defrosters. The school bus will be equipped with defrosters which shall be capable of keeping the windshield, driver's left window and glass entrance door clear of fog, frost and snow. In addition, buses manufactured on or after July 7, 1979, shall be equipped with an auxiliary fan at least 6 inches in diameter. The fan must be located in the center of the windshield to provide maximum effectiveness to the right side of the windshield and the service door.

U. Sun Shield. An interior adjustable, transparent sun shield, not less than 6 inches by 30 inches, supported by two brackets shall be installed so that it can be turned up when not in use.

V. Instrument Panel

1. The instrument panel must have a lamp which effectively illuminates all instruments and gauges.

2. The school bus must be equipped with an operational beam indicator to indicate the bright/dim setting on headlamps.

3. All wiring under the instrument panel must not be hanging. Wiring must be tucked under the panel.

W. Seat Belts, Seats, and Guard Rails

1. The driver's compartment must be equipped with an approved seat belt for the driver.

2. No exposed padding, springs or wires will be allowed on the seats or guard rails.

3. If a rip or tear is not more than 3 inches long, the seats may be taped. However, no more than three pieces of tape may be used per seat.

4. No overhead storage compartments or racks shall be permitted inside the bus.

X. Battery. The battery for the school bus must be secured with some type of tie-down device. Bungee cords and bailing wire are not allowed.

Y. Exhaust

1. Inspect the exhaust system for leaks, rusted areas, broken hanger, etc.

2. The end of the exhaust system may turn and exit at the rear, side edge of the bus or it may go past the rear bumper no more than 2 inches. In any case, the exhaust system must extend past the passenger compartment of the bus.

AUTHORITY NOTE: Promulgated in accordance with R.S. 32:1304-1310.

HISTORICAL NOTE: Promulgated by the Department of Public Safety and Corrections, Office of State Police, Safety Enforcement Section, LR 25:2434 (December 1999), amended by the Department of Public Safety and Corrections, Office of State Police, LR 42:439 (March 2016), LR 44:1635 (September 2018).

Subchapter E. Federal Motor Carrier Safety Regulations for Commercial Motor Vehicles (CMV)

§825. General Information

A. Certain types of vehicles are subject to federal regulations in connection with Louisiana's Motor Vehicle Inspection Program. A *commercial vehicle* is defined as any self-propelled or towed vehicle used on public highways in commerce to transport passengers or property when:

1. the vehicle has a gross vehicle weight rating or gross combination weight rating as follows:

a. interstate commerce—the vehicle travels from this state to another state and has a weight rating of 10,001 pounds or more;

b. intrastate commerce—the vehicle travels only in Louisiana and has a weight rating of 26,001 pounds or more;

2. the vehicle is designed to transport more than 15 passengers, including the driver;

3. the vehicle is used in the transportation of hazardous material in a quantity requiring placarding under regulations issued by the secretary under the Hazardous Material Transportation Act.

B. The federal regulations mandate that this motor carrier safety inspection will be conducted on an annual basis, with the commercial vehicle inspection report completed with each yearly inspection.

AUTHORITY NOTE: Promulgated in accordance with R.S. 32:1304-1310.

HISTORICAL NOTE: Promulgated by the Department of Public Safety and Corrections, Office of State Police, Safety Enforcement Section, LR 25:2437 (December 1999), amended by the Department of Public Safety and Corrections, Office of State Police, LR 42:441 (March 2016).

§827. 49 *Code of Federal Regulations* (CFR) §390.15 Motor Carrier Safety Regulations

A. The definition of a *commercial motor vehicle* is any self-propelled or towed motor vehicle used on a highway in interstate commerce to transport passengers or property when the vehicle:

1. has a gross vehicle weight rating or gross combination weight rating, or gross vehicle weight, of 4,536kg (10,001 lbs) or more, whichever is greater; or

2. is designed or used to transport more than 8 passengers (including the driver) for compensation; or

3. is designed or used to transport more than 15 passengers, including the driver, and is not used to transport passengers for compensation; or

4. is used in transporting material found by the secretary of transportation to be hazardous under 49 U.S.C. 5103 and transported in a quantity requiring placarding under regulations prescribed by the secretary under 49 CFR, subtitle B, chapter I, subchapter C.

B. 49 CFR 396.17, Periodic Inspection

1. Every commercial motor vehicle shall be inspected as required by this Section. The inspection shall include, at a minimum, the parts and accessories set forth in LAC 55:III.829. The term *commercial motor vehicle* includes each vehicle in a combination vehicle. For example, for a tractor semitrailer, full trailer combination, the tractor, semi-trailer and the full trailer (including the converter dolly if so equipped) shall be inspected.

2. Except as provided in C.F.R. 396.23, a motor carrier shall inspect or cause to be inspected all motor vehicles subject to its control.

3. A motor carrier shall not use a commercial motor vehicle unless each component identified in LAC 55:III.829 has passed an inspection in accordance with the terms of this Section at least once during the preceding 12 months. The commercial inspection certificate conforms with C.F.R. 396.17-C-2, which waives the requirement that a copy of the commercial annual inspection form be carried in the vehicle.

4. It shall be the responsibility of the motor carrier to ensure that all parts and accessories not meeting the minimum standards set forth in LAC 55:III.829 are repaired promptly.

5. Failure to perform properly the annual inspection set forth in this Section shall cause the motor carrier to be subject to the penalty provisions provided by 49 U.S.C. 521(B).

C. 49 CFR 396.21 Periodic Inspection/Record-Keeping Requirements

1. The qualified inspector performing the inspection shall complete the record of annual commercial inspection form (DPSSE 1019) in its entirety.

2. The original or a copy of the inspection report shall also be retained by the motor carrier under whose control the vehicle operates for 30 consecutive days or more, for a period of 14 months. The inspection report shall be retained where the vehicle is either housed or maintained. The original or a copy of the inspection report shall be available for inspection upon demand of an authorized federal, state or local official.

a. A copy shall be kept at the MVI station conducting the inspection for 3 years.

3. A record of annual commercial inspection form will be completed for each unit inspected, i.e., tractor, trailer, converter dolly, etc. When a record of annual commercial inspection form is completed, the regular log report need not be filled out.

4. A rejected vehicle is entitled to one free re-inspection if returned to the same inspection station within thirty days.

AUTHORITY NOTE: Promulgated in accordance with R.S. 32:1304-1310.

HISTORICAL NOTE: Promulgated by the Department of Public Safety and Corrections, Office of State Police, Safety

Enforcement Section, LR 25:2437 (December 1999), amended by the Department of Public Safety and Corrections, Office of State Police, LR 38:2558 (October 2012), LR 42:441 (March 2016).

§829. Minimum Periodic Inspection Standards

A. The mechanic inspector shall record the expired sticker number on the log report and then remove the expired sticker prior to continuing with the inspection.

1. The mechanic inspector shall conduct a review of the documents for the vehicle ensuring that all documents are in agreement.

2. Certificate of Registration. This contains information which must be verified with the corresponding information on the vehicle. A photocopy or original registration is acceptable. In lieu of a registration certificate, a vehicle may be inspected with a valid temporary license plate.

B. Vehicle Identification Number (VIN). The VIN must agree with Certificate of Registration and the insurance document. It must match the VIN displayed on the vehicle.

C. License Plate. The registration indicates a license plate number and expiration date of the plate. This information must correspond with the information displayed on the vehicle. The license plate must be valid.

1. A temporary registration authorization indicating an apportioned plate has been applied for is also acceptable in lieu of a registration. When this condition exists, no license plate is present. The temporary registration allows the vehicle to be used until the apportioned plate and cab card are issued.

D. Operator License. Must be valid and in the immediate possession of the vehicle operator. It must be presented to the mechanic inspector, and the license number must be taken from the driver's license and recorded in the appropriate block on the log report. (Be familiar with Paragraph D.3. of this Section.)

1. A valid out-of-state driver's license is acceptable. The state in which it was issued must be noted on the log report.

2. A temporary driving permit issued in connection with a traffic violation when the operator's license is held may be accepted until the permit expires on the court date noted.

3. Commercial driver’s license (CDL) and non-CDL classes;

a. combination vehicle (Class A)—having a gross combination weight rating or gross combination weight of 26,001 pounds or more, whichever is greater, inclusive of a towed unit(s) with a gross vehicle weight rating or gross vehicle weight of more than 10,000 pounds, whichever is greater; or

b. heavy straight vehicle (Class B)—having a gross vehicle weight rating or gross vehicle weight of 26,001 pounds or more, whichever is greater; or

c. small vehicle (Class C) that does not meet group A or B requirements but that either:

i. is designed to transport 16 or more passengers, including the driver; or

ii. is of any size and is used in the transportation a placard-able amount of hazardous materials as defined by 49 CFR Part 172, Subpart F.

d. Non-CDL Chauffeur’s License (Class D)—any single motor vehicle used in commerce to transport passengers or property if it has a gross vehicle weight rating of 10,001 or more pounds but less than 26,001 pounds, or any combination of vehicles used in commerce to transport passengers or property if the motor vehicle has a combined gross vehicle weight rating of 10,001 or more pounds but less than 26,001 pounds inclusive of a towed unit with a gross vehicle weight rating of more than 10,000 pounds; or any vehicle designed or utilized for the transportation of passengers for hire or fee; and not utilized in the transportation of materials found to be hazardous under the provisions of the Hazardous Materials Transportation Act which requires the vehicle to bear a placard under the provision of Hazardous Materials Regulations (49 CFR Part 172, Subpart F).

E. Proof of current liability insurance must be shown to the mechanic inspector.

1. A current certificate of insurance, motor vehicle liability insurance policy (or duplicate of the original) or a binder for the same is acceptable. A vehicle's policy identification card or photocopy of the same may also be accepted. These documents shall designate the name of the insurance company affording coverage, the policy number, the effective dates of coverage (both the beginning and ending dates are required) and a description of the vehicle covered including the VIN. A binder must be an official accord binder form and can be handwritten.

2. A copy of a motor vehicle liability bond. This document may or may not describe the vehicle covered.

3. A certificate from the state treasurer indicating a deposit was made to the state. It will not have a description of the vehicle, but the vehicle must be registered under the same name as noted on the certificate.

4. A certificate of self-insurance issued by the Louisiana Department of Public Safety and Corrections. It is not required to describe the vehicle covered.

F. License Plate Mounting and Condition: In addition to being valid, the license plate will be inspected for the following:

1. must be secured to the mounting brackets;

2. must be clean, clearly visible and readable for a distance of 50 feet to the rear of the vehicle. Plates shall not be obscured or damaged so that the numbers cannot be identified;

3. must be mounted in the rear;

4. truck-trailer, emergency firefighting equipment, dump-body trucks, trucks over 6,000 pounds and forestry product licensed vehicles may display the plate on either the front or rear of the vehicle.

G. All vehicles presented for inspection will be inspected for all of the following items: vehicle registration, vehicle license plate, driver's license and proof of liability insurance.

H. Every motor vehicle, trailer, semi-trailer and pole trailer registered in this state shall bear a valid safety inspection certificate issued in the State of Louisiana

1. Commercial Motor Vehicles, truck tractors, trailers, and semi trailers in interstate commerce which are subject to the Federal Motor Carrier Safety Regulations shall be exempt from the inspection requirements if,

2. the truck/truck tractor is registered with an apportioned plate or the trailer and semi trailer is being pulled by a truck/truck tractor registered with an apportioned plate.

a. The vehicle must have an alternate means of compliance with the requirements of 49 CFR. (See exemptions under 32:131(D)

I. As per minimum periodic inspection standards, a vehicle shall be issued a restricted rejection certificate if it has any one of the following defects or deficiencies.

J. Brake System

1. Service Brakes

a. Absence of braking action on any axle required to have brakes upon application of the service brakes (such as missing brakes or brakes shoe(s) failing to move upon application of a wedge, s-cam or disc brake).

b. Missing or broken mechanical components, including shoes, lining, pads, springs, anchor pins, spiders and cam shaft support brackets.

c. Loose brake components including air chambers, spiders, and cam shaft support brackets.

d. Audible air leak at brake chamber (ex. ruptured diaphragm, loose chamber clamp, etc.).

e. Readjustment Limits

i. The maximum pushrod stroke must not be greater than the values given in the tables below and at 393.47(e). Any brake stroke exceeding the readjustment limit will be rejected. Stroke must be measured with engine off and reservoir pressure of 80 to 90 psi with brakes fully applied. Do not attempt to adjust automatic slack adjusters.

(a). The Maximum Stroke at which Brakes Should be Readjusted

Clamp-Type Brake Chamber Data			
Type	**Outside Diameter**	**Brake Readjustment Limit Standard Stroke Chamber**	**Brake Readjustment Limit Long Stroke Chamber**
6	4 1/2 inch	1 1/4 inch	
9	5 1/4 inch	1 3/8 inch	
12	5 11/16 inch	1 3/8 inch	1 3/4 inch
16	6 3/8 inch	1 3/4	2 inch
20	6 25/32 inch	1 3/4 inch	2 inch 2 1/2 inch (For 3" rated stroke)
24	7 7/32 inch	1 3/4 inch	2 2 1/2 inch (For 3" rated stroke)
30	8 3/32 inch	2 inch	2 1/2 inch
36	9 inch		

Bendix DD-3 Brake Chambers		
Type	**Outside Diameter**	**Maximum Stroke At Which Brakes Should Be Readjusted**
30	8 1/2 in.	2 1/4 inch

Bolt Type Brake Chamber Data		
Type	**Outside Diameter**	**Maximum Stroke At Which Brakes Should Be Readjusted**
A	6 15/16 inch	1 3/8 inch
B	9 3/16 inch	1 3/4 inch
C	8 1/16 inch	1 3/4 inch
D	5 1/4 inch	1 1/4inch
E	6 3/16 inch	1 3/8 inch
F	11 inch	2 1/4 inch
G	9 7/8 inch	2 inch

Rotochamber Data		
Type	**Outside Diameter**	**Maximum Stroke At Which Brakes Should Be Readjusted**
9	4 9/32 inch	1 1/2 inch
12	4 13/16 inch	1 1/2 inch
16	5 13/32 inch	2 inch
20	5 15/16 inch	2 inch
24	6 13/32 inch	2 inch
30	7 1/16 inch	2 1/4 inch
36	7 5/8 inch	2 3/4 inch
50	8 7/8 inch	3 inch

(b). For actuator types not listed in these tables, the pushrod stroke must not be greater than 80 percent of the rated stroke marked on the actuator by the actuator or manufacturer, or greater than the readjustment limit marked on the actuator by the actuator manufacturer.

f. Brake Lining or Pads

i. lining or pad is not firmly attached to the shoe;

ii. saturated with oil, grease or brake fluid;

iii. non-steering axles. Lining with a thickness less than 1/4 inch at the shoe center for air drum brakes, 1/16 inch or less at the shoe center for hydraulic and electric drum brakes, and less than 1/8 inch for air disc brakes;

iv. steering axle. Lining with a thickness less than 1/4 inch at the shoe center from drum brakes, less than 1/8

inch for air disc brakes and 1/16 inch or less for hydraulic disc and electric brakes.

g. Missing brakes on axle required to have brakes.

h. Mismatch across any power unit steering axle of:

i. air chamber size;

ii. slack adjuster length;

iii. wedge brake data—movement of the scribe mark on the lining shall not exceed 1/16 inch.

2. Parking Brake System. No brakes on the vehicle or combination are applied upon actuation of the parking brake control, including drive line hand controlled parking brakes.

3. Brake Drums or Rotors—

a. with any external crack or cracks that open upon brake application (do not confuse short hairline heat check cracks with flexural cracks);

b. any portion of the drum or rotor missing or in danger of falling away.

4. Brake Hose—

a. hose with any damage extending through the outer reinforcement ply. (Rubber impregnated fabric cover is not a reinforcement ply.) (Thermoplastic nylon may have braid reinforcement or color difference between cover and inner tube. Exposure of second color is cause for rejection.);

b. bulge or swelling when air pressure is applied;

c. any audible leaks;

d. two hoses improperly joined (such as a splice made by slicing the hose ends over a piece of tubing and clamping the hose to the tube). (Exception: A splice utilizing a reverse claw connector is acceptable.);

e. air hose cracked, damaged by heat, broken or crimped.

5. Brake Tubing—

a. any audible leaks;

b. tubing cracked, damaged by heat, broken or crimped.

6. Low Pressure Warning Device. Missing, inoperative or does not operate at 55 psi and below, or one-half the governor cut-out pressure, whichever is less.

7. Tractor Protection Valve. Inoperable or missing tractor protection valve(s) on power unit.

8. Air Compressor—

a. compressor drive belts in condition of impending or probable failure;

b. loose compressor mounting bolts;

c. cracked, broken or loose pulley;

d. cracked or broken mounting brackets, braces or adapters.

9. Electric Brakes—

a. absence of braking action on any wheel required to have brakes;

b. missing or inoperable breakaway braking device.

10. Hydraulic Brakes (including power assist over hydraulic and engine drive hydraulic booster)—

a. master cylinder less than one-fourth full;

b. no pedal reserve with engine running except by pumping pedal;

c. power assist unit fails to operate;

d. seeping or swelling brake hose(s) under application of pressure;

e. missing or inoperable check valve;

f. has any visually observed leaking hydraulic fluid in the brake system;

g. has hydraulic hose(s) abraded (chafed) through outer cover to fabric layer;

h. fluid lines or connections leaking, restricted, crimped or broken;

i. brake failure or low fluid warning light on and/or inoperable.

11. Vacuum System—

a. has insufficient vacuum reserve to permit one full brake application after engine is shut off;

b. has vacuum hose(s) or line(s) restricted, abraded (chafed) through outer cover to cord ply, crimped, cracked, broken or has collapse of vacuum hose(s) when vacuum is applied;

c. lacks an operable low-vacuum warning device as required.

K. Coupling Devices

1. Fifth Wheels

a. Mounting to Frame—

i. any fasteners missing or ineffective;

ii. any movements between mounting components;

iii. any mounting angle iron cracked or broken.

b. Mounting plates and pivot brackets—

i. any fasteners missing or ineffective;

ii. any welds or parent metal cracked;

iii. more than 3/8 inch horizontal movement between pivot bracket pin and bracket.

iv. pivot bracket pin missing or not secured.

c. Sliders—

i. any latching fasteners missing or ineffective;

ii. any fore or aft stop missing or not securely attached;

iii. movement more than 3/8 inch between slider bracket and slider base;

iv. any slider component cracked in parent metal or weld;

d. Lower Coupler—

i. horizontal movement between the upper and lower fifth wheel halves exceeds 1/2 inch;

ii. operating handle not in closed or locked position;

iii. kingpin not properly engaged;

iv. separation between upper and lower coupler allowing light to show through from side to side;

v. crack in the fifth wheel plate. Exceptions: Cracks in the fifth wheel approach ramps and casting shrinkage cracks in the ribs of the body or a cast fifth wheel;

vi. locking mechanism parts missing, broken or deformed to the extent the kingpin is not securely held.

2. Pintle Hooks

a. Mounting to Frame—

i. any missing or ineffective fasteners (a fastener is not considered missing if there is an empty hole in the device, but no corresponding hole in the frame or vice versa);

ii. mounting surface cracks extending from point of attachment (e.g., cracks in the frame at mount bolt holes);

iii. loose mounting;

iv. frame cross member providing pintle hook attachment cracked;

b. Integrity—

i. cracks anywhere in pintle hook assembly;

ii. any welded repairs to the pintle hook;

iii. any part of the horn section reduced by more than 20 percent;

iv. latch insecure.

3. Drawbar/Towbar Eye

a. Mounting—

i. any cracks in attachment welds;

ii. any missing or ineffective fasteners.

b. Integrity—

i. any cracks;

ii. any part of the eye reduced by more than 20 percent.

4. Drawbar/Towbar Tongue

a. Slider (Power or Manual)—

i. ineffective latching mechanism;

ii. missing or ineffective stop;

iii. movement of more than 1/4 inch between slider and housing;

iv. any leaking, air or hydraulic cylinders, hoses or chambers (other than slight oil weeping normal with hydraulic seals).

b. Integrity—

i. any cracks;

ii. movement of 1/4 inch between subframe and drawbar at point of attachment.

5. Safety Devices—

a. safety devices missing;

b. unattached or incapable of secure attachment;

c. chains and hooks:

i. worn to the extent of a measurable reduction in link cross section;

ii. improper repairs including welding, wire or small bolts, rope and tape.

d. cable:

i. kinked or broken cable stands;

ii. improper clamps or clamping.

6. Saddle-Mounts

a. Method of Attachment—

i. any missing or ineffective fasteners;

ii. loose mountings;

iii. any cracks or breaks in a stress or load bearing member;

iv. horizontal movement between upper and lower saddle-mount halves exceeds 1/4 inch.

L. Exhaust System—

1. any exhaust system determined to be leaking at a point forward of or directly below the driver/sleeper compartment;

2. a bus exhaust system leaking or discharging to the atmosphere:

a. gasoline powered—excess of 6 inches forward of the rearmost part of the bus;

b. other than gasoline powered—in excess of 15 inches forward of the rear most part of the bus;

c. other than gasoline powered—forward of the door or window designed to be opened. (Exception: Emergency exits);

3. no part of the exhaust system of any motor vehicle shall be so located as would be likely to result in burning, charring, damaging the electrical wiring, the fuel supply or any combustible part of the motor vehicle.

M. Fuel System—

1. a fuel system with a visible leak at any point;

2. a fuel tank filler cap missing;

3. a fuel tank not securely attached to the motor vehicle by reason of loose, broken or missing mounting bolts or brackets (some fuel tanks use springs or rubber bushing to permit movement).

N. Lighting Devices. All lighting devices and reflectors required by 49 CFR part 393 shall be operable.

O. Safe Loading—

1. part(s) of the vehicle or condition of loading such that the spare tire or any part of the load or dunnage can fall onto the roadway;

2. protection against shifting cargo. Any vehicle without a front-end structure or equivalent device as required.

P. Steering Mechanism

1. Steering Wheel Free Play—

a. on vehicles equipped with power steering the engine must be running.

Steering Wheel Diameter	Manual Steering System	Power Steering System
16"	2"	4 1/2"
18"	2 1/4"	4 3/4"
20"	2 1/2"	5 1/4"
22”	2 3/4"	5 3/4"

2. Steering Column—

a. any absence or looseness of u-bolt(s) or positioning part(s);

b. worn, faulty or obviously repair welded universal joints;

c. steering wheel not properly secured.

3. Front Axle Beam and all Steering Components other than Steering Column—

a. any crack(s);

b. any obvious welded repair(s).

4. Steering Gear Box

a. Any mounting bolt(s) loose or missing;

b. any crack(s) in gear box or mounting brackets.

5. Pitman Arm. Any looseness of the pitman arm on the steering gear output shaft.

6. Power Steering—auxiliary power assist cylinder loose.

7. Ball and Socket Joints—

a. any movement under steering load of a stud nut;

b. any motion, other than rotational, between any linkage member and its attachment point of more than 1/4 inch.

8. Tie Rods and Drag Links—

a. loose clamp(s) or clamp bolt(s) on tie rods or drag links;

b. any looseness in any threaded joint.

9. Nuts—loose or missing on tie rods, pitman arm, drag link, steering arm or tie rod arm.

10. Steering System. Any modification or other condition n that interferes with free movement of any steering component.

Q. Suspension—

1. any u-bolt(s), spring hanger(s) or other axle positioning part(s) cracked, broken, loose or missing resulting in shifting of an axle from its normal position (after a turn, lateral axle displacement is normal with some suspensions. Forward or rearward operation in a straight line will cause the axle to return to alignment).

2. Spring Assembly—

a. any leaves in a leaf spring assembly broken or missing;

b. any broken main leaf in a leaf spring assembly (includes assembly with more than one main spring);

c. coil spring broken;

d. rubber spring missing;

e. one or more leaves displaced in a manner that could result in contact with a tire, rim, brake drum or frame;

f. broken torsion bar spring in a torsion bar suspension;

g. deflated air suspension, i.e., system failure, leak, etc.

3. Torque, Radius, or Tracking Components—

a. Any part of a torque, radius or tracking component assembly or any part used for attaching the same to the vehicle frame or axle that is cracked, loose, broken or missing. (Does not apply to loose bushing in torque or track rods.)

R. Frame

1. Frame Member—

a. any cracked, broken loose or sagging frame member;

b. any loose or missing fasteners including fasteners attaching functional components such as engine, transmission, steering gear suspension, body parts and fifth wheel.

2. Tire and wheel clearance—any condition, including loading, that causes the body or frame to be in contact with a tire or any part of the wheel assembly.

3. Adjustable axle Assemblies—adjusting axle assembly with locking pins missing or not engaged.

S. Tires

1. Any tire on any steering axle of a power unit:

a. with less than 4/32-inch tread when measured at any point on a major tread groove;

b. has body ply or belt material exposed through the tread or sidewall;

c. has any tread or sidewall separation;

d. has a cut where the ply or belt material is exposed;

e. labeled "Not for Highway Use" or displaying other markings which would exclude use on steering axle;

f. a tube-type radial tire without radial tube stem markings. These markings include a red band around the tube stem or the word Radial embossed in metal stems, or the word Radial molded in rubber stems;

g. mixing bias and radial tires on the same axle;

h. tire flap protrudes through valve slot in rim and touches stem;

i. re-grooved tire except motor vehicles used solely in urban or suburban service [see exception in 49 CFR 393.75(e)];

j. boot, blowout patch or other ply repairs;

k. weight carried exceeds tire load limit. This includes overloaded tire resulting from low air pressure;

l. tire is flat or has noticeable (e.g., can be heard or felt) leak;

m. any bus equipped with recapped or retreaded tire(s);

n. so mounted or inflated that it comes in contact with any part of the vehicle.

2. All tires other than those found on the steering axle of a power unit:

a. weight carried exceeds tire load limit. This includes overloaded tire(s) resulting from low air pressure;

b. tire is flat or has noticeable (e.g., can be heard or felt) leak;

c. has body ply or belt material exposed through the tread or sidewall;

d. has any tread or sidewall separation;

e. has a cut where ply or belt material is exposed;

f. so mounted or inflated that it comes in contact with any part of the vehicle (this includes a tire that contacts its mate);

g. is marked "Not for Highway Use" or otherwise marked and having like meaning;

h. with less than 2/32-inch tread when measured at any point on a major tread groove.

T. Wheels and Rims

1. Lock or Side Ring. Bent, broken, cracked, improperly seated, sprung or mismatched ring(s).

2. Wheels and Rims. Cracked or broken or has elongated bolt holes.

3. Fasteners (both spoke and disc wheels). Any loose, missing, broken, cracked, stripped or otherwise ineffective fasteners.

4. Welds

a. Any cracks in welds attaching disc wheel disc to rim;

b. any cracks in welds attaching tubeless demountable rim to adapter;

c. any welded repair on aluminum wheel(s) on steering axle;

d. any welded repair other than disc to rim attachment on steel disc wheel(s) mounted on the steering axle.

U. Windshield Glazing

1. Any crack, discoloration or vision reducing matter except:

a. coloring or tinting applied at the time of manufacture;

b. any crack not over 1/4-inch wide if not intersected by any other crack;

c. any damage area not more than 3/4-inch in diameter, if not closer than 3 inches to any other such damaged area;

d. labels, stickers, decals, etc. (see 49 CFR 393.60 for exceptions).

2. These prohibitions shall not apply to the area consisting of a 2 inch border at the top, a 1 inch border at each side and the area below the topmost portion of the steering wheel.

3. Coloring or tinting of windshields and the windows to the immediate right and left of the driver is allowed, provided the parallel luminous transmittance through the

colored or tinted glazing is not less than 70 percent of the light at normal incidence in those portions of the windshield or windows which are marked as having a parallel luminous transmittance of not less that 70 percent. The transmittance restriction does not apply to other windows on the commercial motor vehicle.

V. Windshield wiper—any power unit that has an inoperable wiper, or missing or damaged parts that render it ineffective.

W. Fire Extinguisher. Fire extinguisher must be properly filled and securely fastened in an approved type mount in a readily accessible location on the power unit.

X. Bi-directional triangles—three bi-directional emergency reflective triangles that conform to the requirements of Federal Motor Safety Standard No. 125, 571.125.

AUTHORITY NOTE: Promulgated in accordance with R.S. 32:1304-1310.

HISTORICAL NOTE: Promulgated by the Department of Public Safety and Corrections, Office of State Police, Safety Enforcement Section, LR 25:2438 (December 1999), amended by the Department of Public Safety and Corrections, Office of State Police, LR 38:2558 (October 2012), LR 42:442 (March 2016), LR 44:1635 (September 2018).

§831. Additional Requirements

A. All vehicles presented for inspection for motor carrier shall also comply to all safety requirements where applicable.

AUTHORITY NOTE: Promulgated in accordance with R.S. 32:1304-1310.

HISTORICAL NOTE: Promulgated by the Department of Public Safety and Corrections, Office of State Police, Safety Enforcement Section, LR 25:2441 (December 1999).

Subchapter F. Administrative and Audit Procedures

§833. Investigations; Administrative Actions; Sanctions

A. The Motor Vehicle Inspection station owner/operator may be investigated for violating any requirement imposed by any inspection law, or any rule or regulation set forth by this department. The department may initiate an administrative proceeding to require the Motor Vehicle Inspection station owner/operator to comply with any requirement contained in any statute or any rule or regulation. The department may also issue an action or order in connection with a violation of any statute or rule to impose an administrative sanction including a suspension, revocation or cancellation of any license, permit, certificate or authorization issued pursuant to LAC 55, Part III, Chapter 8 or to impose a civil administrative fine.

B. A person who has been denied any license, permit, certification or authorization provided by LAC 55, Part III, Chapter 8, as well as any person who has been subject to any action, order or decision of the department pursuant to LAC 55, Part III, Chapter 8, may make a written request for an administrative hearing to review such action, order, decision, or denial within 30 days of the date of such action, order, decision, or denial. The failure to make a timely written request as provided in LAC 55, Part III, Chapter 8, §805 shall result in such action, order, decision, or denial becoming final and no longer subject to review. The 30 day period provided in LAC 55, Part III, Chapter 8, §805.B shall commence on the date the action, order, decision, or denial is mailed or hand delivered to the person, as the case may be.

C. The department may immediately and temporarily suspend the license of a Motor Vehicle Inspection station prior to providing an administrative hearing when it is determined that the station has violated any of the provisions of LAC 55:III.819. In the event of such an immediate and temporary suspension of its license, the station is entitled to an administrative hearing to be held within 14 days of the initial date of suspension.

AUTHORITY NOTE: Promulgated in accordance with R.S. 32:1304-1310.

HISTORICAL NOTE: Promulgated by the Department of Public Safety and Corrections, Office of State Police, Safety Enforcement Section, LR 25:2441 (December 1999), amended LR 27:2260 (December 2001), repromulgated LR 28:345 (February 2002).

§835. Declaratory Orders and Rulings

A.1. Any person desiring a ruling on the applicability of R.S. 32:1301 et seq., or any other statute, or the applicability or validity of any rule, regarding the inspection of motor vehicles as provided in Louisiana Motor Vehicle Inspection Law shall submit a written petition to the deputy secretary for the department.

2. The written petition shall cite all constitutional provisions, statutes, ordinances, cases, and rules which are relevant to the issue presented or which the person wishes the deputy secretary to consider prior to rendering an order or ruling in connection with the petition. The petition shall be typed, printed or written legibly, and signed by the person seeking the ruling or order. The petition shall also contain the person's full printed name, the complete physical and mailing address of the person, and a daytime telephone number.

B. If the petition seeks an order or ruling on any action, order or decision of the department, including the issuance or denial of any license, permit, certification, authorization or approval, the person submitting the petition shall notify all persons specifically named in the action, order or decision, if the person submitting the petition is not one of the named persons. Such notice shall be sent by certified mail, return receipt requested. In such case, the petition shall not be considered until proof of such notice has been submitted to the deputy secretary, or until the person petitioning for the order or ruling establishes that the person required to receive notice cannot be notified after a due and diligent effort. The notice shall include a copy of the petition submitted to the deputy secretary.

C. The deputy secretary, or his designee, may request the submission of legal memoranda to be considered in

rendering any order or ruling. The deputy secretary or his designee shall base the order or ruling on the documents submitted including the petition and legal memoranda. If the deputy secretary or his designee determines that the submission of evidence is necessary for a ruling, the matter may be referred to a hearing officer prior to the rendering of the order or ruling for the taking of such evidence.

D. Notice of the order or ruling shall be sent to the person submitting the petition as well as all other persons provider receiving notice of the petition at the mailing addresses provided in connection with the petition.

E. The deputy secretary may decline to render an order or ruling if the person submitting the petition has failed to comply with any requirement in this Section.

AUTHORITY NOTE: Promulgated in accordance with R.S. 32:1301 et seq. and R.S. 49:962.
HISTORICAL NOTE: Promulgated by the Department of Public Safety and Corrections, Office of State Police, Safety Enforcement Section, LR 25:2442 (December 1999).

Chapter 11. Vehicle Safety Equipment

Subchapter A. Motorcycle Helmets

§1101. Scope, Purpose and Application

A. Scope. This standard establishes minimum performance requirements for helmets designed for use by motorcyclists and other motor vehicle users.

B. Purpose. To reduce deaths and injuries to motorcyclists and other motor vehicle users resulting from head impacts.

C. Application. This standard applies to all helmets designed for use by motorcyclists and other motor vehicle users.

AUTHORITY NOTE: Promulgated in accordance with R.S. 32:190.
HISTORICAL NOTE: Promulgated by the Department of Public Safety and Corrections, Office of State Police, LR 27:62 (January 2001).

§1102. Definitions

Basic Plane—a plane through the centers of the right and left external ear openings and the lower edge of the eye sockets (§1131.B.Figure 1) of a reference headform (§1131.C.Figure 2) or test headform.

Helmet Positioning Index—the distance in inches, as specified by the manufacturer, from the lowest point of the brow opening at the lateral midpoint of the helmet to the basic plane of a reference headform, when the helmet is firmly and properly positioned on the reference headform.

Mid-Sagittal Plane—a longitudinal plane through the apex of a reference headform or test headform that is perpendicular to the basic plane (§1131.D.Figure 3).

Reference Headform—a measuring device contoured to the dimensions of one of the three headforms described in §1131.F.-M. (Table 2 and Figures 5 through 8) with surface markings indicating the locations of the basic, mid-sagittal, and reference planes, and the centers of the external ear openings.

Reference Plane—a plane above and parallel to the basic plane on a reference headform or test headform (§1131.C.Figure 2) at the distance indicated in Table 2.

Retention System—the complete assembly by which the helmet is retained in position on the head during use.

Test Headform—a test device contoured to the dimensions of one of the three headforms described in §1131.F.-M (Table 2 and Figures 5 through 8) with surface markings indicating the locations of the basic, mid-sagittal, and reference planes.

AUTHORITY NOTE: Promulgated in accordance with R.S. 32:190.
HISTORICAL NOTE: Promulgated by the Department of Public Safety and Corrections, Office of State Police, LR 27:62 (January 2001).

§1103. Requirements

A. Each helmet shall meet the requirements of §1104, §1105, and §1106 when subjected to any conditioning procedure specified in §1114, and tested in accordance with §1116, §1117, and §1118.

AUTHORITY NOTE: Promulgated in accordance with R.S. 32:190.
HISTORICAL NOTE: Promulgated by the Department of Public Safety and Corrections, Office of State Police, LR 27:62 (January 2001).

§1104. Impact Attenuation

A. When an impact attenuation test is conducted in accordance with §1116, all of the following requirements shall be met:

1. peak accelerations shall not exceed 400g;

2. accelerations in excess of 200g shall not exceed a cumulative duration of 2.0 milliseconds; and

3. accelerations in excess of 150g shall not exceed a cumulative duration of 4.0 milliseconds.

AUTHORITY NOTE: Promulgated in accordance with R.S. 32:190.
HISTORICAL NOTE: Promulgated by the Department of Public Safety and Corrections, Office of State Police, LR 27:62 (January 2001).

§1105. Penetration

A. When a penetration test is conducted in accordance with §1117, the striker shall not contact the surface of the test headform.

AUTHORITY NOTE: Promulgated in accordance with R.S. 32:190.
HISTORICAL NOTE: Promulgated by the Department of Public Safety and Corrections, Office of State Police, LR 27:62 (January 2001).

§1106. Retention System

A. When tested in accordance with §1118:

1. the retention system or its components shall attain the loads specified without separation; and

2. the adjustable portion of the retention system test device shall not move more than 1 inch (2.5 cm) measured between preliminary and test load positions.

B. Where the retention system consists of components which can be independently fastened without securing the complete assembly, each such component shall independently meet the requirements of §1106.A.

AUTHORITY NOTE: Promulgated in accordance with R.S. 32:190.
HISTORICAL NOTE: Promulgated by the Department of Public Safety and Corrections, Office of State Police, LR 27:62 (January 2001).

§1107. Configuration

A. Each helmet shall have a protective surface of continuous contour at all points on or above the test line described in §1113.C. The helmet shall provide peripheral vision clearance of at least 105° to each side of the mid-sagittal plane, when the helmet is adjusted as specified in §1114. The vertex of these angles, shown in §1131.D.Figure 3, shall be at the point on the anterior surface of the reference headform at the intersection of the mid-sagittal and basic planes. The brow opening of the helmet shall be at least 1 inch (2.5 cm) above all points in the basic plane that are within the angles of peripheral vision (see §1131.D.Figure 3).

AUTHORITY NOTE: Promulgated in accordance with R.S. 32:190.
HISTORICAL NOTE: Promulgated by the Department of Public Safety and Corrections, Office of State Police, LR 27:62 (January 2001).

§1108. Projections

A. A helmet shall not have any rigid projections inside its shell. Rigid projections outside any helmet's shell shall be limited to those required for operation of essential accessories, and shall not protrude more than 0.20 inch (5 mm).

AUTHORITY NOTE: Promulgated in accordance with R.S. 32:190.
HISTORICAL NOTE: Promulgated by the Department of Public Safety and Corrections, Office of State Police, LR 27:63 (January 2001).

§1109. Labeling

A. Each helmet shall be labeled permanently and legibly, in a manner such that the label(s) can be read easily without removing padding or any other permanent part, with the following:

1. manufacturer's name or identification;

2. precise model designation;

3. size;

4. month and year of manufacture. This may be spelled out (for example, June 1988), or expressed in numerals (for example, 6/88);

5. the symbol DOT, constituting the manufacturer's certification that the helmet conforms to the applicable federal motor vehicle safety standards. This symbol shall appear on the outer surface, in a color that contrasts with the background, in letters at least 3/8 inch (1 cm) high, centered laterally with the horizontal centerline of the symbol located a minimum of 1 1/8 inches (2.9 cm) and a maximum of 1 3/4 inches (3.5 cm) from the bottom edge of the posterior portion of the helmet;

6. instructions to the purchaser as follows:

a. shell and liner constructed of [identify type(s) of materials];

b. helmet can be seriously damaged by some common substances without damage being visible to the user. Apply only the following: recommended cleaning agents, paint, adhesives, etc., as appropriate;

c. make no modifications. Fasten helmet securely. If helmet experiences a severe blow, return it to the manufacturer for inspection, or destroy it and replace it;

d. any additional relevant safety information should be applied at the time of purchase with an attached tag, brochure, or other suitable means.

AUTHORITY NOTE: Promulgated in accordance with R.S. 32:190.
HISTORICAL NOTE: Promulgated by the Department of Public Safety and Corrections, Office of State Police, LR 27:63 (January 2001).

§1110. Helmet Positioning Index

A. Each manufacturer of helmets shall establish a positioning index for each helmet manufactured. This index shall be furnished immediately to any person who requests the information, with respect to a helmet identified by manufacturer, model designation, and size.

AUTHORITY NOTE: Promulgated in accordance with R.S. 32:190.
HISTORICAL NOTE: Promulgated by the Department of Public Safety and Corrections, Office of State Police, LR 27:63 (January 2001).

§1111. Preliminary Test Procedures

A. Before subjecting a helmet to the testing sequence specified in §1112, the helmet shall be prepared according to the procedures in §1112, §1113 and §1114.

AUTHORITY NOTE: Promulgated in accordance with R.S. 32:190.
HISTORICAL NOTE: Promulgated by the Department of Public Safety and Corrections, Office of State Police, LR 27:63 (January 2001).

§1112. Selection of Appropriate Headform

A. A helmet with a manufacturer's designated discrete size or size range which does not exceed 6 3/4 (European size: 54) shall be tested on the small headform. A helmet with a manufacturer's designated discrete size or size range which exceeds 6 3/4, but does not exceed 7 1/2 (European size: 60) shall be tested on the medium headform. A helmet

with a manufacturer's designated discrete size or size range which exceeds 7 1/2 shall be tested on the large headform.

B. A helmet with a manufacturer's designated size range which includes sizes falling into two or all three size ranges described in §1112.A shall be tested on each headform specified for each size range.

AUTHORITY NOTE: Promulgated in accordance with R.S. 32:190.

HISTORICAL NOTE: Promulgated by the Department of Public Safety and Corrections, Office of State Police, LR 27:63 (January 2001).

§1113. Reference Marking

A. Only a reference headform that is firmly seated with the basic and reference planes horizontal may be used. The completed helmet to be tested shall be placed on the appropriate reference headform, as specified in §1112.A and §1113.B.

B. A 10 pound (4.5 kg) static vertical load shall be applied through the helmet's apex. The helmet shall be centered laterally and seated firmly on the reference headform according to its helmet positioning index.

C. While maintaining the load and position described in §1113.C, a line shall be drawn (hereinafter referred to as test line) on the outer surface of the helmet coinciding with portions of the intersection of that service with the following planes, as shown in §1131.C.Figure 2:

1. a plane 1 inch (2.5 cm) above and parallel to the reference plane in the anterior portion of the reference headform;

2. a vertical transverse plane 2.5 inches (6.4 cm) behind the point on the anterior surface of the reference headform at the intersection of the mid-sagittal and reference planes;

3. the reference plane of the reference headform;

4. a vertical transverse plane 2.5 inches (6.4. cm) behind the center of the external ear opening in a side view; and

5. a plane 1 inch (2.5 cm) below and parallel to the reference plane in the posterior portion of the reference headform.

AUTHORITY NOTE: Promulgated in accordance with R.S. 32:190.

HISTORICAL NOTE: Promulgated by the Department of Public Safety and Corrections, Office of State Police, LR 27:63 (January 2001).

§1114. Helmet Positioning

A. Before each test, the helmet shall be fixed on a test headform in the position that conforms to its helmet positioning index. The helmet shall be secured so that it does not shift position before impact or before application of force during testing.

B. In testing as specified in §1116 and §1117, the retention system shall be placed in a position such that it does not interfere with free fall, impact or penetration.

AUTHORITY NOTE: Promulgated in accordance with R.S. 32:190.

HISTORICAL NOTE: Promulgated by the Department of Public Safety and Corrections, Office of State Police, LR 27:64 (January 2001).

§1115. Conditioning

A. Immediately before conducting the testing sequence specified in §1116, each test helmet shall be conditioned in accordance with any one of the following procedures:

1. ambient conditions. Expose to a temperature of 70°F (21°C) and a relative humidity of 50 percent for 12 hours;

2. low temperature. Expose to a temperature of 14°F (-10°C) for 12 hours;

3. high temperature. Expose to a temperature of 122°F (50°C) for 12 hours;

4. water immersion. Immerse in water at a temperature of 77°F (25°C) for 12 hours.

B. If during testing, as specified in §1116.C and §1117.C, a helmet is returned to the conditioning environment before the time out of that environment exceeds four minutes, the helmet shall be kept in the environment for a minimum of 3 minutes before resumption of testing with that helmet. If the time out of the environment exceeds 4 minutes, the helmet shall be returned to the environment for a minimum of 3 minutes for each minute or portion of a minute that the helmet remained out of the environment in excess of 4 minutes or for a maximum of 12 hours, whichever is less, before the resumption of testing with that helmet.

AUTHORITY NOTE: Promulgated in accordance with R.S. 32:190.

HISTORICAL NOTE: Promulgated by the Department of Public Safety and Corrections, Office of State Police, LR 27:64 (January 2001).

§1116. Test Conditions

A. Impact Attenuation Test. Impact attenuation is measured by determining acceleration imparted to an instrumented test headform on which a complete helmet is mounted as specified in §1114, when it is dropped in guided free fall upon a fixed hemispherical anvil and a fixed flat steel anvil.

B. Each helmet shall be impacted at four sites with two successive identical impacts at each site. Two of these sites shall be impacted upon a flat steel anvil and two upon a hemispherical steel anvil as specified in §1116.I and §1116.J. The impact sites shall be at any point on the area above the test line described in Paragraph §1113.C, and separated by a distance not less than one-sixth of the maximum circumference of the helmet in the test area.

C. Impact testing at each of the four sites, as specified in §1116.B, shall start at two minutes, and be completed by four minutes, after removal of the helmet from the conditioning environment.

1. The guided free fall drop height for the helmet and test headform combination onto the hemispherical anvil shall be such that the minimum impact speed is 17.1 feet/second (5.2 m/sec). The minimum drop height is 54.5 inches (138.4 cm). The drop height shall be adjusted upward from the minimum to the extent necessary to compensate for friction losses.

2. The guided free fall drop height for the helmet and test headform combination onto the flat anvil shall be such that the minimum impact speed is 19.7 ft./sec (6.0 m/sec). The minimum drop height shall be 72 inches (182.9 cm). The drop height shall be adjusted upward from the minimum to the extent necessary to compensate for friction losses.

D. Test headforms for impact attenuation testing shall be constructed of magnesium alloy (K-1A), and exhibit no resonant frequencies below 2,000 Hz.

E. The monorail drop test system shall be used for impact attenuation testing.

F. The weight of the drop assembly, as specified in Table 1, shall be the combined weight of the test headform and the supporting assembly for the drop test. The weight of the supporting assembly shall not be less than 2.0 lbs. and not more than 2.4 lbs. (0.9 to 1.1 kg). The supporting assembly weight for the monorail system shall be the drop assembly weight minus the combined weight of the test headform, the headform's clamp down ring, and its tie down screws.

G. The center of gravity of the test headform shall be located at the center of the mounting ball on the supporting assembly and lie within a cone with its axis vertical and forming a 10 degree included angle with the vertex at the point of impact. The center of gravity of the drop assembly shall lie within the rectangular volume bounded by x = -0.25 inch (-0.64 cm), x = 0.85 inch (2.16 cm), y = 0.25 inch (0.64 cm), and y = -0.25 inch (-0.64 cm) with the origin located at the center of gravity of the test headform. The rectangular volume shall have no boundary along the z-axis. The x-y-z axes shall be mutually perpendicular and shall have positive or negative designations in accordance with the right-hand rule (see §1131.F.Figure 5). The origin of the coordinate axes shall also be located at the center of the mounting ball on the supporting assembly (see §1131.K.-M.Figures 6, 7, and 8). The x-y-z axes of the test headform assembly on a monorail drop test equipment shall be oriented as follows: From the origin, the x-axis shall be horizontal with its positive direction going toward and passing through the vertical centerline of the monorail. The positive z-axis shall be downward. The y-axis shall also be horizontal and its direction will be decided by the z- and x-axes, using the right-hand rule.

H. The acceleration transducer shall be mounted at the center of gravity of the test headform with the sensitive axis aligned to within 5 degrees of vertical when the test headform assembly is in the impact position. The acceleration data channel shall comply with SAE Recommended Practice J211 JUN 80, Instrumentation for Impact Tests, requirements for channel class 1,000.

I. The flat anvil shall be constructed of steel with a 5-inch (12.7 cm) minimum diameter impact face, and the hemispherical anvil shall be constructed of steel with a 1.9 inch (4.8 cm) radius impact face.

J. The rigid mount for both of the anvils shall consist of a solid mass of at least 300 pounds (136.1 kg), the outer surface of which shall consist of a steel plate with minimum thickness of 1 inch (2.5 cm) and minimum surface area of 1 ft^2 (929 cm^2).

K. The drop system shall restrict side movement during the impact attenuation test so that the sum of the areas bounded by the acceleration-time response curves for both the x- and y-axes (horizontal axes) shall be less than 5 percent of the area bounded by the acceleration-time response curve for the vertical axis.

AUTHORITY NOTE: Promulgated in accordance with R.S. 32:190.

HISTORICAL NOTE: Promulgated by the Department of Public Safety and Corrections, Office of State Police, LR 27:64 (January 2001).

§1117. Penetration Test

A. The penetration test shall be conducted by dropping the penetration test striker in guided free fall, with its axis aligned vertically, onto the outer surface of the complete helmet, when mounted as specified in §1114, at any point above the test line, described in §1114.B except on a fastener or other rigid projection.

B. Two penetration blows shall be applied at least 3 inches (7.6 cm) apart, and at least 3 inches (7.6 cm) from the centers of any impacts applied during the impact attenuation test.

C. The application of the two penetration blows, specified in §1117.B, shall start at two minutes and be completed by 4 minutes, after removal of the helmet from the conditioning environment.

D. The height of the guided free fall shall be 118.1 inches (3 m), as measured from the striker point to the impact point on the outer surface of the test helmet.

E. The contactable surface of the penetration test headform shall be constructed of a metal or metallic alloy having a Brinell hardness number no greater than 55, which will permit ready detection should contact by the striker occur. The surface shall be refinished if necessary before each penetration test blow to permit detection of contact by the striker.

F. The weight of the penetration striker shall be 6 pounds, 10 ounces (3 kg).

G. The point of the striker shall have an included angle of 60 degrees, a cone height of 1.5 inches (3.8 cm), a tip radius of 0.02 inch (standard 0.5 millimeter radius) and a minimum hardness of 60 Rockwell, C scale.

H. The rigid mount for the penetration test headform shall be as described in §1116.J.

AUTHORITY NOTE: Promulgated in accordance with R.S. 32:190.

HISTORICAL NOTE: Promulgated by the Department of Public Safety and Corrections, Office of State Police, LR 27:65 (January 2001).

§1118. Retention System Test

A. The retention system test shall be conducted by applying a static tensile load to the retention assembly of a complete helmet, which is mounted, as described in §1114, on a stationary test headform as shown in §1131.E.Figure 4, and by measuring the movement of the adjustable portion of the retention system test device under tension.

B. The retention system test device shall consist of both an adjustable loading mechanism by which a static tensile load can be applied to the helmet retention assembly as a means for holding the test headform and helmet stationary. The retention assembly shall be fastened around two freely moving rollers, both of which shall have a 0.5 inch (1.3 cm) diameter and a 3 inch (7.6 cm) center-to-center separation, and which shall be mounted on the adjustable portion of the tensile loading device (Figure 4). The helmet shall be fixed on the test headform as necessary to ensure that it will not move during the application of the test loads to the retention assembly.

C. A 50-pound (22.7 kg) preliminary test load shall be applied to the retention assembly, normal to the basic plane of the test headform and symmetrical with respect to the center of the retention assembly for 30 seconds, and the maximum distance from the extremity of the adjustable portion of the retention system test device to the apex of the helmet shall be measured.

D. An additional 250-pound (113.4 kg) test load shall be applied to the retention assembly, in the same manner and at the same location as described in §1118.C, for 120 seconds, and the maximum distance from the extremity of the adjustable portion of the retention system test device to the apex of the helmet shall be measured.

AUTHORITY NOTE: Promulgated in accordance with R.S. 32:190.

HISTORICAL NOTE: Promulgated by the Department of Public Safety and Corrections, Office of State Police, LR 27:65 (January 2001).

Subchapter B. Motorcycle Goggles and Safety Glasses

§1119. Purposes and Scope

A. Purpose. To provide manufacturers of motorcycle goggles and safety glasses with equipment approval guidelines for motorcyclist's eye protection devices through the development of a regulation to provide a reasonable degree of protection against tearing and against foreign objects striking or lodging in the eye, causing eye irritation or damage, distracting or handicapping the operator, and thereby causing accidents.

B. Scope. The scope of this regulation shall include requirements for material, lens size, optical properties, strength, field of vision, flammability, cleaning capabilities, labeling, identification, and testing procedures for eye protection devices for drivers and passengers of motorcycles.

1. Windshields are the subject of other nationally recognized standards and shall not be included within the scope of this regulation.

2. Contact lenses are not acceptable as eye protection devices and shall not be included within the scope of this regulation.

AUTHORITY NOTE: Promulgated in accordance with R.S. 32:190.

HISTORICAL NOTE: Promulgated by the Department of Public Safety and Corrections, Office of State Police, LR 27:65 (January 2001).

§1120. Definitions

EPD—eye protection devices.

Eye Glasses—includes devices such as spectacles or sunglasses worn before the eyes having two separately mounted lenses.

Face Shield—a device attached to a helmet or head band(s) which covers the wearer's eyes and face at least to a point approximately to the tip of the nose.

Frame—those parts of the eye glasses or goggles containing the lens housing. Padding may be associated with the frame.

Goggles—a device worn before the eyes, the predominant function of which shall be to protect the eyes without obstructing peripheral vision. They shall provide protection from the front and sides and may or may not form a complete seal with the face.

Headband—that part of the device consisting of a supporting band or other structure that either encircles the head or protective helmet, or can be attached thereto.

Mid-Signal Plane—the anteroposterior plane through the longitudinal axis of the body.

AUTHORITY NOTE: Promulgated in accordance with R.S. 32:190.

HISTORICAL NOTE: Promulgated by the Department of Public Safety and Corrections, Office of State Police, LR 27:65 (January 2001).

§1121. Eye Protection Devices

A. To be considered an EPD, under these regulations, a device must be one of the following:

1. goggles;

2. face shield;

3. eye glasses:

a. each lens shall have a convex frontal surface;

b. each lens shall have a minimum area of 3 square inches. The horizontal diameter (or side-to-side measurement) shall be no less than 2 inches. The vertical

diameter (or top-to-bottom measurement) shall be no less than 1 1/2 inches. A diameter shall pass through a point on the lens that is intended to be directly in front of the pupil of the eye when the wearer is looking straight ahead.

B. Optical correction of a person's vision, where required or desired, may be provided either by:

1. an EPD that provides the proper optical correction; or

2. personal corrective lenses worn under an EPD that does not disturb the adjustment of those lenses.

AUTHORITY NOTE: Promulgated in accordance with R.S. 32:190.

HISTORICAL NOTE: Promulgated by the Department of Public Safety and Corrections, Office of State Police, LR 27:66 (January 2001).

§1122. Materials

A. All parts of an EPD shall be free from sharp edges or projections that could cause harm or discomfort to the wearer.

B. A headband shall be capable of holding the EPD securely under normal operating conditions. It shall be capable of easy adjustment and replacement.

C. Material(s) utilized in any portion of an EPD shall be of durable quality; i.e., material characteristics shall not undergo appreciable alterations under the influence of ageing or of the circumstances of use to which the device is normally subjected (exposure to rain, sun, cold, dust, vibrations, contact of the skin, effects of sweat, or of products applied to skin or hair).

D. Material(s) commonly known to cause skin irritation or disease shall not be used for those parts of the device which come into contact with the skin.

AUTHORITY NOTE: Promulgated in accordance with R.S. 32:190.

HISTORICAL NOTE: Promulgated by the Department of Public Safety and Corrections, Office of State Police, LR 27:66 (January 2001).

§1123. Optical Properties of Eye Protection Devices

A. Lenses of EPD's shall comply with the following requirements.

1. Lenses shall be made of material suitable for ophthalmic use, and shall be free from striae, waves, bubbles, or any other defects which may impair their optical quality.

2. The prismatic effect of a non-corrective lens shall not exceed 1/8 diopter at any point within the specified minimum field of vision. In the case of eye glasses, each non-corrective lens shall comply with the limitation of prismatic effect.

3. In any meridian, the refractive power of a non-corrective lens shall not exceed plus or minus 1/3 diopter and the difference between the refractive powers in any two meridians shall not exceed 1/8 diopter.

4. The definition afforded by a non-corrective lens shall be such that a line pattern with lines separated not more than 24 seconds of angle shall be clearly distinguishable when viewed through the lens.

B. The compliance of a lens with the prismatic effects, refractive power, and definition requirements §1123.A.2, 3 and 4 herein above, shall be determined in accordance with those tests methods described in the American National Standards Institute Standard Z87.1-1989. In order to maintain consistency in the results of tests conducted by various organizations, the following test requirements must be met.

1. An 8-power telescope with focusing arrangement to accommodate the refractive effects of both positive (converging) and negative (diverging) lenses placed between the telescope and test chart shall be used. The illuminated target and test chart shall be a central dot and a concentric circle one inch in diameter plus one of the high contrast (black and white) NBS resolution Test Charts dated 1952 and printed on lens resolution charts to accompany NBS Circular 374. The chart shall be perpendicularly aligned 35 feet from the objective lens of the telescope when the telescope is properly focused with no test, sample, or other lens between the objective lens and the chart. The center dot and the periphery of the concentric circle 1 inch in diameter shall be used when testing for prismatic effect. The test pattern marked "20" shall be used when testing for refractive power and when testing for definition. Standard lenses of plus or minus 1/8 diopter shall be used when testing for refractive power.

2. Other standard methods of testing that are equivalent or superior, as regards to accuracy, quality and consistency of results, to the above specified National Bureau of Standards methods, may be used to determine compliance only when such methods are approved by the Deputy Secretary, Department of Public Safety and Corrections, Public Safety Services.

C. Minimum Horizontal Field of Vision. Except as provided in §1123.C.1 below, each EPD shall not obstruct a horizontal field of vision to at least 105 degrees to the right side of the sagital plane that passes through the pupil of the right eye, and at least 105 degrees to the left side of the sagital plane that passes the pupil of the left eye.

1. The specified minimum horizontal field of vision shall be unobstructed except that the horizontal field provided by spectacles or sunglasses may be obstructed by the frame in a sector no greater than 7 1/2 degrees in horizontal angular width and located between 50 degrees and 80 degrees of the pertinent sagital plane passing through the eye pupil.

2. When ascertaining the horizontal filed of vision afforded by eye glasses, the pupil of the eye shall be assumed to be located 17 millimeters behind the point on the rear surface of the lens where the horizontal and vertical diameters intersect. When ascertaining the horizontal field of vision of EPD's other than eye glasses, the assumed location of the pupil of the eye relative to the structures of the EPD

shall be that location which is most likely to occur when the EPD is attached and worn in accordance with the manufacturer's instructions.

3. No portion of the minimum horizontal field of vision shall be obstructed by a temple piece, headband, helmet, helmet attaching device, or any other supporting attaching device.

AUTHORITY NOTE: Promulgated in accordance with R.S. 32:190.

HISTORICAL NOTE: Promulgated by the Department of Public Safety and Corrections, Office of State Police, LR 27:66 (January 2001).

§1124. Light Transmittance of Eye Protection Devices

A. Clear. A clear EPD is a device which transmits not less than 85 percent of the incident visible radiation.

B. Tinted. A tinted EPD is a device which transmits less than 85 percent of the incident visible radiation but no less than 20 percent.

1. A tinted EPD shall not impair the wearer's ability to discern color.

2. A tinted EPD shall not be used at night.

C. Luminous Transmittance test

1. Clear EPD. The standard source of all radiant energy used in the measurement of luminous transmittance shall be a projection-type No. T-8 (or other high-powered gas filled tungsten filament incandescent lamp) operated at the color temperature corresponding to CIE Source A.

2. Tinted EPD. The standard source of all radiant energy used in the measurement of luminous transmittance for tinted EPD's shall be CIE Source C.

D. The luminous transmittance of both clear and tinted EPD's shall be determined by one of the following means and by utilizing the applicable light source.

1. Photometrically by an observer having normal color vision, as determined by recognized color vision chart tests such as those employing pseudo-isochromatic plates.

2. With a physical photometer consisting of a thermopile (or other radiometer) and a luminosity solution having a special transmittance curve which coincides closely with the luminous efficiency curve of the average eye.

3. By measuring the spectral transmittance and calculating the luminous transmittance through the use of published data on the spectral radiant energy of CIE Source A for clear EPD's and CIE Source C for tinted EPD's and the relative luminous efficiency of the average eye.

AUTHORITY NOTE: Promulgated in accordance with R.S. 32:190.

HISTORICAL NOTE: Promulgated by the Department of Public Safety and Corrections, Office of State Police, LR 27:67 (January 2001).

§1125. Lens Strength-Testing Procedure for Eye Protection Devices

A. Helmet mounted face shields shall be tested while attached to a helmet and mounted on a human head form as herein defined. An EPD not designed to be attached to a helmet shall be tested on the same type of head form and shall be located in a position simulating its position in actual use.

B. The human head form used for testing both the helmet mounted face shield and the other EPD's herein defined shall be an "Anthropomorphic Head Assembly SA 150 M010" as defined in the National Highway Traffic Safety Administration's Standard 572, "Anthropomorphic Test Dummies". The head form needs to have only those features necessary to test EPD's which shall include size, facial features, and covering material.

C. A steel projectile 3/8" in diameter, weighing 1.56 ounces, approximately 2 1/2" long with a conical point of 90 degree included angle, the point having a spherical radius no greater than 0.020" and a hardness of 60 (+10) on the Rockwell C scale, shall be freely dropped from a height of 14 feet above the EPD. The projectile may be guided, but not restricted, in its vertical fall by dropping it through a tube extending to within approximately 4" of the impact area. The impact area must be on the forward optical surface and within a 1" diameter circle centered over the eye opening. The impact point shall be perpendicular to a plane tangent to the impact area.

D. Cracking and piercing of the EPD is permissible provided that the projectile does not pass through or remain lodged in the lens, but is repulsed by the EPD. No lens shall become dislodged nor shall any particles of the EPD break loose from any eyeward surface of the EPD.

E. Tests shall be performed at EPD temperatures of 0° and 110°F. Tests shall be performed at 10 percent and 90 percent relative humidities for all temperatures in excess 70°F. The EPD shall be conditioned in the specified environment for a minimum of four hours, removed, and tested within five seconds.

AUTHORITY NOTE: Promulgated in accordance with R.S. 32:190.

HISTORICAL NOTE: Promulgated by the Department of Public Safety and Corrections, Office of State Police, LR 27:67 (January 2001).

§1126. Flammability Test—Plastics Only

A. Where plastic materials are used in an EPD, such materials shall be non-combustible or slow-burning. Such plastic items shall be exposed to a test to determine the flame-propagation rate. The specimen shall be ignited by holding one end of specimen horizontally at the top of a luminous 3/4" Bunsen burner flame in a draft-free room. The rate of propagation of burning, after removing the flame from the specimen, determined by a stop watch shall be 1" or less per 20 seconds. A faster rate of propagation shall be cause for rejection.

AUTHORITY NOTE: Promulgated in accordance with R.S. 32:190.

HISTORICAL NOTE: Promulgated by the Department of Public Safety and Corrections, Office of State Police, LR 27:67 (January 2001).

§1127. Care and Cleansing

A. All EPD materials shall be such as to withstand, without visible deterioration, washing in ordinary household detergents and warm water, and rinsing to remove visible traces of detergents. The manufacturer shall provide with each EPD a notice setting forth proper care and cleansing instructions.

AUTHORITY NOTE: Promulgated in accordance with R.S. 32:190.

HISTORICAL NOTE: Promulgated by the Department of Public Safety and Corrections, Office of State Police, LR 27:68 (January 2001).

§1128. Identificationand Labeling Eye Protection Devices

A. Eye protection devices, manufactured to comply with the requirements of these regulations, shall be identified and labeled as follows.

1. The following information shall be permanently marked on the structure and on each lens of the EPD in a manner not to interfere with the vision of the wearer:

a. that the device meets §1125 of these regulations;

b. the manufacturer's or distributor's trade name and model name or number, which shall correspond with the name and number under which the device has been approved or certified. On the lens itself, the manufacturer's identifying monogram or symbol shall be sufficient;

c. on an tinted EPD, the wording "day use only" shall appear.

B. The information required under §1128.A.1 plus the corporate or business name and address of either the actual manufacturer or marketer assuming the responsibilities of the manufacturer shall be imprinted on the container in which the EPD is packed and on any instruction sheet(s) pertaining to the EPD.

C. The following statement shall appear in a prominent location on the container or label accompanying each tinted eye protection device: The tinted eye protection device is for daytime use only. Words of equivalent meaning may be substituted.

AUTHORITY NOTE: Promulgated in accordance with R.S. 32:190.

HISTORICAL NOTE: Promulgated by the Department of Public Safety and Corrections, Office of State Police, LR 27:68 (January 2001).

§1131. Appendices

A. Table 1—Weights for Impact Attenuation Test Drop Assembly

Test Headform Size	Weight [1] -1b(kg)
Small	7.8 (3.5 kg).
Medium	11.0 (5.0 kg).
Large	13.4 (6.1 kg).

[1]Combined weight of instrumented test headform and supporting assembly for drop test.

B. Figure 1. Basic Plane

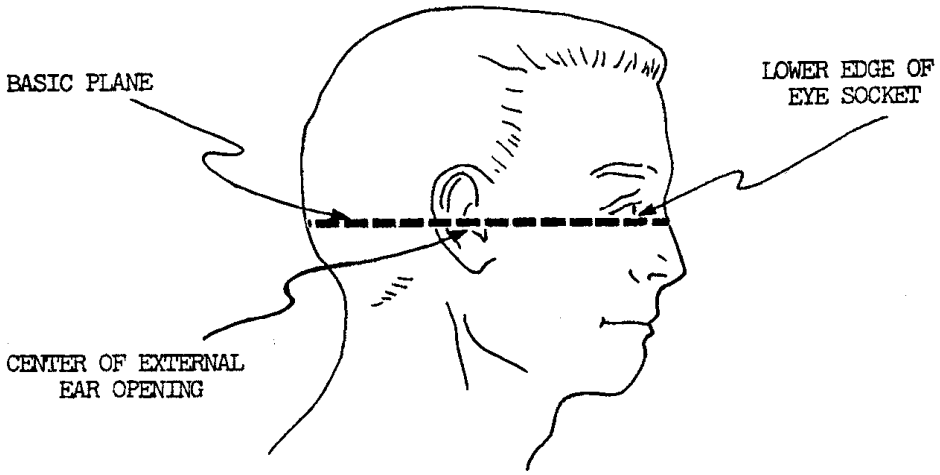

Figure 1

C. Figure 2. Test Form

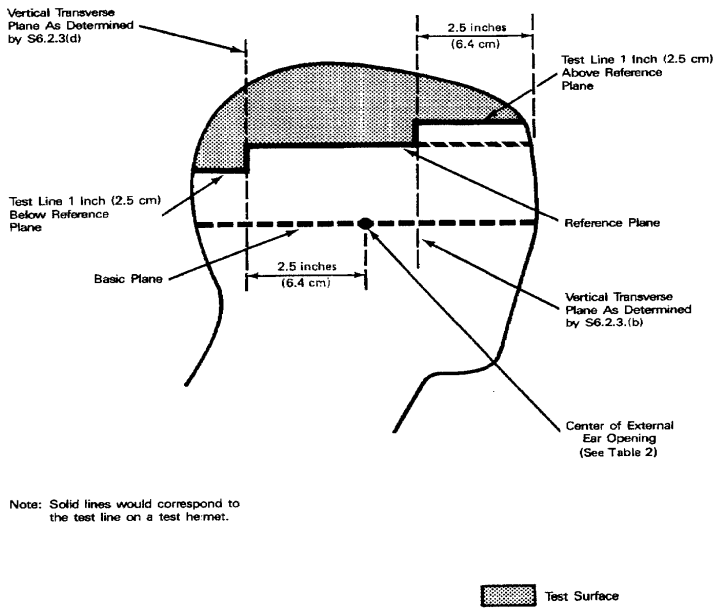

Figure 2

D. Figure 3. Mid-Sagittal Plane

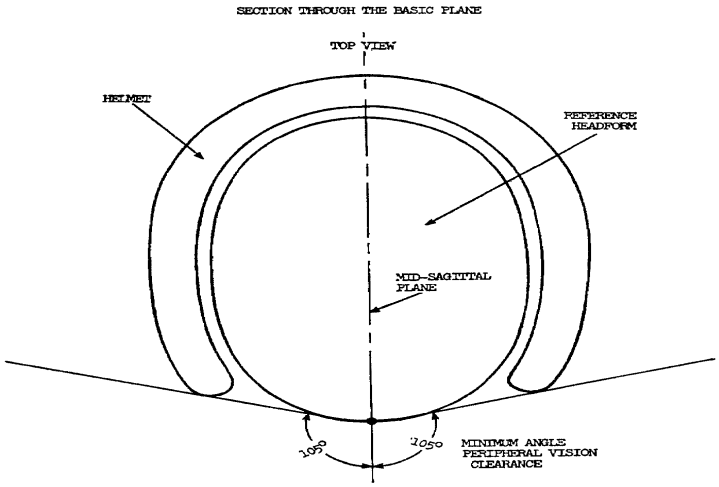

Figure 3

E. Figure 4. Test Headform

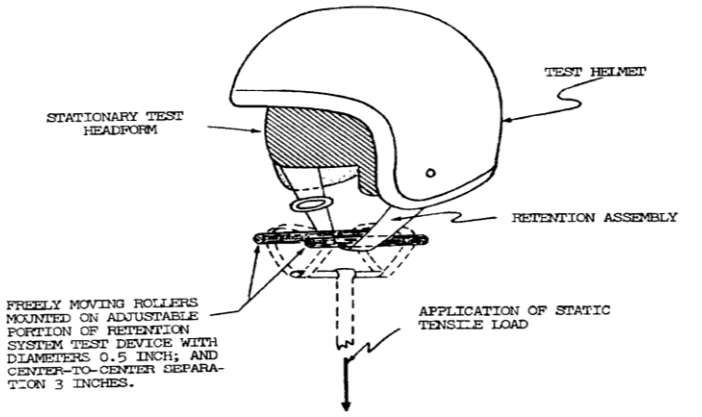

RETENTION SYSTEM TEST DEVICE

Figure 4

F. Figure 5. Headform Sections

Figure 5

HEADFORM SECTIONS

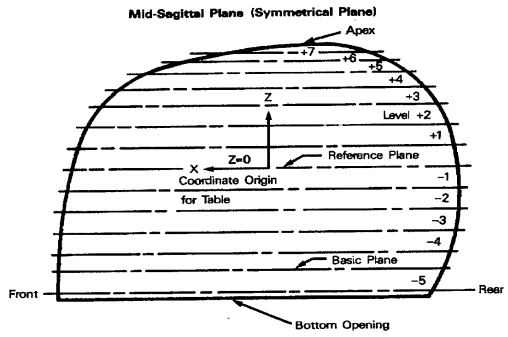

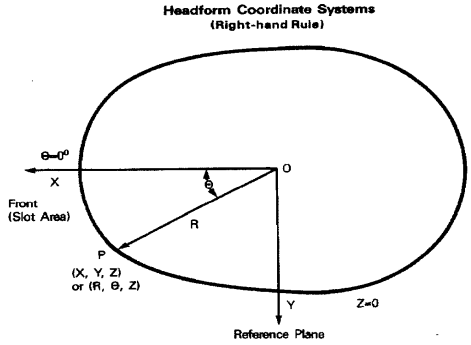

G. Table 2. Medium Headform - Exterior Dimensions

Table 2

Medium Headform — Exterior Dimensions

	Bottom Opening Z= −3.02			Level—5 Z= −2.900		
θ	R	X	Y	R	X	Y
0	4.292	4.292	0	4.293	4.293	0
10	4.266	4.201	0.741	4.270	4.206	0.742
20	4.159	3.908	1.423	4.172	3.920	1.427
30	3.967	3.436	1.984	3.961	3.430	1.981
40	3.660	2.804	2.353	3.670	2.811	2.359
50	3.332	2.142	2.553	3.352	2.155	2.568
60	3.039	1.520	2.632	3.067	1.534	2.656
70	2.839	0.971	2.668	2.869	0.981	2.696
80	2.720	0.472	2.679	2.772	0.481	2.730
90	2.675	0	2.675	2.709	0	2.709
100	2.703	−0.469	2.662	2.724	−0.473	2.683
110	2.764	−0.945	2.597	2.794	−0.956	2.626
120	2.888	−1.444	2.501	2.917	−1.459	2.526
130	2.985	−1.919	2.287	3.040	−1.954	2.329
140	3.100	−2.375	1.993	3.175	−2.432	2.041
150	3.175	−2.750	1.588	3.232	−2.799	1.616
160	3.186	−2.994	1.090	3.246	−3.050	1.110
170	3.177	−3.129	0.552	3.237	−3.188	0.562
180	3.187	−3.187	0	3.246	−3.246	0

	Basic Plane Z= −2.360			Level—4 Z= −2.000		
θ	R	X	Y	R	X	Y
0	4.272	4.272	0	4.247	4.247	0
10	4.248	4.184	0.738	4.223	4.159	0.733
20	4.147	3.897	1.418	4.120	3.872	1.409
30	3.961	3.430	1.981	3.940	3.412	1.970
40	3.687	2.824	2.370	3.683	2.821	2.367
50	3.384	2.175	2.592	3.392	2.180	2.598
60	3.111	1.556	2.694	3.132	1.566	2.712
70	2.927	1.001	2.751	2.960	1.012	2.782
80	2.815	0.489	2.772	2.860	0.497	2.817
90	2.779	0	2.779	2.838	0	2.838
100	2.802	−0.487	2.759	2.861	−0.497	2.818
110	2.887	−0.987	2.713	2.958	−1.012	2.780
120	3.019	−1.510	2.615	3.098	−1.549	2.683
130	3.180	−2.044	2.436	3.260	−2.096	2.497
140	3.306	−2.533	2.125	3.405	−2.608	2.189
150	3.398	−2.943	1.699	3.516	−3.045	1.758
160	3.458	−3.250	1.183	3.585	−3.369	1.228
170	3.475	−3.422	0.603	3.612	−3.557	0.627
180	3.472	−3.472	0	3.609	−3.609	0

H. Table 2. Medium Headform—Exterior Dimensions (Continued)

Table 2

Medium Headform—Exterior Dimensions (Continued)

	Level—3 Z= −1.500			Level—2 Z= −1.000		
θ	R	X	Y	R	X	Y
0	4.208	4.208	0	4.148	4.148	0
10	4.179	4.116	0.726	4.112	4.050	0.714
20	4.075	3.829	1.394	4.013	3.771	1.373
30	3.902	3.379	1.951	3.844	3.329	1.922
40	3.654	2.799	2.349	3.609	2.765	2.320
50	3.377	2.171	2.587	3.352	2.155	2.568
60	3.094	1.547	2.680	3.137	1.569	2.717
70	2.982	1.020	2.802	2.989	1.022	2.809
80	2.891	0.502	2.847	2.902	0.504	2.858
90	2.876	0	2.876	2.884	0	2.884
100	2.918	−0.507	2.874	2.943	−0.511	2.898
110	3.021	−1.033	2.839	3.052	−1.044	2.868
120	3.170	−1.585	2.745	3.225	−1.613	2.793
130	3.337	−2.145	2.556	3.397	−2.184	2.602
140	3.483	−2.668	2.239	3.536	−2.709	2.273
150	3.604	−3.121	1.802	3.657	−3.167	1.829
160	3.682	−3.460	1.259	3.751	−3.525	1.283
170	3.725	−3.668	0.647	3.807	−3.749	0.661
180	3.741	−3.741	0	3.822	−3.822	0

	Level—1 Z= −0.500			Reference Plane Z=0.0		
θ	R	X	Y	R	X	Y
0	4.067	4.067	0	3.971	3.971	0
10	4.033	3.972	0.700	3.935	3.875	0.683
20	3.944	3.706	1.349	3.853	3.621	1.318
30	3.777	3.271	1.889	3.701	3.205	1.851
40	3.552	2.721	2.283	3.491	2.674	2.244
50	3.323	2.136	2.546	3.279	2.108	2.512
60	3.126	1.563	2.707	3.101	1.551	2.686
70	2.987	1.022	2.807	2.979	1.019	2.799
80	2.912	0.506	2.868	2.910	0.505	2.866
90	2.893	0	2.893	2.890	0	2.890
100	2.896	−0.503	2.861	2.945	−0.511	2.900
110	3.064	−1.048	2.879	3.062	−1.047	2.877
120	3.231	−1.616	2.798	3.228	−1.614	2.796
130	3.411	−2.193	2.613	3.413	−2.194	2.615
140	3.560	−2.727	2.288	3.563	−2.729	2.290
150	3.682	−3.189	1.841	3.681	−3.188	1.841
160	3.783	−3.555	1.294	3.773	−3.546	1.290
170	3.865	−3.826	0.675	3.832	−3.774	0.665
180	3.857	−3.857	0	3.844	−3.844	0

I. Table 2. Medium Headform—Exterior Dimensions (Continued)

Table 2

Medium Headform — Exterior Dimensions (Continued)

	Level+1 Z= 0.500			Level +2 Z=1.000		
θ	R	X	Y	R	X	Y
0	3.830	3.830	0	3.665	3.665	0
10	3.801	3.743	0.660	3.613	3.558	0.627
20	3.725	3.500	1.274	3.554	3.340	1.216
30	3.587	3.106	1.794	3.436	2.976	1.718
40	3.399	2.604	2.185	3.271	2.506	2.103
50	3.205	2.060	2.455	3.102	1.994	2.376
60	3.044	1.522	2.636	2.959	1.480	2.563
70	2.927	1.001	2.751	2.854	0.976	2.682
80	2.861	0.497	2.818	2.792	0.485	2.750
90	2.855	0	2.855	2.783	0	2.783
100	2.897	−0.503	2.853	2.832	−0.492	2.789
110	3.007	−1.029	2.826	2.938	−1.005	2.761
120	3.176	−1.588	2.751	3.102	−1.551	2.686
130	3.372	−2.168	2.583	3.294	−2.117	2.523
140	3.520	−2.697	2.263	3.450	−2.643	2.218
150	3.643	−3.155	1.822	3.564	−3.087	1.782
160	3.728	−3.503	1.275	3.637	−3.418	1.244
170	3.777	−3.720	0.656	3.675	−3.619	0.638
180	3.782	−3.782	0	3.670	−3.670	0

	Level +3 Z=1.460			Level +4 Z=1.860		
θ	R	X	Y	R	X	Y
0	3.419	3.419	0	3.061	3.061	0
10	3.382	3.331	0.587	3.035	2.989	0.527
20	3.299	3.100	1.128	2.966	2.787	1.014
30	3.197	2.769	1.599	2.872	2.487	1.436
40	3.052	2.338	1.962	2.754	2.110	1.770
50	2.911	1.871	2.230	2.642	1.698	2.024
60	2.786	1.393	2.413	2.522	1.261	2.184
70	2.700	0.924	2.537	2.477	0.847	2.328
80	2.647	0.460	2.607	2.442	0.424	2.405
90	2.636	0	2.636	2.442	0	2.442
100	2.691	−0.467	2.650	2.492	−0.433	2.454
110	2.796	−0.956	2.627	2.599	−0.889	2.442
120	2.961	−1.481	2.564	2.758	−1.379	2.389
130	3.147	−2.023	2.411	2.936	−1.887	2.249
140	3.301	−2.529	2.122	3.081	−2.360	1.980
150	3.408	−2.951	1.704	3.176	−2.751	1.588
160	3.479	−3.289	1.190	3.230	−3.035	1.105
170	3.514	−3.461	0.610	3.270	−3.220	0.568
180	3.502	−3.502	0	3.271	−3.271	0

J. Table 2. Medium Headform—Exterior Dimensions (Continued)

Table 2

Medium Headform — Exterior Dimensions (Continued)

	Level +5 Z=2.250			Level +6 Z=2.560		
θ	R	X	Y	R	X	Y
0	2.526	2.526	0	1.798	1.798	0
10	2.521	2.483	0.483	1.798	1.771	0.312
20	2.464	2.315	0.843	1.757	1.651	0.601
30	2.387	2.067	1.194	1.719	1.489	0.860
40	2.305	1.766	1.482	1.678	1.285	1.079
50	2.232	1.435	1.710	1.652	1.062	1.266
60	2.174	1.087	1.883	1.641	0.821	1.421
70	2.144	0.733	2.015	1.645	0.563	1.546
80	2.132	0.370	2.100	1.673	0.291	1.648
90	2.147	0	2.147	1.712	0	1.712
100	2.213	−0.384	2.179	1.809	−0.314	1.782
110	2.316	−0.792	2.176	1.925	−0.658	1.809
120	2.463	−1.232	2.133	2.066	−1.033	1.789
130	2.624	−1.687	2.010	2.213	−1.423	1.695
140	2.763	−2.117	1.776	2.358	−1.806	1.516
150	2.863	−2.479	1.432	2.469	−2.138	1.235
160	2.919	−2.743	0.988	2.536	−2.383	0.867
170	2.954	−2.909	0.513	2.561	−2.522	0.445
180	2.958	−2.958	0	2.556	−2.556	0

	Level +7 Z=2.750		
θ	R	X	Y
0	1.081	1.081	0
10	1.088	1.072	0.189
20	1.055	0.991	0.361
30	1.039	0.900	0.520
40	1.039	0.796	0.668
50	1.052	0.676	0.806
60	1.068	0.534	0.925
70	1.106	0.378	1.039
80	1.171	0.203	1.153
90	1.242	0	1.242
100	1.422	−0.247	1.400
110	1.489	−0.509	1.399
120	1.683	−0.842	1.458
130	1.801	−1.158	1.380
140	1.954	−1.497	1.256
150	2.083	−1.804	1.042
160	2.138	−2.009	0.731
170	2.175	−2.142	0.378
180	2.175	−2.175	0

Notes:

1. Apex is located at (-0.75, 0, 3.02) for (X,Y,Z) or (0.75, 180, 3.02) for (R, θ, Z).
2. Center of ear opening is located at (0.40, 2.78, -2.36) for (X,Y,Z) or (2.80, 81.8, -2.36) for (R,θ,Z).
3. Scale all dimensions by 0.8941 for small headform.
4. Scale all dimensions by 1.069 for large headform.
5. Headform is symmetrical about the mid-sagittal plane.
6. Units:
   R,X,Y,Z — inches.
   θ — degrees.
7. To obtain metric equivalents in centimeters, multiply each figure by 2.54.

K. Figure 6. Small Headform—Interior Design

Figure 6

Small Headform — Interior Design

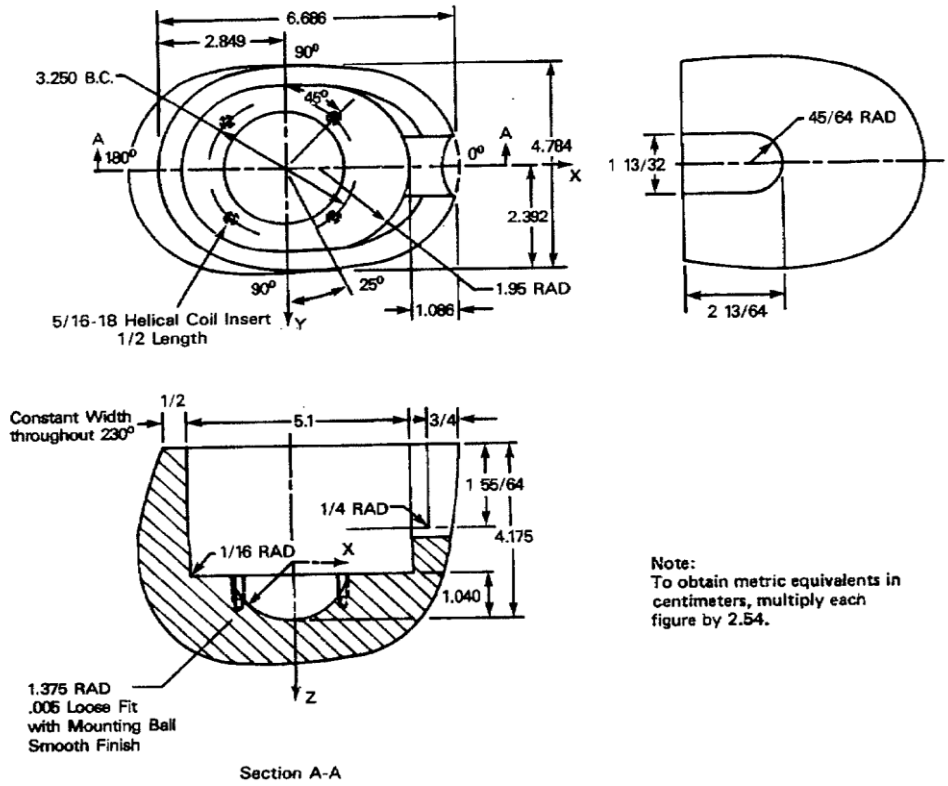

Note:
To obtain metric equivalents in centimeters, multiply each figure by 2.54.

L. Figure 7. Medium Headform—Interior Design

Figure 7

Medium Headform — Interior Design

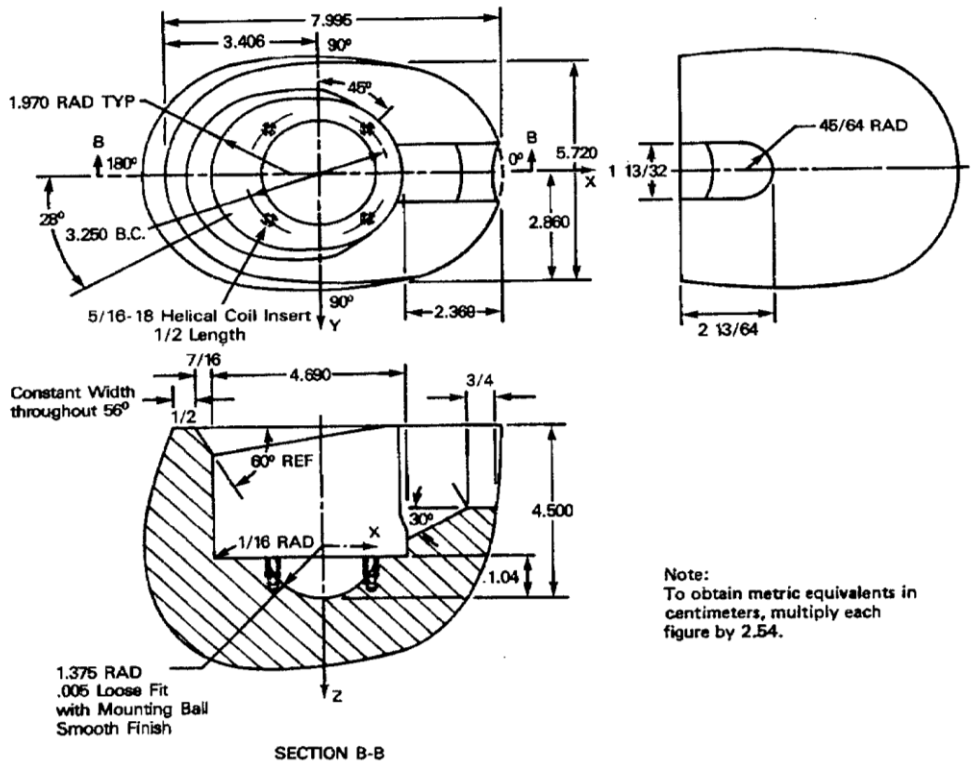

Note:
To obtain metric equivalents in centimeters, multiply each figure by 2.54.

M. Figure 8. Large Headform—Interior Design

Figure 8

Large Headform — Interior Design

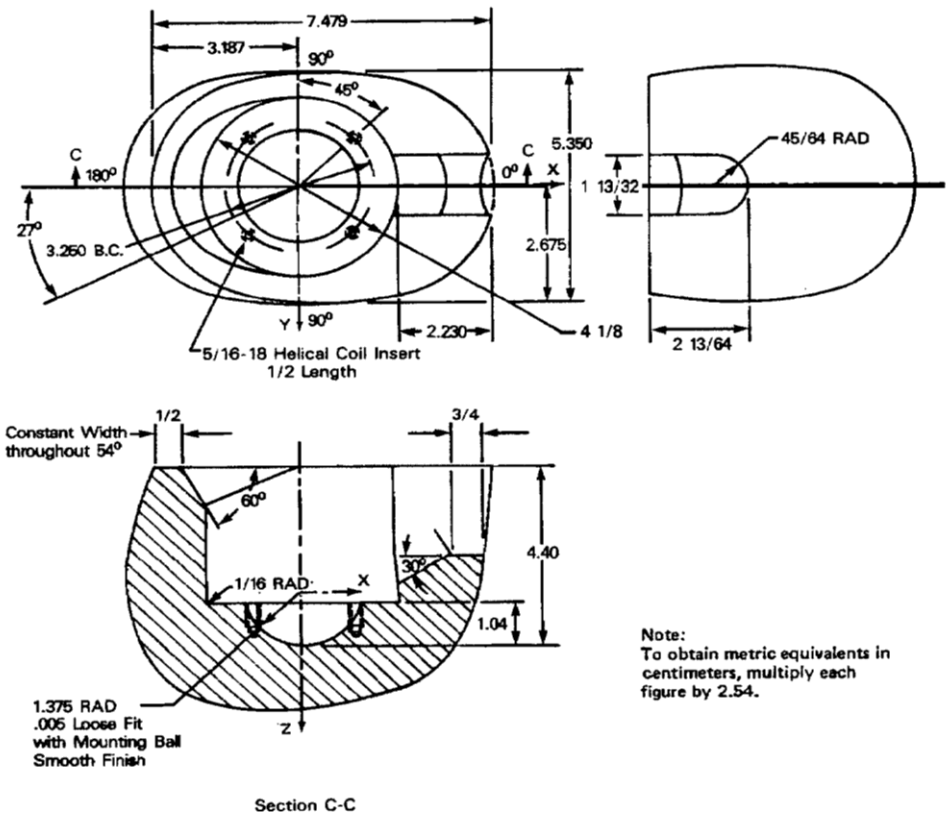

Note:
To obtain metric equivalents in centimeters, multiply each figure by 2.54.

[38 FR 22391, Aug. 20, 1973, as amended at 39 FR 3554, Jan. 28, 1974; 45 FR 15181, Mar. 10, 1980; 53 FR 11288, Apr. 6, 1988; 53 FR 12529, Apr. 15, 1988]

AUTHORITY NOTE: Promulgated in accordance with R.S. 32:190.

HISTORICAL NOTE: Promulgated by the Department of Public Safety and Corrections, Office of State Police, LR 27:68 (January 2001).

Chapter 13. Vehicle Certificates

Subchapter A. Certificates of Title

§1301. Name Usage on Vehicle Certificates of Title

A. The applicant's name on a title application may be shown as written on the bill of sale, invoice or reverse side of title or certificate of origin.

B. If the name is different on more than one document (title, invoice, etc.) applicant may use whichever name indicated on documents he/she desires.

C. The name as mortgagor on the chattel mortgage must correspond with the name on title application.

D. No titles or ranks will be used as prefixes or suffixes to names such as: Dr., M.D., Ph.D., Col., Mr., Mrs., or Ms.

E. Suffixes such as Sr., Jr., II, III, etc., may be used when it is a part of the legal name.

F. Commas, periods, quotation marks, slashes, and hyphens will not be allowed in any name.

G. When two names are used, the second name must begin with the complete first name of the second person.

H. In care of (c/o) will not be allowed in name.

I. Last names such as Mac Donald must be entered on application without spaces.

J. A middle initial (when one exists) is required when the last name is Son or Sons. Example: Diane E. Son or William L. Sons.

K. An abbreviated form of a name will be required when there are 28 characters or more in the name.

AUTHORITY NOTE: Promulgated in accordance with R.S. 32:727(A).
HISTORICAL NOTE: Promulgated by the Department of Public Safety, Office of Motor Vehicles, LR 11:781 (August 1985).

Subchapter B. Salvaged, Junked or Total Loss Vehicle Certificates of Title

§1331. Definition

Total Loss—when used in these rules and in R.S. 32:707 shall mean a motor vehicle which has sustained damages equivalent to 75 percent or more of the market value as determined by the most current (NADA) National Automobile Dealers Association Handbook.

AUTHORITY NOTE: Promulgated in accordance with R.S. 32:707.
HISTORICAL NOTE: Promulgated by the Department of Public Safety, Office of Motor Vehicles, LR 11:560 (May 1985).

§1333. Issuance

A. Vehicles stolen and recovered without damage will not be issued a certificate of salvage. On a total loss due to theft, the certificate of title will be assigned from registered owner to insurance company and reassigned to buyer.

B. Stolen vehicles recovered as a total loss due to extensive damage will be sold with a certificate of salvage.

C. When title is re-issued on a rebuilt salvage vehicle whether in-state vehicle or out-of-state vehicle the words "Reconstructed Vehicle" rather than PCV code letters will be on face of title.

D. As extenuating circumstances arise, the insurance companies and authorized agents will be allowed more than 10 days to submit the title to the Office of Motor Vehicles so that title can be obtained from lienholders and company/agent is given enough time to dispose of vehicle and submit the title along with the executed certificate of salvage.

E. A certificate of origin cannot be accepted with a salvage certificate. The vehicle must be registered and taxes paid.

AUTHORITY NOTE: Promulgated in accordance with R.S. 32:707.
HISTORICAL NOTE: Promulgated by the Department of Public Safety and Corrections, Office of Motor Vehicles, LR 11:560 (May 1985).

§1335. Procedures

A. If the owner of any vehicle sells, transfers as scrap or permanently dismantles, damages or destroys beyond repair or otherwise made permanently unusable as a vehicle, and there is no settlement with an insurance company on the basis of a total loss, the owner must send the title and license plate to the Office of Motor Vehicles.

B. When an insurance company as a result of having paid a total loss claim acquires a certificate of title to a vehicle and obtains possession or control of the vehicle for any cause other than theft, such company or its authorized representative must send the title and license plate to the Office of Motor Vehicles along with a copy of certificate of salvage issued to buyer.

C. If an insurance company has acquired a certificate of title to a vehicle and obtains possession of the vehicle in settlement of a theft total loss claim, upon recovery of the vehicle it is determined that the vehicle has been damaged to an extent that it would be considered a total loss, such insurance company or its authorized representative must send the title and license plate to the Office of Motor Vehicles along with a copy of certificate of salvage issued in the name of the buyer of the vehicle.

D. Whenever any vehicle, is acquired, either from in state or from another state, and the vehicle purchased is salvage, or to be dismantled, the purchaser must send the title and license plate to the Office of Motor Vehicles. However, if the seller has complied with those requirements, and the new purchaser has in his possession a non-negotiable receipt for a salvage vehicle, no further requirements are necessary.

AUTHORITY NOTE: Promulgated in accordance with R.S. 32:707.
HISTORICAL NOTE: Promulgated by the Department of Public Safety and Corrections, Office of Motor Vehicles, LR 11:560 (May 1985).

§1337. Procedures to Follow When a Junked Vehicle Is Sold to Another Party

A. Assign the non-negotiable receipt for salvage vehicle (certificate of salvage) on the reverse side to the purchaser.

B. Purchaser must retain non-negotiable receipt at the office or location where vehicle is maintained.

NOTE: Vehicle must be registered, titled and taxes paid by the purchaser of a salvage vehicle when purchaser is not a licensed dealer.

AUTHORITY NOTE: Promulgated in accordance with R.S. 32:707.

HISTORICAL NOTE: Promulgated by the Department of Public Safety and Corrections, Office of Motor Vehicles, LR 11:560 (May 1985).

§1339. Certificate of Salvage Form Instructions

A. The certificate of salvage, Form #DPSMV 1690 must be executed showing all the information requested. The name of the insurance company underwriting the loss or the authorized agent selling the vehicle must be shown in the space provided at the bottom of the form.

B. The Louisiana title or out-of-state title that is being surrendered must be listed on the certificate of salvage form. The title must be properly assigned by the registered owner to the insurance company on reverse side, and if a lien is recorded, it must be released by the recorded license holder.

C. The name and address of the purchaser of the salvage vehicle must be shown in the space provided ("Issued To") at the top of the form.

D. The certificate of salvage, white original, Part 1 must be issued to the buyer and delivered along with the vehicle.

E. The certificate of salvage, Part 2 (yellow copy) must be surrendered in person or by mail along with the title to the:

Office of Motor Vehicles
Box 64886
109 South Foster Dr.
Baton Rouge, LA 70896

F. The certificate of salvage, Part 3 (pink copy) must be retained with the insurance company file.

AUTHORITY NOTE: Promulgated in accordance with R.S. 32:707.

HISTORICAL NOTE: Promulgated by the Department of Public Safety and Corrections, Office of Motor Vehicles, LR 11:560 (May 1985).

Chapter 15. Services Provided by Persons and Business Entities

Subchapter A. Auto Title Companies

§1501. Definitions

Assistant Secretary—assistant secretary of the Office of Motor Vehicles.

Auto Title Company—any person, firm, association, or corporation which is engaged primarily in the transfer and recordation of sales, leases, or mortgages of vehicles including, but not limited to, mobile homes, trailers, and motor vehicles. The term *auto title company* also means any person, firm, association, or corporation which has been licensed in accordance with the provisions of R.S. 32:735 et seq. An auto title company shall not mean an insurance company transferring titles to wrecked vehicles, or a licensed motor vehicle dealer, lending institution, financial institution regulated by state or federal authorities, or a notary, attorney, or individual applicant unless he or it is doing business as an auto title company.

Department—Department of Public Safety and Corrections, Office of Motor Vehicles.

Doing Business as an Auto Title Company—any act by which a person, firm, association, or corporation holds himself or itself out to the public as being engaged in the business of handling transactions involving the transfer and recordation of sales, leases, or mortgages of vehicles including, but not limited to, mobile homes, trailers, and motor vehicles, but does not include an attorney, notary, financial institution, lending institution, or insurance company, unless these entities or persons issue temporary registrations.

Person—includes person, corporation, partnership, limited liability company, firm, association, or other legal entity formed to conduct business.

AUTHORITY NOTE: Promulgated in accordance with R.S. 32:735(B).

HISTORICAL NOTE: Promulgated by the Department of Public Safety and Corrections, Office of Motor Vehicles, LR 24:345 (February 1998).

§1503. Requirement of License

A. Any person who is engaged primarily in the transfer and recordation of sales, leases, or mortgages of vehicles including, but not limited to, mobile homes, trailers, and motor vehicles shall be licensed by the Department of Public Safety and Corrections, Office of Motor Vehicles prior to conducting any business as an auto title company.

B. A person shall not be required to obtain a license as an auto title company if the person is an insurance company transferring titles to wrecked vehicles, a licensed motor vehicle dealer, a lending institution, or a financial institution regulated by state or federal authorities. Additionally, a notary, attorney, or individual shall not be required to obtain a license as an auto title company unless the person is doing business as an auto title company.

AUTHORITY NOTE: Promulgated in accordance with R.S. 32:735(B).

HISTORICAL NOTE: Promulgated by the Department of Public Safety and Corrections, Office of Motor Vehicles, LR 24:345 (February 1998).

§1505. Application Requirements

A. The application for an auto title company shall be on a form approved by the department, and shall require the applicant to provide the following information:

1. the full legal name of the applicant, including any trade names or aliases;

2. the complete physical and mailing addresses for the applicant's principal place of business, as well as for any

location from which the applicant intends to conduct business as an auto title company;

3. the telephone number, including area code, for each place of business or location listed on the application;

4. if the applicant is not a natural person, the full name, complete physical and mailing addresses, and telephone number of a contact person;

5. if the applicant is not a natural person, the full name, complete physical and mailing addresses, and telephone number of all officers, directors, and managers of the applicant;

6. a signed and dated statement by each natural person listed in the application, stating that they are submitting themselves for review by the department to determine if they are persons of good moral character, and that they authorize the department to check their criminal history; and

7. such other information or documentation that the department may require in order to determine the eligibility of the applicant.

AUTHORITY NOTE: Promulgated in accordance with R.S. 32:735(B).

HISTORICAL NOTE: Promulgated by the Department of Public Safety and Corrections, Office of Motor Vehicles, LR 24:345 (February 1998).

§1507. Application Fee

A. The applicant shall pay an annual license fee of $200 for one business location. An annual fee of $50 will be required for each additional business location. The license fee shall be paid by cash, money order, or check, made payable to the Department of Public Safety and Corrections. If payment is made with a check, the check must be written on an account in the same name as the business name.

AUTHORITY NOTE: Promulgated in accordance with R.S. 32:735(B).

HISTORICAL NOTE: Promulgated by the Department of Public Safety and Corrections, Office of Motor Vehicles, LR 24:346 (February 1998).

§1509. Renewal Application

A. Every license issued shall expire on the first day of June following the year in which such license was issued. The license shall be renewed annually at least 60 days in advance of the expiration date of the license by submitting to the Office of Motor Vehicles an application for renewal, together with the license renewal fee and the surety bond continuation certificate for the renewal period.

AUTHORITY NOTE: Promulgated in accordance with R.S. 32:735(B).

HISTORICAL NOTE: Promulgated by the Department of Public Safety and Corrections, Office of Motor Vehicles, LR 24:346 (February 1998).

§1511. Change of Location or Information

A. In the event a licensed auto title company changes its business location, or any information provided on the original application or subsequent renewal application changes, the company shall submit an updated application (DPSMV 1968), an original bond change rider, and the current original auto title company license.

AUTHORITY NOTE: Promulgated in accordance with R.S. 32:735(B).

HISTORICAL NOTE: Promulgated by the Department of Public Safety and Corrections, Office of Motor Vehicles, LR 24:346 (February 1998).

§1513. Change of Ownership

A. As part of its application for a license, an auto title company shall agree, in writing, to the updating requirements of §1513.

B. In the event there is a change in the ownership of an applicant or a licensed auto title company, the applicant or licensee, as the case may be, shall submit an updated application (DPSMV 1968), an original bond change rider, and the current original auto title company license, if issued. If the surety will not issue a bond rider, then a new bond shall be submitted with the application. If a new bond is required, the old bond shall not be canceled until the department approves the ownership change and the new bond. In the event that the old bond is canceled, the surety on the old bond shall remain liable for any claim against the old bond for any transaction handled by the licensee during the effective dates of the old bond. The bonding requirements of §1513 may be altered by the department if the department is satisfied that the state and its citizens are adequately protected from any losses resulting from the acts or omissions attributable to the licensee during the effective dates of the bond.

AUTHORITY NOTE: Promulgated in accordance with R.S. 32:735(B).

HISTORICAL NOTE: Promulgated by the Department of Public Safety and Corrections, Office of Motor Vehicles, LR 24:346 (February 1998).

§1515. Inspections and Audits

A. As part of its application for a license, an auto title company shall agree, in writing, to the audit and inspection requirements of §1515.

B. During the normal working hours of the department, or at any other time the licensee is open for business, employees or agents of the department or of the Department of Revenue shall have the right to inspect and audit any and all records or reports of the auto title company. The records and reports shall be made available immediately on request, unless the records or reports are currently in use, but no later than by the close of business following the day the request for the records was made. In lieu of submitting the original records and reports, the auto title company may submit copies to the person requesting the records and reports, at the auto title company's cost, if the person requesting the records and reports is satisfied with the accuracy of the copies.

C. During the normal working hours of the department, or at any other time the licensee is open for business, employees or agents of the department or of the Department of Revenue shall have the right to inspect the premises of any office of the licensee where auto title business is conducted or where the records and reports of the auto title company are kept.

AUTHORITY NOTE: Promulgated in accordance with R.S. 32:735(B).

HISTORICAL NOTE: Promulgated by the Department of Public Safety and Corrections, Office of Motor Vehicles, LR 24:346 (February 1998).

§1517. License Suspension, Revocation, Cancellation, Nonissuance, or Restrictions

A. The following actions by a licensee or applicant or any of the licensee's or applicant's employees, managers, agents, representatives, officers, directors or owners may subject the licensee or applicant to suspension, revocation, or cancellation of the license by the department or the imposition of license restrictions by the department. Additionally, the department may deny an application and refuse to issue a license for any of the following actions by a licensee or applicant or any of the licensee's or applicant's employees, managers, agents, representatives, officers, directors or owners:

1. failure to remit taxes and fees collected from applicants for title transfers;

2. repeated late filings;

3. operating as an auto title company without a license for each location, with an expired license, or without a valid surety bond on file with the Office of Motor Vehicles;

4.a. the issuance of more than one temporary registration (T-marker) to a title applicant; or

b. the issuing of a T-marker without first collecting all taxes and fees and requiring the title applicant to show proof of compliance with the compulsory insurance law;

5. operating from an unlicensed location;

6. changing the ownership of the auto title company and not reporting, in writing, to the Office of Motor Vehicles within 30 days form the date of such change;

7. changing the officers or directors of the auto title company and not reporting, in writing, to the Office of Motor Vehicles within 30 days from the date of such change;

8. being a principal or accessory to the alteration of documents relevant to a registration or titling transaction that results in material injury to the public records or a shortfall in the collection of taxes owed;

9. the forwarding to the Office of Motor Vehicles by an auto title company of a document relevant to a registration or titling transaction that results in a material injury to the public records, or a shortfall in the collection of taxes owed when the auto title company had knowledge of facts causing such injury or shortfall, and failed to disclose the same to the Office of Motor Vehicles;

10. conviction of, or an entry plea of guilty or nolo contendere to any felony; or conviction of, or an entry plea of guilty or nolo contendere to any criminal charge, an element of which is fraud;

11. fraud, deceit, or perjury in obtaining any license issued under this Chapter;

12. failure to maintain, at all times during the existence of the license, all qualifications required for issuance or renewal of a license;

13. any material misstatement of fact, or omission of fact, in any application for the issuance or renewal of a license for an auto title company;

14. the repeated submission of checks which have been dishonored by the bank on which the check was drawn.

AUTHORITY NOTE: Promulgated in accordance with R.S. 32:735(B).

HISTORICAL NOTE: Promulgated by the Department of Public Safety and Corrections, Office of Motor Vehicles, LR 24:346 (February 1998), amended LR 25:2414 (December 1999).

§1519. Declaratory Orders and Rulings

A. Any person desiring a ruling on the applicability of any statute, or the applicability or validity of any rule to the regulation of auto title companies shall submit a written petition to the assistant secretary. The written petition shall cite all constitutional provisions, statutes, ordinances, cases, and rules which are relevant to the issue presented or which the person wishes the assistant secretary to consider prior to rendering an order or ruling in connection with the petition. The petition shall be typed, printed, or written legibly and signed by the person seeking the ruling or order. The petition shall also contain the person's full printed name, the complete physical and mailing address of the person, and a daytime telephone number.

B. The assistant secretary may request the submission of legal memoranda to be considered in rendering any order or ruling. The assistant secretary or his designee shall base the order or ruling on the documents submitted, including the petition and legal memoranda. If the assistant secretary or his designee determines that the submission of evidence is necessary for a ruling, the matter may be referred to a hearing officer prior to the rendering of the order or ruling for the taking of such evidence.

C. Notice of the order or ruling shall be sent to the person submitting the petition, as well as the persons receiving notice of the petition, at the mailing addresses provided in connection with the petition.

D. The assistant secretary may decline to render an order or ruling if the person submitting the petition has failed to comply with any requirement in §1519.

AUTHORITY NOTE: Promulgated in accordance with R.S. 32:735(B) and R.S. 49:962.

HISTORICAL NOTE: Promulgated by the Department of Public Safety and Corrections, Office of Motor Vehicles, LR 24:347 (February 1998).

§1521. Insufficient Funds Checks

A. Any auto title company which has submitted three or more checks to the department which have been returned because of insufficient funds in the account within a three-month period shall be required to use a cashier's check, certified check, or money order to pay taxes and fees when submitting any transaction to the department.

AUTHORITY NOTE: Promulgated in accordance with R.S. 32:735(B) and R.S. 49:962.

HISTORICAL NOTE: Promulgated by the Department of Public Safety and Corrections, Office of Motor Vehicles, LR 24:347 (February 1998).

§1523. Administrative Hearings

A. Any request for an administrative hearing must be submitted in writing to the Department of Public Safety and Corrections, Office of Motor Vehicles, Hearing Request, at Box 64886, Baton Rouge, LA 70896-4886, or hand delivered to the Office of Motor Vehicle Headquarters in Baton Rouge, LA. Any request for an administrative hearing must be received by the department within 30 days of the date the notice of suspension, revocation, cancellation, denial, or other action, was mailed, or hand delivered, as the case may be.

AUTHORITY NOTE: Promulgated in accordance with R.S. 32:375(B).

HISTORICAL NOTE: Promulgated by the Department of Public Safety and Corrections, Office of Motor Vehicles, LR 24:347 (February 1998).

§1525. Third Party Checks Prohibited

A. The department will not accept a check by a third party on behalf of an applicant for title and/or registration unless the check is submitted by an attorney, notary, motor vehicle dealer, insurance company transferring title to a wrecked vehicle, lending institution, financial institution regulated by state or federal authorities, or a duly licensed auto title company.

AUTHORITY NOTE: Promulgated in accordance with R.S. 32:375(B).

HISTORICAL NOTE: Promulgated by the Department of Public Safety and Corrections, Office of Motor Vehicles, LR 24:347 (February 1998).

§1527. Name, Trade Name, Advertisements, and Other Signage of Auto Title Companies

A. Since auto title companies may charge convenience fees and may offer services not available at an Office of Motor Vehicles field office, no auto title companies shall display any sign which may mislead the public into believing that the auto title company's office or business establishment is a field office of the Office of Motor Vehicles except as otherwise provided in Chapter 15.

B. No auto title company shall display any sign, logo, business name, or trade name, or cause to be advertised any sign, logo, business name, or trade name which includes the words "office of motor vehicles," "motor vehicle office," or "motor vehicles office," or any similar phrases, unless the sign, logo, business name, trade name, or advertisement clearly and prominently includes a statement indicating the business's status as an auto title company.

AUTHORITY NOTE: Promulgated in accordance with R.S. 32:735(B).

HISTORICAL NOTE: Promulgated by the Department of Public Safety and Corrections, Office of Motor Vehicles, LR 25:2415 (December 1999).

Subchapter B. Public Tag Agents

§1551. Definitions

A. As used in Chapter 15, Subchapter B, the following terms have the meanings described below.

Commissioner—Deputy Secretary of the Department of Public Safety and Corrections, Public Safety Services.

Department—Department of Public Safety and Corrections, Office of Motor Vehicles.

Driver Privacy Protection Act—the federal Driver Privacy Protection Act of 1994 (DPPA) (Title XXX of P.L. 103-322), 18 U.S.C. §2721 et seq., as implemented by the department in the *Louisiana Administrative Code*, Title 55, Part III, Chapter 5, Subchapter B.

Personal Information—information which includes the full name, complete physical address, and date of birth, driver's license number, and Social Security number.

AUTHORITY NOTE: Promulgated in accordance with R.S. 47:532.1.

HISTORICAL NOTE: Promulgated by the Department of Public Safety and Corrections, Office of Motor Vehicles, LR 25:2415 (December 1999).

§1553. Authority; Businesses and Governmental Entities

A. R.S. 47:532.1 authorizes the commissioner to establish a system of public tag agents authorized to collect the registration license taxes, as well as applicable sales and use taxes, and issue registration certificates and license plates to motor vehicles. An agent may be either a municipal or parish governing authority, a new motor vehicle dealer or his agent, or an auto title company. Public tag agents shall also be authorized to receive and process applications filed for certificates of title, duplicate certificates of titles, corrected certificates of title, recordation of liens, mortgages, or security interests against motor vehicles, conversions of plates, transfers of plates, replacements of lost or stolen plates and/or stickers, renewals of registration, duplicate registrations, and additional applications or transactions authorized by the commissioner.

B. The commissioner and a public tag agent, other than municipal and parish governing authority, shall enter into a contract which shall state the required procedures for the implementation of authorized activities. See §1569 for a copy of the contract.

C. With the exception of the requirements for a surety bond, all rules and regulations as well as all contractual provisions shall apply to municipal and parish governing authorities acting as public tag agents.

AUTHORITY NOTE: Promulgated in accordance with R.S. 47:532.1.

HISTORICAL NOTE: Promulgated by the Department of Public Safety and Corrections, Office of Motor Vehicles, LR 25:2415 (December 1999).

§1555. Convenience Fee

A. Public tag agents may collect a convenience in addition to any other fee or tax collected when processing a transaction for the department. The convenience fee shall not exceed $10, and shall be retained by the public tag agent.

AUTHORITY NOTE: Promulgated in accordance with R.S. 47:532.1.

HISTORICAL NOTE: Promulgated by the Department of Public Safety and Corrections, Office of Motor Vehicles, LR 25:2415 (December 1999), amended LR 27:1927 (November 2001).

§1557. Administrative Actions

A.1. The assistant secretary or his designee may suspend, revoke, cancel, or terminate the public tag agent's contract upon a violation by the agent or any agent's officers, directors, employees, owners, or other representatives of any responsibility or requirement established pursuant to the contractual agreement. LAC 55:III.Chapter 15.Subchapter B, or R.S. 47:532.1. In lieu of any of the previously listed actions, the deputy secretary may take other administrative action for such a violation including but not limited to the imposition of a fine or other sanction.

2. Additionally, the assistant secretary or his designee may suspend, revoke, cancel, or terminate the status of any person who is an employee, officer, director, or other representative of the public tag agent upon a violation of any responsibility or requirement established pursuant to the contractual agreement. LAC 55:III.Chapter 15. Subchapter B, or R.S. 47:532.1. It shall be the responsibility of the public tag agent to insure that all employees, officers, directors, or other representatives of the public tag agent are familiar with these responsibilities and requirements.

AUTHORITY NOTE: Promulgated in accordance with R.S. 47:532.1.

HISTORICAL NOTE: Promulgated by the Department of Public Safety and Corrections, Office of Motor Vehicles, LR 25:2415 (December 1999), amended LR 27:1927 (November 2001).

§1559. Applications

A. Those persons interested in becoming a public tag agent may inquire at the following address:

Attention: Planning and Coordination
Office of Motor Vehicles
Post Office Box 64886
Baton Rouge, LA 70896

B. No person shall act as a public tag agent until after submitting an application to the department on the approved form, and after the application has been approved by the department.

C. No person shall act as an employee, officer, director, or other representative of a public tag agent until after the person submits an application to the department on the approved form, and after the application has been approved by the department.

AUTHORITY NOTE: Promulgated in accordance with R.S. 47:532.1.

HISTORICAL NOTE: Promulgated by the Department of Public Safety and Corrections, Office of Motor Vehicles, LR 25:2416 (December 1999).

§1561. Eligibility, Suspension, Revocation, or Cancellation of Public Tag Agent's Authority

A. The following actions by a public tag agent, or by any of the public tag agent's employees, officer's, directors, managers, representatives, or owners, may subject the public tag agent to suspension, revocation, or cancellation of the public tag agent's authority by the department. In the alternative, the department may impose restriction on the public tag agent's authority as a result of any of the following actions by the public tag agent or applicant, or by any of the public tag agent's employees, officer's, directors, managers, representatives, or owners. The department may also deny an application and refuse to grant the applicant authority to act as a public tag agent as a result of any of the following actions by the applicant, or by any of the applicant's employees, officer's, directors, managers, representatives, or owners:

1. failure to remit taxes and fees collected from applicants for title transfers;

2. repeated late filings;

3. operating as an auto title company or public tag agent without a license or authorization for each location, with an expired license or authorization, or without a valid surety bond on file with the Office of Motor Vehicles;

4.a. the issuance of more than one temporary registration (T-marker) to a title applicant; or

b. the issuance of a T-marker without first collecting all taxes and fees and requiring the title applicant to show proof of compliance with the compulsory insurance law;

5. operating from an unlicensed or unauthorized location;

6. changing the ownership of the public tag agent and not reporting in writing to the Office of Motor Vehicles within 30 days from the date of such change;

7. changing the officers or directors of the public tag agent and not reporting in writing to the Office of Motor Vehicles within 30 days from the date of such change;

8. being a principal or accessory to the alteration of documents relevant to a registration or titling transaction that results in material injury to the public records or a short fall in the collection of taxes owed;

9. the forwarding to the Office of Motor Vehicles by a public tag agent of a document relevant to a registration or titling transaction that results in a material injury to the public records, or a short fall in the collection of taxes owed when the public tag agent had knowledge of facts causing such injury or shortfall, and failed to disclose the same to the Office of Motor Vehicles;

10. conviction of, or an entry plea of guilty or nolo contendere to, any felony or conviction of, or an entry plea of guilty or nolo contendere to, any criminal charge, an element of which is fraud;

11. fraud, deceit, or perjury in obtaining any license issued under this Chapter;

12. failure to maintain at all times during the existence of the authorization, all qualifications required for issuance or renewal of the authorization;

13. any material misstatement of fact or omission of fact in any application for the issuance or renewal of an authorization for a public tag agent;

14. the repeated submission of checks which have been dishonored by the bank on which the check was drawn.

B. The department may revoke, suspend, or cancel any approval, license or permit of any employee, officer,

director, manager, representative, or owner of a public tag agent who violates any provision of Subsection A of §1561. Any person subject to an order as provided in this Paragraph shall not work for, or be associated with, the public tag agent in any manner unless approved by the department in writing.

AUTHORITY NOTE: Promulgated in accordance with R.S. 47:532.1.

HISTORICAL NOTE: Promulgated by the Department of Public Safety and Corrections, Office of Motor Vehicles, LR 25:2416 (December 1999).

§1563. Name, Trade Name, Advertisements, and Other Signage of Public Tag Agents

A. No public tag agent shall display any sign, logo, business name, or trade name, or cause to be advertised any sign, logo, business name, or trade name which includes the words "office of motor vehicles," "motor vehicle office," or "motor vehicles office," or any similar phrases, unless the sign, logo, business name, trade name, or advertisement clearly and prominently includes a statement indicating the business's status as a public tag agent.

AUTHORITY NOTE: Promulgated in accordance with R.S. 47:532.1.

HISTORICAL NOTE: Promulgated by the Department of Public Safety and Corrections, Office of Motor Vehicles, LR 25:2416 (December 1999).

§1565. Driver Privacy Protection Act

A. Every applicant for a driver's license, certificate of title, or for a new or renewed vehicle registration at a public tag agent's place of business shall be given the opportunity to prohibit the disclosure of personal information as defined in LAC 55, Part III, Chapter 5, §553, Subchapter B, by completing the department's approved form, and submitting the form to the public tag agent. The public tag agent shall forward the properly completed form to the department. The public tag agent shall advise the person submitting the form that any form which is incomplete or which is illegible shall not be processed and shall not be returned.

AUTHORITY NOTE: Promulgated in accordance with R.S. 47:532.1.

HISTORICAL NOTE: Promulgated by the Department of Public Safety and Corrections, Office of Motor Vehicles, LR 25:2416 (December 1999).

§1567. Bond Requirement

A. All public tag agents other than municipal and parish governing authorities shall furnish security for the faithful performance of their duties as follows.

1. Each public tag agent other than a municipal governing authority shall execute a good and sufficient surety bond with a surety company qualified to do business in Louisiana as surety, in a sum of not less than $10,000 nor more than $100,000, if surety bond is available for purchase, which bond shall name the Department of Public Safety and Corrections, Office of Motor Vehicles as obligee and shall be subject to the condition that, if such public tag agent shall, throughout the entire term of the bond, timely file with the office of motor vehicles all applications delivered to such public tag agent for filing, and all fees and taxes collected by such public tag agent, the obligation shall be void. If the company does not do so, the obligation of the surety shall remain in full force and effect. A public tag agent having multiple locations need furnish only a single $10,000 surety bond in addition to any other bonds required by law.

2. The surety bond furnished pursuant to §1567 shall be delivered to and filed with the Department of Public Safety and Corrections, Office of Motor Vehicles.

AUTHORITY NOTE: Promulgated in accordance with R.S. 47:532.1.

HISTORICAL NOTE: Promulgated by the Department of Public Safety and Corrections, Office of Motor Vehicles, LR 25:2417 (December 1999).

§1569. Contracts

A. The commissioner and public tag agents other than municipal and parish governing authorities may enter into contracts which shall state the required procedures for the implementation of LAC 55, Part III, Chapter 15, Subchapter B. Such contracts may terminate upon violation of R.S. 47:532.1, LAC 55, Part III, Chapter 15, Subchapter B, or the provisions of the contract between the department and the public tag agent foregoing provisions.

B. The contract between the department and the public tag agent shall be on the form approved by the assistant secretary. The department may require that a public tag agent sign separate contracts to perform the following functions:

1. processing title work and issuing of registration certificates and permanent license plates;

2. conducting testing for, and in the issuance of, class "D" and "E" driver's licenses;

3. processing the filing of electronic liens;

4. processing the reinstatement of driver's licenses and providing status information.

C. The contract between the department and the public tag agent shall have a term of one year. The department may provide for automatic renewals.

AUTHORITY NOTE: Promulgated in accordance with R.S. 47:532.1.

HISTORICAL NOTE: Promulgated by the Department of Public Safety and Corrections, Office of Motor Vehicles, LR 25:2417 (December 1999), amended LR 27:1927 (November 2001).

§1571. Declaratory Orders and Rulings

A. Any person desiring a ruling on the applicability of any statute, or the applicability or validity of any rule in LAC 55, Part III, Chapter 15, Subchapter B, regarding public tag agents, shall submit a written petition to the deputy secretary. The written petition shall cite all constitutional provisions, statutes, ordinances, cases, and rules which are relevant to the issue presented or which the person wishes the deputy secretary to consider prior to rendering an order or ruling in connection with the petition. The petition shall be typed, printed or written legibly, and signed by the person seeking the ruling or order. The petition shall also contain the person's full printed name, the complete physical and mailing address of the person, and a daytime telephone number.

B. If the petition includes reference to a specific transaction handled by the department or a public tag agent, or if the petition relates to the issuance, revocation, cancellation, or denial of any license, permit or authorization, then the person submitting the petition shall also submit proof that he has notified all of the persons involved in the transaction or issuance, revocation, cancellation, or denial of the license, permit or authorization by certified mail, return receipt requested. If the person is unable to notify the involved person or persons after otherwise complying with the notice requirement, he shall so state in his petition.

C. The deputy secretary may request the submission of legal memoranda to be considered in rendering any order or ruling. The deputy secretary or his designee shall base the order or ruling on the documents submitted including the petition and legal memoranda. If the deputy secretary or his designee determines that the submission of evidence is necessary for a ruling, the matter may be referred to a hearing officer prior to the rendering of the order or ruling for the taking of such evidence.

D. Notice of the order or ruling shall be sent to the person submitting the petition as well as the security provider receiving notice of the petition at the mailing addresses provided in connection with the petition.

E. The deputy secretary may decline to render an order or ruling if the person submitting the petition has failed to comply with any requirement in this Section.

AUTHORITY NOTE: Promulgated in accordance with R.S. 47:532.1 and R.S. 49:962.

HISTORICAL NOTE: Promulgated by the Department of Public Safety and Corrections, Office of Motor Vehicles, LR 25:2418 (December 1999).

§1573. Confidentiality

A. The public tag agent, its employees, representatives, and agents shall maintain the confidentiality of all records and information received or processed in connection with any function performed pursuant to a contract with the department.

B. The public tag agent shall forward all request for information commonly referred to as public records request to the department for a response.

C. The public tag agent shall be responsible for the disclosure of any information in connection with the processing of any transaction on behalf of the department. The public tag agent shall comply with all applicable federal and state laws regarding the disclosure of information, including but not limited to 18 U.S.C. §2721 et seq., and 42 U.S.C. §405(c)(2)(C).

AUTHORITY NOTE: Promulgated in accordance with R.S. 47:532.1.

HISTORICAL NOTE; Promulgated by the Department of Public Safety and Corrections, Office of Motor Vehicles, LR 27:1927 (November 2001).

§1575. Driver's License Issuance

A. A public tag agent may contract with the department to administer the necessary tests and issue or renew identification cards, handicap hang tag identification cards, and driver's licenses. The written knowledge test and the driving or skills test shall be administered in accordance with the provisions of LAC 55:III.Chapter 1.Subchapter C.

B. The public tag agent's third party examiner shall utilize only department approved visual screening equipment. In lieu thereof, each examiner may opt to utilize the standard Snellen wall-chart for visual acuity. The visual acuity testing shall be administered in a manner approved by the department.

C. A public tag agent shall develop controls to secure the materials and equipment necessary to issue driver's licenses. Such controls shall be submitted in writing to the department. A public tag agent shall not issue any driver's licenses until the controls required by this Section have been approved by the department in writing. Once approved, the controls shall be implemented as written. Any changes to the control approved by the department shall be approved in writing prior to implementation.

D. The department shall designate the types of driver's license and identification card transactions a public tag agent may perform, such as renewals and duplicates. Such designation shall be at the sole discretion of the department. Identification cards include the photographic identification issued with a handicap hangtag.

E. Qualifications for Issuance of Driver's Licenses and Identification Cards. In addition to the qualification requirements contained in statute and this Chapter, a public tag agent shall meet these additional requirements in order to be approved to perform driver's license and identification card transaction designated by the department.

1. Insurance. The insurance policy shall provide coverage and a defense for the state of Louisiana and the Department of Public Safety and Corrections, as well as the employees of the state and the department.

a. A policy for professional liability/errors and omissions with minimum coverage of $1,000,000.

b. A policy for general liability with minimum coverage of $1,000,000.

2. A security system installed by a company licensed and approved by the Office of State Fire Marshal. This system shall be monitored 24 hours a day by a monitoring company.

3. A video surveillance system which at a minimum monitors all entrances, the driver's license camera station, and the secure supply room. Such system shall be installed by a company licensed and approved by the Office of State Fire Marshal. The video images shall be retained by the system for a minimum of 30 days with the ability to save the video indefinitely if so requested by the department.

F. Camera Station

1. The public stag agent shall purchase the camera station from the current vendor providing the credential issuance solution for the department. The public stag agent shall receive prior approval from the department before purchasing the camera station.

2. A public tag agent may only dispose of a camera station in a manner approved by the department.

AUTHORITY NOTE: Promulgated in accordance with R.S. 47:532.1.

HISTORICAL NOTE; Promulgated by the Department of Public Safety and Corrections, Office of Motor Vehicles, LR 27:1927 (November 2001), amended LR 40:370 (February 2014).

§1577. Other Transactions

A. The department may contract with public tag agents to perform other transactions authorized in R.S. 47:532.1. In such case, the public tag agent shall use the equipment and procedures required by the department to process these transactions. The public tag agent shall use an approved written control plan to secure any materials or equipment as directed by the department.

AUTHORITY NOTE: Promulgated in accordance with R.S. 47:532.1.

HISTORICAL NOTE: Promulgated by the Department of Public Safety and Corrections, Office of Motor Vehicles, LR 27:1928 (November 2001).

Chapter 17. Compulsory Insurance

Subchapter A. General

§1701. Definitions

A. As used in this Chapter, the following terms have the meanings described below.

Assistant Secretary—the *assistant secretary* of the Office of Motor Vehicles.

Department—the Department of Public Safety and Corrections, Office of Motor Vehicles.

New Owner—the person or persons who acquire, or who have previously acquired ownership of a motor vehicle that was the subject of a violation of this Chapter, but who do not appear on the records of the department as the registered owner of such motor vehicle.

Operator—every person, other than a chauffeur, who drives or is in actual physical control of a motor vehicle upon a highway or who is exercising control over or steering a vehicle being towed by a motor vehicle.

Owner—a person who holds a legal title to a vehicle or in the event the vehicle is the subject of an agreement for the conditional sale, lease, or transfer of possession thereof with the right of purchase upon the performance of the conditions stated in the agreement, with the right of immediate possession in the vendee, lessee, possessor, or in the event such similar transaction is had by means of mortgage and the mortgagor of a vehicle is entitled to possession, then the conditional vendee, lessee, possessor, or mortgagor shall be deemed the owner for the purposes of this Chapter.

Person—an individual, partnership, corporation, limited liability company, or other legal entity.

AUTHORITY NOTE: Promulgated in accordance with R.S. 32:863.1.

HISTORICAL NOTE: Promulgated by the Department of Public Safety and Corrections, Office of Motor Vehicles, LR 24:472 (March 1998).

§1703. Official Notification

A. The notice of noncompliance issued by a law enforcement officer to the operator of the motor vehicle at the time of the violation of R.S. 32:863.1 serves as official notification by the department that a violation of R.S. 32:863.1 has occurred, and such notice triggers all of the requirements for compliance contained in this Chapter and in R.S. 32:863.1 as are applicable.

B. Notification issued pursuant to this Chapter shall be on a form approved by the assistant secretary and shall include the following.

1. In those cases in which the motor vehicle is impounded, the notice shall inform the owner/operator that the motor vehicle shall remain impounded and the registration of the motor vehicle shall be revoked until such time as the owner provides satisfactory proof to the department that the motor vehicle is covered by a policy of liability insurance or such other security as is authorized by state law, and until such time as the owner pays all fees required by R.S. 32:863.1.

2. In those cases in which the motor vehicle is not impounded, the notice shall inform the owner/operator that the motor vehicle's registration will be revoked three days from the date the notice was issue, and the registration will remain revoked until such time as the owner provides satisfactory proof to the department that the motor vehicle is covered by a policy of liability insurance or such other security as is authorized by state law, and until such time as the owner pays all fees required by R.S. 32:863.1.

C. Any request for an administrative hearing must be submitted in writing to the:

Department of Public Safety and Corrections
Office of Motor Vehicles
Hearing Request
Box 64886
Baton Rouge, LA 70896-4886

or hand-delivered to the:

Office of Motor Vehicle Headquarters (in)
Baton Rouge, LA.

AUTHORITY NOTE: Promulgated in accordance with R.S. 32:863.1.

HISTORICAL NOTE: Promulgated by the Department of Public Safety and Corrections, Office of Motor Vehicles, LR 24:472 (March 1998).

§1705. Revocation of Registration Privileges

A. If the owner of the motor vehicle cited for being operated in violation of R.S. 32:863.1 provides proof of valid insurance in effect at the time of the violation within three days of the date of the violation, the registration for that motor vehicle shall not be revoked and the license plate shall be returned to the individual within 48 hours upon its receipt by the department.

B. If the owner of the motor vehicle cited for being operated in violation of R.S. 32:863.1 does not provide proof of valid insurance in effect at the time of the violation within three days of the date of the violation, the registration for

that motor vehicle shall be revoked and the license plate shall be destroyed.

C.1. Any period of revocation shall begin on the fourth day after the date of the violation. The registration shall remain revoked until the owner of the motor vehicle complies with requirements of R.S. 32:863.1 and this Chapter.

2. If a license plate was seized at the time of the violation, and a new plate issued for the motor vehicle in question, a pickup order shall be issued for the new plate.

3. Nothing in this Chapter shall be construed as limiting or prohibiting the department from taking any other action against a registered owner of a motor vehicle who subsequently applied for a new plate, after the previous plate was seized pursuant to R.S. 32:863.1, without the registered owner first complying with the provisions of R.S. 32:863.1 and the provisions of this Chapter.

AUTHORITY NOTE: Promulgated in accordance with R.S. 32:863.1.

HISTORICAL NOTE: Promulgated by the Department of Public Safety and Corrections, Office of Motor Vehicles, LR 24:473 (March 1998).

§1707. Proof of Insurance

A. The following are the only acceptable means of proving that the motor vehicle is covered by a policy of liability insurance or other statutorily authorized security when the owner or his representative appears in an Office of Motor Vehicles office in order to show compliance with the compulsory insurance law as is required in R.S. 32:863.1 and the vehicle weighs 20,000 pounds or less:

1. proof of a liability insurance policy providing at $10,000/$20,000 bodily injury and $10,000 property damage as provided in R.S. 32:900(B) by:

a. the insurance identification card issued by the insurance company;

b. the declaration page of the policy of insurance issued by the insurance company;

c. the policy of liability insurance issued by the insurance company;

d. documentation from an insurance agent indicating that a timely binder for coverage had been issued if it is shown to the satisfaction of the assistant secretary or his designee that the agent had the authority to bind coverage by the insurance company;

2. proof of an approved motor vehicle liability bond issued by a surety or insurance company in the amount of $30,000 with respect to the motor vehicle involved in the violation;

3. proof that a certificate was issued from the state treasurer stating that cash or securities in the amount of $30,000 is on deposit with the state treasurer;

4. proof that a Louisiana Certificate of Self-Insurance was issued under R.S. 32:1042.

B. The following are the only acceptable means of proving that a motor vehicle with a gross weight of 20,001 pounds to 50,000 pounds is covered by a policy of liability insurance or other statutorily authorized security when the owner or his representative appears in an Office of Motor Vehicles office in order to show compliance with the compulsory insurance law as is required in R.S. 32:863.1:

1. proof of a liability insurance policy providing at $25,000/$50,000 bodily injury and $25,000 property damage as provided in R.S. 32:900(B):

a. the insurance identification card issued by the insurance company;

b. the declaration page of the policy of insurance issued by the insurance company;

c. the policy of liability insurance issued by the insurance company;

d. documentation from an insurance agent indicating that a timely binder for coverage had been issued if it is shown to the satisfaction of the assistant secretary or his designee that the agent had the authority to bind coverage by the insurance company;

2. proof that a Louisiana Certificate of Self-Insurance was issued under R.S. 32:1042;

3. proof of single state registration (current form RS-3);

4. proof of Public Service Commission authority (current Intra-State ID Cab Card); or

5. proof that a Certificate of Self-Insurance was issued by the Interstate Commerce Commission (ICC) under R.S. 32:900(M)(3).

C. The following are the only acceptable means of proving that a motor vehicle with a gross weight of more than 50,000 pounds is covered by a policy of liability insurance or other statutorily authorized security when the owner or his representative appears in an Office of Motor Vehicles office in order to show compliance with the compulsory insurance law as is required in R.S. 32:863.1:

1. proof of a liability insurance policy providing at $100,000/$300,000 bodily injury and $25,000 property damage as provided in R.S. 32:900(B):

a. the insurance identification card issued by the insurance company;

b. the declaration page of the policy of insurance issued by the insurance company;

c. the policy of liability insurance issued by the insurance company;

d. documentation from an insurance agent indicating that a timely binder for coverage had been issued if it is shown to the satisfaction of the assistant secretary or his designee that the agent had the authority to bind coverage by the insurance company;

2. proof that a Louisiana Certificate of Self-Insurance was issued under R.S. 32:1042;

3. proof of single state registration (current form RS-3);

4. proof of Public Service Commission authority (current Intra-State ID Cab Card); or

5. proof that a Certificate of Self-Insurance was issued by the Interstate Commerce Commission (ICC) under R.S. 32:900(M)(3).

AUTHORITY NOTE: Promulgated in accordance with R.S. 32:863.1.

HISTORICAL NOTE: Promulgated by the Department of Public Safety and Corrections, Office of Motor Vehicles, LR 24:473 (March 1998).

§1709. Proof of Insurance for Rental or Leased Motor Vehicles

A. For purposes of this Chapter, a rental motor vehicle is a motor vehicle which remains registered in the name of the rental company with the Office of Motor Vehicles.

B. For purposes of this Chapter, a leased motor vehicle is a motor vehicle or which is registered in the name of the lessee in addition to the name of the rental company with the Office of Motor Vehicles.

C. The law enforcement officer enforcing the provisions of R.S. 32:863.1 may contact the rental agent to determine if the rental agent wishes to retake possession of the motor vehicle. If the rental agent retakes possession of the motor vehicle, the rental motor vehicle shall not be impounded and the license plate of the rental motor vehicle shall not be seized.

D. A leased motor vehicle shall be subject to the impoundment provisions of R.S. 32:863.1 unless one of the exceptions applies.

E. No vehicle shall be subject to impoundment if the operator provides proof that he owns a motor vehicle which is covered by a policy of liability insurance.

AUTHORITY NOTE: Promulgated in accordance with R.S. 32:863.1.

HISTORICAL NOTE: Promulgated by the Department of Public Safety and Corrections, Office of Motor Vehicles, LR 24:474 (March 1998).

§1711. Transfer of Title of a Vehicle Subject to the Provision of this Chapter

A. If the owner of a motor vehicle, which was the subject of a citation for violation of R.S. 32:863.1, desires to sell, donate, or transfer such motor vehicle, then the owner of such motor vehicle shall comply with the following.

1. There must be a bona fide sale, donation, transfer or assignment to a new owner of the motor vehicle which was the subject of a citation for violation of R.S. 32:863.1.

2. The new owner of the motor vehicle which was previously the subject of a citation for violation of R.S. 32:863.1 shall:

a. apply for and obtain a certificate of title for the motor vehicle;

b. pay the vehicle registration license tax; and

c. provide proof that the motor vehicle is covered by a valid policy of liability insurance or such other security as authorized by §1707.

3. All fees required by R.S. 32:863.1 shall be paid prior to the department processing the title transaction.

B. The new owner of the motor vehicle may pay the fees owed by the previous owner of the motor vehicle who was subject to the violation of R.S. 32:863.1, but the previous owner shall ultimately retain responsibility for the fees until the fees are paid to the department.

AUTHORITY NOTE: Promulgated in accordance with R.S. 32:863.1.

HISTORICAL NOTE: Promulgated by the Department of Public Safety and Corrections, Office of Motor Vehicles, LR 24:474 (March 1998).

§1713. Declaratory Orders and Rulings

A. Any person desiring a ruling on the applicability of R.S. 32:863.1 or any other statute, or the applicability or validity of any rule, to the impoundment of motor vehicles for failing to have proof of liability insurance or other security shall submit a written petition to the assistant secretary. The written petition shall cite all constitutional provisions, statutes, ordinances, cases, and rules which are relevant to the issue presented or which the person wishes the assistant secretary to consider prior to rendering an order or ruling in connection with the petition. The petition shall be typed, printed or written legibly, and signed by the person seeking the ruling or order. The petition shall also contain the person's full printed name, the complete physical and mailing address of the person, and a daytime telephone number.

B. If the petition seeks an order or ruling on a transaction handled by the Office of Motor Vehicles, the person submitting the petition shall notify the person or persons who submitted the transaction, if other than the person submitting the petition. Such notice shall be sent by certified mail, return receipt requested. In such case, the petition shall not be considered until proof of such notice has been submitted to the assistant secretary, or until the person petitioning for the order or ruling establishes that the person or persons cannot be notified after a due and diligent effort. The notice shall include a copy of the petition submitted to the assistant secretary.

C. The assistant secretary may request the submission of legal memoranda to be considered in rendering any order or ruling. The assistant secretary or his designee shall base the order or ruling on the documents submitted including the petition and legal memoranda. If the assistant secretary or his designee determines that the submission of evidence is necessary for a ruling, the matter may be referred to a hearing officer prior to the rendering of the order or ruling for the taking of such evidence.

D. Notice of the order or ruling shall be sent to the person submitting the petition as well as the persons receiving notice of the petition at the mailing addresses provided in connection with the petition.

E. The assistant secretary may decline to render an order or ruling if the person submitting the petition has failed to comply with any requirement in §1713.

AUTHORITY NOTE: Promulgated in accordance with R.S. 32:863.1 and R.S. 49:962.

HISTORICAL NOTE: Promulgated by the Department of Public Safety and Corrections, Office of Motor Vehicles, LR 24:474 (March 1998).

§1715. Severability

A. The provisions of each Section are severable. If any provision or item of Act 1486 of the 1997 Regular Session, amending R.S. 32:863.1 is held invalid, then those provisions or items of Chapter 17 relating to those items or provisions of Act 1486 that are held invalid are severable, and such invalidity shall not affect other provisions, items, or applications of Chapter 17 which can be given effect without regard to any invalid provisions of Act 1486.

AUTHORITY NOTE: Promulgated in accordance with R.S. 32:863.1.

HISTORICAL NOTE: Promulgated by the Department of Public Safety and Corrections, Office of Motor Vehicles, LR 24:474 (March 1998).

§1717. Owner and Driver Compliance

A. Each person who applies for registration of a motor vehicle, or applies for a driver's license, shall declare, in writing, on a form provided by the department that all motor vehicles registered in such person's name are covered by security as required by R.S. 32:861, and that such person intends to maintain said security at all times while said vehicle is used upon the highways of Louisiana.

B. In accordance with R.S. 32:863(D)(5), the department shall collect an administrative fee of $25 to offset the administrative costs of the department whenever an individual reinstates his registration privileges after such registration privileges were revoked in connection a reported cancellation of a motor vehicle liability insurance policy in accordance with R.S. 32:863(A)(3)(a).

1. This administrative fee shall be in addition to the reinstatement fee required by R.S. 32:863(A)(3)(a).

2. The administrative fee shall be collected for each reported insurance cancellation when the registration privileges are reinstated even if multiple cancellations on one or more vehicles are being reinstated at one time.

3. No administrative fee will be collected if the owner submits proof satisfactory to the department that there was no lapse in coverage or the person provides proof satisfactory to the department that such person sold or otherwise transferred the vehicle prior to the date the motor vehicle liability insurance was cancelled.

AUTHORITY NOTE: Promulgated in accordance with R.S. 32:862 and 32:863.

HISTORICAL NOTE: Promulgated by the Department of Public Safety and Corrections, Office of Motor Vehicles, LR 39:3324 (December 2013).

Subchapter B. Specifications for Notification of Initiation, Termination, or Modification of Liability Security

§1750. Definitions

A. As used in this Subchapter, the following terms have the meanings described below.

Account Number/User-ID—the unique identifier assigned to each servicing agent. If the electronic filing method is via the internet, this code is assigned by GXS to identify the mailbox for the reporting entity and is also used by GXS for billing. If the electronic filing method is via the Louisiana secure server, the account number and user-id will be assigned by the department.

Business Days—business days are Monday through Friday, between 8:00 a.m. and 4:30 p.m. central time. Business days do not include Saturday, Sunday, state holidays or any other holiday declared by the governor.

Change in Coverage—a change in coverage shall be considered either an initiation of coverage or a termination of coverage based on the nature of the change. The addition of a vehicle to a liability security policy shall be considered an initiation of coverage. The effective date of the initiation shall be the date the vehicle was added to the policy, regardless of the date the original policy was issued. The deletion of a vehicle from a liability security policy shall be considered a termination of coverage. The replacement of a covered vehicle with another vehicle in a liability security policy shall be considered both a termination of coverage for the replaced vehicle and an initiation of coverage for the replacement vehicle. If the registered owner of a vehicle changes, the previous owner's coverage shall be terminated and the new registered owner's initiation of coverage shall be reported. If the principal driver changes, but the registered owner stays the same, no change in coverage shall be reported. Renewals, without a lapse in coverage, shall not be reported. Renewals in which only the policy number changes shall not be reported. Changes in coverage not related to the vehicle liability security being issued, procured, recalled, reinstated, terminated, canceled or changed from binder status to an active policy number shall not be reported.

Department—Department of Public Safety and Corrections.

Duplicate Record—any record reported with the same information (INS-COMP-CODE, VIN, TERMINATION-OR-CHANGE-OR-EFFECTIVE-DATE and TRANSACTION-TYPE) as a record already in the Department's insurance system is a DUPLICATE RECORD and will be rejected. (Disposition code "D").

Edit Error—a record submitted by an insurance company or servicing agent unacceptable for filing purposes due to the absence of information in a required field or the presence of invalid information in the key data fields is an EDIT ERROR. Key data fields are identified and detailed in the technical filing specifications. Any record which is returned to an insurance company or servicing agent as an EDIT ERROR is not a filing. The record shall be corrected and re-reported within 15 business days of the RETURN-DATE. (Disposition code "E").

Edit Error Mask—the field within each type of record (Header, Individual Vehicle and Fleet) that is used to identify fields that failed to pass the edits. When the Disposition code is "E" the EDIT-ERROR-MASK field will identify which fields failed to pass the edits (1) and which fields are edit error free (0).

Fleet Policy—a policy insuring a business with a fleet of five or more vehicles registered in Louisiana for which VIN information is not maintained on each vehicle. If the insurance company maintains the VIN of each vehicle within the fleet, the filing must be reported on a vehicle by vehicle basis.

Hit—a record submitted by an insurance or servicing agent which matches a Department's vehicle registration record and is an acceptable record. (Disposition code "H").

Incorrect Type-Use—the reported vehicle is exempt from the Compulsory Motor Vehicle Liability Security Law because of the "type use" or "class" of vehicle. This record is not updated to the system. Do not resubmit this record. (Disposition code "I").

Initiation of Coverage—the issuing or making of a liability security policy, liability bond, deposit or other security.

Insurance Company Code—a unique number assigned to each insurance company. The National Association of Insurance Commissioners Code (NAIC code) or a temporary identification number assigned by the Department to an insurance company for the purpose of R.S. 32:863.2 of the Compulsory Motor Vehicle Liability Security Law will be used.

Lapse—when a vehicle liability security policy is not in effect for one or more days.

No-Hit—a record submitted by an insurance company or servicing agent which does not match a Department vehicle registration record and which does not pass the VINA check. The filing must be corrected and resubmitted within 15 business days of the RETURN-DATE. (Disposition code "U").

Non-Renewals—

a. a non-renewal of a motor vehicle liability insurance policy shall include:

i. a refusal by the insurer to issue a superseding policy or a renewal of such policy;

ii. a request by the insured that a superseding policy not be issued or such policy not be renewed; or

iii. a failure of the insured to make the premium payment due upon a superseding policy or on a renewal of such policy offered by the insurer.

b. Non-renewals are to be reported in the same manner as cancellations or terminations.

Notification—the furnishing of information by a security provider to the department concerning liability security or lack of liability security on a motor vehicle, or a change or correction of data concerning the item of security, the vehicle or the lessee or owner, as required by R.S. 32:863.2 of the Motor Vehicle Liability Security Law and these rules and regulations.

Out-of-Sequence Error—the records submitted are not in chronological order. For example the cancellation is reported prior to the initiation. This record is unacceptable for filing purposes and is returned to the insurance company. Records shall be reported in chronological order. (Disposition code "S").

Owner—the name of the legal lessee or owner as obtained by the security provider from the vehicle registration certificate.

Owner ID Number—driver's license number for an individual, lessee or owner, the left most nine (9) characters of the driver's license number or federal tax identification number for the lessee or owner such as a corporation, an estate, etc. This is always a required field.

Policy Number—the number of the policy that the vehicle is insured under. The insurance company will maintain a list of policy numbers and effective dates for each vehicle or fleet reported.

Prescribed—the record submitted is over 18 months old. There is an 18 month difference between the TERMINATION-OR-CHANGE-OR-EFFECTIVE-DATE or ISSUE-DATE and the date this record was received by the Department. This record is not updated to the system. Do not resubmit this record. (Disposition code "P").

Recall of Notification—a record submitted to the department by a security provider or servicing agent, which rescinds a record previously submitted to the department in error. The recall record fields match the original record fields except for the TRANSACTION-TYPE. A transaction type "B" will recall an initiation ("A"). A transaction type "1" will recall a termination ("0").

Record—insurance information pertaining to the items required by law and these rules and regulations for an individual vehicle or fleet coverage.

Return Filing Report—a report prepared by the department for an insurance company or servicing agent following completion of processing (editing of data and record matching) containing the disposition of each record. It is the responsibility of the insurance company or servicing agent to review this report and take the necessary corrective action as required by these rules and regulations. If the return report contains only the header record, that record was submitted with incorrect or missing information. In this case, the header record must be corrected and all of the filing records must be resubmitted. None of the filing records submitted with an incomplete or incorrect header record will be accepted. Please note the Office of Motor Vehicles is not responsible for keeping a copy of this report.

Restricted Hit—a record submitted by an insurance company or servicing agent which does not match a Department vehicle registration record but which does pass the VINA edit check. These records do not need to be re-reported. (Disposition code "R").

Return Date—the department will provide a return date in its filing report. The return date will be the date the Department writes the filing report and will equal the date in the DATE-PROCESSED field of the trailer record.

Security Provider—a liability insurance company or other provider of liability security required under the

Compulsory Motor Vehicle Liability Security Law (R.S. 32:861 et seq.).

Service Agent—any person or organization duly designated by an insurance company to prepare, transmit or deliver records on behalf of such insurance company.

Service Agent Code—a number assigned to each service agent. Either the National Association of Insurance Commissioners Code (NAIC code) or a temporary identification number assigned by the department will be used.

Termination/Cancellation of Liability Security—any cancellation or termination of liability security on a motor vehicle (whether caused by the insurer or insured).

Timely Filing—notification received within 15 business days from the issue date when a vehicle's liability security is issued, procured, recalled, reinstated, terminated, canceled or changed from binder status to an active policy number.

VINA—routine used to compute the VIN check digit for 1981 or newer vehicles.

AUTHORITY NOTE: Promulgated in accordance with R.S. 32:863.2.

HISTORICAL NOTE: Promulgated by the Department of Public Safety and Corrections, Office of Motor Vehicles, LR 30:2842 (December 2004), amended LR 41:2666 (December 2015).

§1752. Introduction

A. Effective July 1, 1998, security providers shall report to the Department of Public Safety and Corrections, Office of Motor Vehicles, certain information, on a vehicle by vehicle basis, with certain exceptions, in accordance with the Compulsory Motor Vehicle Liability Security Law (R.S. 32:861 et. seq.) "the compulsory security law" and with these rules and regulations regarding the initiation of liability coverage as well as the termination, withdrawal, cancellation, lapsing or otherwise rendering ineffective of liability coverage.

B. As required by law and these rules and regulations, reports must be made to the department whenever liability security on a vehicle is issued, procured, recalled, reinstated, terminated, canceled or changed from binder status to an active policy number.

C. Such information must be transmitted to the department in an efficient and timely manner in accordance with these rules and regulations.

D. Insurance companies shall not provide information to the department except as required by law or these rules and regulations. Examples of information which will not be submitted to the department include, but are not limited to, the following:

1. information on non-liability coverage such as collision and comprehensive policies;

2. information of liability policies not in compliance with the compulsory security law (such as umbrella policies with excess coverage and non-ownership policies);

3. addition or deletion of other drivers;

4. change of policy number;

5. invalid type use or class.

E. The purpose of the information required is to enforce the Motor Vehicle Safety Responsibility Law (R.S. 32:851 et. seq.) and particularly the compulsory security law (R.S. 32:861 et. seq.). Consistently with this purpose, the information maintained by the department will be provided to a person making proper written request under R.S. 32:863.2.C and R.S. 32:871, only after an accident is reported in accordance with R.S. 32:871. Information will be provided on a single individual or vehicle basis only. In order to preserve the proprietary information of insurance companies, insurance coverage information compiled by company or by zip code, for example, will not be made available to inquirers, nor will the department develop or maintain any composite list by insurance company or insurance company identifier except by count of disposition codes. The department will cooperate fully with the insurance industry in preserving the security of customer lists and related data. The department will initiate criminal prosecution for violations arising out of the wrongful taking or use of information reported under these rules and regulations.

F. The intent of these rules and regulations is to provide a mechanism whereby the liability security coverage for each vehicle subject to the compulsory security law is identified, with the least necessary intrusion into the proprietary interests of liability security providers. To that end the department, responding to the expressed concerns of the insurance industry, has attempted to eliminate unnecessary redundancy in the data required to be reported. To the extent that any adjustments are required in the scope of reportable information, the department solicits the continuing active cooperation of the insurance industry in maintaining the effective operation of the compulsory security law.

G. These rules and regulations permit adjustments to technical specifications. Security providers will be advised by mail (postal, electronic or both) of any changes in the technical specifications of this Section. The department will always attempt to give 90 days notice of these adjustments so that the security provider may have enough time to implement the changes, however, legislative changes or other circumstances may result in notice of less than 90 days. Such mailings may be called "advisory bulletins" or "memorandums" from the Commissioner of the Office of Motor Vehicles. These bulletins or memorandums may also contain clarifications, helpful hints and such additional information as may be deemed applicable to compliance with the compulsory security law. Moreover, in the event that an unusual situation is not covered by these regulations, a reasonable procedure consistent with the compulsory security law will be followed.

H. In cases where, after written notice, a security provider continually fails to supply the information required by R.S. 32:863.2 and these rules and regulations, fees as provided by that statute may be imposed. A security provider will not be charged a fee for providing data based on a reasonable assumption, such as assuming in good faith that

the owner's driver's license number is the same as the named insured's driver's license number. Special consideration shall be given to unusual problems in compliance, provided in writing.

I. A security provider must notify the department when motor vehicle liability security is issued or procured or after motor vehicle liability security is recalled, reinstated, terminated, canceled or changed from binder status to an active policy number. For initiations and terminations such notification shall be made within 15 business days of the issue date. Notification shall be made in the form required by the department as set forth in these rules and regulations. A separate notice shall be submitted for each vehicle. Failure to properly notify the department may result in administrative fees.

J. Procedural questions concerning this regulation should be referred to (email is the preferred method of communication):

1. Mailing Address:

   Louisiana Department of Public Safety and Corrections
   Office of Motor Vehicles
   Post Office Box 64886
   Baton Rouge, LA 70896
   Attention: Compulsory Insurance Unit

2. Phone Number: (225) 925-7285 or (225) 925-3731

3. Email: Insurance@dps.la.gov

4. Fax Number: (225) 922-0158

K. Technical questions concerning this regulation should be referred to (email is the preferred method of communication):

1. Mailing Address:

   Louisiana Department of Public Safety and Corrections
   Data Processing Center
   8001 Independence Boulevard
   Baton Rouge, LA 70806
   Attention: DMB Project Leader

2. Phone Number : (225) 922-2260

3. Email: Insurance@dps.la.gov

4. Fax Number: (225) 925-4019

AUTHORITY NOTE: Promulgated in accordance with R.S. 32:863.2.

HISTORICAL NOTE: Promulgated by the Department of Public Safety and Corrections, Office of Motor Vehicles, LR 30:2844 (December 2004), amended LR 41:2668 (December 2015).

§1754. General Information

A. Correcting No-Hits. A "Hit" is based on the VIN number. When the VIN does not match with the department's vehicle registration records and fails the VINA check, the record is coded "No-Hit" (Disposition code "U"). In accordance with these rules and regulations, the security provider (insurance company) has 15 business days from the return date of the filing to correct the VIN information and resubmit. If a company provides a VIN for a 1981 or newer vehicle and the department's VINA check determines that the VIN is valid, but the VIN is not available from the department's vehicle registration records, the record is returned as a "Restricted Hit". (Disposition code "R").

B. Reporting an Initiation of Coverage and Cancellation of Coverage at the Same Time. The last record received from a company for a vehicle is considered to reflect the status of the vehicle with the company. Multiple filings for a single vehicle having the same company code and owner-ID will result in the last record received being maintained by the department. Receiving records out of order remains a problem with many companies and may result in cancellation notices being sent to individuals who have insurance. All records must be submitted in chronological order.

C. Recalling Notification. When a security provider discovers that a cancellation or initiation of coverage was reported by mistake, the security provider shall submit to the department a notice of recall of notification. All of the data except the transaction type shall be the same as originally submitted in order to match the recall with the notification. A transaction type "B" will recall an initiation ("A"). A transaction type "1" will recall a termination ("0").

D. Warning on Notice of Acknowledgment of Termination to Insured. The notice of acknowledgment of termination sent to an insured shall contain the following warning notice:

1. If you do not keep your liability insurance in force during the entire registration period, your registering privileges will be subject to revocation. By law your insurance carrier is required to report specific termination information to the Commissioner of the Department of Public Safety and Corrections.

E. Timely Insurance Filings. In accordance with these rules and regulations, the security provider must notify the department when motor vehicle security is begun, issued or procured or after motor vehicle security is ended, recalled, reinstated, terminated, canceled or changed from a binder status to an active policy number. Such notification must be made within 15 business days from the issue date. The security provider has 15 business days from receipt of the department's returned filings to correct any "No-Hit" records and resubmit. Termination filings received prior to the effective date will result in an edit error (Disposition code "E"). An edit error is not an acceptable filing. Edit errors must be corrected and resubmitted. It is the responsibility of the insurance company or servicing agent to review and take the necessary corrective action as required by these rules and regulations. An initiation or termination filing will be considered late if the date received is more than 15 business days after the issue date. Any filings considered late will be returned with the LATE-FLAG set to "Y".

1. Possible Policy Scenarios. If a policy lapses and is then later reinstated, with a lapse, submit a termination. Whenever the policy is re-issued, send in the initiation with the new initiation date, not the date that the policy was initially issued.

a. If insurance coverage lapses and is reinstated without a lapse and a termination has been submitted, recall the termination. Do not send in a new initiation.

b. If insurance coverage lapses and is reinstated without a lapse and a termination was not submitted, no filings are required. Only valid terminations should be reported.

c. If the policy number changes or if the policy is renewed without any owner ID or vehicle or company (NAIC number) changes, then a filing is not required.

2. The department will monitor this area of the reporting requirements. Those security providers who violate this provision will be subject to possible fee assessments.

F. Manual Filings. Effective January 1, 2005 the department will no longer accept manual filings.

G. Fleet Filings—Guidelines for Fleet Filings

1. Eligibility. Any insurance company writing motor vehicle liability insurance in Louisiana and insuring a fleet of five or more vehicles registered in Louisiana for which VIN information is not maintained on each vehicle must electronically report said fleet coverage as specified in these rules and regulations. If the insurance company maintains the VIN number of each vehicle within the fleet, the filing must be reported on a vehicle by vehicle basis.

2. Conditions of Filing. A security provider must notify the department after motor vehicle liability security is begun, ended or in certain ways modified. Such notification shall be made within 15 business days of the issue date of initiation termination of coverage. After the initiation has been reported, the cancellation is not to be reported until the entire Fleet policy has been canceled. (Do not report the addition or deletion of individual vehicles.)

3. Format. Each notification must be transmitted electronically using the formats provided in these Rules and Regulations.

4. Number of Vehicles. The estimated number of vehicles in a fleet is reported in lieu of VIN information on a vehicle by vehicle basis.

H. Fee Assessments

1. The Louisiana Department of Public Safety and Corrections is charged with administering and enforcing all compulsory insurance provisions. In so doing, we must rely on the cooperation of the insurance industry to provide timely, complete and accurate information in accordance with R.S. 32:863.2 and these rules and regulations.

2. Failure to report the required information and/or failure to report the required information timely can result in the insurance company being assessed a fee. If any of acceptable filings (Disposition codes Hit and Restrict Hit) are considered late, a fee of $50 may be assessed for each of these late filings. A fee of $50 may be assessed for each failure to report.

3. This state's vehicle registration records will be checked against liability security insurance records on an ongoing basis. Fees will be assessed to those companies in non-compliance with the statute and these rules and regulations. Further, in cooperation with the Department of Insurance, continuous violations and non-compliance could result in additional administrative or judicial action.

4. Fees will not be assessed to those security providers who continue to report all insured vehicles, as well as reporting them in a timely manner.

I. Transaction Types and How They are Used. Described below are the transaction types and how each may be used:

1. 0-Termination. A termination or cancellation notice is submitted whenever liability security is canceled or terminated.

2. 1-Recall of Termination. The recall of transaction type "0" is used whenever a cancellation notice has previously been sent in error.

> Example: A cancellation notice was incorrectly reported. The cancellation date was reported as February 2 instead of February 13. A recall of the February 2 cancellation notice is submitted followed by a cancellation notice having a cancel date of February 13.

3. 6-Termination for NSF Check. A termination or cancellation notice pursuant to this code is submitted whenever a security provider backdates the effective date of a cancellation because the insurer paid with a check that was returned by the bank more than 15 days after the effective date of the policy.

4. 7-Termination for Rescinded/Canceled Sale. A termination or cancellation notice is submitted whenever liability security is canceled or terminated as a result of a rescinded or canceled sale of the vehicle.

5. A-Initiation. An initiation notice is submitted whenever liability security is initiated (new business) on a vehicle. If there is a lapse in coverage, a termination notice must be submitted followed by an initiation notice showing the new initiation or reinstated date.

6. B-Recall of Initiation. The recall of transaction type "A" is used whenever an initiation notice is submitted in error.

> Example: An initiation notice was incorrectly reported. The starting date was reported as February 2 instead of February 13. A recall of the February 2 initiation notice is submitted followed by an initiation notice having a starting date of February 13.

7. F-Change. A change notice is submitted only for changing the policy number from "BINDER" to an active policy number.

> Example: An initiation notice was submitted with a policy number of "BINDER". A change notice is submitted with an active policy number.

J. Disposition Codes. Described below are the disposition codes returned and how they are used.

1. D-Duplicate Reporting. This record was previously reported to the department with the same information. This record has been rejected by the department. It is not necessary to re-report the same record again after it was successfully reported.

2. E-Edit Error. This record is not acceptable due to the absence of information in a required field or invalid information in a field. This record has been rejected by the department. The EDIT-ERROR-MASK field needs to be evaluated to determine the field(s) that requires amendment. After the field(s) have been corrected this record shall be re-reported.

3. H-Hit. This record has been accepted by the department. This record's VIN matches a vehicle that requires compulsory liability security and is currently registered in Louisiana.

4. I-Incorrect Vehicle "Type Use" or "Class". This record has been rejected by the department. The "type use" or "class" of this vehicle record is such that it does not have to be reported to the department. An example of this type of vehicle is a trailer.

5. P-Prescribed. This record is not acceptable because the date in the TERMINATION-OR-CHANGE-OR-EFFECTIVE-DATE or ISSUE-DATE field is more than 18 months old. This record has been rejected by the department.

6. R-Restricted Hit. This record has been accepted by the department. The VIN of this record does not match a vehicle currently registered in Louisiana that requires compulsory insurance; however, the VIN reported passes the VINA edit routine. This record should be verified using the vehicle registration certificate.

7. S-Sequence Error. This record has been rejected by the department. The record has been reported out of sequence. Examples are: reporting a transaction type "0" (termination) prior to having reported a transaction type "A" (initiation). Records shall be reported in chronological order.

8. U-No-Hit. This record has been rejected by the department. The VIN of this record does not match a vehicle currently registered in Louisiana. The VIN does not pass the VINA edit routine. The record should be verified using the vehicle registration certificate.

K. Contact Person Information

1. Certain information is needed periodically by this agency to facilitate communication with security providers. The contact information sheet is to be completed and returned to the department during the month of January each year and whenever there is a change involving contact personnel. A contact information sheet shall be submitted for each insurance company.

2. Please furnish the name of the representative responsible for compliance:

a. administrative reporting requirements;

b. information technology/information services/data processing;

c. commercial lines;

d. personal lines;

e. fleet filings;

f. other personnel responsible for filings or fee assessment.

L. Contact Person Information Sheet (CPIS). A CPIS shall be completed by every insurance company:

CONTACT PERSON INFORMATION SHEET

LA. OFFICE OF MOTOR VEHICLES

COMPULSORY INSURANCE UNIT

P.O. BOX 64886

BATON ROUGE, LA 70896

Certain updated information is needed periodically by this agency in order for us to contact the correct person within your insurance company to provide the most updated information or to correct problem areas.
The contact information sheet is to be completed and returned to this department. The contact sheet must be submitted during the month of January each year and whenever there is a change in any of your company's contact personnel.
A contact information sheet must be submitted for each insurance company.
Please furnish the name of the representative for compliance with administrative reporting requirements, data processing, commercial lines, personal lines, fleet filings and other personnel responsible for filings or fee assessments.
This information will assist us in contacting your company's representative(s) in regard to specific compliance regulations:

NAIC# NAME OF INSURANCE COMPANY

ADMINISTRATIVE COMPLIANCE	DATA PROCESSING
NAME:	NAME:
ADDRESS:	ADDRESS:
PHONE: ( )	PHONE: ( )
FAX: ( )	FAX: ( )
E-MAIL ADDRESS:	E-MAIL ADDRESS:

AREA OF RESPONSIBILITY	AREA OF RESPONSIBILITY
NAME:	NAME:
ADDRESS:	ADDRESS:
PHONE: ( )	PHONE: ( )
FAX: ( )	FAX: ( )
E-MAIL ADDRESS:	E-MAIL ADDRESS:

AUTHORITY NOTE: Promulgated in accordance with R.S. 32:863.2.

HISTORICAL NOTE: Promulgated by the Department of Public Safety and Corrections, Office of Motor Vehicles, LR 30:2845 (December 2004), amended LR 41:2669 (December 2015).

§1756. Reporting Instructions [Formerly §1768]

A. The Louisiana Department of Public Safety and Corrections has two acceptable methods of exchanging electronic data for compulsory liability insurance reporting.

B. One method is to utilize GXS's "information exchange" service. The "information exchange" service will allow secure electronic data transfer between the department and each insurance company. The "information exchange" service gives you the option of submitting multiple filings per day. A message class should be used when sending files via GXS to the test or production mailbox. The message class for uncompressed files is LAPS however the department no longer accepts compressed files. The following outlines steps necessary to begin participating in this electronic transfer. Assistance in implementing the insurance company's part of this electronic relationship will be provided by the marketing and enabling support function which can be reached at (877) 326-6426. The department's mailbox (account-number/user-id) is: "LAPS/LAPSS67" for test; "LAPS/LAPSS68" for production. Please do not send more than 50,000 records at one time. For more records, split the file into smaller parts and send these individually. Each part must contain one header and one trailer.

1. A test filing shall be submitted for all new companies. Please ensure that the test files are sent to the test mailbox (LAPS/LAPSS67) and that all testing has been completed before sending a file to the production mailbox.

2. Network Connectivity/Mailbox. Security providers that currently have connectivity to GXS, either through Insurance Value Added Network Services ("IVANS" phone number (800) 548-2675) or directly, must ensure that their network account is attached to the "information exchange" service. Marketing and Enabling Support can verify this for you. If you do not currently have an account with GXS and would like one, or if you currently access a mailbox for which restrictions prevent use of that mailbox in this effort, you can obtain an account. Please contact Marketing and Enabling Support at the number noted above.

3. Cost Information. Information for costs related to participation in this activity (network charges, software charges, etc.) will be provided by the individuals/groups noted above. Costs incurred through participation in this electronic transfer of data will be the responsibility of the filing security provider, not the department.

4. After contacting GXS, please provide the department with the NAIC number, account number and user ID at Insurance@dps.la.gov.

C. The second method is the state of Louisiana's free DMZ MoveIt server. You may only submit one filing per day. The following outlines the steps necessary to begin participating in this method of electronic transfer. You will need to contact the department at Insurance@dps.la.gov to obtain a security form. This form must be completed, signed, scanned and emailed back to the department for processing. An account will be created for you. Once the account is created you will receive a flow chart with the file names required for you to submit your filings and to retrieve your return error files. You will be required to submit a test file. If the test file is successful then you will be able to go to production.

D. General Information

1. All record formats for electronic transfer will be as described below in the section entitled record formats.

2. The department will retrieve filings only once per day. Any filing not sent before this retrieval time will be considered filed on the next day.

3. After processing, information will be returned to the appropriate GXS mailbox or DMZ MoveIt server folder. The returned data will then be ready to be accessed by the insurance company.

4. Please process the return files prior to sending in any additional files.

E. File Transfer. The department will transfer all files using the FTP protocol. Therefore all files will need to be placed in the department's mailbox using FTP or in FTP ASCII format which uses a CRLF (carriage return line feed) pair as the end-of-line character sequence.

F. Record Processing

1. The filing record will have: a header record, filing records (individual vehicle or fleet) and a trailer record. The trailer record will consist of all 9's from character 1 through character 219. Character number 220 of the trailer record should have a transaction type of "2". After processing the filing records, the department will return the filing report to the insurance company's GXS mailbox or DMZ MoveIt server folder. The report will consist of: the header record, filing records with dispositions and late flags and a trailer record containing summary totals.

2. Upon receipt, filings will be edited for the purpose of verification of format and reporting requirements identifying missing or invalid data. Accepted records (those without edit errors) will then be compared by VIN with departmental vehicle registration files. After these steps, records that do not result in a match will be considered unresolved. It is the responsibility of the insurance company to read the returned filing. No-Hit (Disposition code "U") and Edit-Error (Disposition code "E") exceptions must be corrected and re-submitted within fifteen (15) business days from the receipt of the returned filing. If an Out-of-Sequence (Disposition code "S") error is received contact the department as soon as possible before trying to make corrections to avoid filing errors that cannot be corrected.

G. Record Formats

1. There are four types of records: header, individual vehicle filing, fleet filing and trailer.

2. A header record must be the first record on filings submitted to the department. This record contains information pertaining to a particular filing as well as the account number and user-id of the reporting service agent. This information is critical for preparing the department's return report. The header record will be the first record on the department's return report and will have a record type of "3".

3. An individual vehicle filing record is used by an insurance company for reporting required liability security information for an individual vehicle. This filing record will have a record type of "1".

4. A fleet filing record is used by an insurance company for reporting required liability security information for a fleet of vehicles. This filing record will have a record type of "4".

5. Header Record

a. The header record has a record type = "3" and it will be edited for errors. It must be the first record on the filing. Filings will not be processed if the header record does not pass all edit checks. If an error is encountered, the header record will be the only record written to the return report. Character positions (194-218) of the header will have an EDIT-ERROR-MASK. The field(s) in error must be corrected and the record(s) re-submitted for processing.

b. Header Record Field Descriptions

i. SERV-AGENT-CODE—code for an insurance company preparing its own filing, or a department-supplied number. The service agent code must be the same throughout the entire filing report.

ii. NR-FILING-RECORDS—number of filings records, excluding header and trailer records. An accurate count for this field is not required. It must have 6 digits but it can be 6 zeros.

iii. DATE-CREATED—date the filing report was created. Use format CCYYMMDD.

iv. TEST-FILE—indicator to determine if filing report is production or test. Use "Y" for test data or "N" for live data. If the indicator is "Y", filing reports for GXS must be sent to the Test mailbox ("LAPS/LAPSS67").

v. COMPRESSION—use "N" for uncompressed.

vi. ACCOUNT-NUMBER—the account number (assigned to the company by the GXS or the department).

vii. PERIOD—the character ".".

viii. USER-ID—the user ID (assigned to the company by the GXS or the department).

ix. INS-CO-USAGE—this field is for insurance company usage.

x. FILLER—unused. Should be space filled.

xi. EDIT-ERROR-MASK—used by the department to identify fields in error if the disposition code is "E".

xii. DISPOSITION—if the header record is acceptable will be a SPACE, if the header record is unacceptable will be "E".

xiii. RECORD-TYPE—use a "3".

c. The following fields are required, and the absence of any of these key data fields or the presence of invalid data in any of the key data fields is an edit error which precludes the department from processing any filing records on the submission.

i. SERV-AGENT-CODE

ii. NR-FILING-RECORDS

iii. DATE-CREATED

iv. TEST-FILE

v. COMPRESSION

vi. ACCOUNT-NUMBER

vii. PERIOD

viii. USER-ID

ix. RECORD-TYPE

d. Returning Edit Errors. For a header record with an "E" disposition, the EDIT-ERROR-MASK field will be used to indicate the fields in error. Positions are as follows.

i.	SERV-AGENT-CODE	194
ii.	NR-FILING-RECORDS	195
iii.	DATE-CREATED	196
iv.	TEST-FILE	197
v.	COMPRESSION	198
vi.	ACCOUNT-NUMBER	199
vii.	PERIOD	200
viii.	USER-ID	201
ix.	RECORD-TYPE	202

e. A value of "1" in any of the above character positions in Subparagraph "d" above signifies an error in the corresponding item. For example, if the SERV-AGT is missing, character position 194 will have a value of "1". A value of "0" in any character position of the EDIT-ERROR-MASK signifies that the corresponding item passed the edits.

6. Individual Vehicle Filing Record

a. An individual vehicle filing record identifies the vehicle for which liability security has been issued, procured, recalled, reinstated, terminated, canceled or changed from binder status to an active policy. Every individual vehicle filing record in the RETURN FILING REPORT is to be reviewed. Duplicate reportings (Disposition code "D") are not to be re-reported to the department. Edit errors (Disposition code "E") are to be corrected and re-reported to the department within 15 business days of the return-date. Hits (Disposition code "H") are acceptable. Incorrect "type use" or "class" (Disposition code "I") are not to be re-reported to the department. Prescribed (Disposition code "P") are not to be re-reported to the department. Restricted-Hit (Disposition code "R") are to have the "VIN" verified with the "vehicle identification number" field from the vehicle registration certificate. If the "VIN" reported matches the "vehicle identification number" on the vehicle registration certificate, do not re-report. If the

"VIN" reported does not match the "vehicle identification number" on the vehicle registration certificate, re-report with the correct "VIN". Sequence errors (Disposition code "S") must be researched to determine if the record needs to be resubmitted with necessary changes. Records must be reported in chronological order. No-Hit (Disposition code "U") are to have the "VIN" verified with the "vehicle identification number" field from the vehicle registration certificate, corrected and re-reported with the correct "VIN"; this is not an acceptable reporting.

b. Individual Vehicle Filing Record Field Descriptions

i. VIN—"vehicle identification number" field from the vehicle registration certificate.

ii. INS-COMP-CODE—NAIC Code (best's insurance reports property-casualty).

iii. TRANSACTION-TYPE—see Section III.I. (Transaction Types and How They Are Used).

iv. INS-POLICY-NR—policy number.

v. TERMINATION-OR-CHANGE-OR-EFFECTIVE-DATE—date insurance coverage on VIN was canceled, terminated, changed or became effective. Use format CCYYMMDD.

vi. SERV-AGENT-CODE—use only one servicing agent code throughout the filing. Companies preparing their own filings are to use the NAIC code for the company reporting. Servicing Agents preparing filings for multiple companies shall use their SERV-AGENT-CODE throughout the entire filing and use the NAIC code for the insurance company that is issuing the liability security policy in the INS-COMP-CODE field.

vii. LESSEE-OR-OWNER-STATE—a two-character abbreviation for the state that issued the driver's license. If the "LESSEE-OR- OWNER-IDENTIFICATION-NUMBER" contains the federal tax identification number, the LESSEE-OR-OWNER-STATE field is spaces.

viii. LESSEE-OR-OWNER-IDENTIFICATION-NUMBER—the lessee or owner identification number can be either a driver's license number or a federal tax identification number. The "DRIVER'S LICENSE/EIN" field as it appears on the vehicle registration certificate should contain the correct number. For individually owned vehicles, use the driver's license. For company owned vehicles, use the federal tax identification number.

ix. ISSUE-DATE—date the policy was issued or terminated for a vehicle. When reporting an initiation for a new vehicle added to an existing policy, make sure that the issue date used is the date the vehicle was added to the policy, not the issue date of the original policy. Use format CCYYMMDD.

x. INS-CO-USAGE—this field is for insurance company usage.

xi. FILLER—spaces. No special characters.

xii. RETURN-DATE—this field will be populated by the department with the date the record was processed and returned to the reporting company. Use format CCYYMMDD.

xiii. LATE-FLAG—indicates if filing record was late. This field will be populated by the department. Any filing that is late will have this field set to "Y".

xiv. EDIT-ERROR-MASK—used to identify edit errors that are being returned to the company. For filing records with DISPOSITION of "E" the EDIT-ERROR-MASK will identify each field that failed to pass the edits. This field will be populated by the department with a "1" (error) or "0" (no error).

xv. DISPOSITION—code used to determine the acceptance or rejection of a filing record. This field will be populated by the department. See Section III.J (Disposition Codes).

xvi. RECORD-TYPE—use a "1" to identify this record as an individual vehicle filing record.

c. The following fields are required, and the absence of any of these key data fields or the presence of invalid data in any of the key data fields is an edit error which precludes the department from processing this individual filing record.

i. VIN

ii. INS-COMP-CODE

iii. TRANSACTION-TYPE

iv. INS-POLICY-NR

v. TERMINATION-OR-CHANGE-OR-EFFECTVE-DATE

vi. SERV-AGENT-CODE

vii. LESSEE-OR-OWNER-STATE

viii. LESSEE-OR-OWNER-IDENTIFICATION-NUMBER

ix. ISSUE-DATE

x. RECORD-TYPE

d. Returning Edit Errors. For individual vehicle filing records with an "E" disposition, the EDIT-ERROR-MASK field will be used to indicate the fields in error. Positions are as follows:

i.	VIN	194
ii.	INS-COMP-CODE	195
iii.	TRANSACTION-TYPE	196
iv.	INS-POLICY-NR	197
v.	TERMINATION-OR-CHANGE-OR-EFFECTIVE-DATE	198
vi.	SERV-AGENT-CODE	199
vii.	LESSEE-OR-OWNER-STATE	200

viii. LESSEE-OR-OWNER-IDENTIFICATION-NUMBER 201

ix. ISSUE-DATE—only for Initiations 202

x. RECORD-TYPE 203

e. A value of "1" in any of the above character positions signifies an error in the corresponding item. For example, if the TRANSACTION-TYPE is missing, character position 196 will have a value of "1". A value of "0" in any character position of the EDIT-ERROR-MASK signifies that the corresponding item has passed the edits.

7. Fleet Filing Record

a. A fleet filing record is to be used to report the number of vehicles contained within the fleet.

b. Fleet Filing Record Field Descriptions

1. INS-COMP-CODE—NAIC Code (Best's Insurance Reports Property-Casualty)
2. TRANSACTION-TYPE—see Section III.I. (Transaction Types and How They Are Used)
3. INS-POLICY-NR—policy number.
4. TERMINATION-OR-CHANGE-OR-EFFECTIVE-DATE—date policy was canceled, terminated, changed or became effective. Use format CCYYMMDD.
5. SERV-AGENT-CODE—use only one servicing agent code throughout the filing. Companies preparing their own filings are to use the NAIC code for the company reporting. Servicing Agents preparing filings for multiple companies shall use their SERV-AGENT-CODE throughout the entire filing and use the NAIC code for the insurance company that is issuing the liabilitysecurity policy in the INS-COMP-CODE field.
6. LESSEE-OR-OWNER-FEDERAL-TAX-IDENTIFICATION-NUMBER—The lessee or owner Federal Tax Identification Number. Use the 9 digits of the federal tax identification number. This is the "DRIVER'S LICENSE/EIN" FIELD as it appears on the vehicle registration certificate.
7. LESSEE-OR-OWNER-NAME—for leased vehicles ("STATUS" field of the vehicle registration certificate is "LESSEE") this is the "NAME" field as it appears on the vehicle registration certificate. For owned vehicles, this is the "OWNER'S NAME" field as it appears on the vehicle registration certificate.
8. LESSEE-OR-OWNER-ADDRESS—for leased vehicles ("STATUS" field of the Vehicle Registration Certificate is "LESSEE") this is the "STREET1" field below the "NAME" field as it appears on the vehicle registration certificate. For owned vehicles, this is the "STREET1" field below the "OWNER'S NAME" field as it appears on the vehicle registration certificate.
9. LESSEE-OR-OWNER-CITY-STATE—for leased vehicles ("STATUS" field of the vehicle registration certificate is "LESSEE") this is the "CITY/STATE" field below the "NAME" field as it appears on the vehicle registration certificate. For owned vehicles, this is the "CITY/STATE" field below the "OWNER'S NAME" field as it appears on the vehicle registration certificate.
10. LESSEE-OR-OWNER-ZIP-CODE—for leased vehicles ("STATUS" field of the vehicle registration certificate is "LESSEE") this is the "ZIP" field below the "NAME" field as it appears on the vehicle registration certificate. For owned vehicles, this is the "ZIP" field below the "OWNER'S NAME" field as it appears on the vehicle registration certificate.
11. NUMBER-OF-VEHICLES-IN-FLEET—the estimated number of vehicles in the fleet covered by this filing record.
12. ISSUE-DATE—date the policy was issued or terminated.
13. INS-CO-USAGE—this field is for insurance company usage.
14. RETURN-DATE—this field will be populated by the department with the date the record was processed and returned to the reporting company. Use format CCYYMMDD.
15. LATE-FLAG—indicates if filing was late. This field will be populated by the department. Any filing that is late will have this field set to "Y".
16. EDIT-ERROR-MASK—used to identify edit errors that are being returned to the company. For filing records with disposition of "E", the EDIT-ERROR-MASK will identify each field that failed to pass the edits. Each character of this field will be populated by the department with a "1" (error) or a "0" (no error).
17. DISPOSITION—code used to determine the acceptance or rejection of a filing record. This field will be populated by the department. See Section III.J. (Disposition Codes)
18. RECORD-TYPE—use a "4" to identify this record as a fleet filing record.

c. The following fields are required.

i. INS-COMP-CODE

ii. TRANSACTION-TYPE

iii. INS-POLICY-NR

iv. TERMINATION-OR-CHANGE-OR-EFFECTIVE-DATE

v. SERV-AGENT-CODE

vi. LESSEE-OR-OWNER-FEDERAL-TAX-IDENTIFICATION-NUMBER

vii. LESSEE-OR-OWNER-NAME

viii. LESSEE-OR-OWNER-ADDRESS

ix. LESSEE-OR-OWNER-CITY-STATE

x. LESSEE-OR-OWNER-ZIP-CODE

xi. NUMBER-OF-VEHICLES-IN-FLEET

xii. ISSUE-DATE

xiii. RECORD-TYPE

d. Returning Edit Errors

i. For filing records with an "E" disposition, the EDIT-ERROR-MASK field will be used to indicate the fields in error. Positions are as follows:

(a). INS-COMP-CODE 194

(b). TRANSACTION-TYPE 195

(c). INS-POLICY-NR 196

(d). TERMINATION-OR-CHANGE-OR-EFFECTIVE-DATE 197

(e). SERV-AGENT-CODE 198

(f). LESSEE-OR-OWNER-FEDERAL-TAX-IDENTIFICATION-NUMBER 199

(g). LESSEE-OR-OWNER-NAME 200

(h). LESSEE-OR-OWNER-ADDRESS 201

(i). LESSEE-OR-OWNER-CITY-STATE 202

(j). LESSEE-OR-OWNER-ZIP-CODE 203

(k). NUMBER-OF-VEHICLES-IN-FLEET 204

(l). ISSUE-DATE 205

(m). RECORD-TYPE 206

ii. A value of "1" in any of the above character positions signifies an error in the corresponding item. For example, if the TRANSACTION-TYPE is missing, character position 195 will have a value of "1". A value of "0" in any character position of the EDIT-ERROR-MASK signifies that the corresponding item passed the edits.

8. Trailer Record

a. A trailer record is required. The trailer record must contain all 9's for positions 1 through 219 and must have a record type 2 in position 220. After the complete filing has been processed, the department will update the trailer record with statistical information for the records submitted. This record is returned to the insurance company for review.

b. Returned Trailer Record Field Descriptions:

i. Servicing Agent Code

ii. Date Filing was Received by the department \

iii. Date Filing was Processed by the department

iv. Total number of records included in the filing (record types 1 and 4)

v. Total number of records with disposition "D" (Duplicate Reporting)

vi. Total number of records with disposition "E" (Edit Error)

vii. Total number of records with disposition "H" (Hit)

viii. Total number of records with disposition "I" (Incorrect Type-Use or Class)

ix. Total number of records with disposition "P" (Prescribed)

x. Total number of records with disposition "R" (Restricted Hit)

xi. Total number of records with disposition "S" (Sequence Error)

xii. Total number of records with disposition "U" (No Hit)

xiii. Total number of late filings

xiv. Filler

xv. Record-Type – 2

H. Record Format—Insurance Header Record

FIELD CHARACTERISTICS		RECORD NAME INSURANCE HEADER RECORD		SYSTEM Compulsory Insurance Reporting		
A = ALPHABETIC X = ALPHANUMERIC N = NUMERIC (UNSIGNED) USAGE ALL ASCII CHARACTERS				RECORD SIZE 220		
ITEM NO.	FIELD POSITION	FIELD SIZE CHAR.	FIELD CHAR.	JUSTIFIED	FIELD LABEL	DESCRIPTION OR VALUE
1	1 - 5	5	N	Right	Serv-Agent-Code	REQUIRED
2	6 - 11	6	N	Right	NR-Filing-Records	REQUIRED
3	12 - 19	8	N	Right	Date-Created	REQUIRED
4	20	1	X		Test-File (Y or N)	REQUIRED
5	21	1	X		Compression (Y or N)	REQUIRED
6	22 - 28	7	X	Right	Account-Num	REQUIRED
7	29	1	X		Period	REQUIRED
8	30 - 36	7	X	Right	User-ID	REQUIRED
9	37 - 70	34	X		Ins-Co-Usage	
10	71 - 193	123	X		Filler	SPACES
*** THE FOLLOWING FIELDS ARE OMV DATA RETURNED FOR RECORD TYPE = 3 ***						
11	194 - 218	25	X	Left	Edit-Error-Mask	
12	219	1	X	Left	Disposition	
13	220	1	N		Record-Type	3

I. Record Format—Individual Vehicle Filing Record

FIELD CHARACTERISTICS	RECORD NAME INDIVIDUAL VEHICLE	SYSTEM Compulsory Insurance Reporting

A = ALPHABETIC X = ALPHANUMERIC N = NUMERIC (UNSIGNED) USAGE ALL ASCII CHARACTERS		FILING RECORD		RECORD SIZE 220		
ITEM NO.	FIELD POSITION	FIELD SIZE CHAR.	FIELD CHAR.	JUSTIFIED	FIELD LABEL	DESCRIPTION OR VALUE
1	1 - 30	30	X	Right / Space Filled	VIN	REQUIRED
2	31 - 35	5	N	Right	Ins-Comp-Code	REQUIRED
3	36	1	X		Transaction-Type	REQUIRED
4	37 - 66	30	X	Left	Ins-Policy-Nr	REQUIRED
5	67 - 74	8	N	Right	Termination-or-Change-or-Effective-Date (CCYYMMDD)	REQUIRED
6	75 - 79	5	N	Right	Serv-Agent-Code	REQUIRED
7	80 - 81	2	X		Lessee-or-Owner-State	REQUIRED
8	82 - 90	9	N	Right	Lessee-or-Owner-Identification-Number	REQUIRED
9	91 - 98	8	N	Right	Issue-Date (CCYYMMDD)	REQUIRED
10	99 - 132	34	X		Ins-Co-Usage	
11	133 - 184	52	X		Filler	SPACES
*** THE FOLLOWING FIELDS ARE OMV DATA RETURNED FOR RECORD TYPE = 1 ***						
12	185 - 192	8	N	Right	Return-Date	CCYYMMDD
13	193	1	X		Late-Flag	Y or N
14	194 - 218	25	X	Left	Edit-Error-Mask	
15	219	1	X	Left	Disposition	
16	220	1	N		Record-Type	1

J. Record Format—Fleet Filing Record

FIELD CHARACTERISTICS		RECORD NAME FLEET FILING RECORD		SYSTEM Compulsory Insurance Reporting		
A = ALPHABETIC X = ALPHANUMERIC N = NUMERIC (UNSIGNED) USAGE ALL ASCII CHARACTERS				RECORD SIZE 220		
ITEM NO.	FIELD POSITION	FIELD SIZE CHAR.	FIELD CHAR.	JUSTIFIED	FIELD LABEL	DESCRIPTION OR VALUE
1	1 - 5	5	N	Right	Ins-Comp-Code	REQUIRED
2	6	1	X		Transaction-Type	REQUIRED
3	7 - 36	30	X	Left	Ins-Policy-Nr	REQUIRED
4	37 - 44	8	N	Right	Termination-or-Change-or-Effective-Date (CCYYMMDD)	REQUIRED
5	45 - 49	5	N	Right	Serv-Agent-Code	REQUIRED
6	50 - 58	9	N	Right	Lessee-or-Owner-Federal-Tax-	REQUIRED

					Identification-Number	
7	59 - 88	30	X	Left	Lessee-or-Owner-Name	REQUIRED
8	89 - 113	25	X	Left	Lessee-or-Owner-Address	REQUIRED
9	114 - 133	20	X	Left	Lessee-or-Owner-City-State	REQUIRED
10	134 - 138	5	N	Right	Lessee-or-Owner-Zip-Code	REQUIRED
11	139 - 142	4	N	Right	Number-of-Vehicles-in-Fleet	REQUIRED
12	143 - 150	8	N	Right	Issue-Date (CCYYMMDD)	REQUIRED
13	151 - 184	34	X		Ins-Co-Usage	
*** THE FOLLOWING FIELDS ARE OMV DATA RETURNED FOR RECORD TYPE = 4 ***						
14	185 - 192	8	N	Right	Return-Date	CCYYMMDD
15	193	1	X		Late-Flag	Y or N
16	194 - 218	25	X	Left	Edit-Error-Mask	
17	219	1	X	Left	Disposition	
18	220	1	N		Record-Type	4

K. Record Format—Trailer Record

FIELD CHARACTERISTICS		RECORD NAME TRAILER RECORD		SYSTEM Compulsory Insurance Reporting		
A = ALPHABETIC X = ALPHANUMERIC N = NUMERIC (UNSIGNED) USAGE ALL ASCII CHARACTERS				RECORD SIZE 220		
ITEM NO.	FIELD POSITION	FIELD SIZE CHAR.	FIELD CHAR.	JUSTIFIED	FIELD LABEL	DESCRIPTION OR VALUE
1	1 - 5	5	N	Right	Serv-Agent-Code	
2	6 - 13	8	N	Right	Date-Received	CCYYMMDD
3	14 - 21	8	N	Right	Date-Processed	CCYYMMDD
4	22 - 27	6	N	Right	Total-Number-of-Filing-Records	
5	28 - 33	6	N	Right	Total-Number-of-Disposition-D-Records	
6	34 - 39	6	N	Right	Total-Number-of-Disposition-E-Records	
7	40 - 45	6	N	Right	Total-Number-of-Disposition-H-Records	
8	46 - 51	6	N	Right	Total-Number-of-Disposition-I-Records	
9	52 - 57	6	N	Right	Total-Number-of-Disposition-P-Records	
10	58 - 63	6	N	Right	Total-Number-of-Disposition-R-Records	
11	64 - 69	6	N	Right	Total-Number-of-Disposition-S-Records	
12	70 - 75	6	N	Right	Total-Number-of-Disposition-U-Records	
13	76 - 81	6	N	Right	Total-Number-of-Late-Fillings	
14	82 - 219	138	X		Filler	SPACES
15	220	1	N		Record-Type	2

AUTHORITY NOTE: Promulgated in accordance with R.S. 32:863.2.

HISTORICAL NOTE: Promulgated by the Department of Public Safety and Corrections, Office of Motor Vehicles, LR 30:2848 (December 2004), amended LR 41:2671 (December 2015).

§1757. Declaratory Orders and Rulings [Formerly §1789]

A. Any person desiring a ruling on the applicability of R.S. 32:863.2, or any other statute, or the applicability or validity of any rule, to the reporting of initiation and any subsequent change in insurance coverage shall submit a written petition to the assistant secretary for the Office of Motor Vehicles. The written petition shall cite all constitutional provisions, statutes, ordinances, cases, and rules which are relevant to the issue presented or which the person wishes the assistant secretary to consider prior to rendering an order or ruling in connection with the petition. The petition shall be typed, printed or written legibly, and signed by the person seeking the ruling or order. The petition shall also contain the person's full printed name, the complete physical and mailing address of the person, and a daytime telephone number.

B. If the petition seeks an order or ruling on a report submitted to the Office of Motor Vehicles by a security provider, the person submitting the petition shall notify the security provider who submitted the report, if the person submitting the petition is not the security provider. Such notice shall be sent by certified mail, return receipt requested. In such case, the petition shall not be considered until proof of such notice has been submitted to the assistant secretary, or until the person petitioning for the order or ruling establishes that the security provider cannot be notified after a due and diligent effort. The notice shall include a copy of the petition submitted to the assistant secretary.

C. The assistant secretary may request the submission of legal memoranda to be considered in rendering any order or ruling. The assistant secretary or his designee shall base the order or ruling on the documents submitted including the petition and legal memoranda. If the assistant secretary or his designee determines that the submission of evidence is necessary for a ruling, the matter may be referred to a hearing officer prior to the rendering of the order or ruling for the taking of such evidence.

D. Notice of the order or ruling shall be sent to the person submitting the petition as well as the security provider receiving notice of the petition at the mailing addresses provided in connection with the petition.

E. The assistant secretary may decline to render an order or ruling if the person submitting the petition has failed to comply with any requirement in this Section.

AUTHORITY NOTE: Promulgated in accordance with R.S. 32:863.2.

HISTORICAL NOTE: Promulgated by the Department of Public Safety and Corrections, Office of Motor Vehicles, LR 24:1780 (September 1998), repromulgated LR 30:2856 (December 2004), LR 41:2678 (December 2015).

§1758. Invalid Vehicle Type-Use [Formerly §1788]

A. The type-use for a vehicle is in the "CLASS" field of the vehicle registration certificate. Below is a list of invalid "type-use" or "class" of vehicles that are not to be reported to the department.

0109—Shriner Auto
0110—Grotto Auto
0111, 0112, 0113, 0114, 0115, 0116, 0117, 0118, 0147, 0148, 0149—Public Auto
0121, 0122—Consular Auto
0124, 0125—Governor's Staff Auto
0138—US Congressman
0139—US Senator
0205, 0236, 0241—Forest Truck
0209—Shriner Truck
0210—Grotto Truck
0211, 0212, 0213, 0214, 0215, 0216, 0217—Public Truck
0221, 0222—Consular Truck
0224, 0225—Governor's Staff Truck
0242, 0243, 0244, 0245, 0246—Farm Truck
0252, 0253, 0254—Public Truck
0262—Handicap Farm Truck
0305, 0306, 0307, 0311, 0312, 0313, 0314, 0315, 0316—Public Motorcycle
0309—Shriner Motorcycle
0310—Grotto Motorcycle
0409—Shriner Bus
0415, 0416, 0417, 0418, 0419, 0420, 0421, 0422, 0423, 0427, 0428, 0429, 0466, 0467, 0468—Public Bus
0601, 0602—House Trailer
0701, 0722—Trailer
0702, 0733—Boat Trailer
0703—4 Year Trailer
0704—Light Semi Trailer
0705—Trailer Apportioned
0706—Farm Semi Trailer
0707, 0708, 0709, 0723, 0724, 0725—Public Perm Trailer
0710, 0711, 0712—Public Boat Trailer
0713, 0714, 0715—Public 4 Year Trailer
0716, 0717, 0718—Public Light Semi Trailer
0719, 0720, 0721—Public Plate Trailer
0726—Shriner Trailer
0727—Grotto Trailer
0728—Appor Life trailer
0729, 0730—Trailer Life
0731, 0732—Trailer 4 Year
0901, 0902, 0903, 0904, 0905—Off-Road Vehicle

AUTHORITY NOTE: Promulgated in accordance with R.S. 32:863.2.

HISTORICAL NOTE: Promulgated by the Department of Public Safety and Corrections, Office of Motor Vehicles, LR 30:2856 (December 2004), amended LR 41:2678 (December 2015).

§1760. Identification Card Specifications [Formerly §1790]

A. General Information

1. Pursuant to R.S. 32:863, which became effective July 1, 1985, all vehicles registered in the State of Louisiana must contain within the vehicle documentation indicating compliance with the compulsory motor vehicle liability security law. An identification card may be used in lieu of the actual policy as a means of showing evidence of liability insurance coverage.

2. The purpose of developing an approved identification card should be to provide a document to be used as proof of compliance with Louisiana's compulsory insurance laws.

3. Those ID cards, in conformance with the attached specifications, will be accepted as proof of liability insurance by law enforcement and by the Office of Motor Vehicles.

4. In order for the security provider to insure compliance with specification requirements, the security provider shall furnish the department with sample copies of its Louisiana Liability Insurance Identification Card. Mail sample ID cards to:

Department of Public Safety and Corrections
Office of Motor Vehicles
Compulsory Insurance Unit
Post Office Box 64886
Baton Rouge, LA 70896-4886

or

Fax copy to (225)-922-0158
Attention: Supervisor

5. For questions regarding implementation, please call the Compulsory Insurance Unit at (225) 925-7285.

B. Louisiana Identification Card Specifications

1. Size of document need not be uniform.

2. Card should be a one-part form on at least 20 lb. white paper stock.

3. The following general information must be designated on the card in either bold print or contrasting color:

a. Front

i. Louisiana Auto Insurance Identification Card

ii. An insurer authorized to transact business in Louisiana has issued the Motor Vehicle Policy identified hereon. The coverage provided by this policy meets the minimum liability insurance limits prescribed by law.

(a). This wording is necessary to meet requirements without having to specify the actual insurance limits on all vehicles (vehicles under or over 20,000 lbs.).

iii. This card must be carried in the vehicle at all times as evidence of liability insurance

b. Reverse

"IMPORTANT NOTICE

La. R.S. 32:863.1 requires that an operator of a motor vehicle produce upon demand by a law enforcement officer documentation of motor vehicle security which is required to be maintained within the vehicle at all times.

Failure to comply may result in fines, revocation of registration privileges and block against the renewal or issuance of a driver's license."

4. Specific information required on the Identification Card is as follows:

a. Front

i. The name, address and NAIC number of the insurance company.

ii. Name of insured, policy number, effective date and expiration date. When a new vehicle is added to an existing policy, make sure the effective date used is the date the vehicle was added to the policy, not the issue date of the original policy.

iii. Vehicle Description. The year may be shown as two digits and the make may be abbreviated. The full VIN number must be shown. Only when the insurer does not have the VIN information under a fleet policy, is the word "FLEET" to be entered. The Federal Tax identification number of the listed insured must be provided when "FLEET" is used.

b. Front or Back

i. Any excluded driver's on the policy must be listed.

ii. The excluded driver's date of birth and/or operator's license number (optional)

iii. The insurance agent's name, address and telephone number**

(a). In accordance with Act 527 (SB882) R.S. 32:397(A), the insured will be required to furnish proof of insurance to law enforcement at the time of an accident.

5. The certificate should be provided to each liability policy holder at least annually or at each renewal.

6. Other items may be included at the discretion of the insurer such as company logo or any other message(s) including claim locations, what to do in the event of an accident, etc., on the reverse side of the card.

C. Examples of Louisiana Identification Card

LOUISIANA AUTO INSURANCE IDENTIFICATION CARD

An insurer authorized to transact business in Louisiana has issued the Motor Vehicle Policy identified hereon. The coverage provided by this policy meets the minimum liability insurance limits prescribed by law.

NAIC NUMBER COMPANY

POLICY NUMBER EFFECTIVE DATE EXPIRATION DATE

VEHICLE DESCRIPTION
YEAR MAKE/MODEL VEHICLE IDENTIFICATION NUMBER

INSURED

THIS CARD MUST BE IN THE VEHICLE AT ALL TIMES AS EVIDENCE OF INSURANCE

IMPORTANT NOTICE

La. R.S. 32:863.1 requires that an operator of a motor vehicle produce upon demand by a law enforcement officer documentation of motor vehicle security which is required to be maintained within the vehicle at all times.

Failure to comply may result in fines, revocation of registration privileges and block against the renewal or issuance of a driver's

license.

INSURANCE AGENT:

EXCLUDED DRIVERS:

D. Sample Identification Card with Individual Vehicle Information

LOUISIANA AUTO INSURANCE IDENTIFICATION CARD

An insurer authorized to transact business in Louisiana has issued the Motor Vehicle Policy identified hereon. The coverage provided by this policy meets the minimum liability insurance limits prescribed by law.

NAIC NUMBER **COMPANY**
12345 Compulsory Insurance Company
1234 Liability Lane
Security, LA 10000
POLICY NUMBER **EFFECTIVE DATE** **EXPIRATION DATE**
ABC 12345 01/01/2010 01/01/2011
VEHICLE DESCRIPTION
YEAR **MAKE/MODEL** **VEHICLE IDENTIFICATION NUMBER**
2005 Chev/Cam 1GTCE1456PB123456
INSURED
John Doe
203 Doe Street
Baton Rouge, LA 70895
THIS CARD MUST BE IN THE VEHICLE AT ALL TIMES AS EVIDENCE OF INSURANCE

IMPORTANT NOTICE

La. R.S. 32:863.1 requires that an operator of a motor vehicle produce upon demand by a law enforcement officer documentation of motor vehicle security which is required to be maintained within the vehicle at all times.

Failure to comply may result in fines, revocation of registration privileges and block against the renewal or issuance of a driver's license.

INSURANCE AGENT:
All Day Insurance Agency
1000 Anywhere Street
Baton Rouge, LA 70806
Phone # (225) 123-4567
EXCLUDED DRIVERS: Johnny Doe

E. Sample Identification Card with Fleet Information

LOUISIANA AUTO INSURANCE IDENTIFICATION CARD
An insurer authorized to transact business in Louisiana has issued the Motor Vehicle Policy identified hereon. The coverage provided by this policy meets the minimum liability insurance limits prescribed by law.
NAIC NUMBER **COMPANY**
12345 Compulsory Insurance Company
1234 Liability Lane
Security, LA 10000
POLICY NUMBER **EFFECTIVE DATE** **EXPIRATION DATE**
ABC 12345 01/01/2010 01/01/2011
VEHICLE DESCRIPTION
YEAR **MAKE/MODEL** **VEHICLE IDENTIFICATION NUMBER**
FLEET – FEDERAL TAX ID # 720000000
INSURED
John Doe Trucking, Inc.
203 Doe Street
Baton Rouge, LA 70895
THIS CARD MUST BE IN THE VEHICLE AT ALL TIMES AS EVIDENCE OF INSURANCE

IMPORTANT NOTICE

La. R.S. 32:863.1 requires that an operator of a motor vehicle produce upon demand by a law enforcement officer documentation of motor vehicle security which is required to be maintained within the vehicle at all times.

Failure to comply may result in fines, revocation of registration privileges and block against the renewal or issuance of a driver's license.

INSURANCE AGENT:
All Day Insurance Agency
1000 Anywhere Street
Baton Rouge, LA 70806
Phone # (225) 123-4567
EXCLUDED DRIVERS: N/A

AUTHORITY NOTE: Promulgated in accordance with R.S. 32:863.2.

HISTORICAL NOTE: Promulgated by the Department of Public Safety and Corrections, Office of Motor Vehicles, LR 30:2856 (December 2004), amended LR 41:2678 (December 2015).

§1762. Proof of Liability Security [Formerly §1792]

A. In accordance with Act 423 (HB1366) R.S. 32:862(B)(H), licensed drivers and motor vehicle owners will be required to show proof of liability coverage at the time of vehicle registration, renewal of license plate and at the time of initial application, renewal or change of address/endorsement for a driver's license. Acceptable proof of insurance will be in the form of one of the following.

1. For vehicles with a gross vehicle weight of 20,000 pounds or under:

a. proof that a liability insurance policy providing at least $15,000/$30,000 bodily injury and $25,000 property damage as provided in R.S. 32:900(B) was issued. (Copy of insurance identification card, copy of insurance policy or copy of declaration page of insurance policy); or

b. proof that an approved motor vehicle liability bond was issued by a surety or insurance company in the amount of $30,000; or

c. proof that a certificate was issued from the state treasurer stating that cash or securities of $55,000 was on deposit with the state treasurer; or

d. proof that a Louisiana certificate of self-insurance was issued under R.S. 32:1042.

2. For vehicles with a gross vehicle weight of 20,001-50,000 pounds:

a. proof that a liability insurance policy providing at least $25,000/$50,000 bodily injury and $25,000 property damage as provided in R.S. 32:900(B) was issued. (Copy of insurance policy or copy of declaration page of insurance policy); or

b. proof that a Louisiana certificate of self-insurance was issued under R.S. 32:1042 (Act 34 of the First Extraordinary Special Session of 1996); or

c. proof of single state registration (current form RS-3); or

d. proof of Public Service Commission authority (current intra-state ID cab card); or

e. proof that a certificate of self-insurance was issued by the Interstate Commerce Commission (ICC) under R.S. 32:900(M)(3).

3. For vehicles with a gross vehicle weight over 50,001 pounds:

a. proof that a liability insurance policy providing at least $100,000/$300,000 bodily injury and $25,000 property damage or combined single limit of $300,000 as provided in R.S. 32:900(B) was issued. (Copy of insurance policy or copy of declaration page of insurance policy); or

b. proof that a Louisiana certificate of self-insurance was issued under R.S. 32:1042 (Act 34 of the First Extraordinary Special Session of 1996); or

c. proof of single state registration (current form RS-3); or

d. proof of Public Service Commission authority (current intra-state ID cab card); or

e. proof a certificate of self-insurance was issued by the Interstate Commerce Commission (ICC) under R.S. 32:900(M)(3).

AUTHORITY NOTE: Promulgated in accordance with R.S. 32:863.2.

HISTORICAL NOTE: Promulgated by the Department of Public Safety and Corrections, Office of Motor Vehicles, LR 30:2858 (December 2004), amended LR 41:2680 (December 2015).

Subchapter C. Compulsory Insurance Enforcement

§1766. Introduction

A. The Louisiana Legislature enacted law R.S. 32:863.2(F) requiring the Louisiana Department of Public Safety (DPS) to create an online insurance verification system. DPS (Louisiana State Police and the Office of Motor Vehicles) is implementing the Louisiana insurance verification system (LAIVS) in order to meet the law's requirements and provide the Louisiana State Police (LSP), Office of Motor Vehicles (OMV), State Courts, Law Enforcement Agencies, and other authorized users with the ability to perform real-time insurance verification. LAIVS will utilize the Insurance Industry Committee on Motor Vehicle Administration (IICMVA) standards for insurance provider reporting.

B. DPS has partnered with a contracted vendor, MV Solutions Inc., to implement LAIVS. This new system will interface with various state computer systems and networks.

C. Louisiana (LA) licensed insurance providers will be required to make motor vehicle liability insurance information available to LAIVS in the manner defined below for vehicles registered in LA.

D. Insurance providers are required to continue reporting notification of initiation, termination, or modification of liability security to the current LA insurance reporting system. The state intends to replace the current reporting system after successful implementation of LAIVS in a subsequent phase of this project that will be part of a separate procurement solicitation from prospective contractors.

E. LAIVS reporting requirements are summarized below.

1. Insurance providers covering 500 or more vehicles registered in LA must establish a web service that will allow LAIVS instant direct verification of insurance.

a. The web services shall be in compliance with the specifications and standards of the Insurance Industry Committee on Motor Vehicle Administration (IICMVA).

b. Insurance providers issuing commercial policies who capture the VINs shall comply with the web service requirement unless they have been granted an exemption by the commissioner of OMV.

2. All insurance providers writing private passenger and commercial motor vehicle policies in LA are required to report specified policy, vehicle, and customer information [referred to as the Book of Business (BOB)] to LAIVS.

a. Insurance providers must submit BOB data to LAIVS at least once a calendar month. Insurance providers who are not hosting a web service or whose web service do not support VIN broadcasting must provide BOB data on a weekly basis. This data will be used by LAIVS to route instant or real-time verification queries.

b. Unless an insurance provider issues coverage for less than 500 vehicles registered in LA, the insurance provider must submit BOB data to LAIVS via the file transfer protocol (FTP) process outlined in this guide. Insurance providers issuing coverage for less than 500 vehicles can either FTP the BOB file or utilize the LAIVS website for BOB reporting.

c. The vehicle identification number (VIN) will not be required for fleet policies. A fleet policy is a policy insuring a business with a fleet of five or more vehicles registered in LA for which VIN information is not maintained on each vehicle. However, if the insurance provider does maintain the VIN of the vehicles within the fleet, the VINs must be reported in the book of business file.

F. Insurance Provider Compliance Timeline

1. By September 21, 2015—insurance providers register on the LAIVS website.

2. By November 20, 2015—insurance providers submit a test BOB file to LAIVS and begin web services testing. Insurance providers with existing web services active in other jurisdictions can use their production web services for testing

3. By February 23, 2016—insurance providers move to a production environment, including BOB data submission and web services (if applicable). Insurance

providers are encouraged to move to production earlier as state users will begin using LAIVS for insurance verification before this deadline.

G. As previously stated, insurance providers are required to continue reporting notification of initiation, termination, or modification of liability security to the current LA insurance reporting system. The state intends to replace the current reporting system after successful implementation of LAIVS in a subsequent phase of this project that will be part of a separate procurement solicitation from prospective contractors.

H. This guide is posted on the LAIVS website. Go to www.LAIVS.org, click on the HELP link, and then on Help For Insurance Providers. If you have any questions, please contact the LAIVS help desk at support@LAIVS.org.

I. Insurance providers are responsible for reading and complying with this entire document and reviewing additional information posted on the www.LAIVS.org website.

AUTHORITY NOTE: Promulgated in accordance with R.S. 32:863.2.

HISTORICAL NOTE: Promulgated by the Department of Public Safety and Corrections, Office of Motor Vehicles, LR 41:2681 (December 2015).

§1767. Book of Business Reporting

A. Insurance providers must submit book of business (BOB) files to LAIVS by the seventh calendar day of each month. Insurance providers whose web services do not support VIN broadcasting or are not hosting a web service must provide BOB data on a weekly basis. Insurers providing weekly BOB data can submit the data on any day of the week including the weekend. Insurance providers that issue coverage for less than 500 vehicles in Louisiana shall either submit BOB files via FTP or report BOB data using the LAIVS website. Follow the guidelines and procedures explained in the sections below when providing the BOB files to LAIVS.

B. BOB Data to Be Reported. Report the following information when submitting the BOB files:

1. all active LA motor vehicle insurance policies with the minimum liability coverage required by the state of Louisiana and the associated vehicles and customers;

2. both private passenger and commercial motor vehicle insurance policies shall be reported. The VIN is not required for fleet policies. A fleet policy is a policy insuring a business with a fleet of five or more vehicles registered in LA for which VIN information is not maintained on each vehicle. However, if the insurance provider does maintain the VIN of the vehicles within the fleet, the VINs must be reported in the book of business file;

3. the vehicle types that should be reported are provided in Appendix C.

C. BOB File Structure. The BOB file structure is based upon Version 1.1 of the Insurance Data Transfer Guide published by the IICMVA on August 23, 2011. The BOB file is a text file with rows of fixed length. All rows will be 300 characters long with spaces used as filler. Follow each row with a carriage return line feed character (Hexadecimal ‘0D 0A’). Submit a separate file for each NAIC number.

1. File Name. The file name should include the following fields.

a. NAIC Number: Insurance provider’s NAIC Number

b. File Creation Date: Date file was created in the YYYYMMDD format

c. Environment: “P”—Production; “T”—Test

d. Extension: File extension such as “pgp”, “asc”, ”txt” or any other 3 character file extension

e. File Name format should be in the *NAIC_ Date_Environment.extension* format. For example: 12345_20110815_P.pgp

2. Detail Rows. The detail rows show the policy data being submitted by the insurance provider. Generate one record per customer, vehicle, and policy combination. For example, if policy number 12345 is associated with customers Jane and John Doe on a 2004 Jeep and a 2005 GMC, then four records with the following combinations should be created.

a. Jane Doe, 2004 Jeep, policy 12345

b. Jane Doe, 2005 GMC, policy 12345

c. John Doe, 2004 Jeep, policy 12345

d. John Doe, 2005 GMC, policy 12345

e. Each field’s length is specified in the table below with any unused length filled by trailing spaces. Any fields for which a value is not being provided should be filled with spaces. Provide the following fields in each row.

Field Id	Field Name	Length	Begin	End	Type (AN –Alpha numeric N- Numeric)	Mandatory/ Optional	Description
1	POLICY TYPE	2	1	2	AN	M	‘VS’ = Vehicle Specific ‘NS’ = Non Vehicle Specific (Fleet Policies)
2	NAIC	5	3	7	N	M	NAIC Code
3	POLICY NUMBER	30	8	37	AN	M	Policy Number
4	EFFECTIVE DATE	8	38	45	N	M	Effective Date – YYYYMMDD format Date coverage was added for the vehicle. There should not be any time out of force (lapse of coverage) between the Effective

Field Id	Field Name	Length	Begin	End	Type (AN –Alpha numeric N- Numeric)	Mandatory/ Optional	Description
							Date and the transmission date. If the vehicle had any time out of force, then the effective date that coverage was resumed or reinstated should be reported.
5	VIN	25	46	70	AN	O	VIN (optional for non-vehicle specific fleet policy)
6	LAST NAME or ORGANIZATION	40	71	110	AN	M	
7	PREFIX NAME ABBR	3	111	113	AN	O	
8	MIDDLE NAME	20	114	133	AN	O	
9	FIRST NAME	40	134	173	AN	O	Mandatory if customer is an individual
10	SUFFIX NAME	3	174	176	AN	O	Abbreviated Name Suffix (JR, SR, etc.)
11	FEIN	9	177	185	AN	O	
12	ADDRESS	50	186	235	AN	M	
13	CITY	35	236	270	AN	M	
14	STATE	2	271	272	AN	M	
15	ZIP	5	273	277	N	M	
16	COMMERCIAL INDICATOR	1	278	278	AN	O	"Y" for commercial policies
17	FILLER	1	279	279	AN	O	
18	POLICY EXPIRATION DATE	8	280	287	N	O	Future expiration/renewal date of the current policy term. Format is YYYYMMDD.
19	FILLER	13	288	300	AN	M	Space Filled

3. Trailer Row. Each file should have one trailer row with the following fields.

Field Name	Length	Begin	End	Type	Mandatory/ Optional	Description
TYPE	2	1	2	AN	M	TR' = Trailer
RECORD COUNT	12	3	14	N	M	Record count not including Trailer Record
PROCESS DATE	8	15	22	N	M	Date the file was created – YYYYMMDD Format
FILLER	278	23	300	AN	M	Space Filled

D. BOB File Submission. Each insurance provider will be assigned an FTP account (see Section 2.5). There will be two folders under each FTP account. Place all BOB files into the BOB_Inbound folder. All return files created by LAIVS in response to the BOB files will be placed in the BOB_Outbound folder.

E. BOB Return Files Generated for Insurance Providers. This section describes the types of files that may be generated by LAIVS and placed in the BOB_Outbound folder of the insurance provider. These files will inform insurance providers if their files were successfully processed or if any errors were encountered in the processing. For each BOB file submitted by the insurance provider, at least one of the following files will be generated by LAIVS:

1. OK File. If there are no errors in the BOB file submitted by the insurance provider, an OK file will be generated. The OK file name will be named OK_*NAIC_DatetimeStamp*.pgp (e.g. OK_12345_ 20110806121501.pgp).

2. Decryption Error File. This file will be generated if a PGP decryption error occurs. Decryption errors can happen for the following reasons.

a. File sent by insurance provider was not encrypted.

b. File sent by insurance provider was improperly encrypted.

c. File sent by insurance provider was encrypted using the wrong PGP key.

d. Decryption error file will be identified based on the file name prefix DE. The file will be named DE_*NAIC_DatetimeStamp*.pgp (e.g. DE_12345_ 20110806121501.pgp).

3. Reject File. This file will be generated if LAIVS cannot read the file or if the file is improperly formatted and the whole file is being rejected. The file may be rejected for the following reasons.

a. File is not formatted properly.

b. Trailer has a non-zero record count but detail records of the file are missing.

c. Length of each record (line) is not up to the length specified in this guide.

d. End of a record missing carriage return and line feed (Hexadecimal '0D 0A').

e. The reject file will contain the description of the error at the top followed by the contents of the file.

f. The reject file can be identified based on the file name prefix REJ. File will be named REJ_ *NAIC_ DatetimeStamp* (e.g. REJ_12345_ 20110806121501.pgp).

4. Row Error File. Row error files are generated when the overall file format sent by the insurance provider is okay but some of the rows have errors including:

a. mandatory fields missing;

b. invalid field formats;

c. the row error file will contain only the records that are in error. The remaining records sent with the original file will be processed by LAIVS and will not appear in the file. Each error record will have the original row sent by the insurance provider followed by a 3 digit Error Code. The format of the Error Code will be E followed by the Field ID of the invalid/missing field. For example, the Error Code for a row with an invalid NAIC number will be "E02". A complete list of Error Codes is provided in Appendix D;

d. the Row Error file can be identified based on the file name prefix ERR. File will be named ERR_ *NAIC_ DatetimeStamp* (e.g. ERR_12345_20110806121501.pgp);

5. VIN No-Match File. The VIN No–Match files are generated if any of the VINs submitted by the insurance provider do not match VINs of vehicles registered in LA. The VIN No-Match file will include all the records where the VIN did not match. Each record will have the original row sent by the insurance provider followed by "E05", the 3 digit Error Code indicating VIN mismatch. VIN No-Match files are sent to insurance providers for informational purposes and insurance providers are not required to take action based on these files.

a. The VIN No-Match file can be identified based on the file name prefix VIN. File will be named VIN*_NAIC_DatetimeStamp* (e.g. VIN_12345_ 20110806121501.pgp).

F. FTP Accounts and PGP Encryption. Insurance providers must send text files to LAIVS using File Transfer Protocol (FTP). FTP accounts will be created for each insurance provider after registering with LAIVS. If the insurance provider prefers, the same FTP account can be shared by providers with different NAIC numbers that are under the same insurance group. Login information and the IP addresses of the FTP servers will be provided after registration.

1. Each FTP account will have the following folders:

a. BOB_Inbound;

b. BOB_Outbound.

2. All files exchanged between LAIVS and insurance providers will be encrypted by the Pretty Good Privacy (PGP) digital data encryption program. Public PGP keys will be exchanged with the LAIVS Help Desk prior to exchanging insurance data. In addition, insurance providers will have the option to use SFTP (Secure File Transfer Protocol using SSH) instead of FTP for transmission layer security.

G. BOB File Testing Process. Before testing begins, each insurance provider participating in LAIVS must register on the LAIVS website as described in Section 5. After completing registration, insurance providers will be contacted by the LAIVS team to schedule a conference call to discuss the testing process and address any questions about the LAIVS reporting requirements. FTP User IDs and passwords will be provided and public PGP keys will be exchanged. The testing process includes the following:

1. Connectivity Testing. The insurance provider should be able to connect to the designated LAIVS FTP server, log in to the insurance provider's FTP account, and transfer files to the appropriate folders. The insurance provider should be able to retrieve LAIVS return files.

2. Decryption. LAIVS should be able to successfully decrypt files. The insurance provider should be able to successfully decrypt LAIVS return files.

3. File Format. The insurance provider files should be formatted according to LAIVS requirements.

4. File Content. The insurance provider file should contain valid test data and the data elements should meet the LAIVS rules. During testing, it is not necessary to provide production data (in force policies).

5. Insurance providers must pass the above tests before submitting production data. The LAIVS team will work with insurance providers and provide information to assist in resolution of any errors.

AUTHORITY NOTE: Promulgated in accordance with R.S. 32:863.2.

HISTORICAL NOTE: Promulgated by the Department of Public Safety and Corrections, Office of Motor Vehicles, LR 41:2682 (December 2015).

§1768. Insurance Provider Web Services

A. All insurance providers, except those granted an exemption, are required to implement web services capable of correctly verifying the existence of mandatory insurance for vehicles registered in LA. Insurance providers covering less than 500 vehicles registered in LA are encouraged, but are not required, to provide a web service.

B. Web Service Structure. The LAIVS Online Verification client is based upon the model developed by the IICMVA that allows a jurisdiction to use web services hosted by insurance providers to verify insurance. This section describes the overall structure of the web services to be hosted by the insurance providers.

1. Web Services Description Language (WSDL) File. A WSDL file is an XML file that describes the public interface to a web service. The IICMVA has created WSDL files for Java, .Net, and Universal web service implementations. To make the verification process as fast as possible, LAIVS uses these WSDL files and does not attempt to read the WSDL file at each web service every time a verification request is initiated. LAIVS manages the endpoints, which are uniform resource locators (URLs), from a local configuration file.

2. Schema. An XML schema describes the structure of an XML message. LAIVS currently supports the ANSI ASC X12 Insurance Committee's XML schema for online insurance verification. Case is not specified in the schema. If an insurance provider has particular requirements for upper or lower case, the message payload must be converted to the required case. Also, the policy number must be converted to the required format.

3. Extensible Markup Language (XML) Messages. The XML messages for the insurance verification request and response are derived from the schema. Appendix A contains a sample verification request message and a sample verification response message.

4. Simple Object Access Protocol (SOAP) SOAP is an XML based protocol that is used by web services to wrap around the XML messages making them platform and language independent. SOAP 1.1 is required.

5. Hypertext Transfer Protocol (HTTP) over Transmission Control Protocol/Internet Protocol (TCP/IP). The XML messages will be transported over the internet via HTTP. Verification requests will utilize HTTP 1.1 and it is strongly suggested that it be used for the verification responses as well.

6. Security. The XML messages will be encrypted via the Secure Sockets Layer (SSL). LAIVS will maintain Class 3 X.509 certificates identifying both the test and production environments. The certificate will be presented in each connection handshake so that the insurance provider can authenticate the client.

C. Expected Level of Service

1. Insurance providers' web services are required to respond to verification requests on a 24/7/365 basis. Although a reasonable amount of downtime to maintain and upgrade systems may occur, the web service availability, measured on a monthly basis, shall be at least 99 percent.

2. Scheduled downtime must be reported via e-mail to support@LAIVS.org as early as possible, describing the reason for the downtime, the time the web service will become unavailable, and the time it is expected to become available again.

3. Unscheduled downtime must be reported via e-mail to support@LAIVS.org immediately, describing the reason for the downtime, the time the web service became unavailable, and the estimated time it will become available again.

4. Each online LAIVS transaction should take no more than five seconds from the time that the verification request message is initiated by the user's system until the response reaches the user's system. In order to achieve the overall five second response time, each insurance provider should design its web service to provide a response within two seconds of receipt of an inquiry. Contributing factors to slow responses outside the control of the insurance providers, such as Internet response time, will be taken into account. Responses not received in a timely manner will be logged and used for evaluating the insurance provider's web services performance.

5. Accuracy is critical to the success of the program. Therefore, each insurance provider's web service must provide the correct response to an inquiry. Each web service will be monitored and tested for accurate responses, including testing for false confirmations.

D. The Verification Request and Response

1. LAIVS supports the current and previous versions of the IICMVA specifications and plans to include future versions as they are issued. Prior to implementation of a schema, a WSDL created from the schema must be tested and approved.

2. The Verification Request

a. The verification request is sent to the appropriate insurance provider by LAIVS in the XML message format that is valid for the schema employed by the insurance provider's web service. Verification that the request is from an authorized entity can be established from the certificate that LAIVS will present when the connection is initiated.

b. The following data elements will be in the verification request message:

i. tracking/reference number (ties the request to the response);

ii. National Association of Insurance Commissioners (NAIC) code (identifies insurance provider);

iii. vehicle identification number (VIN);

iv. policy number ("UNKNOWN" will be provided, if not available);

v. verification date. The verification date may be the current date or a date in the past. Insurance providers are required to maintain at least six months history. When a data element is required by the schema, if that data element is not available, LAIVS will send the following default value:

(a). "UNKNOWN" in any mandatory field where text is expected;

(b). zeroes in any mandatory field where numbers are expected.

3. The Verification Response

a. For each verification request sent by LAIVS, a verification response is issued by the insurance provider's web service. Because of front end edits, LAIVS will not send inquiries that would result in a response from the insurance provider that the request was invalid.

b. If minimum financial responsibility coverage is present and the policy is active on the requested verification date, the insurance provider responds with the following coverage confirmation result: CONFIRMED.

c. If minimum financial responsibility coverage is not present or the policy is not active on the requested

verification date, the insurance provider responds with the following coverage confirmation result: UNCONFIRMED.

d. The required data element in a verification response is:

i. ResponseCode.

e. We also recommend including the following data elements. However, these data elements are not mandatory.

i. UnconfirmedReasonCode

ii. TrackingNumber (return the number received in the verification request)

iii. NAIC

iv. VerificationDate

v. UniqueKey (policy number)

vi. PolicyState

E. Web Service Testing

1. Before testing begins, each insurance provider will have to register on the LAIVS website as described in Section 5. After registration is complete, the insurance provider will be contacted by the LAIVS team to schedule a conference call to discuss the testing process and address any questions about the LAIVS requirements. The following information will be collected during the call:

a. NAIC codes and the corresponding names of the underwriting insurance providers that will be responding to verification requests through the web service;

b. the web service URL(s);

c. a time frame during which insurance providers would like to conduct the testing.

2. Following the call, the insurance provider will be sent the following:

a. the SSL certificates that identify the LAIVS web service client;

b. the IP addresses that identify the source of the verification requests.

3. Although it is not required, the insurance provider can also send its SSL certificate for installation in the LAIVS trust store.

4. The testing will consist of the following steps.

a. Basic Connectivity Test. Connectivity between endpoints is tested via "ping" to ensure that endpoints are reachable.

b. Test ability to send and receive messages. Test verification requests and responses formatted in XML and wrapped in SOAP are exchanged.

c. Testing with security. The SSL encryption and authentication via the X.509 certificates will be enabled. Testing will be done to ensure that the functionality is not impacted. To properly authenticate the certificate from the jurisdiction, each insurance provider must install the public key from the jurisdiction's certificate and the root certificate from the issuing certificate authority.

d. Test Cases and Data. LAIVS will run the Insurance provider's Web service through a set of test cases. If required, the insurance provider will provide the data necessary for these test cases. After all the above testing has been completed, the insurance provider can make their production Web Services available to LAIVS for insurance verification.

F. VIN Broadcasting

1. If the VIN in the verification request message matches an insured vehicle but the policy number in the request does not match the insurance policy number, then the insurance provider's web service should be able to indicate that the vehicle is covered (this is known as "VIN Broadcasting" or "Unknown Carrier Request"). The insurance provider can indicate that the vehicle is covered in one of the following ways:

a. Returning a value of "UNCONFIRMED" in the ResponseCode field and a value of "10" or "VIN3" in the UnconfirmedReasonCode field of the CoverageResponse document.

b. Returning a value of "CONFIRMED" in the ResponseCode field of the CoverageResponse document.

2. It is recommended that insurance provider web services support VIN broadcasting. If an insurance provider web service does not support VIN broadcasting, then they are required to provide BOB data on a weekly basis.

AUTHORITY NOTE: Promulgated in accordance with R.S. 32:863.2.

HISTORICAL NOTE: Promulgated by the Department of Public Safety and Corrections, Office of Motor Vehicles, LR 41:2684 (December 2015).

§1770. Reporting by Smaller Insurance Providers

A. Smaller insurance providers providing coverage for less than 500 vehicles are not required to host insurance verification web services and report BOB files via FTP. If the smaller insurance providers are not reporting BOB files by FTP, these providers shall perform a one-time entry of all policies via the LAIVS website. After the initial entry, these insurance providers will only be required to update their policies on the LAIVS website whenever a policy is added, modified or cancelled/expired. If there is no update to their policies, these insurance providers are required to indicate this on the LAIVS website every week.

AUTHORITY NOTE: Promulgated in accordance with R.S. 32:863.2.

HISTORICAL NOTE: Promulgated by the Department of Public Safety and Corrections, Office of Motor Vehicles, LR 41:2686 (December 2015).

§1772. Registration Process

A. Insurance providers must register on the LAIVS website before testing with LAIVS. The LAIVS website can be accessed at https://www.LAIVS.org. Cookies should be

enabled for the website to properly function after the user has logged in. The LAIVS website is used for user registration, account management, reporting, user management, and providing help to insurance providers.

B. Insurance Provider Registration. To register, go to the LAIVS website home page and click on the "Register" link in the menu on the left side. Self-registration is only available to insurance providers that are licensed in LA. Please follow the instructions below.

1. Fill in all the insurance provider information and functional contact details.

2. Fill in the technical contact details.

3. Fill in the compliance contact details. The compliance contact is used to verify insurance by the LAIVS help desk.

4. Provide the password in the web login section.

5. Provide a secret question and answer which will be used with the forgot password functionality.

C. After the insurance provider submits the registration request, the web account is created and the LAIVS team will review and verify it. If the registration requirements are not met, the contact information submitted during registration will be used to notify the registrant and collect any missing/incorrect information. Once verification is complete, the insurance provider will be contacted by a LAIVS representative to start the testing process.

D. Accessing Help. The LAIVS website help function is available to users at all times and does not require the user to log in to the website. In order to get help, click on the "help" link from the left menu on any screen. The following information is available through the help function:

1. Users can download the latest version of the LAIVS Implementation Guide that provides detailed information on interacting with LAIVS.

2. A frequently asked questions section will be populated based on queries that the LAIVS help desk receives most often.

3. If these sources listed above are not sufficient, click on the "contact" link to write an email to the LAIVS help desk. The LAIVS help desk can be contacted directly at support@LAIVS.org.

E. Login for Registered and Approved Insurance Provider Users. The insurance provider must be registered with the LAIVS website and the account must be activated before a user can log in. To log in, enter the user name and password on the LAIVS website home page and then click the login button.

F. Insurance Provider Profile Management. Once logged in, the user can click on the Account Information link to access the provider profile information. The user can change the address, contact, and password information.

G. Insurance Provider Reports. This section will provide reports that will allow the insurance providers to determine the processing status of the files that were submitted. Users will be able to sort and search by the various fields in the reports, and will also be able to export data to Microsoft Excel.

AUTHORITY NOTE: Promulgated in accordance with R.S. 32:863.2.

HISTORICAL NOTE: Promulgated by the Department of Public Safety and Corrections, Office of Motor Vehicles, LR 41:2686 (December 2015).

§1774. Support

A. Insurance providers with questions about LAIVS or needing any clarification about information provided in this guide should send an email to support@LAIVS.org.

AUTHORITY NOTE: Promulgated in accordance with R.S. 32:863.2.

HISTORICAL NOTE: Promulgated by the Department of Public Safety and Corrections, Office of Motor Vehicles, LR 41:2687 (December 2015).

§1776. Appendix A—Sample Verification Request and Response Messages

A. Please Note. The sample request and response messages included in this guide are for illustrative purposes and do not necessarily reflect the latest version. Prior to implementation of a schema, a WSDL created from the IICMVA schema must be tested and approved.

1. Sample Verification Request Message


```
<?xml version="1.0" encoding="UTF-8"?>
<soapenv:Envelope
xmlns:soapenv="http://schemas.xmlsoap.org/soap/envelope/"
xmlns:xsd="http://www.w3.org/2001/XMLSchema"
xmlns:xsi="http://www.w3.org/2001/XMLSchema-instance">
  <soapenv:Body>
    <CoverageRequest
xmlns="http://www.iicmva.com/CoverageVerification/"
PublicationVersion="00200809" PublicationDate="2008-11-05">
      <RequestorInformation>
        <Organization>
          <Name>LAIVS</Name>
        </Organization>
        <ReasonDetails>
          <ReasonCode>BIVER</ReasonCode>
          <TrackingNumber>CTTRK-150219-144041-4-31-101-85-
1</TrackingNumber>
        </ReasonDetails>
      </RequestorInformation>
      <Detail>
        <PolicyInformation>
          <OrganizationDetails>
            <NAIC>12345</NAIC>
          </OrganizationDetails>
          <PolicyDetails>
            <VerificationDate>2015-02-19T00:00:00.000</VerificationDate>
            <PolicyKey>UNKNOWN</PolicyKey>
            <PolicyState>CT</PolicyState>
          </PolicyDetails>
        </PolicyInformation>
        <VehicleInformation>
          <VehicleDetails>
            <VIN>VINTEST123</VIN>
          </VehicleDetails>
        </VehicleInformation>
      </Detail>
    </CoverageRequest>
  </soapenv:Body>
</soapenv:Envelope>
```

2. Sample Verification Response Message


```
<?xml version="1.0" encoding="UTF-8"?>
<SOAP-ENV:Envelope
xmlns:xsd="http://www.w3.org/2001/XMLSchema" xmlns:SOAP-
ENV="http://schemas.xmlsoap.org/soap/envelope/"
xmlns:xsi="http://www.w3.org/2001/XMLSchema-instance" xmlns:SOAP-
ENC="http://schemas.xmlsoap.org/soap/encoding/">
  <SOAP-ENV:Body>
    <CoverageResponseDocument PublicationVersion="00200809"
PublicationDate="2008-11-05"
xmlns="http://www.iicmva.com/CoverageVerification/">
      <RequestorInformation>
        <!-- this section can be echoed from the request -->
        <Organization>
          <Name>LAIVS</Name>
        </Organization>
        <ReasonDetails>
          <ReasonCode>BIVER</ReasonCode>
          <TrackingNumber>CTTRK-150219-144041-4-31-101-85-
1</TrackingNumber>
        </ReasonDetails>
      </RequestorInformation>
      <Detail>
        <PolicyInformation>
          <CoverageStatus>
            <ResponseDetails>
<ResponseCode>Unconfirmed</ResponseCode>
<UnconfirmedReasonCode>VIN1</UnconfirmedReasonCode>
            </ResponseDetails>
          </CoverageStatus>
          <OrganizationDetails>
<NAIC>12345</NAIC>
<!-- this can be echoed from the request or provide the actual NAIC that
has evidence of coverage -->
          </OrganizationDetails>
          <PolicyDetails>
<!-- this section can be echoed from the request -->
<VerificationDate>2015-02-19T00:00:00.000</VerificationDate>
<PolicyKey>UNKNOWN</PolicyKey>
<PolicyState>CT</PolicyState>
          </PolicyDetails>
        </PolicyInformation>
      </Detail>
    </CoverageResponseDocument>
  </SOAP-ENV:Body>
</SOAP-ENV:Envelope>
```


AUTHORITY NOTE: Promulgated in accordance with R.S. 32:863.2.

HISTORICAL NOTE: Promulgated by the Department of Public Safety and Corrections, Office of Motor Vehicles, LR 41:2687 (December 2015).

§1778. Appendix B: Unconfirmed Reason Codes

A. Original Unconfirmed Reason Codes from ASC X12 Schema

1	Incorrect Data Format
2	Missing Unique Key
3	Missing NAIC Code
4	Missing VIN
5	Missing Verification Date
6	Unauthorized Requestor
7	System Cannot Locate Unique Key Information
8	System Found Unique Key - No Coverage on Date
9	System Found Unique Key - VIN Cannot Be Verified
10	System Found VIN - Unique Key Cannot Be Verified
11	System Cannot Locate Policy Information - Manual Search In Progress
12	System Unavailable

B. Newer Unconfirmed Reason Codes from ASC X12 Schema 00200706 and Later

IDF	Incorrect Data Format
SYSU	System Unavailable
UREQ	Unauthorized Requestor
NAIC1	NAIC Code Not Submitted
NAIC2	System Cannot Locate NAIC
PKEY1	Policy Key Not Submitted
PKEY2	System Cannot Locate Policy Key Information
PKEY3	System Found Policy Key - Coverage on Verification Date Cannot Be Confirmed
PKEY4	System Found Policy Key - VIN Cannot Be Verified
POL1	System Cannot Locate Policy Information - Manual Search in Progress
VDT1	Coverage on Verification Date Cannot Be Confirmed
VDT2	Verification Date Not Submitted
VIN1	System Cannot Locate VIN
VIN2	System Found VIN - Coverage on Verification Date Cannot Be Confirmed
VIN3	System Found VIN - Policy Key Cannot Be Verified
VIN4	VIN Not Submitted

AUTHORITY NOTE: Promulgated in accordance with R.S. 32:863.2.

HISTORICAL NOTE: Promulgated by the Department of Public Safety and Corrections, Office of Motor Vehicles, LR 41:2687 (December 2015).

§1780. Appendix C: Vehicle Types to be Reported

Vehicle Type	Should be reported to LAIVS?
Antique	Yes
ATV	No
Boat	No
Bus	Yes
Golf Cart	Yes
Mini Truck	Yes
Mobile Home/House Trailer	No
Motorcycle	Yes
Motor Home	Yes
Passenger	Yes
Semi-Trailer	No
Trailer	No
Truck	Yes
Truck Tractor	Yes
Trike	Yes
Van	Yes

AUTHORITY NOTE: Promulgated in accordance with R.S. 32:863.2.

HISTORICAL NOTE: Promulgated by the Department of Public Safety and Corrections, Office of Motor Vehicles, LR 41:2688 (December 2015).

§1782. Appendix D: Error Codes in Row Error Files

Error Code	Field Id	Field Name
E01	1	POLICY TYPE
E02	2	NAIC
E03	3	POLICY NUMBER
E04	4	EFFECTIVE DATE
E05	5	VIN
E06	6	LAST NAME or ORGANIZATION
E07	7	PREFIX NAME ABBR
E08	8	MIDDLE NAME
E09	9	FIRST NAME

Error Code	Field Id	Field Name
E10	10	SUFFIX NAME
E11	11	FEIN
E12	12	ADDRESS
E13	13	CITY
E14	14	STATE
E15	15	ZIP
E16	16	COMMERCIAL INDICATOR
E18	18	POLICY EXPIRATION DATE

AUTHORITY NOTE: Promulgated in accordance with R.S. 32:863.2.

HISTORICAL NOTE: Promulgated by the Department of Public Safety and Corrections, Office of Motor Vehicles, LR 41:2688 (December 2015).

§1784. Appendix E: Definitions

Book of Business (BOB)—a file that must be submitted to LAIVS at least once a calendar month that includes specified policy, vehicle, and customer information for all active policies with minimum liability coverage. Insurance providers who are not hosting a web service or whose web services do not support VIN broadcasting must provide BOB data on a weekly basis.

Decryption Error File—this file will be generated if a PGP decryption error occurs. Decryption errors can happen for the following reasons: the file sent by insurance provider was not encrypted, the file sent by insurance provider was improperly encrypted, or the file sent by insurance provider was encrypted using the wrong PGP key.

DPS—Louisiana Department of Public Safety.

Fleet Policy—a policy insuring a business with a fleet of five or more vehicles registered in Louisiana for which VIN information is not maintained on each vehicle. However, if the insurance provider does maintain the VIN of each vehicle within the fleet, the filing must be reported on a vehicle-by-vehicle basis.

FTP (*File Transfer Protocol*)—standard network protocol used to transfer computer files from one host to another host over a TCP-based network.

IICMVA—Insurance Industry Committee on Motor Vehicle Administration.

LSP—Louisiana State Police.

NAIC Number—the number issued by the National Association of Insurance Commissioners to licensed and affiliated insurance providers across the U.S.

OK File—If there are no errors in the BOB file submitted by the insurance provider, an OK file will be generated.

OMV—Louisiana Office of Motor Vehicles.

Reject File—this file will be generated if LAIVS cannot read the file or if the file is improperly formatted and the whole file is being rejected. The file may be rejected for the following reasons: the file is not formatted properly, the trailer has a non-zero record count but detail records of the file are missing, the length of each record (line) is not up to the length specified in the guide, the end of a record missing carriage return and line feed (Hexadecimal '0D 0A').

Row Error File—row error files are generated when the overall file format sent by the insurance provider is okay but some of the rows have errors including mandatory fields missing and invalid field formats. The row error file will contain only the records that are in error. The remaining records sent with the original file will be processed by LAIVS and will not appear in the file. Each error record will have the original row sent by the insurance provider followed by a 3 digit Error Code. The format of the Error Code will be E followed by the Field ID of the invalid/missing field. For example, the Error Code for a row with an invalid NAIC number will be "E02".

VIN Broadcasting—if the VIN in the verification request message matches an insured vehicle but the policy number in the request does not match the insurance policy number, then the insurance provider's web service should be able to indicate that the vehicle is covered. This is known as "VIN broadcasting" or "unknown carrier request".

VIN No-Match File—the VIN No–Match files are generated if any of the VINs submitted by the insurance provider do not match VINs of vehicles registered in LA. The VIN No-Match file will include all the records where the VIN did not match. Each record will have the original row sent by the insurance provider followed by "E05", the 3 digit error code indicating VIN mismatch.

AUTHORITY NOTE: Promulgated in accordance with R.S. 32:863.2.

HISTORICAL NOTE: Promulgated by the Department of Public Safety and Corrections, Office of Motor Vehicles, LR 41:2688 (December 2015).

§1786. Model User Guide for Implementing Online Insurance Verification

A. The Department of Public Safety and Corrections, Office of Motor Vehicles, hereby adopts by reference, the *Model User Guide for Implementing Online Insurance Verification - Using Web Services to verify evidence of auto liability insurance*, version 5.0 April 18, 2012, by the Insurance Industry Committee on Motor Vehicle Administration, effective date: August 20 2015, hereinafter referred to as the model user guide.

B. A copy of the model user guide shall be on file at the Office of State Register, Divisions of Administration, Third Street, Baton Rouge, LA 70802, and copies are available at the Office of Motor Vehicles Headquarters, 7979 Independence Blvd., Ste. 301, Baton Rouge, LA 70806 or P.O. Box 64886, Baton Rouge, LA 70896. A copy is also available at the following link: http://ola.dps.louisiana.gov/News_PDFs/Financial%20Responsibility%20Model%20UserGuide%20V1.pdf

AUTHORITY NOTE: Promulgated in accordance with R.S. 32:863.2.

HISTORICAL NOTE: Promulgated by the Department of Public Safety and Corrections, Office of Motor Vehicles, LR 41:2689 (December 2015).

Chapter 19. Special Identification Cards

§1901. Definitions

A. As used in this Chapter, the following terms have the meanings described below.

Assistant Secretary—Assistant Secretary of the Office of Motor Vehicles.

Department—Department of Public Safety and Corrections, Office of Motor Vehicles.

Driver Privacy Protection Act—the federal Driver Privacy Protection Act of 1994 (DPPA) (Title XXX of P.L. 103-322), 18 U.S.C. §2721 et seq., as implemented by the department in the *Louisiana Administrative Code*, Title 55, Part III, Chapter 5.

Personal Information—information which includes the full name, complete physical address, and date of birth.

AUTHORITY NOTE: Promulgated in accordance with R.S. 40:1321.

HISTORICAL NOTE: Promulgated by the Department of Public Safety and Corrections, Office of Motor Vehicles, LR 24:2317 (December 1998).

§1903. Application for Special Identification Card

A. First time applicants applying for a Louisiana special identification card will be required to provide one of the following combinations of identification:

1. one primary and two secondary documents; or

2. two primary documents.

B. When an applicant applying for a Louisiana special identification card possesses a current Louisiana driver's license, additional identification shall not be required.

C. If the applicant possesses a valid out-of-state driver's license, no secondary documents will be required if the applicant provides the department with a Louisiana residence.

D. When an applicant applies for a duplicate identification card and a digitized photographic image of the individual does not exist, the applicant shall be required to provide one of the following combinations of identification for verification purposes:

1. one primary and one secondary document; or

2. three secondary documents.

E.1. An expired Louisiana driver's license or previous, expired Louisiana identification card provided the photograph clearly identifies the applicant as the same may be accepted for verification purposes.

2. A Louisiana identification card beginning with the letter "X" shall not be accepted for purposes of verification.

F. If a digital photographic image exists, then the digital photographic image shall be compared to the applicant. Once viewed for positive identification, the digital photographic image shall be considered a primary document and applicant need only provide one secondary document. The acceptance of the digital photographic image shall be at the discretion of the motor vehicle employee processing the application or the motor vehicle employee's supervisor.

AUTHORITY NOTE: Promulgated in accordance with R.S. 40:1321.

HISTORICAL NOTE: Promulgated by the Department of Public Safety and Corrections, Office of Motor Vehicles, LR 24:2317 (December 1998).

§1905. Exclusive List of Acceptable Primary and Secondary Documents for Purposes of Identification

A. The following are the only items which are acceptable as primary documents:

1. a certified copy of a birth certificate (long form), an original certificate of birth (A seal is not required.), birth registration card or certificate issued by a state or county bureau of vital statistics with raised agency seal, birth card (short form), or a foreign birth certificate with a certified translation;

2. foreign birth certificates shall be accompanied by a passport and appropriately stamped immigration documents;

3. foreign passports shall be appropriately stamped and accompanied by proper immigration documents (I-94). An Alien Registration Card (I-151 or I-551) shall be considered a secondary document;

4. a certificate of naturalization is a document which indicates that the named individual has been granted United States citizenship. Since it is a federal crime to duplicate this form, a copy shall not be accepted as a primary document;

5. a current driver's license issued by another state shall be considered a primary document. A valid letter of clearance may be accepted when the applicant has lost his or her out-of-state license;

6. a foreign driver's license shall be considered a primary document only if it is accompanied by proper immigration documents. (I-94, I-151, I-551);

7. a valid United States military identification card or draft record or military dependent identification card shall be accepted as a primary document;

8. a current United States Coast Guard Merchant Mariner card shall be accepted as a primary document;

9. a certification of birth abroad issued by the United States Department of State;

10. an identification card issued by federal, state, or local government agency or entity provided it contains a photograph or information such as name, date of birth, sex, height, and address;

11. a Native American tribal document;

12. an out-of-state identification card issued by a state motor vehicle department;

13. a Department of Public Safety and Corrections prison identification card containing photograph, name, race, sex, and date of birth.

B. The following are the only items which are acceptable as secondary documents:

1. a student identification card issued by a Louisiana college or university when accompanied by a 100 percent tuition fee paid receipt for the current semester. These two items are to be considered as two separate documents;

2. W-2 forms for two years;

3. original documents of adoption papers;

4. an original of a high school, college or university diploma;

5. the original (issued at time of ceremony) or a certified copy of a marriage license or a certificate of marriage from a county, parish or city in the United States, or an original or certified copy of a divorce judgment or decree from a court of competent jurisdiction in the United States;

6. a Louisiana voter's registration card;

7. official certified deeds or title to property in Louisiana, including burial plot deeds;

8. a Louisiana vehicle registration certificate or Louisiana certificate of title;

9. a local utility statement showing name and address of the individual applying, or a receipt showing that public utilities have been activated at the address indicated on the application for the Louisiana special identification card;

10. an insurance policy, either health, home, life, or automobile liability;

11. three payroll check stubs. The name of the applicant printed on the check stub;

12. a temporary resident card (Form I-688) issued pursuant to the INS Immigration Reform and Control Act, to qualified aliens. This type of card is issued after May 5, 1987 and replaces the I-94 with fingerprint which was valid only until June 30, 1987. (This card is considered a primary document for these applicants);

13. high school year book—provided the picture clearly identifies the applicant as the same;

14. Medicare/Medicaid card or medical eligibility card;

15. prison release documents or letter from probation officer;

16. DD214 (military discharge papers);

17. selective service notification to the applicant at his address;

18. original or certified copy of any professional degree, certificate or license;

19. school records or at least two report cards from separate years;

20. motor vehicle chattel mortgage agreement;

21. any government law enforcement officer's identification or badge, if in uniform, a police unit; this does not include private security company guards;

22. eyewitness identification by reputable person;

23. letter of verification/introduction from another state agency responsible for placement of deprived or handicapped persons, such as Blind Services;

24. employment identification cards from major employers or companies with photograph, provided the photo clearly identifies the applicant as the same;

25. Social Security card or official verification from an Office of Social Security specifying number;

26. medical Card must be presented for the issuance of duplicate C.D.L. license;

27. driver's log book may be used as a secondary document on a C.D.L. license.

AUTHORITY NOTE: Promulgated in accordance with R.S. 40:1321.

HISTORICAL NOTE: Promulgated by the Department of Public Safety and Corrections, Office of Motor Vehicles, LR 24:2317 (December 1998).

§1907. Refugees

A. A refugee must have Form I-94 issued by the federal government. After one year the refugee should apply for a Resident Alien Card (Form I-551). Since it takes two to six months to receive the Form I-551, the refugee applicant should possess a new I-94 with his/her picture and a stamp indicating "processed for I-551." I-94, must be accompanied with at least two secondary documents or lease/rent agreement showing residence in Louisiana.

B. Secondary Documents

1. Original "Refugee Resettlement Program" letter with a color picture of the applicant. The color picture will have the agency director's signature across it and a raised agency seal overlapping. This letter will be valid for 15 days from the date of issuance. The alien registration number shall be recorded on the application for an identification card. The applicant's signature on the letter shall be compared with the individual's signature on the application card;

2. a school report card;

3. Social Security card or official verification from an Office of Social Security;

4. Work Authorization Card issued by INS (Immigration and Naturalization Service).

AUTHORITY NOTE: Promulgated in accordance with R.S. 40:1321.

HISTORICAL NOTE: Promulgated by the Department of Public Safety and Corrections, Office of Motor Vehicles, LR 24:2318 (December 1998).

§1909. Documents Which Are Not Acceptable Forms of Identification

A. The following items are not acceptable forms of identification:

1. immigration documents with a picture of individual under age 14;

2. hospital-issued birth certificate;

3. baptism certificate;

4. any photographic image of any official document, unless the document is certified by the official or his deputy having custody of the original document;

5. expired or altered military identification card;

6. expired student identification card;

7. birth certificate without the official "raised" seal of the Bureau of Vital Records;

8. union card;

9. old, expired Louisiana identification cards beginning with letter "X";

10. credit cards.

AUTHORITY NOTE: Promulgated in accordance with R.S. 40:1321.

HISTORICAL NOTE: Promulgated by the Department of Public Safety and Corrections, Office of Motor Vehicles, LR 24:2319 (December 1998).

§1911. Identification Requirements for Foreign Exchange Students

A. Foreign exchange students shall be required to submit a power of attorney, executed by a minor's parent(s) and awarding legal guardianship of the minor child to the major adult signing the application as the minor's legal guardian. A copy of this document must be maintained with the applicant's file.

AUTHORITY NOTE: Promulgated in accordance with R.S. 40:1321.

HISTORICAL NOTE: Promulgated by the Department of Public Safety and Corrections, Office of Motor Vehicles, LR 24:2319 (December 1998).

§1913. Additional Identification Requirements for Minors

A. Minor applicants applying for a first-time special identification card or a duplicate special identification card, shall be accompanied by a parent, a custodial parent if the parents are divorced or legally separated, or legal guardian if a person other than one of the parents has legal custody of the minor. The signature of a parent, a custodial parent if the parents are divorced or legally separated, or legal guardian if a person other than one of the parents has legal custody of the minor shall be required for the issuance of a special identification card. Proper identification shall be presented by both the minor and parent or guardian. The department may require additional documentation or information in order to verify the identity of the minor and parent or legal guardian.

AUTHORITY NOTE: Promulgated in accordance with R.S. 40:1321.

HISTORICAL NOTE: Promulgated by the Department of Public Safety and Corrections, Office of Motor Vehicles, LR 24:2319 (December 1998).

§1915. Eligibility

A. A Louisiana resident of any age may be issued a special identification card. The fee for issuance of the special identification card shall be $10 plus a $5.50 handling fee as provided by statute. The special identification card shall be issued for four years from the issue date. The renewal fee shall be the same as the fee for the issuance.

B. Any person over the age of 60 years who is a resident of Louisiana shall be entitled to a special identification card at no charge. Additionally, there shall be no expiration date or renewal date for a special identification card issued to a person over the age of 60 years, as provided for by Act 622 of the 1992 Legislative Session which amended R.S. 40:1321(G).

C. Act 237 of the 1981 Legislative session amends R.S. 32:414, R.S. 32:872, and R.S. 40:1321 to provide for the issuance of a special identification card to a person whose operator's license has been suspended, canceled, or revoked. The fee is $10 plus $5.50 handling fee, and is issued for four years from issue date and the renewal fee is the same as the fee for the issuance.

D. If an individual makes application for a special identification card, and has in his possession a valid out-of-state license, the license does not have to be surrendered. However, the individual must be informed that since residency has been established in Louisiana by issuance of the special identification card, in order to operate a motor vehicle on the public highways, roads, and streets of Louisiana, a Louisiana driver's license must be obtained by the individual.

E. In those cases in which an applicant cannot pass the required test for a driver's or chauffeur's license or does not wish to be issued a license, but only wishes to obtain a special identification card, the officer will complete the driver status slip for voluntary surrendered, attach license to the status slip, and forward the items the Office of Motor Vehicle Headquarters in Baton Rouge.

F. All identification cards issued to first time applicants shall be mailed, except in those cases in which the state residency requirements have been established.

AUTHORITY NOTE: Promulgated in accordance with R.S. 40:1321.

HISTORICAL NOTE: Promulgated by the Department of Public Safety and Corrections, Office of Motor Vehicles, LR 24:2319 (December 1998).

§1917. Duplicate Identification Cards

A. Applicants applying for a duplicate special identification card shall be required to provide one of the following combinations of identification:

1. one primary and one secondary document; or

2. three secondary documents.

B. Persons over the age of 60 years who are applying for a duplicate special identification card, shall be entitled to the duplicate at no charge (in accordance with Act 622 of the 1992 Legislative Session which amends R.S. 40:1321(G)).

AUTHORITY NOTE: Promulgated in accordance with R.S. 40:1321.

HISTORICAL NOTE: Promulgated by the Department of Public Safety and Corrections, Office of Motor Vehicles, LR 24:2319 (December 1998).

§1919. Acceptance of Checks for Identification Cards

A. Checks shall not be accepted for the payment of the fees due in connection with the issuance of a special identification card unless the check was issued by the Department of Health and Human Resources, Division of Vocation Rehabilitation, or its successor, in the appropriate amount for the issuance of special identification cards.

AUTHORITY NOTE: Promulgated in accordance with R.S. 40:1321.

HISTORICAL NOTE: Promulgated by the Department of Public Safety and Corrections, Office of Motor Vehicles, LR 24:2320 (December 1998).

§1921. Denial, Revocation or Cancellation of Identification Cards

A. The department may deny, cancel or revoke a special identification card for any of the following reasons.

1. The applicant made a misstatement of fact in his/her application for a special identification card, or the applicant omitted a material fact from his application for a special identification card.

2. The applicant intentionally furnished false information to the department in connection with his application for special identification card.

3. The individual has been found to be in possession of a fictitious special identification card or a special identification card which has been altered or caused to be altered by the individual.

4. Any personal information of the individual which appears on the face of the special identification card has changed, and more than 60 days has elapsed since the information has changed.

5. The department receives information that the individual is no longer a resident of the state of Louisiana.

6. The individual to whom the special identification card was issued has allowed another individual to use his/her special identification for purposes of identification or in the furtherance of the commission of fraud.

7. The individual is convicted of any criminal offense in which fraud, theft, or unauthorized use are elements of the offense, and the individual used the special identification card in the commission of the offense.

AUTHORITY NOTE: Promulgated in accordance with R.S. 40:1321.

HISTORICAL NOTE: Promulgated by the Department of Public Safety and Corrections, Office of Motor Vehicles, LR 24:2320 (December 1998).

§1923. Administrative Hearings

A. Any person denied a special identification card, or whose special identification card has been canceled or revoked, may make a written request for hearing within 30 days of the issuance of the denial. The written request may be mailed to the:

Office of Motor Vehicles
Attention Hearing Requests
P.O. Box 64885
Baton Rouge, Louisiana 70896

or hand delivered to the:

Office of Motor Vehicles Headquarters (in)
Baton Rouge, Louisiana

AUTHORITY NOTE: Promulgated in accordance with R.S. 40:1321.

HISTORICAL NOTE: Promulgated by the Department of Public Safety and Corrections, Office of Motor Vehicles, LR 24:2320 (December 1998).

§1925. Declaratory Orders and Rulings

A.1. Any person desiring a ruling on the applicability of R.S. 40:1321, or any other statute, or the applicability or validity of any rule, to special identification cards shall submit a written petition to the assistant secretary. The written petition shall cite all constitutional provisions, statutes, ordinances, cases, and rules which are relevant to the issue presented or which the person wishes the assistant secretary to consider prior to rendering an order or ruling in connection with the petition. The petition shall be typed, printed or written legibly, and signed by the person seeking the ruling or order. The petition shall also contain the person's full printed name, the complete physical and mailing address of the person, and a daytime telephone number.

2. If the petition includes reference to a specific transaction handled by the department, or if the petition relates to the issuance, revocation, cancellation, or denial of any special identification card, then the person submitting the petition shall also submit proof that he has notified all of the persons involved in the transaction or issuance, revocation, cancellation, or denial of the license, permit or certification by certified mail, return receipt requested. If the person is unable to notify the involved person or persons after otherwise complying with the notice requirement, he shall so state in his petition.

B. If the petition seeks an order or ruling on a transaction handled by the Office of Motor Vehicles, the person submitting the petition shall notify the person or persons who submitted the transaction, if other than the person

submitting the petition. Such notice shall be sent by certified mail, return receipt requested. In such case, the petition shall not be considered until proof of such notice has been submitted to the assistant secretary, or until the person petitioning for the order or ruling establishes that the person or persons cannot be notified after a due and diligent effort. The notice shall include a copy of the petition submitted to the assistant secretary.

C. The assistant secretary may request the submission of legal memoranda to be considered in rendering any order or ruling. The assistant secretary or his designee shall base the order or ruling on the documents submitted including the petition and legal memoranda. If the assistant secretary or his designee determines that the submission of evidence is necessary for a ruling, the matter may be referred to a hearing officer prior to the rendering of the order or ruling for the taking of such evidence.

D. Notice of the order or ruling shall be sent to the person submitting the petition as well as the persons receiving notice of the petition at the mailing addresses provided in connection with the petition.

E. The assistant secretary may decline to render an order or ruling if the person submitting the petition has failed to comply with any requirement in §1925.

AUTHORITY NOTE: Promulgated in accordance with R.S. 40:1321 and R.S. 49:962.
HISTORICAL NOTE: Promulgated by the Department of Public Safety and Corrections, Office of Motor Vehicles, LR 24:2320 (December 1998).

§1927. Driver Privacy Protection Act

A. Every applicant for a new or renewed special identification card shall be given the opportunity to prohibit the disclosure of personal information as defined in LAC 55, Part III, Chapter 5, §553 by completing the department's approved form, and submitting to the form to the department as required in the instructions on the form. An individual may submit a properly completed form to the department at anytime without having to transact any other business with the department. A form which is incomplete or which is illegible shall not be processed and shall not be returned.

B. Until the department receives a properly completed form from an individual, the personal information provided by the individual to the department shall be considered a public record as provided in R.S. 44:1 et seq.

C. Upon receipt of a properly completed form, the department will code the individual's record to reflect the proper disclosure code pursuant to the option chosen on the form.

AUTHORITY NOTE: Promulgated in accordance with R.S. 40:1321 and R.S. 49:962.
HISTORICAL NOTE: Promulgated by the Department of Public Safety and Corrections, Office of Motor Vehicles, LR 24:2321 (December 1998).

§1929. Renewals

A. In addition to renewing a special identification card by mail, an individual who has received an invitation to renew pursuant to R.S. 40:1321 may choose to renew his or her special identification card by contacting the department via the internet or by telephone.

B. Prior to initiating the renewal process via the internet or by telephone, the individual shall be required by the department to provide information verifying the individual's identity including the individual's identification card number, the individual's date of birth, and the date the individual's identification card expires.

C. Any individual who chooses to renew his or her identification card by electronic commerce shall be required to give express consent to any disclosure of personal information over the Internet or telephone line that may be necessary in order to complete the renewal process. This consent shall be obtained by any means appropriate based upon the method chosen to renew the license.

D. Except as otherwise provided in §1929, the rules governing renewal of special identification cards shall apply to renewals by mail or electronic commerce.

E. All money submitted with an application to renew a special identification card by mail shall be in the form of a personal check with the applicant's name and address preprinted on the check, a money order, a cashier's check, or a certified check.

F. All fees due in connection with the renewal of a special identification card by electronic commerce shall be paid using an approved credit card in accordance with applicable law.

AUTHORITY NOTE: Promulgated in accordance with R.S. 40:1321.
HISTORICAL NOTE: Promulgated by the Department of Public Safety and Corrections, Office of Motor Vehicles, LR 26:1633 (August 2000).

Chapter 21. Off-Road Vehicles

Subchapter A. Utility Terrain Vehicles

§2101. Definition

Utility Terrain Vehicle ("UTV")—a recreational motor vehicle or a recreational off-highway vehicle ("ROV") designed for and capable of travel over designated roads that meet the following qualifications:

1. travels on four or more tires with a maximum tire width of 27 inches,

2. has a maximum wheel cleat or lug of 3/4 of an inch,

3. has a minimum width of 50 inches but not exceeding 74 inches,

4. has a minimum weight of at least 700 pounds but not exceeding 2,000 pounds,

5. has a minimum wheelbase of 61 inches but not exceeding 110 inches, and

6. includes those vehicles not equipped with a certification label as required by 49 CFR Part 567.4, and excludes:

a. golf carts,

b. vehicles specially designed to carry a disabled person, or

c. vehicles otherwise registered under R.S. 32:299.

AUTHORITY NOTE: Promulgated in accordance with R.S. 32:299.3 and R.S. 32:299.4.

HISTORICAL NOTE: Promulgated by the Department of Public Safety and Corrections, Public Safety Services, Office of Motor Vehicles, LR 44:1912 (October 2018).

§2103. Prohibition Exceptions to Use of Utility Terrain Vehicles on Public Roads or Streets

A. The use of utility terrain vehicles on public roads or streets are prohibited except as follows:

1. operation of a utility terrain vehicle upon a parish road that has been designated by a parish for use by a utility terrain vehicle with appropriate posted signage indicating that the operation is authorized;

2. operation of a utility terrain vehicle upon a municipal street that has been designated by a municipality for use by a utility terrain vehicle with appropriate posted signage indicating that the operation is authorized;

3. operation at an intersection crossing any divided highway, highway, roadway, or street with a posted speed limit in excess of 35 miles per hour.

AUTHORITY NOTE: Promulgated in accordance with R.S. 32:299.3 and R.S. 32:299.4.

HISTORICAL NOTE: Promulgated by the Department of Public Safety and Corrections, Public Safety Services, Office Of Motor Vehicles, LR 44:1912 (October 2018).

§2105. Requirements for Utility Terrain Vehicles

A. Requirements for utility terrain vehicles:

1. operator must be at least 21 years of age;

2. operator must possess a valid driver's license;

3. any utility terrain vehicle operated upon any roadway or street shall be equipped with minimum motor vehicle equipment appropriate for motor vehicle safety including the following:

a. head lamps;

b. front and rear turn signal lamps;

c. tail lamps;

d. stop lamps;

e. reflex reflectors:

i. one on each side as far to the rear as practicable; and

ii. one red reflector on the rear of the vehicle;

f. exterior mirror mounted on the driver's side of the vehicle;

g. exterior mirror mounted on the passenger's side of the vehicle or an interior mirror;

h. parking brake;

i. adequate windshield;

j. windshield wiper;

k. speedometer;

l. odometer;

m. braking for each wheel;

n. seatbelt assembly installed at each designated seating position;

o. vehicle identification number or serial number.

AUTHORITY NOTE: Promulgated in accordance with R.S. 32:299.3 and R.S. 32:299.4.

HISTORICAL NOTE: Promulgated by the Department of Public Safety and Corrections, Public Safety Services, Office of Motor Vehicles, LR 44:1912 (October 2018).

§2107. Registering a Utility Terrain Vehicle

A. Requirements for registering a utility terrain vehicle:

1. a completed application form (DPSMV 1799);

2. manufacturer's statement of origin (new/unregistered vehicle) or title;

3. itemized invoice from dealer to purchaser or original notarized bill of sale or invoice (new/unregistered) or current certificate of title assigned before a notary by seller to purchaser, with the properly released lien, if applicable;

4. properly completed and signed odometer disclosure statement;

5. original or copy of properly completed UCC-1 form, or other security agreement, if a lien is to be recorded.

6. proof of liability insurance.

7. a statement from the purchaser indicating the following:

a. that the utility terrain vehicle contains all equipment required for use as indicated above and has a minimum wheelbase of 61 inches but not exceed 110 inches

b. that the owner is aware that the vehicle is only permitted to be used by a licensed driver at least twenty-one years of age;

c. that the utility terrain vehicle may only be used upon a parish road that has been designated by a parish, or a municipal street that has been designated by a municipality, for use by a utility terrain vehicle or cross any divided highway, highway, roadway, or street with a posted speed limit in excess of 35 miles per hour at an intersection;

8. applicable fees (title, handling, recordation fee)

9. applicable sales/use tax

AUTHORITY NOTE: Promulgated in accordance with R.S. 32:299.3 and R.S. 32:299.4.

HISTORICAL NOTE: Promulgated by the Department of Public Safety and Corrections, Public Safety Services, Office of Motor Vehicles, LR 44:1912 (October 2018).

§2109. Reclassifying a Qualifying Vehicle as a Utility Terrain Vehicle

A. Requirements for reclassifying a qualifying vehicle as a utility terrain vehicle:

1. a completed vehicle application form (DPSMV 1799), including section D on the reverse side of the form;

2. original title;

3. a statement from the purchaser indicating the following:

a. that the utility terrain vehicle contains all equipment required for use as indicated above and has a minimum wheelbase of 61 inches but not exceed 110 inches;

b. that the owner is aware that the vehicle is only permitted to be used by a licensed driver at least 21 years of age;

c. that the utility terrain vehicle may only be used upon a parish road that has been designated by a parish, or a municipal street that has been designated by a municipality, for use by a utility terrain vehicle or cross any divided highway, highway, roadway, or street with a posted speed limit in excess of 35 miles per hour at an intersection;

4. applicable fees (title and handling).

AUTHORITY NOTE: Promulgated in accordance with R.S. 32:299.3 and R.S. 32:299.4.

HISTORICAL NOTE: Promulgated by the Department of Public Safety and Corrections, Public Safety Services, Office Of Motor Vehicles, LR 44:1913 (October 2018).

§2111. Utility Terrain Vehicle Roadway Operation

A. A utility terrain vehicle will be issued an off-road decal.

B. Utility terrain vehicles are subject to the compulsory insurance requirements.

1. If liability insurance is cancelled it will result in a revocation of the registration and the driver's license.

2. To prevent insurance cancellations, the title must be surrendered and a title correction processed to re-classify the vehicle as an off-road vehicle. A title fee will be assessed.

AUTHORITY NOTE: Promulgated in accordance with R.S. 32:299.3. and R.S. 32:299.4.

HISTORICAL NOTE: Promulgated by the Department of Public Safety and Corrections, Public Safety Services, Office Of Motor Vehicles, LR 44:1913 (October 2018).

Subchapter B. Golf Carts

§2113. Definition

Golf Cart—an electric four-wheeled vehicle originally intended for use off-road on golf courses and other green spaces whose maximum speed is 25 miles per hour.

AUTHORITY NOTE: Promulgated in accordance with R.S. 32:299.3 and R.S. 32:299.4.

HISTORICAL NOTE: Promulgated by the Department of Public Safety and Corrections, Public Safety Services, Office Of Motor Vehicles, LR 44:1913 (October 2018).

§2115. Prohibition Exceptions to Use of Golf Carts on Public Roads or Streets

A. The use of golf carts on public roads or streets are prohibited except as follows.

1. A golf cart may be operated only upon a parish road that has been designated by a parish, or a municipal street that has been designated by a municipality, for use by a golf cart. Upon a designation that a golf cart may be operated on a designated road or street, the responsible governmental entity shall post appropriate signage indicating that the operation is authorized.

2. A golf cart may be used to cross a part of a state highway where a golf course is constructed on both sides of the state highway if the Department of Transportation and Development has issued a permit for the crossing.

B. No person shall operate a golf cart upon a parish road or municipal street without a valid driver's license.

AUTHORITY NOTE: Promulgated in accordance with R.S. 32:299.3 and R.S. 32:299.4.

HISTORICAL NOTE: Promulgated by the Department of Public Safety and Corrections, Public Safety Services, Office of Motor Vehicles, LR 44:1913 (October 2018).

§2117. Requirements

A. Any golf cart operated upon any roadway or municipal street shall be equipped with the minimum motor vehicle equipment appropriate for motor vehicle safety including:

1. efficient brakes;

2. reliable steering apparatus;

3. safe tires;

4. rear view mirror;

5. red reflectorized warning devices in both the front and rear of the vehicle;

6. front and rear turn signal lamps;

7. tail lamps;

8. brake lamps;

9. headlamps;

10. vehicle identification number or serial number.

B. A parish or municipal government may enact an ordinance relating to golf cart operation and may require equipment more extensive than indicated above, however, the list indicated above will be the only equipment required to title the vehicle.

AUTHORITY NOTE: Promulgated in accordance with R.S. 32:299.3 and R.S. 32:299.4.

HISTORICAL NOTE: Promulgated by the Department of Public Safety and Corrections, Public Safety Services, Office Of Motor Vehicles, LR 44:1913 (October 2018).

§2119. Titling a Golf Cart

A. The documentation required to register a golf cart is the same as the basic titling requirements:

1. a completed vehicle application form (DPSMV 1799);

2. manufacturer's statement of origin (new/unregistered vehicle) or title;

3. itemized invoice from dealer to purchaser or original notarized bill of sale or invoice (new/unregistered) or current certificate of title assigned before a notary by seller to purchaser, with the properly released lien, if applicable;

4. original or copy of properly completed UCC-1 form, or other security agreement, if a lien is to be recorded;

5. proof of liability insurance;

6. a statement from the purchaser indicating:

a. that the golf cart contains all equipment required for use as indicated above;

b. the owner is aware that the vehicle is only permitted to be used by a licensed driver;

c. the golf cart may be operated only upon a parish road that has been designated by a parish or a municipal street that has been designated by a municipality for use by a golf cart;

i. a golf cart may be used to cross a part of a state highway where a golf course is constructed on both sides of the state highway if the Department of Transportation and Development has issued a permit for the crossing;

7. applicable fees (title, handling, recordation fee);

8. applicable sales/use tax.

AUTHORITY NOTE: Promulgated in accordance with R.S. 32:299.3 and R.S. 32:299.4.

HISTORICAL NOTE: Promulgated by the Department of Public Safety and Corrections, Public Safety Services, Office of Motor Vehicles, LR 44:1914 (October 2018).

§2121. Reclassifying Vehicle as a Golf Cart

A. Requirements for reclassifying vehicle as a golf cart:

1. a completed vehicle application form (DPSMV 1799), including section D on the reverse side of the form;

2. original title;

3. statement from the purchaser indicating:

a. that the golf cart contains all equipment required for use as indicated above;

b. the owner is aware that the vehicle is only permitted to be used by a licensed driver;

c. the golf cart may only be used upon a parish road that has been designated by a parish or a municipal street that has been designated by a municipality for use by a golf cart. A golf cart may be used to cross a part of a state highway where a golf course is constructed on both sides of the state highway if the Department of Transportation and Development has issued a permit for the crossing;

4. applicable fees (title and handling).

AUTHORITY NOTE: Promulgated in accordance with R.S. 32:299.3 and R.S. 32:299.4.

HISTORICAL NOTE: Promulgated by the Department of Public Safety and Corrections, Public Safety Services, Office Of Motor Vehicles, LR 44:1914 (October 2018).

§2123. Golf Cart Roadway Operation

A. Requirements for golf cart roadway operation:

1. a golf cart will be issued an off road decal.

2. golf carts are subject to the compulsory insurance requirements. If liability insurance is cancelled, it will result in a revocation of the registration and the driver's license. To prevent insurance cancellations, the title must be surrendered and a title correction processed to re-classify the vehicle as an off road vehicle. A title fee will be assessed.

AUTHORITY NOTE: Promulgated in accordance with R.S. 32:299.3 and R.S. 32:299.4.

HISTORICAL NOTE: Promulgated by the Department of Public Safety and Corrections, Public Safety Services, Office of Motor Vehicles, LR 44:1914 (October 2018).

Chapter 23. Hang Tags for Mobility Impaired Individuals

§2301. Definitions

A. As used in this Chapter, the following terms have the meanings described below.

Medical Examiner—a person licensed to practice medicine in Louisiana or any other state or territory of the United States, a person licensed to practice chiropractic by the Louisiana State Board of Chiropractic Examiners, a person licensed by the Louisiana State Board of Physical Therapy Examiners, or advanced practice registered nurses.

Mobility Impaired—the individuals who come under statutory definition of a mobility impaired person or a veteran who has a 50 percent or more service connected disability are eligible for the mobility impaired hang tag.

AUTHORITY NOTE: Promulgated in accordance with R.S. 47:463.4.

HISTORICAL NOTE: Promulgated by the Department of Public Safety and Corrections, Office of Motor Vehicles, LR 45:280 (February 2019), repromulgated LR 45:000 (May 2019).

§2303. Application for Hang Tags (Visiting a Field Office)

A.1.First time applicants applying for a hang tag for mobility impairment must include:

a. a currently dated medical examiner's certification of mobility impairment form (DPSMV 1966). A *medical examiner* is defined as:

i. a person licensed to practice medicine in Louisiana or any other state or territory of the United States;

ii. a person licensed to practice chiropractic by the Louisiana State Board of Chiropractic Examiners;

iii. a person licensed by the Louisiana State Board of Physical Therapy Examiners, or an advanced practice registered nurse;

b. in the case of a disabled veteran, a decision letter or an affidavit from the Veterans Affairs Office attesting to the veteran's disability. A veteran who currently has a disabled veteran's license plate is not required to submit a separate medical examiner's certificate of mobility impairment. He is eligible to receive a "permanent" hang tag at no charge at initial issuance.

2. The certification must indicate the type of impairment as follows.

a. Permanently Impaired. Certification must state the physical condition which qualifies the applicant for a hang tag is a permanent condition. A mobility impaired hang tag will be issued with a 10 year expiration date. Re-certification will not be required upon renewal.

b. Temporarily Impaired. Certification must state the physical condition which qualifies the applicant for a hang tag is temporary (one year or less). A mobility impaired hang tag will be issued with a one year expiration date. If the temporary mobility impairment persists past a year from the date of issuance, an additional certification must be submitted upon renewal of temporary hang tag.

3. Up to three additional hang tags may be issued on behalf of a person with a mobility impairment. Only one fee ($3 for temporarily impaired hang tag and $7.50 for a permanently impaired hang tag) will be accessed. Only one mobility impaired ID card will be issued.

AUTHORITY NOTE: Promulgated in accordance with R.S. 47:463.4.

HISTORICAL NOTE: Promulgated by the Department of Public Safety and Corrections, Office of Motor Vehicles, LR 45:280 (February 2019), repromulgated LR 45:679 (May 2019).

§2305. Proper Display of a Hang Tag

A. The hang tags are designed to be hung from the vehicle's front windshield rear view mirror. When there is no rear view mirror, the hang tag may be displayed on the vehicle's dashboard.

AUTHORITY NOTE: Promulgated in accordance with R.S. 47:463.4.

HISTORICAL NOTE: Promulgated by the Department of Public Safety and Corrections, Office of Motor Vehicles, LR 45:280 (February 2019), repromulgated LR 45:679 (May 2019).

§2307. Application for Hang Tags (Applicant is Unable to Visit a Field Office)

A. First time applicants:

1. a currently dated medical examiner's certification form or, in the case of a disabled veteran, proof of a special disabled veteran license plate, a decision letter or an affidavit from the Office of Veteran Affairs and a separate medical examiner's certification which indicates the applicant is unable appear in person at the Office of Motor Vehicles;

2. a color photograph of the applicant.

B. Renewal applicants:

1. if the applicant has a permanent status—mobility ID and expired hang tag;

2. if the applicant has a temporary status—a currently dated examiner's certification of mobility impairment form (DPSMV 1966) or, in the case of a disabled veteran, a decision letter or an affidavit from the Office of Veteran Affairs and a separate medical examiner's statement indicating the applicant is unable to appear in person at the Office of Motor Vehicles;

3. a color photograph of the applicant.

AUTHORITY NOTE: Promulgated in accordance with R.S. 47:463.4.

HISTORICAL NOTE: Promulgated by the Department of Public Safety and Corrections, Office of Motor Vehicles, LR 45:280 (February 2019), repromulgated LR 45:679 (May 2019).

§2309. Denial, Revocation or Cancellation of Hang Tags or Mobility Impaired Identification Card

A. The department may deny, cancel or revoke a hang tag or mobility impaired identification card for any of the following reasons.

1. The applicant made a misstatement of fact in his/her application for a hang tag or mobility impaired identification card, or the applicant omitted a material fact from his application for a hang tag or mobility impaired identification card.

2. The applicant intentionally furnished false information to the department in connection with his application for hang tag or mobility impaired identification card.

3. The individual has been found to be in possession of a fictitious hang tag or mobility impaired identification card, or a hang tag or mobility impaired identification card which has been altered or caused to be altered by the individual.

4. Any personal information of the individual that appears on the face of the hang tag or mobility impaired identification card has changed, and more than 60 days has elapsed since the information has changed.

5. The department receives information that the individual is no longer a resident of the state of Louisiana.

6. The individual to whom the hang tag or mobility impaired identification card was issued has allowed another individual to use his/her hang tag or mobility impaired identification card for purposes of identification or in the furtherance of the commission of fraud.

7. The individual is convicted of any criminal offense in which fraud, theft, or unauthorized use are elements of the offense, and the individual used the hang tag or mobility impaired identification card in the commission of the offense.

AUTHORITY NOTE: Promulgated in accordance with R.S. 47:463.4.

HISTORICAL NOTE: Promulgated by the Department of Public Safety and Corrections, Office of Motor Vehicles, LR 45:280 (February 2019), repromulgated LR 45:679 (May 2019).

Title 55
PUBLIC SAFETY
Part V. Fire Protection

Chapter 1. Preliminary Provisions

§101. Petition for Rulemaking

A. In accordance with R.S. 49:953(C)(1), any interested person may petition an agency to adopt a new rule, or to amend or repeal an existing rule.

B. To petition the Office of State Fire Marshal for the adoption, amending or repeal of any rule, an interested person shall submit in writing the Department of Public Safety's petition for rulemaking form to the Office of State Fire Marshal at 8181 Independence Boulevard, Baton Rouge, LA 70806, Attn: Rulemaking Petition, which contains the following basic information organized and captioned:

1. the petitioner's name and address;

2. the specific rulemaking agency to be petitioned within the Department of Public Safety as listed on the form;

3. a brief description of the facts or justification supporting the petitioner's request for the adoption of a rule or the amending of a rule that has already been adopted;

4. suggested specific language or language setting forth the substance of the proposed rule or rule change that is being requested, which may be attached to, or in addition to, the petition for rulemaking form;

5. a copy of each and every document upon which the petitioner bases the request for a rule or a citation of the information and where it can be easily obtained for review by the rulemaking agency;

6. the petitioner's signature and date of signature.

C. The Department of Public Safety's petition for rulemaking form can be found on the official website of the Office of State Fire Marshal.

AUTHORITY NOTE: Promulgated in accordance with R.S. 40:1563(F), R.S. 40:1578.6(A), Act 454 of the 2018 Regular Legislative Session and R.S. 49:953 et seq.

HISTORICAL NOTE: Promulgated by the Department of Public Safety, Office of Fire Protection, LR 4:465 (November 1978), amended by the Department of Public Safety and Corrections, Office of State Fire Marshal, LR 6:71 (February 1980), LR 23:1688 (December 1997), LR 43:968 (May 2017), LR 46:701 (May 2020).

§102. Consideration of a Rulemaking Petition

A. Upon receipt of a petition for rulemaking form, the state fire marshal shall forward the petition to the agency designee. The agency designee shall review the petition for completeness, pursuant to the requirements listed in LAC 55:V.101.B. If the petition is found to be complete, the agency designee shall consider the petition.

B. Within 90 days of receipt of the petition, the state fire marshal or the agency designee shall either:

1. initiate rulemaking procedures to adopt a new rule, or to amend an existing rule and notify the petitioner in writing of such; or

2. notify the petitioner in writing of the denial to proceed with rulemaking, stating the reason(s) therefore.

C. Whenever the state fire marshal or the agency designee determines that a public hearing should be held prior to the adoption of any rule or rule change, a notice of the meeting date, time and place will be published in the *Louisiana Register*.

AUTHORITY NOTE: Promulgated in accordance with Act 454 of the 2018 Regular Legislative Session and R.S. 49:953, et seq.

HISTORICAL NOTE: Promulgated by the Department of Public Safety and Corrections, Office of State Fire Marshal, LR 46:702 (May 2020).

§103. General Provisions

A. It shall be the policy of the state fire marshal that in all instances or specifications provided in the statutes or in the codes referenced by the statutes, or by any specific references in administrative rulings by the state fire marshal, that the *Standard Building Code* published by the Southern Building Code Congress International, and the *International Building Code* published by the International Code Council, and the *National Fire Codes* and standards published by the National Fire Protection Association, the publications referenced by the *NFPA 1 Fire Code* and the *NFPA 101 Life Safety Code*, and the publications specifically identified in the following list, shall be used as the materials for determinations by the state fire marshal.

NFPA 1	2015 Edition	Fire Code
NFPA 18	2011 Edition	Standard on Wetting Agents
NFPA 32	2011 Edition	Standard for Dry Cleaning Plants
NFPA 37	2015 Edition	Standard for the Installation and Use of Stationary Combustion Engines and Gas Turbines
NFPA 51	2013 Edition	Standard for the Design and Installation of Oxygen-Fuel Gas Systems for Welding, Cutting, and Allied Processes
NFPA 53	2016 Edition	Recommended Practice on Materials, Equipment, and Systems Used in Oxygen-Enriched Atmospheres
NFPA 99B	2015 Edition	Standard for Hypobaric Facilities
NFPA 101	2015 Edition	Life Safety Code
NFPA 495	2013 Edition	Explosive Materials Code

NFPA 664	2012 Edition	Standard for the Prevention of Fires and Explosions in Wood Processing and Woodworking Facilities
NFPA 820	2016 Edition	Standard for Fire Protection in Wastewater Treatment and Collection Facilities
NFPA 901	2016 Edition	Standard Classifications for Incident Reporting and Fire Protection Data
NFPA 1123	2014 Edition	Code for Fireworks Display
NFPA 1124	2017 Edition	Code for the Manufacture, Transportation, Storage, and Retail Sales of Fireworks and Pyrotechnic Articles
NFPA 1221	2013 Edition	Standard for the Installation, Maintenance, and Use of Emergency Services Communications Systems
NFPA 1402	2012 Edition	Guide to Building Fire Service Training Centers
NFPA 1403	2012 Edition	Standard on Live Fire Training Evolutions
NFPA 1961	2013 Edition	Standard on Fire Hose
NFPA 1962	2013 Edition	Standard for the Inspection, Care, and Use of Fire Hose, Couplings, and Nozzles and the Service Testing of Fire Hose

B. All inspections and other evaluations of buildings constructed or remodeled pursuant to plans submitted to the Office of State Fire Marshal for review shall be made utilizing new construction requirements set forth in the *Life Safety Code* published by the National Fire Protection Association, the *NFPA 1 Fire Code* published by the National Fire Protection Association, the special provisions for high-rise building section of the *Standard Building Code* published by the Southern Building Code Congress International, the fire protection and life safety provisions of the *International Building Code* published by the International Code Council, and the *FGI Guidelines* published by the Facilities Guidelines Institute for facilities evaluated on behalf of the Department of Health as follows.

Building Constructed or Remodeled	Life Safety Code Edition	NFPA 1 Fire Code Edition	Section/ Building Code Edition	Sections/ International Building Code Edition	FGI Guidelines
prior to 1/1/1975	1967		-	-	
1/1/1975 to 12/31/1979	1973		518 / 1974 Chapter 4 revisions to 1973	-	
1/1/1980 to 8/31/1981	1976		518 / 1974 Chapter 4 revisions to 1973	-	
9/1/1981 to 8/31/1986	1981		506 / 1979	-	
9/1/1986 to 2/18/1989	1985		506 / 1985	-	
2/19/1989 to 5/31/1992	1988		506 / 1985	-	
6/1/1992 to 1/4/1995	1991		506 / 1988	-	
1/5/1995 to 5/31/1998	1994		506 / 1991	-	
6/1/1998 to 6/30/2001	1997		412 / 1994	-	
7/1/2001 to 12/31/2001	2000		412 / 1994	-	
1/1/2002 to 6/30/2004	2000		412 / 1997	-	
7/1/2004 to 9/30/2007	2003		-	-	
10/1/2007 to 6/30/2010	2006		-	-	
7/1/2010 to 12/31/2013	2009		-	-	
1/1/2014 to 6/30/2017	2012		-	9 and 10/2012	
after 7/1/2017	2015	2015		9 and 10/2015	2014

C. All references to performance based criteria in the *Life Safety Code* shall only be considered by the Office of State Fire Marshal after an appeal of a decision has been timely made.

AUTHORITY NOTE: Promulgated in accordance with R.S. 40:1563(F), R.S. 40:1563(L), R.S. 40:1578.6(A), and R.S. 40:1578.7(E).

HISTORICAL NOTE: Promulgated by the Department of Public Safety, Office of Fire Protection, LR 1:145 (February 1975), amended LR 5:468 (December 1979), LR 6:71 (February 1980), amended by the Office of State Fire Marshal, LR 7:588 (November 1981), LR 9:417 (June 1983), amended by the Department of Public Safety and Corrections, Office of State Fire Marshal, LR 15:96 (February 1989), LR 17:1114 (November 1991), LR 23:1688 (December 1997), LR 27:857 (June 2001), LR 27:2257 (December 2001), repromulgated LR 29:183 (February 2003), amended LR 30:1303 (June 2004), LR 33:671 (April 2007), LR 36:1564 (July 2010), LR 39:1478 (June 2013), LR 43:969 (May 2017).

§105. Required Inspections of Wiring, Gas Piping and Fire Extinguishers

A. In order to assure that the electrical wiring in any structure or movable will not cause a fire or explosion, the electrical wiring in any structure, watercraft or movable shall be inspected and, if necessary, repaired by a licensed electrical contractor in accordance with the *National Electrical Code*.

B. In order to assure that any structure, watercraft or movable is safe from hazards caused by gas piping, all gas piping shall be inspected and, if necessary, repaired by a licensed plumber or mechanical contractor in accordance with the applicable *National Fuel Gas Code* of the National Fire Protection Association and the provisions of the Louisiana Revised Statutes.

C. The inspections required by this regulation for electrical wiring and gas piping shall be made at the time of the initial installation and thereafter as required based upon a visual inspection by the fire marshal or his designated representative.

AUTHORITY NOTE: Promulgated in accordance with R.S. 40:1651(B).

HISTORICAL NOTE: Promulgated by the Department of Public Safety, Office of State Fire Marshal, LR 8:145 (March 1982), amended by the Department of Public Safety and

Corrections, Office of State Fire Marshal, LR 23:1691 (December 1997).

§107. Smoke and Fire Detection Systems

A. Educational Occupancies

1. In those educational facilities for which plans were reviewed prior to January 1, 1982, and in which deficiencies have been noted because of inadequate corridor separation, lack of smoke barriers, and lack of sprinkler protection in windowless classroom buildings, the state fire marshal will accept as equivalent compliance to the aforementioned requirements installation of a complete smoke detection system in the corridors and hazardous areas. This system must be capable of/and properly connected to sound the general fire alarm and shut down all central air handling systems.

2. Within 45 days after service on the owner and/or operator of an inspection report and order of correction citing the deficiencies listed therein, the owner and/or operator of the school must submit to the fire marshal a proposed plan of correction in accordance with §107.A.1. The accepted plan of correction then must be completed within the time specified by the fire marshal which shall not exceed 48 months.

AUTHORITY NOTE: Promulgated in accordance with R.S. 40:1651(B).

HISTORICAL NOTE: Promulgated by the Department of Public Safety, Office of State Fire Marshal, LR 8:236 (May 1982), amended LR 8:523 (October 1982), LR 8:625 (November 1982), amended by the Department of Public Safety and Corrections, Office of State Fire Marshal, LR 23:1691 (December 1997).

Chapter 3. Buildings

§301. Building Permits

A. In accordance with the requirements set forth in R.S. 40:1574 that plans and specifications for any and all buildings to be constructed in the state must first be submitted to the Office of State Fire Marshal for review before construction, renovation, remodeling, or repair, no governmental subdivision in the state of Louisiana shall issue any building permit until the plans and specifications, therefore, have been approved by the Office of State Fire Marshal.

B. Accordingly, with the application for a building permit from any governmental subdivision of this state, proof of approval by the Office of State Fire Marshal of the plans and specifications for which the building permit is being requested shall be provided with the permit application. Such proof may be provided electronically. This ruling shall not apply to one- and two-family dwellings.

C. Plans and specifications submitted in violation of R.S. 37:155(4) will be rejected by the Office of State Fire Marshal.

AUTHORITY NOTE: Promulgated in accordance with R.S. 40:1563(F) and R.S. 40:1578.6(A).

HISTORICAL NOTE: Promulgated by the Department of Public Safety, Office of Fire Protection, LR 4:465 (November 1978), repromulgated LR 6:72 (February 1980), amended by the Department of Public Safety and Corrections, Office of State Fire Marshal, LR 16:320 (April 1990), LR 23:1691 (December 1997), LR 43:970 (May 2017).

§303. Plans and Specifications for New Buildings

A. As of July 1, 2017, the plans and specifications for every structure built or remodeled in the state of Louisiana shall be submitted for review and must be drawn in accordance with the applicable requirements of the following publications:

1. the 2015 edition of the *NFPA 101 Life Safety Code* (excluding chapter 5, which may be used as a basis for equivalency determinations);

2. the publications referenced in chapter 2 of the *NFPA 101 Life Safety Code*;

3. the applicable provisions of the 2015 edition of the *NFPA 1 Fire Code*;

4. the fire protection and life safety provisions of the most recently adopted *International Building Code* (IBC) by the Louisiana State Uniform Construction Code Council;

5. the most recently adopted editions of the Louisiana State Uniform Construction Code (LSUCC) for *Industrialized Buildings* and for building code reviews performed on behalf of parishes and municipalities;

6. the 2016 editions of *NFPA 13 for Sprinkler Systems*, *NFPA 13D for Domestic Sprinkler Systems*, and *NFPA 13R for Residential Sprinkler Systems*;

7. and the 2016 edition of *NFPA 20 for Stationary Fire Pumps*.

B. In addition to the documents outlined above, plans and specifications for specific structure uses shall be drawn in accordance with the requirements of the following publications:

1. *NFPA 30A: Code for Motor Fuel Dispensing Facilities and Repair Garages*, 2015 Edition;

2. *NFPA 32: Standard for Drycleaning Facilities*, 2011 Edition;

3. *NFPA 33: Standard for Spray Application Using Flammable or Combustible Materials*, 2011 Edition;

4. *NFPA 37: Standard for the Installation and Use of Stationary Combustion Engines and Gas Turbines*, 2015 Edition;

5. *NFPA 51: Standard for the Design and Installation of Oxygen-Fuel Gas Systems for Welding, Cutting, and Allied Processes*, 2013 Edition;

6. *NFPA 59A: Standard for the Production, Storage, and Handling of Liquefied Natural Gas (LNG)*, 2013 Edition;

7. *NFPA 140: Standard on Motion Picture and Television Production Studio Soundstages, Approved Production Facilities, and Production Locations*, 2013 Edition;

8. *NFPA 400: Hazardous Materials Code*, 2016 Edition;

9. *NFPA 407: Standard for Aircraft Fuel Servicing*, 2012 Edition;

10. *NFPA 495: Explosive Materials Code*, 2013 Edition;

11. *NFPA 664: Standard for the Prevention of Fires and Explosions in Wood Processing and Woodworking Facilities*, 2012 Edition;

12. *NFPA 1221: Standard for the Installation, Maintenance, and Use of Emergency Services Communications Systems*, 2013 Edition.

C. As of July 1, 2017, the plans and specifications for facilities licensed, certified, or seeking licensure or certification by the Louisiana Department of Health and submitted to the state fire marshal for review in accordance with R.S. 40:1563(L) shall be drawn in accordance with the applicable requirements of the following publications:

1. the 2014 edition of the Facility Guidelines Institute publication titled *Guidelines for Design and Construction of Hospitals and Outpatient Facilities*, where required by rules published by the Louisiana Department of Health for hospitals and outpatient facilities;

2. the 2014 edition of the Facility Guidelines Institute publication titled *Guidelines for Design and Construction of Residential Health, Care, and Support Facilities*, where required by rules published by the Louisiana Department of Health for residential health, care, and support facilities;

3. rules published by the Louisiana Department of Health as applicable to the physical environment for licensed or certified facilities.

D. All unsprinkled dwelling units within apartment buildings shall be separated from one another by construction having a fire resistance rating of not less than one hour as required by the standard building code.

E. Portable fire extinguishers shall be required in all occupancies. The location, maintenance, and installation shall be in accordance with *NFPA Pamphlet Number 10*.

AUTHORITY NOTE: Promulgated in accordance with R.S. 40:1563(F), R.S. 40:1563(L), and R.S. 40:1578.6(A).

HISTORICAL NOTE: Promulgated by the Department of Public Safety, Office of Fire Protection, LR 1:143 (February 1975), amended LR 5:468 (December 1979), LR 6:72 (February 1980), amended by the Office of State Fire Marshal, LR 7:344 (July 1981), LR 7:588 (November 1981), LR 9:417 (June 1983), amended by the Department of Public Safety and Corrections, Office of State Fire Marshal, LR 12:116 (February 1986), LR 15:96 (February 1989), LR 17:1115 (November 1991), LR 23:1692 (December 1997), LR 30:1305 (June 2004), LR 33:673 (April 2007), LR 36:1565 (July 2010), LR 39:1480 (June 2013), LR 43:970 (May 2017).

§305. Insulation

A. The state fire marshal will accept and permit the use of insulation as permitted by the 1994 Edition of the *Standard Building Code*.

AUTHORITY NOTE: Promulgated in accordance with R.S. 40:1651(B).

HISTORICAL NOTE: Promulgated by the Department of Public Safety, Office of Fire Protection, LR 4:389 (October 1978), LR 6:72 (February 1980), LR 6:149 (April 1980), amended by the Office of State Fire Marshal, LR 8:485 (September 1982), amended by the Department of Public Safety and Corrections, Office of State Fire Marshal, LR 23:1692 (December 1997).

§307. Observation of Construction; Final Inspection

A. For a structure which by law may only be constructed with plans prepared and certified by a licensed architect or civil engineer, it shall be the duty of the owner of such a structure to provide for periodic observation of the construction of the structure to determine if the work is proceeding in accordance with the plans and specifications as approved by the fire marshal. The observations shall be performed by a registered architect or a registered civil engineer.

B. Upon completion of such work, where the law requires the owner to engage an architect or registered civil engineer, the owner shall furnish to the fire marshal a certificate signed by a registered architect or registered civil engineer stating that the periodic observations have been made and that to the best of the architect's or engineer's knowledge, information and belief, the work was completed in accordance with those fire safety standards and regulations stipulated in the plans and specifications previously approved by the fire marshal. When the owner has not engaged an architect or registered civil engineer, and the same is not required by law, the owner must submit the certificate of completion when appropriate, but always under his signature. Electronic certification made through the state fire marshal online portal shall be acceptable

C. Occupancy of a structure, watercraft or movable prior to furnishing a certificate to the fire marshal as required under this regulation is expressly forbidden by the fire marshal, unless and until a satisfactory inspection has been made by the fire marshal or his certified representative.

D. In order to comply with the requirements of §307.B, the owner must submit to the fire marshal the following certificate completed by the architect, civil engineer, or, if neither is required by law, the owner. In lieu of the following completed certificate, electronic certification made through the state fire marshal online portal shall be acceptable.

CERTIFICATE OF COMPLETION

Date:

TO: The Louisiana State Fire Marshal
8181 Independence Blvd.
Baton Rouge, Louisiana 70806

This is to certify that the _____
(name of project by title)
for _____ located at _____
(type of use) (street/number/name)
as periodically observed by me, by my consultants, and/or by others in my employ during construction and, to the best of my knowledge, information and belief, has been completed in accordance with the safety provisions which were shown in

the plans and specifications previously approved by the fire marshal.

Under penalty of law for false statement,

I _____ License Number: _____
(name of architect/civil engineer
or owner if architect or engineer
is not required)

certify that all statements contained therein are, to the best of my knowledge, information and belief, true and correct.

AUTHORITY NOTE: Promulgated in accordance with R.S. 40:1563(F).

HISTORICAL NOTE: Promulgated by the Department of Public Safety, Office of Fire Protection, LR 3:498 (December 1977), repromulgated LR 6:73 (February 1980), amended by the Office of State Fire Marshal, LR 8:523 (October 1982), amended by the Department of Public Safety and Corrections, Office of State Fire Marshal, LR 23:1692 (December 1997), LR 43:970 (May 2017).

§309. Requirements for Connection of Electrical Power

A. The installation and/or use of temporary or permanent electrical power in new construction shall be prohibited until plans and specifications for every structure built in the state of Louisiana are reviewed by the Office of State Fire Marshal pursuant to R.S. 40:1574 and LAC 55:V.303 and found to comply with the requirements.

B. Proof of compliance shall be presented to utility companies upon request for temporary or permanent power.

AUTHORITY NOTE: Promulgated in accordance with R.S. 40:1563(F).

HISTORICAL NOTE: Promulgated by the Department of Public Safety and Corrections, Office of State Fire Marshal, LR 17:272 (March 1991), amended by the Department of Public Safety and Corrections, Office of State Fire Marshal, LR 23:1692 (December 1997), LR 43:971 (May 2017).

Chapter 5. Manufactured Housing

Subchapter A. General Requirements

§501. Definitions

A. In the regulations which follow, unless contract otherwise requires.

Act—the National Manufactured Home Construction and Safety Standards Act of 1974, as amended, the Housing and Community Development Act of 1974 (42 U.S.C. 01 et seq.).

Add-On—any structure (except a structure designed or produced as an integral part of a manufactured home) which, when attached to the basic home unit, increases the area, either living or storage, of the manufactured home.

Alteration—the replacement, addition, modification or removal of any equipment or installation after sale by a manufacturer to a retailer or distributor but prior to sale by a retailer to a purchaser which may affect the construction, fire safety, occupancy, plumbing, heat producing, or electrical system. It includes any modification made in the home which may affect the compliance of the home with the standards, but it does not include the repair or replacement of a component or appliance requiring connection to an electrical receptacle, where the replacement item is of the same configuration and ratings as the one being replaced. It also does not include an addition of an appliance requiring plug-in to an electrical receptacle, which appliance was not provided with the home by the manufacturer, if the rating of the appliance does not exceed the rating of the receptacle to which it is connected.

Certification Label—see *Label*.

Certification Report—the report prepared by the IPIA (see §501.A.*Primary Inspection Agency*.b) for each manufactured home manufacturing plant under 24 CFR Section 3282-362(b)(2) in which the IPIA provides a complete description of the initial comprehensive inspection of the plant; an evaluation of the quality assurance program under the approved quality assurance manual; and the identity of the DAPIA (See §501.A.*Primary Inspection Agency*.a) which approved the designs and quality assurance manual used in the plant. Where appropriate under 24 CFR Section 3282-362(b)(5), the certification report may be made by a DAPIA.

Component—any part, material or appliance which is built in as an integral part of the manufactured home during the manufacturing process.

Cost Information—information submitted by a manufacturer under Section 607 of the Act with respect to alleged cost increases resulting from action by the secretary, in such form as to permit the public and the secretary to make an informed judgment on the validity of the manufacturer's statements. Such terms include both the manufacturer's cost and the cost to retail purchasers.

Date of Manufacture—the date on which the label required by 24 CFR Section 3282-205(c) is affixed to the home.

Dealer—any person engaged in the sale, leasing, or distribution of new manufactured homes primarily to persons who in good faith purchase or lease home for purposes other than resale.

Defect—a failure to comply with an applicable federal manufactured housing safety and construction standard that renders the home or any part or component thereof not fit for the ordinary use for which it was intended, but does not result in an unreasonable risk of injury or death to occupants of the affected manufactured home. See related definitions of *imminent safety hazard*, *noncompliance*, and *serious defect*.

Design—drawings, specifications, sketches and the related engineering calculations, test and data in support of the configurations, structures and systems to be incorporated in homes manufactured in a plant.

Director—the director of the United States Office of Manufactured Housing and Construction Standards.

Distributor—any person engaged in the sale and distribution of manufactured housing for resale.

Failure to Conform—an imminent safety hazard related to the standards, a serious defect, or noncompliance and is used as a substitute for any of those terms.

HUD—the United States Department of Housing and Urban Development.

Imminent Safety Hazard—a hazard that presents an imminent and unreasonable risk of death or severe personal injury that may or may not be related to failure to comply with an applicable federal manufactured housing construction or safety standard. See related definitions of *Defect*, *Noncompliance*, and *Serious Defect*.

Joint Monitoring Team—a monitoring inspection team composed of personnel provided by the various state administrative agencies, or its contract agent, operating under a contract with HUD for the purpose of monitoring or otherwise aiding in the enforcement of the federal standards.

Label or *Certification Label*—the approved form of certification by the manufacturer that, under 24 CFR Section 3282-362(c)(2)(i), is permanently affixed to each transportable section of each home manufactured for sale to a purchaser in the United States.

Manufactured Housing—a structure, transportable in one or more sections, which in the traveling mode, is 8 body feet or more in width; or 40 body feet or more in length; or, when erected on site, 320 or more square feet; and which is built on a permanent chassis and designed to be used as a dwelling, with or without a permanent foundation when connected to the required utilities, including the plumbing, heating, air-conditioning and electrical systems contained therein; except that the term shall include any structure which meets all the requirements of this Chapter 5, except the size requirements and with respect to which the manufacturer voluntarily files a certification required by the secretary of the United States Department of Housing and Urban Development and complies with the standard established under the National Manufactured Housing Construction and Safety Standards Act of 1974, 42 U.S.C. 5401 et seq.

Manufactured Housing Construction—all activities relating to the assembly and manufacture of a manufactured home, including, but not limited to, those relating to durability, quality, and safety.

Manufactured Housing Safety—the performance of a manufactured home in such a manner that the public is protected against unreasonable risk of the occurrence of accidents due to the design or construction of such home, or any unreasonable risk of death or injury to the user or to the public if such accidents do occur.

Manufacturer—any person engaged in manufacturing or assembling manufactured housing, including any person engaged in importing homes for resale.

Noncompliance—a failure of a home to comply with a federal manufactured housing construction or safety standard that does not constitute a defect, serious defect, or imminent safety hazard. (See related definition of *Defect*, *Imminent Safety Hazard*, and *Serious Defect*.)

Owner—any person purchasing a home from any other person after the first purchase of the home, in good faith, for purposes other than resale.

Primary Inspection Agency (PIA)—a state/or private organization that has been accepted by the secretary in accordance with the requirements of Subpart H of the Manufactured Homes and Procedural Regulation. There are two types of PIAs.

a. Design Approval PIA (DAPIA), which evaluates and approves or disapproves manufactured home designs and quality control procedures; and

b. Production Inspection PIA (IPIA), which evaluates the ability of manufactured home manufacturing plants to follow approved quality control procedures and provides ongoing surveillance of the manufacturing process. Organizations may act as one or both of these types.

Purchaser—the first person purchasing a manufactured home in good faith for purposes other than resale.

Quality Assurance Manual—a manual, prepared by each manufacturer for its manufacturing plants and approved by a DAPIA which contains: a statement of the manufacturer's quality assurance program; a chart of the organization showing, by position, all personnel accountable for quality assurance; a list of tests and test equipment required; a station-by-station description of the manufacturing process; a list of inspections required at each station; and a list by title of personnel in the manufacturer's organization to be held responsible for each inspection. Where necessary, the quality assurance manual used in a particular plant shall contain information specific to that plant.

Red Tag—to affix a notice to a home which has been found to contain an imminent safety hazard or a failure to conform with any applicable standard. A *red tag* is the notice so affixed to the manufactured home.

Secretary—the Secretary of the United States Department of Housing and Urban Development.

Secretary's Agent—a party operating as an independent contractor under a contract with HUD.

Serious Defect—any failure to comply with an applicable federal manufactured housing construction and safety standard that renders the home or any part thereof not fit for the ordinary use for which it was intended and which results in an unreasonable risk of injury or death to occupants of the affected home.

Standards—the federal manufactured housing construction and safety standards promulgated under Section 604 of the Act, 42 U.S.C. 5403, Part 3280, of these regulations.

State—includes each of the several states, the District of Columbia, the Commonwealth of Puerto Rico, Guam, the Virgin Islands, the Canal Zone, and American Samoa.

State Administrative Agency (SAA)—an agency of a state which has been approved or conditionally approved to carry out the state plan for enforcement of the standards pursuant to Section 623 of the Act, 42 U.S.C. 5422, and Subpart G of the Federal Manufactured Homes Procedural and Enforcement Regulations.

State Plan Application—the application of a state organization which is submitted to the secretary for approval as a state administrative agency under Subpart G of the Federal Manufactured Homes Procedural and Enforcement Regulation.

System—a set or arrangement of materials or components related or connected as to form an operating entity, e.g., heating, ventilating and air-conditioning systems, and evaporative coolers.

Title I—Title I of the National Housing Act, 12 U.S.C. 1701, which authorizes HUD to insure loans made for the purchase of manufactured homes that are certified as meeting HUD requirements for dwelling quality and safety.

United States District Courts—the federal district courts of the United States and the United States courts of the Commonwealth of Puerto Rico, Guam, the Virgin Islands, the Canal Zone, and American Samoa.

AUTHORITY NOTE: Promulgated in accordance with R.S. 40:1651(B).

HISTORICAL NOTE: Promulgated by the Department of Public Safety, Office of State Fire Marshal, LR 8:17 (January 1982), amended by the Department of Public Safety and Corrections, Office of State Fire Marshal, LR 23:1693 (December 1997), LR 38:3235 (December 2012).

§503. Retailer Requirements

A. A retail location of new manufactured homes shall have a sign, a listed land line telephone, a public office, a minimum inventory of eight homes, and a product line. The office shall be staffed with at least one employee during all times that the office is opened for business.

B. A retail location of used manufactured homes shall have a sign, a listed land line telephone and a public office. The office shall be staffed with at least one employee during all times that the office is opened for business.

C. Retailers of used manufactured homes are any person engaged in the sale, leasing, or distribution of mobile homes or manufactured homes primarily to a person who in good faith purchases or leases mobile homes or manufactured homes for purposes other than resale.

D. The sign required by this section shall contain the full name of the retailer as appears on the current license issued by the Commission. The sign shall be visible to the public as they travel on the street or highway on which the retailer is located. No part of the sign shall be concealed or obstructed from view.

AUTHORITY NOTE: Promulgated in accordance with R.S. 51:911.32.A(2).

HISTORICAL NOTE: Promulgated by Department of Public Safety and Corrections, Office of State Fire Marshal, LR 38:3236 (December 2012).

§505. Inspections

A. The Uniform Standards Code for Mobile Homes, R.S. 51:911.32, allows employees and personnel under contract to the state fire marshal to enter, at a reasonable time, any factory, warehouse or establishment in which manufactured houses are manufactured, stored or held for sale, for the purpose of ascertaining whether housing construction and safety standards have been and are being met.

AUTHORITY NOTE: Promulgated in accordance with R.S. 40:1651(B).

HISTORICAL NOTE: Promulgated by the Department of Public Safety, Office of State Fire Marshal, LR 8:16 (January 1982), amended by the Department of Public Safety and Corrections, Office of State Fire Marshal, LR 23:1694 (December 1997).

§507. Handling of Consumer Complaints

A. All complaints concerning units constructed in compliance with the National Manufactured Housing Construction and Safety Standards Act of 1974 shall be handled in compliance with Subpart I of the federal regulations established pursuant to the Act.

1. Upon receipt of a consumer complaint or other information indicating the possible existence of a failure to conform or imminent safety hazard, the state fire marshal will review the complaint or information to determine where the home was manufactured and if a problem exists. All complaints shall be referred to the manufacturer or retailer if a problem is indicated. When there is information to indicate that homes with the same failure to conform, or imminent safety hazard may have been manufactured in more than one state, the complaint will simultaneously be forwarded to HUD and the home manufacturer.

2. Where the complaint is forwarded to the manufacturer, the manufacturer will be requested, in writing, to investigate the complaint within 20 days of receipt of the complaint and make a report to the state fire marshal. In the event that it appears from the complaint that an imminent safety hazard exists, the state fire marshal will simultaneously contact the manufacturer by telephone and make its own investigation in addition to forwarding the complaint, in writing, in an effort to expedite investigation and any necessary correction by the manufacturer.

3. Where the manufacturer has determined and reports that no imminent safety hazard, serious defect, defect, or noncompliance exists and the state fire marshal is able to concur from all available information, he will consider the complaint closed and so inform the manufacturer and complainants; however, if the state fire marshal is unable to concur with the manufacturer's report, he will make an investigation and within 10 days of receipt of the manufacturer's report shall inform the manufacturer of the

results of the investigation. If it is found that the manufacturer's report was correct, the state fire marshal will consider the matter closed.

4. Where, upon investigation, the state fire marshal determines that an imminent safety hazard, serious defect, defect or noncompliance may exist, he or his designated representative will notify the manufacturer to take necessary action. Where the manufacturer does not take action after notification by the state fire marshal and it appears that an imminent safety hazard or serious defect may exist, the state fire marshal will inform the manufacturer of its opinion and simultaneously forward to HUD documentation of the factual basis upon which such opinion was made, for administrative determination by HUD, pursuant to 24 CFR Section 3282.407(a). Where the manufacturer does not take action after notification by the state fire marshal, and it appears that a defect or noncompliance may exist, the manufacturer will be notified. The notice shall be sent to the manufacturer by certified mail and will include:

a. the preliminary determination by the state fire marshal;

b. the factual basis for the determination;

c. the date on which the determination was made;

d. the identifying criteria of the manufactured homes known to be affected;

e. notice to the manufacturer that a hearing or presentation of views may be requested, pursuant to 24 CFR Part 3282, Subpart D, to establish that there is no such defect or noncompliance;

f. notice to the manufacturer that the preliminary determination of defect or noncompliance shall become final unless the manufacturer responds within 15 days after receipt of such notice and requests a hearing or presentation of views to rebut the state fire marshal's determination;

g. notice to the manufacturer that any information upon which the determination has been based, such as test results, records of inspection, etc., shall be available for inspection by the manufacturer.

5. Where the manufacturer requests a hearing or presentation of views, one shall be promptly provided in accordance with the procedures outlined in the Administrative Procedure Act, R.S. 49:950 et seq.

6. Where the manufacturer fails to respond to the notice of preliminary determination or if the state fire marshal's board of review decides that the views and evidence presented by the manufacturer are insufficient to rebut the preliminary determination, the state fire marshal may make a final determination that a defect or noncompliance exists and will notify the manufacturer to make a notification and submit a plan in accordance with 24 CFR Section 3282.409. Within 10 days after receipt of the notice of final determination, the manufacturer may appeal to the secretary of the United States Department of Housing and Urban Development.

7. The manufacturer's plan for notification and correction, including contents of notice, time for implementation and completion of acts and reports, shall be made in accordance with the provisions of 24 CFR Section 3282.409 through 3282.413. When the manufactured home is in the hands of a distributor or retailers, it shall be handled in accordance with 24 CFR Section 3282.414.

8. The state fire marshal shall be responsible through oversight and remedial actions that the provisions of 24 CFR Part 3282, Subpart I, are carried out and may make inspections of any manufacturer corrections to assure compliance with 24 CFR Part 3282, Subpart I.

AUTHORITY NOTE: Promulgated in accordance with R.S. 40:1651(B).

HISTORICAL NOTE: Promulgated by the Department of Public Safety, Office of State Fire Marshal, LR 8:17 (January 1982), amended by the Department of Public Safety and Corrections, Office of State Fire Marshal, LR 23:1694 (December 1997), LR 38 3236 (December 2012).

§509. Notification and Correction Procedure

A. Manufacturer's Determination. When a consumer complaint is referred to the manufacturer and the manufacturer determines that an imminent safety hazard, serious defect, defect or noncompliance may exist and the manufacturer does not correct the imminent safety hazard or failure to conform within 30 days of the date on which the manufacturer determined the existence of an imminent safety hazard or failure to conform, the manufacturer shall prepare and submit a plan as provided for in 24 CFR Section 3282.409, to the state fire marshal.

B. Notification. The plan, including a copy of the notice as required by 24 CFR Section 3282.410, shall be submitted to the state fire marshal by the manufacturer and shall provide for notification by mail, to the first purchaser (not including any retailer or distributor of the affected manufacturer) of each manufactured home containing an imminent safety hazard, serious defect, defect or noncompliance and any subsequent purchaser to whom any warranty provided by the manufacturer or required by federal or state law has been transferred, to the extent feasible; by mail to any other person who is a registered owner of each manufactured home containing an imminent safety hazard, serious defect, defect or noncompliance and whose name has been returned to the manufacturer under the procedure of Record of Purchasers as provided for under 24 CFR Section 3282.410; by mail or other expeditious means to the retailers or distributors to whom such manufactured home was delivered. In the event the manufactured home has an imminent safety hazard or serious defect, the notification shall be forwarded by certified mail, if mailed.

C. Review

1. The state fire marshal will review the plan submitted by the manufacturer, including the contents of the notice, and either approve the plan as submitted or make modifications to the plan for compliance with the requirements of 24 CFR Section 3282.409 and notify the manufacturer of the approval or modification. The

manufacturer may contest the modification within five days of the approval of the plan or modification.

2. If the state fire marshal does not accept the manufacturer's position as to the modification, it shall act as follows: if the manufacturer contends that the manufactured home contains a defect rather than an imminent safety hazard or serious defect as the state fire marshal contends, the state fire marshal shall refer the matter to the secretary for determination under 24 CFR Section 3282.407(a).

3. The formal notification requirements which would result from any determination by the manufacturer under 24 CFR Section 3282.404 may be waived by the state fire marshal that would otherwise approve the plan upon receipt of satisfactory assurances from the manufacturer that:

a. the manufacturer has identified all possibly affected manufactured homes which have been sold to purchasers, retailers and distributors;

b. the manufacturer has corrected, at the manufacturer's expense, all affected manufactured homes; and

c. the repairs, in the state fire marshal's judgment, are adequate to remove the imminent safety hazard or failure to conform.

AUTHORITY NOTE: Promulgated in accordance with R.S. 40:1651(B).

HISTORICAL NOTE: Promulgated by the Department of Public Safety, Office of State Fire Marshal, LR 8:18 (January 1982), amended by the Department of Public Safety and Corrections, Office of State Fire Marshal, LR 23:1695 (December 1997), LR 38:3236 (December 2012).

§511. Oversight by the State Fire Marshal

A. Pursuant to 24 CFR Section 3282.405 and 3282.407, the state fire marshal will:

1. review plans submitted by manufacturers;

2. modify plans submitted by manufacturers where necessary for compliance with 24 CFR Section 3282.409;

3. notify the manufacturer of any modifications or necessary corrections;

4. approve plans submitted by manufacturers that comply with the requirements of 24 CFR Section 3282.409;

5. refer to the secretary of HUD any matter where:

a. the manufacturer contends that the manufactured home contains a defect rather than an imminent safety hazard or serious defect as determined by the state fire marshal;

b. the manufacturer contends that the number of manufactured homes affected is different from that determined by the state fire marshal;

c. the manufacturer contends that the contents of the notice or the correction are different from what the state fire marshal has determined;

d. the manufacturer and the state fire marshal agree that an imminent safety hazard or serious defect exists;

6. determine from records or otherwise that the time elements for implementation of the manufacturer's plan, as outlined in 24 CFR Section 3282.412, are carried out;

7. determine from records or otherwise that required correction of defects have been made by the manufacturer;

8. determine from records or otherwise that the manufacturer has complied with the requirements outlined in 24 CFR Section 3282.404(e) where the state fire marshal has waived the formal notification requirements that would result from any determination by a manufacturer to provide notification as outlined in 24 CFR Section 3282.404;

9. review reports submitted to it by manufacturers, DAPIA and IPIA to determine that the requirements outlined in 24 CFR Part 3382, Subpart I, are being complied with; and

10. review manufacturer records for incorrect determination, inadequate repairs or failure to make required repairs.

AUTHORITY NOTE: Promulgated in accordance with R.S. 40:1651(B).

HISTORICAL NOTE: Promulgated by the Department of Public Safety, Office of State Fire Marshal, LR 8:19 (January 1982), amended by the Department of Public Safety and Corrections, Office of State Fire Marshal, LR 23:1696 (December 1997).

§513. Amendments

A. In amending these regulations, the state fire marshal shall follow the procedure specified in R.S. 49:950 et seq., the Administrative Procedure Act, and any amendments thereto.

AUTHORITY NOTE: Promulgated in accordance with R.S. 40:1651(B).

HISTORICAL NOTE: Promulgated by the Department of Public Safety, Office of State Fire Marshal, LR 8:19 (January 1982), amended by the Department of Public Safety and Corrections, Office of State Fire Marshal, LR 23:1696 (December 1997).

§515. Appeals

A. Notwithstanding the provisions of 24 CFR Section 3282.152(f)(2) and (g)(2) relating to the conclusive effect of a final determination, any party, in a proceeding held at a SAA under this Chapter, including specifically the owners of affected manufactured homes, consumer groups representing affected owners and manufacturers (but limited to parties with similar substantial interest), may appeal to the SAA which is adverse to the interest of that party. This appeal on the record shall be made within 30 days of the date on which the final determination was made by the SAA.

AUTHORITY NOTE: Promulgated in accordance with R.S. 40:1651(B).

HISTORICAL NOTE: Promulgated by the Department of Public Safety, Office of State Fire Marshal, LR 8:19 (January 1982), amended by the Department of Public Safety and

Corrections, Office of State Fire Marshal, LR 23:1696 (December 1997).

§517. IPIA Fees

A. IPIA (In Plant Inspection Agency) fees for the inspection of the construction of manufactured housing within this state shall be as follows:

1. $20 for each manufactured home constructed within Louisiana;

2. $23 per hour for each hour that a field inspector monitors the manufactured housing construction within the Louisiana manufacturing facility;

3. $30 per hour for each hour the administrative personnel (architect and/or engineer) monitors the manufactured home construction within the Louisiana manufacturing facility.

B. The fees required shall be paid to the Office of State Fire Marshal, made payable to the Department of Public Safety, State of Louisiana.

AUTHORITY NOTE: Promulgated in accordance with R.S. 40:1651(B).

HISTORICAL NOTE: Promulgated by the Department of Public Safety, Office of State Fire Marshal, LR 8:19 (January 1982), amended by the Department of Public Safety and Corrections, Office of State Fire Marshal, LR 23:1696 (December 1997).

§519. Placement of Used Homes

A. In accordance with 24 CFR Ch. XX §3280.305 et seq., used manufactured homes in the secondary market shall be sited effective January 1, 2007 in accordance with federal wind zone standards applicable for new homes in Louisiana zone II and III as set forth in 24 CFR Ch. XX § 3280.305 et seq., and thereafter amended. However, if any manufactured home is sited or is located at a retail outlet within Louisiana wind zone II or III prior to January 1, 2007 and the siting of this home or the location of this home at a retail outlet within wind zone II or III can be definitively documented through such means as an installation permit sticker issued by and/or returned to the commission; a title which uniquely identifies your home and references the physical location of siting; documentation establishing the location of a home at a retail outlet within zone II or III or some other independent means of credible documentation, then such manufactured home will be allowed to transfer indefinitely within the wind zone where it is sited or located at a retail outlet prior to January 1, 2007. Additionally, such manufactured home may also transfer to a less stringent wind zone than the zone where it is sited or located at a retail outlet prior to January 1, 2007; however, a manufactured home may not transfer to a more stringent wind zone than the zone where it is sited or located at a retail outlet as of December 31, 2006, unless the construction of such home complies with appropriate federal and state construction standards. Violations of this provision may result in civil penalties being levied against the appropriate party by the commission.

AUTHORITY NOTE: Promulgated in accordance with R.S. 51: 911.26(E).

HISTORICAL NOTE: Promulgated by the Office of the Governor, Manufactured Housing Commission, LR 33:645 (April 2007).

Subchapter B. Manufactured and Modular Housing (Installation)

§521. Definitions

A. When used in these regulations, these terms shall have the following meanings.

Fire Marshal—the assistant secretary of the Office of State Fire Marshal of the State of Louisiana.

Installation—the construction of a foundation system and the placement or erection of a manufactured home or a mobile home on the foundation system. Installation includes, without limitation, supporting, blocking, leveling, securing, or anchoring such home and connecting multiple or expandable sections of such home together and to the foundation.

Installation Permit—a permit issued by the fire marshal to a licensed installer or the homeowner who must certify that the home is in compliance with this Part.

Installation Permit Sticker—a sticker issued by the fire marshal, along with an installation permit, which is to be affixed to the home to signify that the home is in compliance with R.S. 51:912.22. Installation standards for manufactured homes and mobile homes.

Installer—a person responsible for the installation of a manufactured home or mobile home and who is required to obtain a license pursuant to the provisions of R.S. 51:912.

Manufactured Home—a new or used structure transportable in one or more sections, which is 8 body feet or more in width or 40 body feet or more in length or, when erected on site, is 320 or more square feet and which is built on a permanent chassis and designed to be used as a dwelling with or without a permanent foundation when connected to the required utilities and includes the plumbing, heating and air conditioning, and electrical systems contained therein. For purposes of LAC 55:V.Chapter 5, the terms *mobile home*, *manufactured home*, and *manufactured housing* may be used interchangeably and apply only to structures bearing the permanently affixed seal of the U.S. Department of Housing and Urban Development.

Manufacturer—any person who constructs or assembles manufactured housing.

Person—a natural person, association, or group of natural persons, partnership, company, corporation, institution, or legal entity.

Retailer—any person engaged in the sale, leasing, or distribution of mobile homes or manufactured housing primarily to a person who, in good faith, purchases or leases a mobile home or manufactured housing for purposes other than resale.

Salesman—any person employed by a retailer for purposes of selling manufactured housing to the public.

Transporter—an individual who transports the manufactured home or mobile home to the site of installation but does not perform the blocking and/or anchoring of the home. However, individuals who transport manufactured homes from the factory to the retailer's location are exempt from this definition.

AUTHORITY NOTE: Promulgated in accordance with R.S. 51:911.32(A)(2).
HISTORICAL NOTE: Promulgated by Department of Public Safety and Corrections, Office of State Fire Marshal, LR 24:695 (April 1998), amended LR 26:2009 (September 2000), LR 38:3237 (December 2012).

§523. General

A. Any person who engages in the business of installing manufactured homes, who directs, supervises, or controls installations or performs repairs to an existing installation shall have an appropriate, valid Louisiana manufactured housing installer's license issued by the Office of State Fire Marshal.

B. Persons who have had a license issued by this office revoked may not apply for approval as an installer within one year of the date of revocation.

C. An installer license shall be granted only to a person who bears a good reputation for honesty, trustworthiness, integrity, and competence to transact business in such a manner as to safeguard the interest of the public and only after satisfactory proof of such qualifications has been presented to the commission. If an applicant for a license is a partnership or a corporation, the qualifications of each member of the partnership or officer of the corporation may be considered by the commission in issuing or refusing to issue a license.

AUTHORITY NOTE: Promulgated in accordance with R.S. 51:911.32(A)(2).
HISTORICAL NOTE: Promulgated by Department of Public Safety and Corrections, Office of State Fire Marshal, LR 24:696 (April 1998), amended LR 38:3237 (December 2012).

§525. License Exceptions

A. Notwithstanding the provisions of LAC 55:V.523, the following individuals are not required to have a license as provided therein:

1. when the individual installing the manufactured home is the owner thereof, or the manufactured home is owned by a member of the individual's immediate family, and the manufactured home is not intended for sale, exchange, lease, or rent;

2. an individual installing additional blocking for support;

3. an individual installing a manufactured home when the manufactured home is installed on a retailer's distributor's, or manufacturer's sales or storage lot or at a show and is not occupied or intended to be occupied. This exemption does not include those manufactured homes installed in manufactured homes parks or manufactured homes subdivisions;

4. an individual performing plumbing or electrical work when the individual doing the work is a licensed plumber or electrician;

5. an individual performing maintenance, repairs, or corrections to an installation for the purpose of customer service on behalf of manufacturers or retailers.

AUTHORITY NOTE: Promulgated in accordance with R.S. 51:911.32(A)(2).
HISTORICAL NOTE: Promulgated by Department of Public Safety and Corrections, Office of State Fire Marshal, LR 24:696 (April 1998), amended LR 38:3237 (December 2012).

§527. Manufactured Housing Installer's License

A. Effective May 1, 1998, a manufactured home may not be installed without a licensed manufactured housing installer supervising installation work being performed. The licensed manufactured housing installer is responsible for the reading, understanding, and following of the manufacturer's installation instructions and performance of nonlicensed workers engaged in the installation of the home.

AUTHORITY NOTE: Promulgated in accordance with R.S. 51:911.32(A)(2).
HISTORICAL NOTE: Promulgated by Department of Public Safety and Corrections, Office of State Fire Marshal, LR 24:696 (April 1998), amended LR 38:3237 (December 2012).

§529. Requirements for Installer's License

A. To be licensed as a manufactured housing installer, an applicant shall have at least one year's experience installing manufactured homes.

B. Verification of experience shall be submitted in the form of sworn statements signed by the applicant before a notary public.

C. In addition to the completed application form and application fee, an applicant shall provide the following:

1. personal identification;

2. proof of workers' compensation insurance;

3. proof of vehicle liability as required by law.

D. After January 1, 1999, in addition to the requirement of §529.A, B, and C, the application must include a certificate of completion as evidence of having attended and received a passing grade in a fire marshal-approved manufactured housing installation education program.

AUTHORITY NOTE: Promulgated in accordance with R.S. 51:911.32.A(2).
HISTORICAL NOTE: Promulgated by Department of Public Safety and Corrections, Office of State Fire Marshal, LR 24:696 (April 1998).

§531. Installer's Responsibilities and Limits

A. Work covered by an installer's license shall be limited to:

1. installing manufactured homes in accordance with applicable statutes, administrative rules and regulations, adopted codes, and standards;

2. installing the support, tie down and the structural connections for manufactured housing in accordance with applicable statutes, rules and regulations, adopted codes, and standards;

3. providing plumbing, electrical, and mechanical connections of and to the manufactured home in accordance with applicable statutes, rules and regulations, adopted codes, and standards;

4. performing plumbing, mechanical, and electrical tests in accordance with applicable statutes, rules and regulations, adopted codes, and standards, as required for installation;

5. supervising individuals installing manufactured homes.

B. An installer shall:

1. assure the manufactured home is in compliance with the Louisiana Uniform Standard Code for Manufactured Housing and Mobile Homes;

2. perform electrical and plumbing tests if the plumbing and electrical connections were made by the installer;

3. close and secure all access panels and covers on or under the manufactured home;

4. assure the manufactured home installation is in compliance with the applicable statutes, rules and regulations, adopted codes, and standards;

5. assure that all doors and windows are adjusted, secured in place, and operational;

6. assure that all "ship loose" flue vents and chimneys are installed, secured in place, and capped according to their listing;

7. complete all reporting and application forms required by these rules;

8. leave the manufacturer's installation instructions at the installation site to be available at the time of the inspection if used for any part of the installation and thereafter left with the owner thereof.

AUTHORITY NOTE: Promulgated in accordance with R.S. 51:911.32.A(2).

HISTORICAL NOTE: Promulgated by Department of Public Safety and Corrections, Office of State Fire Marshal, LR 24:696 (April 1998).

§533. Installer's Responsibilities to the Consumer

A. An installer shall:

1. ensure all phases of the installation work performed by the installer are complete and in compliance with the applicable statutes, rules and regulations, adopted codes, and standards;

2. notify the Office of State Fire Marshal of the installation work performed by the installer;

3. correct all applicable non-conformances within 30 days of receipt of a correction notice from the Office of State Fire Marshal.

AUTHORITY NOTE: Promulgated in accordance with R.S. 51:911.32.A(2).

HISTORICAL NOTE: Promulgated by Department of Public Safety and Corrections, Office of State Fire Marshal, LR 24:697 (April 1998).

§535. Monthly Report

A. An installer shall submit a monthly installation report to the fire marshal by the tenth day of the following month on forms provided by the fire marshal and provide all information requested thereon.

B. A report shall be filed every month, despite the fact that no homes were installed.

C. Reports shall be submitted on forms provided by the Office of State Fire Marshal and provide all information requested thereon.

AUTHORITY NOTE: Promulgated in accordance with R.S. 51:911.32(A)(2).

HISTORICAL NOTE: Promulgated by Department of Public Safety and Corrections, Office of State Fire Marshal, LR 24:697 (April 1998), amended LR 26:2009 (September 2000), LR 38:3237 (December 2012).

§537. Issuance and Possession of License

A. A manufactured home installer license shall be issued to the person named on the application and shall be nontransferable.

B. The licensee shall publicly display said license at licensee's principal place of business and physically possess a copy of the license when at the job site.

C. The licensee shall provide satisfactory evidence of being licensed when requested to by the Office of State Fire Marshal.

AUTHORITY NOTE: Promulgated in accordance with R.S. 51:911.32.A(2).

HISTORICAL NOTE: Promulgated by Department of Public Safety and Corrections, Office of State Fire Marshal, LR 24:697 (April 1998).

§539. License Renewal

A. Licenses issued under LAC 55:V.Chapter 5 shall expire on December 31 of the year following issuance.

B. An application for renewal of a current license shall include:

1. the required fees as set forth in R.S. 51:912.27(A);

2. all information requested on the form by the Office of State Fire Marshal.

C. Forty-five days prior to license expiration, the fire marshal shall mail each licensee a license renewal application.

D. A license renewal application must be submitted to the fire marshal prior to the expiration date of the license. Persons wishing to apply for a license after their license has expired must reapply for a new license and meet all requirements of a new applicant.

AUTHORITY NOTE: Promulgated in accordance with R.S. 51:911.32(A)(2).

HISTORICAL NOTE: Promulgated by Department of Public Safety and Corrections, Office of State Fire Marshal, LR 24:697 (April 1998), amended LR 38:3237 (December 2012).

§543. License Suspension or Revocation; Imposition of Civil Penalties

A. The fire marshal may, after notice and hearing as required by R.S. 49:950 et seq., suspend or revoke an installer's license issued by this office, or impose a civil penalty as provided for by R.S. 40:1563.4, for violations of applicable statutes, rules, regulations, adopted codes, or standards or lawful orders issued by the fire marshal.

B. The schedule of fines shall be as follows:

1. First offense of the following violations:

a. failure to timely renew license—$125;

b. failure to timely file required report—$100.

2. First offense of the following violations:

a. failure to properly set up and install the manufactured home—$500.

C. The schedule of fines shall be as follows:

1. performance of any installation services under uniform standards code for mobile homes and manufactured housing by a non-licensed person excluding a homeowner—$1,000;

2. failure to install the permit sticker on the mobile home or manufactured home—$100;

3. unauthorized or improper transfer of permit sticker—$1,000;

4. soliciting or contracting for service from unlicensed installer by a retailer, homeowner, or other party—$1,000;

5. holding oneself or one’s business out for hire to perform any installation service or otherwise offering to perform any such task by an unlicensed installer—$1,000;

6. failure to properly complete timely monthly installation report with information required—$100;

7. the re-inspection report indicates that the required corrections were not made to home after the installer notified the Office of State Fire Marshal that the corrective work was done—$750;

8. installing home into an improper wind zone—$1,000.

AUTHORITY NOTE: Promulgated in accordance with R.S. 51:911.32(A)(2).

HISTORICAL NOTE: Promulgated by Department of Public Safety and Corrections, Office of State Fire Marshal, LR 24:697 (April 1998), amended LR 26:2009 (September 2000), LR 38:3237 (December 2012).

§545. Education: Requirements, Installer's License

A. Beginning January 1, 1999, all licensed installers shall attend at least one fire marshal-approved installation class per calendar year.

B. Classes shall only be provided by the fire marshal or a fire marshal-approved provider and shall include instruction as to statutes, codes, rules, and regulations or standards and/or changes thereof and proper installation procedures.

C. Prior to the end of the license period, licensees will be notified by the fire marshal of class requirements and class availability for the next license period.

D. The fire marshal shall not renew licenses of licensees who did not attend required classes.

AUTHORITY NOTE: Promulgated in accordance with R.S. 51:911.32(A)(2).

HISTORICAL NOTE: Promulgated by Department of Public Safety and Corrections, Office of State Fire Marshal, LR 24:698 (April 1998).

§547. Course Curriculum Requirements for Education Provider Training

A. The course curriculum shall be submitted to the fire marshal for approval and shall include a detailed description of course content and materials.

B. The course curriculum for manufactured house installers shall, at a minimum, include the following area of training:

1. definitions, as provided in the "Louisiana Minimum Standards for Installation of Manufactured Homes and Mobile Home" law;

2. license and registration requirements;

3. permits and penalties;

4. installer qualification;

5. location of manufactured homes;

6. foundation systems;

7. structural connections;

8. anchoring systems;

9. electrical connections;

10. plumbing connections;

11. mechanical connections;

12. fuel gas piping connections;

13. fire protection and separation;

14. underfloor enclosures, access, and ventilation;

15. alternate manufactured housing uses;

16. accessory buildings and structures;

17. alterations, repairs, and additions.

C. Within 30 days of notification of any change in course curriculum requirements adopted by the fire marshal, the provider shall submit a revised curriculum to the fire marshal for approval.

D. The provider shall notify the fire marshal, in writing, seven days prior to each class, indicating the time, date, and location of the class. The fire marshal's representative shall be permitted to audit any class, without fee or cost for entry.

AUTHORITY NOTE: Promulgated in accordance with R.S. 51:911.32(A)(2).

HISTORICAL NOTE: Promulgated by Department of Public Safety and Corrections, Office of State Fire Marshal, LR 24:698 (April 1998), amended LR 38:3238 (December 2012).

§549. Requirements for Education Provider Instructors

A. Instructors shall be employees of the Office of State Fire Marshal who have been authorized to teach installation classes by the state fire marshal.

B. Refresher classes may be offered by the LA Manufactured Housing Association.

AUTHORITY NOTE: Promulgated in accordance with R.S. 51:911.32(A)(2).

HISTORICAL NOTE: Promulgated by Department of Public Safety and Corrections, Office of State Fire Marshal, LR 24:698 (April 1998), amended LR 38:3238 (December 2012).

§551. Inspections by Office of State Fire Marshal

A. Upon request for inspection by a Louisiana-licensed retailer, manufacturer, installer, or the homeowner, the Office of State Fire Marshal shall inspect the home to determine compliance with the applicable sections of R.S. 51:912.21-R.S. 912.28 regarding installation.

B. Upon completion of the requested inspection the Office of State Fire Marshal will present to the requesting party and the homeowner an inspection report indicating the findings of said inspection.

C. The requesting party will reimburse the Office of State Fire Marshal for the inspection in accordance with the provisions of R.S. 51:911.32(3).

D. The fee shall be $40.

AUTHORITY NOTE: Promulgated in accordance with R.S. 51:911.32(A)(2).

HISTORICAL NOTE: Promulgated by Department of Public Safety and Corrections, Office of State Fire Marshal, LR 24:698 (April 1998), amended LR 38:3238 (December 2012).

§553. Pier Spacing and Construction

A. In accordance with R.S. 51:912.23(1)(a) the following table and figures shall be utilized for installation of piers.

TABLE A

PIER SPACING TABLE

Soil Class	1,000 PSF		1,500 PSF		2,000 PSF		2,500 PSF		3,000 PSF	
Footer Size	4"x16"x16"	6"x20"x20"	4"x16"x16"	6"x20"x20"	4"x16"x16"	6"x20"x20"	4"x16"x16"	6"x20"x20"	4"x16"x16"	6"x20"x20"
Max. Pier Space	3'	4'6"	4'	6'6"	6'	9'	8'	11'	9'	11'

(Note: Pier Measurements are from Center to Center)

FIGURE A

BLOCKING (Single Tiered)

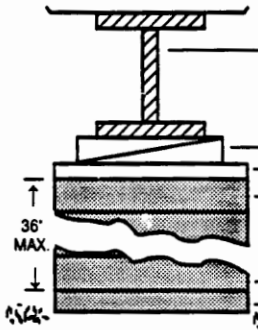

I-Beam (Frame)

Wood Shims or other material approved and listed by the department (1½" Maximum)

Cap - 2" x 8" x 16" Hardwood/Pressure Treated or other material approved and listed by the department

Solid or Celled Concrete Blocks

Ground Level

Footer or Pier Foundation - 4" x 16" x 16" Solid (One Piece) or other material approved and listed by the department

Sod and Organic Material Removed

FIGURE B

BLOCKING (Double Tiered and Block Interlocked)

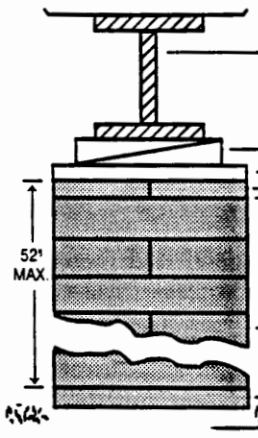

I-Beam (Frame)

Wood Shims or other material approved and listed by the department (1½" Maximum)

(Option) Hardwood or Pressure Treated Plate (1" x 8" x 16" Minimum)

Cap - 4" x 16" x 16" Solid Block
2 - 2" x 8" x 16" Hardwood/Pressure Treated or other material approved and listed by the department
(Option 2 - 4" x 8" x 16") Must be perpendicular to I-beam

Solid or Celled Concrete Block

Ground Level

Footer or Pier Foundation - 4" x 16" x 16" Solid Block (One Piece) or other material approved and listed by the department

Sod and Organic Material Removed

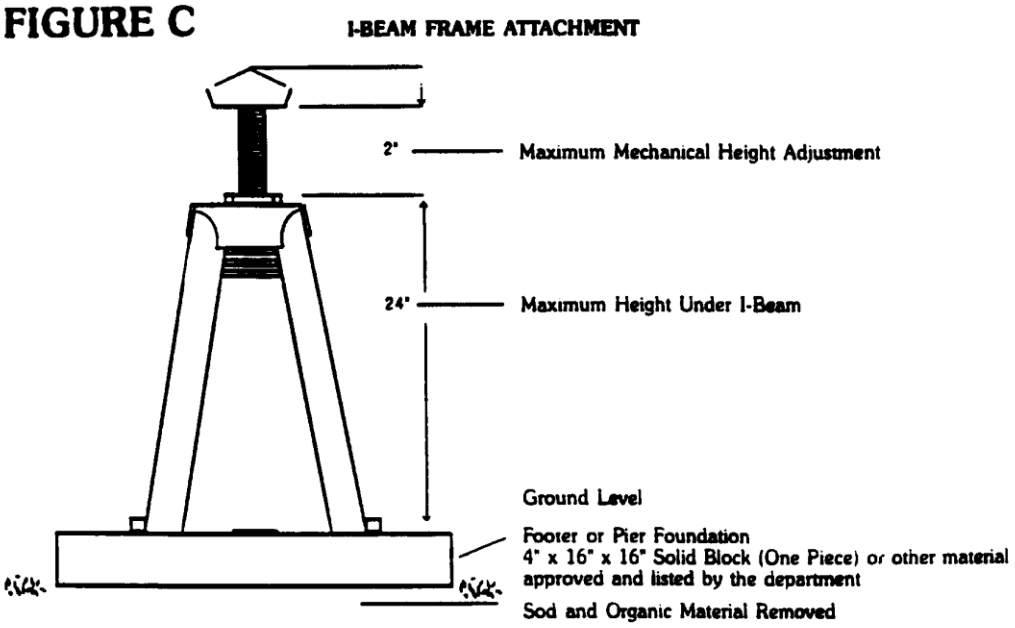

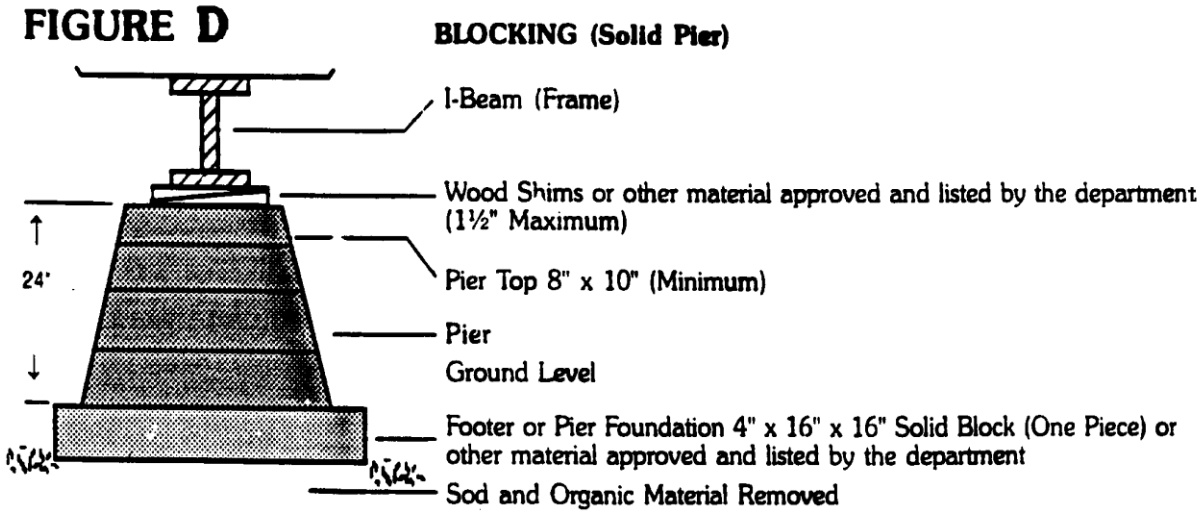

AUTHORITY NOTE: Promulgated in accordance with R.S. 51:911.32.A(2).

HISTORICAL NOTE: Promulgated by Department of Public Safety and Corrections, Office of State Fire Marshal, LR 24:699 (April 1998).

Subchapter C. Repairs

§555. Definitions

A. When used in these regulations, these terms shall have the following meanings.

Act—the National Manufactured Home Construction and Safety Standards Act of 1974, as amended, the Housing and Community Development Act of 1974 (42 U.S.C. 5401 et seq.).

HUD—the United States Department of Housing and Urban Development.

Inspect—a visual examination of manufactured homes to verify that it appears to be in operating condition and is free of physical damage.

Local Jurisdiction—city, town, township, parish, village, or other general purpose political subdivision of the State of Louisiana that has the authority to make legal pronouncements and administer judicial and regulatory enforcement to individuals and companies who are

conducting transactions within the given geographical location.

LSUCCC—the Louisiana State Uniform Construction Code Council.

Manufactured Home and *Manufactured Housing*—a prefabricated, factory built home built on a permanent chassis which can be transported in one or more sections and is typically used as a permanent residential dwelling unit. Homes built since 1976 are constructed to standards and codes, as promulgated by the United States Department of Housing and Urban Development (HUD), under the National Manufactured Home Construction and Safety Standards Act of 1974, as amended, the Housing and Community Development Act of 1974, 42 U.S.C. 5401 et seq., as amended. Further, the terms "manufactured home" and "manufactured housing" may be used interchangeably and apply to structures bearing the permanently affixed seal of the United States Department of Housing and Urban Development.

Public Entity—the state and any of its branches, departments, offices, agencies, boards, commissions, instrumentalities, officers, officials, employees, and political subdivisions and the departments, offices, agencies, boards, commissions, instrumentalities, officers, officials and employees of such political subdivision.

Standards—the federal manufactured housing construction and safety standards promulgated under Section 604 of the Act, 42 U.S.C. 5403, Part 3280.

AUTHORITY NOTE: Promulgated in accordance with R.S. 51:911.26(E).

HISTORICAL NOTE: Promulgated by the Department of Public Safety, Office of State Fire Marshal, LR 46:190 (February 2020).

§557. Repair Requirements

A. All repairs made to used manufactured homes constructed after July 15, 1976 that are no longer in compliance with the standards to which they were built or standards and codes, as promulgated by the United States Department of Housing and Urban Development (HUD), under the National Manufactured Home Construction and Safety Standards Act of 1974, 42 U.S.C. 5401 et seq., as amended, shall be in accordance with the standards incorporated by reference in the most current edition of the National Manufactured Home Construction and Safety Standards, specifically CFR Title 24, Part 3280.4.

B. Pursuant to R.S. 40:1730.23(B), repairs to driveways, steps, decks, or other similar accessory or work, not including any additional living area or other type of heated and cooled space outside of the original footprint of the manufactured home, shall be performed in accordance with the standards referenced herein.

C. The Office of State Fire Marshal shall use employees that are registered with the LSUCCC as building officials to oversee inspection of all repairs, not to include repairs which are performed under warranty and/or repairs pursuant to installations and set ups of manufactured homes. Upon completion of a final, approved inspection, the Office of State Fire Marshal shall provide all applicable reports to the local governing authority, which may utilize the report in determining the reinstatement of services, utilities, and any and all other amenities that were discontinued due to the damage incurred to the manufactured home which prompted the repairs.

D. Inspections shall be limited to that which is visible and accessible without requiring deconstruction or destructive testing.

E. The owner of a structure shall employ an electrician that is licensed in the state of Louisiana to perform any needed repairs to the electrical system. Upon the letterhead of the licensed electrician, it shall state the address of the location of the manufactured home where the work was executed, the date that the work was completed, the scope of the work performed and the standards applied to the scope of work. It shall also contain a statement that the work has been completed in accordance with the referenced standards.

F. In the absence of the availability of the employees of the Office of State Fire Marshal who are registered building officials, the Office of State Fire Marshal shall give written notification to the local jurisdictions to conduct said inspections.

G. Pursuant to R.S. 9:2798.1, liability shall not be imposed on public entities or their officers or employees based upon the exercise or performance or the failure to exercise or perform their policymaking or discretionary acts when such acts are within the course and scope of their lawful powers and duties. These provisions are not applicable:

1. to acts or omissions which are not reasonably related to the legitimate governmental objective for which the policymaking or discretionary power exists; or

2. to acts or omissions which constitute criminal, fraudulent, malicious, intentional, willful, outrageous, reckless, or flagrant misconducts.

AUTHORITY NOTE: Promulgated in accordance with R.S. 51:911.26(E), R.S. 51:911.26(F)(11) and R.S. 40:1730.23(B).

HISTORICAL NOTE: Promulgated by the Department of Public Safety, Office of State Fire Marshal, LR 45:3 (April 2019), effective March 25, 2019, amended LR 46:190 (February 2020).

Chapter 9. Tents and Tenting Material

§901. Definitions

A. For the purpose of this rule the following definitions shall apply.

Flooring Material—pliable material used for flooring in tentage but excluding such articles as rugs or carpets placed in a tent which are not an integral part of the tent.

Tentage—any mobile or portable temporary shelter designed to protect persons from the elements, all or a portion of the covering which is made of fabric or other pliable materials.

Wall and Top Material—any pliable material used in tentage for other than flooring including walls, roofs, tops doors, window screens, awnings, flies, and canopies.

AUTHORITY NOTE: Promulgated in accordance with R.S. 40:1563.

HISTORICAL NOTE: Promulgated by the Department of Public Safety, Office of Fire Protection, LR 1:168 (March 1975), amended LR 6:75 (February 1980).

§903. Specification Standards

A. No person shall sell or keep for sale any tentage as such defined in these regulations unless all pliable material contained therein meets the standards of Canvass Products Association International Specification No. 84 hereinafter referred to as CPAI-84, as amended from time-to-time.

B. Tentage which is not manufactured or fabricated in accordance with the standards of CPAI-84 and is not certified and labeled in accordance with these rules shall not be manufactured and/or sold in the state of Louisiana.

AUTHORITY NOTE: Promulgated in accordance with R.S. 40:1563.

HISTORICAL NOTE: Promulgated by the Department of Public Safety, Office of Fire Protection, LR 1:168 (March 1975), amended LR 6:75 (February 1980).

§905. Certification

A. Each lot of flame retardant material accepted by any wholesale or retail by any wholesale or retail distributor of tentage within the state of Louisiana shall be accompanied by a written certification from the supplier thereof stating that it meets the flame retardant requirements of the CPAI-84 and shall give the lot number and yardage therein.

AUTHORITY NOTE: Promulgated in accordance with R.S. 40:1563.

HISTORICAL NOTE: Promulgated by the Department of Public Safety, Office of Fire Protection, LR 1:168 (March 1975), amended LR 6:76 (February 1980).

§907. Labels

A. A label or labels containing the following information shall be permanently affixed to each item of tentage sold in the state of Louisiana:

1. certification—a statement that the materials used in the manufacture of the item meet the flame retardant requirements of CPAI-84;

2. manufacturer's identification—an identification of the manufacturer of the item, unless the item bears a private label in which case it shall identify the private labeler and shall also contain a code mark which will permit the seller of the item to identify the manufacturer thereof to the purchaser upon request;

3. serial number—a number enabling the manufacturer to identify, from his records, the suppliers and suppliers' lot numbers of the certified materials used in the item. The manufacturer shall also maintain records identifying the parties to whom he sold camping tentage. Further, he shall maintain records identifying items manufactured from lots of certified material. Records shall be maintained for four years;

4. care information—instructions designed to protect the item from agents or treatments known to be detrimental to the flame retardant properties of the material and to warn against the introduction of high heat sources.

AUTHORITY NOTE: Promulgated in accordance with R.S. 40:1563.

HISTORICAL NOTE: Promulgated by the Department of Public Safety, Office of Fire Protection, LR 1:168 (March 1975), amended LR 6:76 (February 1980).

Chapter 13. Health Care Facilities; Hospitals

§1301. Emergency Generators for Health Care Facilities

A. In addition to the requirements of the *Life Safety Code* as set forth in previous regulations, all hospitals, skilled nursing facilities or any other facility utilizing life support systems on a 24-hour day basis shall comply with the following.

1. Emergency power must be provided in conformity with NFPA Code 99 for a minimum 48 hour duration.

AUTHORITY NOTE: Promulgated in accordance with R.S. 40:1651(B).

HISTORICAL NOTE: Promulgated by the Department of Public Safety, Office of State Fire Marshal, LR 8:15 (January 1982), amended by the Department of Public Safety and Corrections, Office of State Fire Marshal, LR 15:95 (February 1989), LR 23:1697 (December 1997), LR 32:109 (January 2006).

§1303. Hospital Fire Lanes

A. There shall be no parking or stopping of any kind in fire lanes designated by the state fire marshal or his deputy in and around hospitals, nursing homes, convalescence facilities and any other building used for the same or similar purposes.

B. After the fire marshal has designated the fire lanes, it shall be the responsibility of the above described institution to pay for and to erect suitable signs notifying everyone that there shall be no parking in the designated fire lanes by order of the state fire marshal; failure to obey this order shall subject the violator to a fine of $1,000, or one year in jail, or both.

C. The fire marshal, his certified local authorities, or local law enforcement officials shall remove any vehicle parked in any fire lane in the state of Louisiana by any means necessary and shall assess the cost of removal against the owner of said vehicle by storing said vehicle and refusing to release said vehicle until all costs incident to the removal and storage of said vehicle have been paid by the owner.

D. Owners and occupants of the property on which fire lanes are located are hereby charged with the responsibility of notifying the fire marshal, his certified local authorities, or local law enforcement officials of the existence of any vehicles parked in those fire lanes; and in the event that they are unable to contact the fire marshal, his certified local authorities, or local law officials, the owner and occupant are hereby charged with the responsibility of and are hereby authorized to remove any vehicle parked in those fire lanes by any means necessary and to assess the cost of same

against the owner of said vehicle by storing said vehicle and refusing to release said vehicle until all costs incident to the removal and storage of said vehicle have been paid by the owner.

AUTHORITY NOTE: Promulgated in accordance with R.S. 40:1651(B).

HISTORICAL NOTE: Promulgated by the Department of Public Safety, Office of Fire Protection, LR 1:144 (February 1975), repromulgated LR 6:73 (February 1980), amended LR 6:659 (November 1980), amended by the Department of Public Safety and Corrections, Office of State Fire Marshal, LR 23:1697 (December 1997).

Chapter 15. Public Places in General

§1501. Equal Access for Disabled Individuals

A. Buildings, structures, public facilities, governmental facilities and improved areas built between January 1, 1978 and August 14, 1995 shall be covered by the standards put forward in ANSI 117.1. Such entities built on or after August 14, 1995 and before September 30, 2011 shall be covered by the ADAAG guidelines to the Americans with Disabilities Act in effect on September 1, 1994. Such entities built on or after October 1, 2011 shall be covered by the Americans with Disabilities Act and *Architectural Barriers Act Accessibility Guidelines* published July 23, 2004 (ADA-ABA).

B. Multi-family dwelling units of more than 15 dwelling units must have at least 5 percent but no fewer than 1 dwelling unit which meets the regulations specified by the Americans with Disabilities Act and *Architectural Barriers Act Accessibility Guidelines* published July 23, 2004 (ADA-ABA) for residential facilities, sections 233 and F233 as applicable.

C. Any dwelling unit in a facility which incorporates four or more dwelling units shall be made accessible in accordance with the *HUD Fair Housing Accessibility Guidelines* published on March 6, 1991, 56 *Federal Register* 9472, 24 CFR chapter 1, subchapter A, appendix II and III (1991) and the *Supplemental Notice to Fair Housing Accessibility Guidelines: Questions and Answers about the Guidelines*, published on June 28, 1994, and the *HUD Fair Housing Act Design Manual*.

AUTHORITY NOTE: Promulgated in accordance with R.S. 40:1563(F) and R.S. 40:1734(B).

HISTORICAL NOTE: Promulgated by the Department of Public Safety, Office of Fire Protection, LR 4:465 (November 1978), repromulgated LR 6:74 (February 1980), amended by the Office of State Fire Marshal, LR 7:588 (November 1981), amended by the Department of Public Safety and Corrections, Office of State Fire Marshal, LR 23:1698 (December 1997), LR 32:1906 (October 2006), LR 43:971 (May 2017).

§1503. Smoking in Places of Public Assembly Prohibited

A. There shall be no smoking in the public assembly areas of any churches, schools and theaters; this shall not prohibit the owners and/or operators of these particular places of public assembly from creating and designating smoking areas which are constructed and maintained to safeguard the life and safety of the individuals utilizing the facilities in question.

B. There shall be no smoking where flammable materials and substances are being stored, manufactured, handled or dispensed.

C. There shall be no smoking in any areas which have been designated by the state fire marshal as hazardous and for which reasons he has posted or caused to be posted a sign specifically indicating that there shall be no smoking in that particular area.

AUTHORITY NOTE: Promulgated in accordance with R.S. 40:1651 B.

HISTORICAL NOTE: Promulgated by the Department of Public Safety, Office of Fire Protection, LR 6:74 (February 1980), amended by the Department of Public Safety and Corrections, Office of State Fire Marshal, LR 23:1698 (December 1997).

§1505. Overcrowding

A. There shall be no overcrowding in any auditorium or place of public assembly. In the future (after January 1, 1975), no contracts with the owners of auditoriums or places of public assembly shall allow the sale of tickets for the entry of any more individuals than can be seated in that auditorium or place of public assembly. All contracts for the use of said auditorium or place of public assembly shall provide that the owners of the auditorium or place of public assembly shall provide the tickets for the event for which the promoter of the event may be required to pay the cost.

B. There shall be no more individuals permitted in said auditorium or place of public assembly than can be accommodated by the number of seats and the arrangement of said seats as approved by the fire marshal or a certified local authority. Seating shall be in accordance with NFPA 101:31-2.4.1 (1994 Edition).

C. The promoters of any event in said auditorium or place of public assembly shall be required to pay the cost of additional security to assure that no more individuals enter said auditorium or place of public assembly than can be accommodated by the seating arrangement; furthermore, the promoters shall provide the owners, the municipalities and the state with adequate insurance to cover the damage, property or personal injuries, which can foreseeably be expected to occur as a result of the circumstances of this congregation of people.

AUTHORITY NOTE: Promulgated in accordance with R.S. 40:1651(B).

HISTORICAL NOTE: Promulgated by the Department of Public Safety, Office of Fire Protection, LR 1:145 (February 1975), repromulgated LR 6:74 (February 1980), amended by the Department of Public Safety and Corrections, Office of State Fire Marshal, LR 23:1698 (December 1997).

§1507. Storage of Flammables in Places of Public Assembly

A. In pursuit of the requirements of R.S. 40.1575, it is hereby ordered that the storage of all flammable materials in all state buildings and all places of public assembly shall be made in fireproof containers, that all state buildings and places of public assembly shall be regularly policed to clean up and place in fireproof containers all flammable materials;

and all places of storage shall be arranged and maintained in such a manner that exit from said places and access to said places for the purposes of firefighting is not in any way impeded.

B. Flammable materials include, but are not limited to, paper, cigarettes, food wrappings, cardboard container for paper, and office supplies. Flammable materials for the purpose of this regulation would not include furniture, clerical implements, and machinery while said articles are in use, unless said articles are located so as to be in a position of storage as opposed to active use.

AUTHORITY NOTE: Promulgated in accordance with R.S. 40:1651(B).

HISTORICAL NOTE: Promulgated by the Department of Public Safety, Office of Fire Protection, LR 4:388 (October 1978), repromulgated LR 6:75 (February 1980), amended by the Department of Public Safety and Corrections, Office of State Fire Marshal, LR 23:1699 (December 1997).

§1509. Shopping Centers Fire Lanes

A. Fire lanes shall be provided for all buildings that are set back more than 150 feet (45.75 meters) from a public road or exceed 30 feet (9.14 meters) in height and are set back over 50 feet (15.25 meters) from a public road in accordance with NFPA 1:3-5 (1992 Edition).

B. It shall be the responsibility of the owners and operators of shopping centers and similar facilities to pay for and erect suitable signs notifying everyone that there shall be no parking within the specified area by order of the state fire marshal.

C. The fire marshal, his certified local authorities, or local law enforcement officials shall remove any vehicle parked in any fire lane in the state of Louisiana by any means necessary and shall assess the cost of removal against the owner of said vehicle by storing said vehicle and refusing to release said vehicle until all costs incident to the removal and storage of said vehicle have been paid by the owner.

D. Owners and occupants of the property on which fire lanes are located are hereby charged with the responsibility of notifying the fire marshal, his certified local authorities, or local law enforcement officials of the existence of any vehicles parked in those fire lanes; and in the event that they are unable to contact the fire marshal, his certified local authorities, or local law officials, the owner and occupant are hereby charged with the responsibility of and are hereby authorized to remove any vehicle parked in those fire lanes by any means necessary and to assess the cost of same against the owner of said vehicle by storing said vehicle and refusing to release said vehicle until all costs incident to the removal and storage of said vehicle have been paid by owner.

AUTHORITY NOTE: Promulgated in accordance with R.S. 40:1651(B).

HISTORICAL NOTE: Promulgated by the Department of Public Safety, Office of Fire Protection, LR 1:144 (February 1975), repromulgated 6:74 (February 1980), amended LR 6:659 (November 1980), amended by the Department of Public Safety and Corrections, Office of State Fire Marshal, LR 23:1699 (December 1997).

Chapter 17. Detention and Correctional Occupancies

§1701. Inspection of Detention and Correctional Occupancies

A. All detention and correctional occupancies in the state of Louisiana shall be inspected by the Office of State Fire Marshal at least annually.

B. The term "detention and correctional occupancies" shall include, but shall not be limited to, detention centers, prisons, jails, penal institutions, and other facilities meeting the definition of a detention and correctional occupancy as defined by the *NFPA 101 Life Safety Code*.

C. Detention and correctional occupancies constructed on or after September 1, 1981 shall comply with the applicable provisions of the National Fire Protection Association's *Life Safety Code* (NFPA 101) for existing detention and correctional occupancies, and with the applicable provisions of the National Fire Protection Association's *Fire Code* (NFPA 1), the latest adopted editions.

D. Detention and correctional occupancies constructed prior to September 1, 1981 shall comply with the applicable provisions of the National Fire Protection Association's *Life Safety Code* (NFPA 101) for existing detention and correctional occupancies, and with the applicable provisions of the National Fire Protection Association's *Fire Code* (NFPA 1), the latest adopted editions, excluding the provisions that address the following:

1. multiple occupancies;
2. standpipe and hose systems;
3. subdivision of building spaces.

E. The minimum aisle spacing between beds in all detention and correctional occupancies shall not be less than 28 inches.

AUTHORITY NOTE: Promulgated in accordance with R.S. 40:1651(B) and R.S. 40:1563(B)(4).

HISTORICAL NOTE: Promulgated by the Department of Public Safety, Office of Fire Protection, LR 4:388 (October 1978), repromulgated LR 6:75 (February 1980), amended by the Office of State Fire Marshal, LR 7:12 (January 1981), LR 8:485 (September 1982), amended by the Department of Public Safety and Corrections, Office of State Fire Marshal, LR 23:1699 (December 1997), LR 42:279 (February 2016).

Chapter 19. Fireworks

§1901. Fireworks/Public Display

A. Pursuant to R.S. 51:655, any person, firm or corporation, or other legal entity desiring a permit for a public display may apply to either the Office of State Fire Marshal, 8181 Independence Blvd., Baton Rouge, LA 70806, or to any certified local authority, which application shall contain the following information and shall be signed by the applicant attesting that the information is accurate:

1. the date, time and place of the public display including the length of time;

2. a site plan detailing the information regarding the discharge and fallout areas as it relates to the proximity of the public and all fire prevention plans and provisions which will be present and in force and available to assure the public safety at the public display;

3. a copy of the license by the Office of State Fire Marshal licensing the manufacturer, importer, distributor, jobber, or retailer who will be supplying and/or conducting the public display to assure the state fire marshal or his certified local authority that the fireworks and the actual presentation and conduct of the public display will not endanger the public safety.

AUTHORITY NOTE: Promulgated in accordance with R.S. 40:1563(F) and R.S. 51:650 et seq.

HISTORICAL NOTE: Promulgated by the Department of Public Safety, the Office of State Fire Marshal, LR 7:642 (December 1981), amended by the Department of Public Safety and Corrections, Office of State Fire Marshal, LR 23:1699 (December 1997), LR 45:1605 (November 2019).

§1902. Class C Pyrotechnic Operator Training and Certification Requirements

A. The purpose of this section is to establish the pre-license training and certification requirements for Class C Pyrotechnic Operators. The state fire marshal shall establish a training program for the licensure of Class C Pyrotechnic Operators. A license may be granted upon demonstration that the applicant has a satisfactory understanding of the handling and use of Class C fireworks, equipment used for Class C public displays, and the operations of the display as defined herein.

B. Applicants for Class C Pyrotechnic operator licenses are required to meet the certification requirements pursuant to R.S. 51:655, et seq., and these rules. Upon completion of the pre-license training, an applicant is eligible to take the required examination. An applicant for a Class C Pyrotechnic Operator license shall pass an examination prescribed and administered by the Office of State Fire Marshal. Correctly answering 70 percent or more of the questions will be considered a passing score. If the applicant fails on the first attempt, he is eligible to immediately take the examination a second time. If, however, a passing score is not achieved on the second attempt the applicant may only attempt the examination once every 30 calendar days.

AUTHORITY NOTE: Promulgated in accordance with R.S. 40:1563(F) and R.S.51:650 et seq.

HISTORICAL NOTE: Promulgated by the Department of Public Safety and Corrections, Office of State Fire Marshal, LR 45:1605 (November 2019).

§1903. Licenses

A. Anyone applying for licenses under R.S. 51:656 shall set forth not only such information as may be required by the application attached hereto and made part hereof but all such information as shall be necessary for the fire marshal to determine that the manufacturing, importation, distribution and sale of the fireworks in question will not endanger the public safety; such facts shall include but are not limited to business history, including length of time in business; proof of taxes paid; representative clients; references from public officials in fire safety; educational background of employees; and any and all other types of information which would assure the fire marshal or his certified authority that the public display will not endanger the public safety. All of the information both on the form and any additional information must be sworn and subscribed before a duly licensed and qualified notary public.

AUTHORITY NOTE: Promulgated in accordance with R.S. 40:1651(B).

HISTORICAL NOTE: Promulgated by the Department of Public Safety, Office of State Fire Marshal, LR 7:642 (December 1981), amended by the Department of Public Safety and Corrections, Office of State Fire Marshal, LR 23:1700 (December 1997).

§1904. Adoption of NFPA Standard 1123, *Code for Fireworks Display*

A. For the purpose of establishing the criteria for a Class C Public Display and the associated Class C Public Display Operator license, the state fire marshal adopts the following sections of the 2018 edition of NFPA 1123, *Code for Fireworks Display*:

1. NFPA 1123, Chapter 3, Definitions;

2. NFPA 1123, Chapter 4, Requirements for Display Fireworks Aerial Shells and Equipment;

3. NFPA 1123, Chapter 5, Display Site Selection;

4. NFPA 1123, Chapter 8, Operation of the Display;

5. NFPA 1123, Chapter 10, Qualifications (10.1.2 excepted); and

6. NFPA 1123, Annex D.3, Requirements for Consumer Fireworks, Novelties, and Theatrical Pyrotechnics.

B. All Class C Pyrotechnic Operators shall maintain a copy of the currently adopted edition of NFPA 1123 at all Class C public displays.

AUTHORITY NOTE: Promulgated in accordance with R.S. 40:1563(F) and R.S. 51:650 et seq.

HISTORICAL NOTE: Promulgated by the Department of Public Safety and Corrections, Office of State Fire Marshal, LR 45:1606 (November 2019).

§1905. Retail Fireworks Sales

A. In addition to the requirements of Louisiana Revised Statutes including but not limited to Louisiana Revised Statutes 51:650, et seq., and more specifically sections 653 and 654, as well as Louisiana Revised Statutes 40:1563, et seq., and more specifically sections 1578.6 and1605, licensed retail sellers of fireworks are required to comply with the following requirements.

1. There shall be no open flame heating devices in any location from which the sale of fireworks is made at retail.

2. There shall be no sleeping within the facility in which fireworks are sold, offered for sale or stored.

3. In any place where retail fireworks sales are made or offered or retail fireworks are stored there shall be a minimum of one unobstructed exit.

4. The physical facility, such as a fireworks stand, retail fast food outlet or any other similar facility out of which fireworks are sold, offered for sale or stored shall not be located less than 75 feet from any facility or mechanism in which flammable liquids are dispensed and/or stored above ground. Additionally, no fireworks shall be exploded within 75 feet from any facility or mechanism where flammable liquids are dispensed and/or stored above ground.

5. In any retail outlet except those which sell only fireworks, no fireworks shall be stored, displayed, or offered for sale within 10 feet of any required exit unless the fireworks are stored or contained within a container which will resist fire from any outside source.

6. No facility for the retail sale or storage of fireworks shall be located less than 25 feet from a public roadway.

7. All of the wiring in any facility for the retail sale or storage of fireworks shall be in accordance with the National Electric Code.

8. Any facility for the retail sale or storage of fireworks shall have available one serviceable fire extinguisher in accordance with NFPA 10 and L.A.C. 55:V:3001, et seq.

9. In accordance with LAC 55:V:3015.A, all portable fire extinguishers maintained on the premises of any retail location, storage facility, or public display site shall be inspected annually by a contractor who holds a current and valid license from the Office of State Fire Marshal.

AUTHORITY NOTE: Promulgated in accordance with R.S. 40:1563(F) and R.S. 51:650 et seq.

HISTORICAL NOTE: Promulgated by the Department of Public Safety, Office of State Fire Marshal, LR 9:691 (October 1983), amended LR 45:1606 (November 2019).

Chapter 21. Flammable and Combustible Liquids

§2101. Unattended Flammable Liquid Dispensing Systems

A. Unattended flammable liquid dispensing systems shall comply with the requirements of NFPA 30 and 30A, published by the National Fire Protection Association.

AUTHORITY NOTE: Promulgated in accordance with R.S. 40:1651(B).

HISTORICAL NOTE: Promulgated by the Department of Public Safety, Office of Fire Protection, LR 3:498 (December 1977), repromulgated LR 6:75 (February 1980), amended by the Office of State Fire Marshal, LR 8:523 (October 1982), amended by the Department of Public Safety and Corrections, Office of State Fire Marshal, LR 23:1700 (December 1997).

§2103. Specification for Flammable and Combustible Liquid Containers

A. All flammable liquid (Class I) containers shall meet the requirements of NFPA 30 and/or 30A except as otherwise provided herein.

B. Nonreusable polyethylene containers made of DOT Type III plastic, treated, if necessary, to prevent permeation; having a minimum overall thickness of 0.010 inches; a rated capacity not over 2.5 gallons; a 15 percent maximum outage over mark capacity meeting the closure and testing requirements of, and containing combustible products authorized by DOT Specification 2U, shall be acceptable for Class II and Class III fuels.

C. All containers must be labeled to verify ANSI-ASTM D 3435-78 for Class I liquids and DOT Specification 2U for Class II and Class III liquids.

AUTHORITY NOTE: Promulgated in accordance with R.S. 40:1651(B).

HISTORICAL NOTE: Promulgated by the Department of Public Safety, Office of State Fire Marshal, LR 9:691 (October 1983), amended by the Department of Public Safety and Corrections, Office of State Fire Marshal, LR 23:1700 (December 1997).

Chapter 23. Boards within the Office of State Fire Marshal

§2301. Fire Marshal Board of Review

A. Any application to the board of review shall contain the following basic information set off in organized fashion with captions indicating that the paragraph in question contains the following basic information:

1. the name of the applicant;

2. a brief description of the facts;

3. a copy of the order of the fire marshal which is being appealed;

4. a reference to the section of the law or code being reviewed;

5. a brief description of why the applicant feels the requirements of the fire marshal are not within the fire marshal's authority, or brief description of why the interpretation of the fire marshal is incorrect, or what specific relief is required by the applicant;

6. a list of the individuals who will be appearing before the board and a brief description of the testimony or information they will be providing to the board;

7. a list of all documents which will be introduced or provided to the board along with a brief description of the documents, and, if possible, a copy of said documents;

8. a list of each exhibit except for documents, and a brief description of each exhibit;

9. written proof of authority signed by the owner if the applicant is not the owner.

B. Whenever possible, a copy of the meeting notice including the date, time and place, and agenda of the meeting of the board will be published in the official notices of the official state journal; furthermore, whenever possible, a press release containing the same information will be mailed to the official journals of the cities of Shreveport, Monroe, Lafayette, Lake Charles, Alexandria, New Orleans,

and Baton Rouge and any city or town in which the meeting of the board is to be held if it is not one of the aforementioned major cities; and the same information shall be mailed to each individual who has notified the fire marshal of his desire to receive a notice of such appeal.

C. A copy of the determination of the board, as prepared by the chairman, will be mailed to each individual who requests a copy of that specific determination as well as to the applicant.

D. The time delays for filing an appeal shall be those specified in R.S. 40:1577 and 40:1578.1(D).

AUTHORITY NOTE: Promulgated in accordance with R.S. 40:1651(B).
HISTORICAL NOTE: Promulgated by the Department of Public Safety, Office of Fire Protection, LR 4:257 (July 1978), amended LR 6:517 (August 1980), amended by the Department of Public Safety and Corrections, Office of State Fire Marshal, LR 23:1700 (December 1997).

§2303. Fire Marshal Mobile Home Board of Review

A. Any application to the Board of Review shall contain the following basic information set off in organized fashion with captions indicating that the paragraph in question contains the following basic information:

1. the name of the applicant;

2. a brief description of the facts;

3. a copy of the order of the fire marshal which is being appealed;

4. a reference to the section of the law or code being reviewed;

5. a brief description of why the applicant feels the requirements of the fire marshal is not within the fire marshal's authority, or a brief description of why the interpretation of the fire marshal is incorrect, or what specific relief is requested by the applicant;

6. a list of the individuals who will be appearing before the board, and a brief description of the testimony or information they will be providing to the board;

7. a list of all the documents which will be introduced or provided to the board along with a brief description of the documents, and if possible, a copy of said documents;

8. a list of each exhibit except for documents, and a brief description of the exhibit.

B. Whenever possible a notice of the meeting date and place, and the agenda will be recorded in the *Louisiana Register*, however, whenever that is not possible, a copy of the meeting notice including the date, time and place, and agenda of the meeting of the board will be published in the official notices of the official state journal; furthermore, a press release containing the same information will be mailed to the official journals of the cities of Shreveport, Monroe, Lafayette, Lake Charles, Alexandria, New Orleans, and Baton Rouge, and any city or town in which the meeting of the board is to be held if it is not one of the aforementioned major cities; and the same information shall be mailed to each individual who has notified the fire marshal of his desire to receive a notice of such appeal.

C. A copy of the determination of the board as prepared by the chairman will be mailed to each individual who requests a copy of that specific determination as well as to the applicant.

AUTHORITY NOTE: Promulgated in accordance with R.S. 40:1563.
HISTORICAL NOTE: Promulgated by the Department of Public Safety, Office of State Fire Marshal, LR 9:15 (January 1983).

§2305. Firemen's State Supplemental Pay Board

A. Whenever possible, a notice of any meeting of the Louisiana State Firemen's Supplemental Pay Board will be published in the official notices of the official state journal; furthermore, a press release containing the same information will be mailed to the official journals of the cities of Shreveport, Monroe, Lafayette, Lake Charles, Alexandria, New Orleans, and Baton Rouge, and any other city or town in which the meeting of the board is to be held if it is not in one of the aforementioned major cities; and the same information shall also be mailed to each individual who has notified the fire marshal of his desire to receive a notice of a meeting.

AUTHORITY NOTE: Promulgated in accordance with R.S. 33:2006.
HISTORICAL NOTE: Promulgated by the Department of Public Safety, Office of Fire Protection, LR 6:517 (August 1980).

Chapter 25. Amusement Attractions and Rides

§2501. Purpose

A. The purpose of these rules is to regulate the activity of firms, employees of firms, and individuals who own, operate, set-up, and/or inspect inflatable amusement devices, amusement attractions, or amusement rides in the interest of protecting and preserving human lives pursuant to the authority of R.S. 40:1484.1 et seq.

AUTHORITY NOTE: Promulgated in accordance with R.S. 40:1484.2(B).
HISTORICAL NOTE: Promulgated by the Department of Public Safety and Corrections, Office of State Fire Marshal, LR 44:1254 (July 2018).

§2503. Administration

A. The Office of State Fire Marshal, which administers the provisions of R.S. 40:1484.1 et seq., relating to the amusement rides safety law, is located at 8181 Independence Blvd., Baton Rouge, LA 70806.

B. The following nationally recognized standards are to be used in the formulation and enforcement of these rules and regulations. Should there arise a conflict between these standards and R.S. 40:1484.1 et seq., or the rules and regulations, the provisions of R.S. 40:1484.1 et seq., and/or these rules shall apply:

1. ASTM F2374-10, *Standard Practice for Design, Manufacture, Operation, and Maintenance of Inflatable*

Amusement Devices; (approved Feb. 1, 2010; published March 2010);

2. ASTM F1159-15b, *Standard Practice for Design of Amusement Rides and Devices that are Outside the Purview of Other F24 Design Standards*; (approved Nov. 1, 2015; published November 2015);

3. ASTM F1193-16, *Standard Practice for Quality, Manufacture, and Construction of Amusement Rides and Devices*; (approved Feb. 15, 2016; published March 2016);

4. ASTM F2959-16, *Standard Practice for Aerial Adventure Courses*; (approved May 1, 2016; published May 2016);

5. ASTM F2970-15, *Standard Practice for Design, Manufacture, Installation, Operation, Maintenance, Inspection and Major Modification of Trampoline Courts*; (approved Feb. 15, 2015; published April 2015);

6. ASTM F2291-15, *Standard Practice for Design of Amusement Rides and Devices*; (approved Aug. 1, 2015; published October 2015);

7. ASTM F2375-09, *Standard Practice for Design, Manufacture, Installation and Testing of Climbing Nets and Netting/Mesh used in Amusement Rides, Devices, Play Areas and Attractions*; (approved March 1, 2009; published April 2009);

8. ASTM F2974-15, *Standard Guide for Auditing Amusement Rides and Devices*; (edition approved Sept. 1, 2015; published December 2015);

9. ASTM F3099-14, *Standard Practices for Parasailing*; (edition approved Sept. 1, 2014; published September 2014);

10. ASTM F770-15, *Standard Practice for Ownership, Operation, Maintenance, and Inspection of Amusement Rides and Devices*; (edition approved May 1, 2015; published May 2015);

11. ASTM F2007-12, *Standard Practice for Design, Manufacture, and Operation of Concession Go-Karts and Facilities*; (approved March 1, 2012; published March 2012);

12. ASTM F2460-11, *Standard Practice for Special Requirements for Bumper Boats*; (edition approved March 1, 2011; published April 2011);

13. ASTM F2960-16, *Standard Practice for Permanent Amusement Railway Ride Tracks and Related Devices*; (edition approved Nov. 1, 2016; published November 2016);

14. ASTM F3054-15, *Standard Practice for Operations of Amusement Railway Rides, Devices, and Facilities*; (edition approved Dec. 1, 2015; published January 2016);

15. ASTM F747-15, *Standard Terminology Relating to Amusement Rides and Devices*; (edition approved Oct. 1, 2015; published November 2015);

16. ASTM F1957-99 (Reapproved 2011), *Standard Test Method for Composite Foam Hardness-Durometer Hardness*; (edition approved Jan. 15, 2011; published June 2011);

17. ASTM F2137-16, *Standard Practice for Measuring the Dynamic Characteristics of Amusement Rides and Devices*; (edition approved Oct. 15, 2016; published November 2016);

18. ASTM F2376-13, *Standard Practice for Classification, Design, Manufacture, Construction, and Operation of Water Slide Systems*; (edition approved June 1, 2013; published May 2014);

19. ASTM F2461-09, *Standard Practice for Manufacture, Construction, Operation, and Maintenance of Aquatic Play Equipment*; (edition approved March 15, 2009; published May 2009);

20. ASTM F1957-99 (Reapproved 2011), *Standard Test Method for Composite Foam Hardness-Durometer Hardness;* (edition approved Jan. 15, 2011; Published June 2011);

21. NFPA 101 (2015 edition), *Life Safety Code*; and

22. NFPA 70 (2014 edition), *National Electrical Code*.

AUTHORITY NOTE: Promulgated in accordance with R.S. 40:1484.2(B).

HISTORICAL NOTE: Promulgated by the Department of Public Safety and Corrections, Office of State Fire Marshal, LR 44:1254 (July 2018).

§2505. Applicability of Rules

A. These rules shall apply to all firms and persons engaged in the activity of owning, operating, setting up of, and/or inspecting inflatable amusement devices, amusement attractions, or amusement rides.

AUTHORITY NOTE: Promulgated in accordance with R.S. 40:1484.2(B).

HISTORICAL NOTE: Promulgated by the Department of Public Safety and Corrections, Office of State Fire Marshal, LR 44:1255 (July 2018).

§2507. Notices of Violations and Penalties; Cease and Desist Orders

A. Any notice required to be given by the state fire marshal or his designee to any firm, owner, or operator found to have violated the provisions of R.S. 40:1484 et seq., or these rules shall include any proposed penalty and may be provided in the following manner:

1. by personal service, to include hand delivery to the firm, owner, operator, employee, or individual;

2. by domiciliary service, to include hand delivery to a person of suitable age and discretion who resides with the owner, operator, employee, or individual;

3. when mailed, postage prepaid, to the subject person's residence or entity address as it appears in the records in the Office of State Fire Marshal;

4. by electronic transmission or electronic mail (email) if the electronic transmission or email is retrievable in a perceivable form and the Office of State Fire Marshal and the recipient have consented in writing to the use of such

form of electronic transmission or email for purposes of notice or communication between the parties; or

5. on the seventh calendar day after it is mailed with correct postage to the most recent address of the firm, owner, operator, employee, or individual furnished in writing or electronically to the Office of State Fire Marshal.

B. It is the responsibility of the person or entity involved to ensure that the office has a correct email address or electronic notification information for the person or firm. It is the responsibility of the person or entity involved to ensure that the office has a correct address for the person or firm.

C. Any cease and desist order issued by the Office of State Fire Marshal in accordance to R.S. 40:1484.1 et seq., or these rules must be given in the following manners:

1. personal service; or

2. mail, certified return receipt.

AUTHORITY NOTE: Promulgated in accordance with R.S. 40:1484.2(B).

HISTORICAL NOTE: Promulgated by the Department of Public Safety and Corrections, Office of State Fire Marshal, LR 44:1255 (July 2018).

§2509. Definitions

A. As used in this Part, the following terms have the meanings specified in this Section, except where the context expressly indicates otherwise.

AIMS—the Amusement Industry Manufacturers and Suppliers association.

ANSI—the American National Standards Institute.

ASTM—the American Society of the International Association for Testing and Materials.

Certificate of Licensure—that document issued by the Office of State Fire Marshal to a firm or individual authorizing it or him to engage in such activities as defined in R.S. 40:1484.1 et seq., and these rules.

Employee—a person who works for a "firm" as defined by R.S. 40:1484.1 et seq., in return for financial or other compensation.

a. For the purposes of the licensing requirements, contained in R.S. 40:1484.1 et seq., employees shall not include secretaries, drivers, accounting, or other administrative personnel.

b. For the purposes of licensing requirements, the firm owner or owners shall be considered an "employee" if he or she is or will be inspecting or operating an inflatable amusement device, amusement attraction, or amusement ride.

Endorsement—a category of license authorizing its holder to operate, and/or perform inspections of inflatable amusement devices, amusement attractions, or amusement rides.

Event Foreman—that employee at least 18 years of age or older designated by an inflatable amusement device, amusement attraction, or amusement ride operating firm as the person responsible for amusement event operations. A foreman is not required to be licensed, but the employing firm shall provide to the Office of State Fire Marshal the name and contact information of at least one foreman for each event. The foreman shall also be knowledgeable of the required notification procedures involving reportable accidents at an event.

Event Tag—a tag that is affixed to inflatable amusement devices, amusement attractions, or amusement rides designating the duration of an individual event. The color of the tag determines whether the ride is approved for use or identifies impairments.

Go-Kart Track—a fixed course, either open to the public or operated on a private or semi-public basis, whether or not operated for profit, wherein the use of go-karts (karts) for rides, rentals, demonstrations, and/or testing is the principal use of such business. It does not include tracks or courses solely operated for competitive racing, time trials, or similar activities reasonably connected therewith.

Limited Third-Party Specialty Inspector Endorsement—that document issued by the Office of State Fire Marshal authorizing its holder to test and inspect only inflatable amusement devices.

Major Modification—any change in the structural or operational characteristics of the inflatable amusement device, amusement attraction, or amusement ride which may alter the safety or performance characteristics from that specified in the original design criteria of the manufacturer.

Material and/or Structural Testing—the nondestructive testing of inflatable amusement devices, amusement attractions, or amusement rides, conducted by licensed third-party inspectors at least annually for safety in accordance with ASTM-F-24 and other applicable standards, regulations, manuals, service bulletins, and notices. This differs from the set-up and functional status of inflatable amusement devices, amusement attractions, or amusement rides at an individual event.

Minor Modification—a change that does not affect the original manufacturer safety or performance characteristics or criteria of an inflatable amusement device, amusement attraction, or amusement ride. Examples of minor modifications are changes in signage or the thematic references of an inflatable amusement device, amusement attraction, or amusement ride.

NAARSO—the National Association of Amusement Ride Safety Officials.

NFPA—the National Fire Protection Association.

OSFM-IMS—the Office of State Fire Marshal information management system.

Operator—a person who possesses the appropriate training or experience enabling an inflatable amusement device, amusement attraction, or amusement ride firm to obtain an operator firm license. An operator shall be a paid employee of the firm and shall be actively engaged in the direct supervision of operations of the licensed firm and its

employees. Every operating firm shall employ and license at least one operator.

Office—the Office of State Fire Marshal.

Operator Endorsement—that document issued by the Office of State Fire Marshal authorizing its holder to manage, coordinate, or possess the duty to control the operation of the inflatable amusements devices, amusement attractions, or amusement rides at an event.

Reidentification—the creation by an operator or owner of a new name, number, or both of an inflatable amusement device, amusement attraction, or amusement ride that has been the subject of a major modification.

Reinspection—an inspection conducted by a licensed inspector subsequent to an initial inspection during which deficiencies were identified. The purpose of a reinspection is to ensure corrective measures have been taken that will result in bringing the inflatable amusement device, amusement attraction, or amusement ride into compliance with R.S. 40:1484.1 et seq., manufacturer specifications, and these rules.

Set-Up Inspector Endorsement—that document issued by the Office of State Fire Marshal authorizing its holder to conduct the set-up inspection prior to the opening of an amusement attraction or prior to the operation of an inflatable amusement device or amusement ride at each event in accordance with R.S. 40:1484.1 et seq., and these rules.

Third-Party Inspector Endorsement—that document issued by the Office of State Fire Marshal authorizing its holder to test and inspect inflatable amusement devices, amusement attractions, and amusement rides in accordance with R.S. 40:1484.1 et seq., and these rules.

AUTHORITY NOTE: Promulgated in accordance with R.S. 40:1484.2(B).

HISTORICAL NOTE: Promulgated by the Department of Public Safety and Corrections, Office of State Fire Marshal, LR 44:1255 (July 2018).

§2511. Registration of Inflatable Amusement Devices, Amusement Attractions, Amusement Rides; Registration Requirements

A. Required

1. Any owner of an inflatable amusement device, amusement attraction, or amusement ride shall register each of his inflatable amusement devices, amusement attractions, or amusement rides with the Office of State Fire Marshal in accordance with these rules prior to its use in this state.

B. Registration Requirements

1. To register the inflatable amusement device, amusement attraction, or amusement ride being used in this state, the owner shall electronically submit the following information utilizing the Office of State Fire Marshal information management system (OSFM-IMS) or in writing on the forms provided by the Office of State Fire Marshal and accompanied by the required fee as specified in R.S. 40:1484.18 et seq., and these rules:

a. a registration application;

b. a certificate of inspection dated no earlier than 60 days prior to the date of submission of a registration application; and

c. a copy of the general liability insurance policy in which all inflatable amusement devices, amusement attractions, and amusement rides being registered are listed on the submitted insurance declaration page.

AUTHORITY NOTE: Promulgated in accordance with R.S. 40:1484.2(B).

HISTORICAL NOTE: Promulgated by the Department of Public Safety and Corrections, Office of State Fire Marshal, LR 44:1256 (July 2018).

§2513. Certificate of Registration; Registration Plates; Placement; Annual Decals; Replacement Fees

A. Certificate of Registration

1. Upon approval of the firm or individual to be licensed by the Office of State Fire Marshal, a certificate of registration shall be issued to the owner of each inflatable amusement device, amusement attraction, or amusement ride registered. The certificate or a copy thereof shall be kept where it is accessible upon demand by the state fire marshal or his representative.

B. Registration Plates

1. Once an inflatable amusement device, amusement attraction, or amusement ride is registered, a registration plate shall be issued bearing a permanent registration number. The plate is to be permanently affixed to the amusement attraction or amusement ride in a conspicuous location.

2. To prevent damage to inflatable devices, owners and operators shall be allowed to temporarily affix the plate to or near the inflating mechanism or to a grommet at or near the inflating mechanism for the duration of each event where the device is in use. It shall be the responsibility of the owner and operator to ensure that the correct plate is affixed to the registered inflatable device.

C. Annual Decals

1. Annual Registration Renewal. After renewing the annual registration of an inflatable amusement device, amusement attraction, or amusement ride, a decal signifying the month and year of the annual renewal shall be issued by the Office of State Fire Marshal.

2. The registration decal shall be affixed to the front, bottom-right corner of the registration plate.

AUTHORITY NOTE: Promulgated in accordance with R.S. 40:1484.2(B).

HISTORICAL NOTE: Promulgated by the Department of Public Safety and Corrections, Office of State Fire Marshal, LR 44:1256 (July 2018).

§2515. License Required; Firm Applicability; Individual Applicability; Types of Endorsement

A. Each firm engaged in the activity of operating, and/or inspecting inflatable amusement devices, amusement

attractions, or amusement rides shall obtain a certificate of licensure from the Office of State Fire Marshal, as provided by R.S. 40:1481.1 et seq., and these rules prior to conducting any such activity in this state.

B. Firm License Applicability

1. The following shall apply to firms.

a. Changes of Ownership. The change of a firm's majority ownership invalidates the current license. To ensure continuance of the firm's ability to operate and/or inspect inflatable amusement devices, amusement attractions, or amusement rides in the state, an application for a new certificate shall be submitted to the Office of State Fire Marshal within 10 days after any change in ownership.

b. Change of Firm Officers. Any change in corporate officers of an incorporated firm or members and/or managers of a limited liability corporation or similar entities within the licensure period, must be reported in writing to the Office of State Fire Marshal within 10 days of the change.

c. Changes in Firm Address. The firm shall give written or electronic notification to the Office of State Fire Marshal of the physical location of their principal place of business. If, after notification, the location of their principal place of business changes, the firm shall notify the Office of State Fire Marshal within 10 days of the change.

d. Duplicates. A duplicate certificate of licensure must be obtained from the Office of State Fire Marshal to replace a lost or destroyed certificate. The firm must submit written or electronic notification of the loss or destruction within 10 days, accompanied by the required fee pursuant to R.S. 40:1484.1 et seq.

e. Revisions/Changes to License. The change of a firm's name, location, or mailing address or operating status requires a revision of the certificate of registration. Licenses requiring changes must be surrendered to the Office of State Fire Marshal within 10 days after the change requiring the revision. The firm must submit written or electronic notification of the change with the surrendered license, accompanied by the required fee specified in by R.S. 40:1484.1 et seq.

f. Non-Transferability. A certificate of licensure is not transferable from one firm to another.

g. Validity. A certificate of licensure is valid for one year from date of issue, and must be renewed annually.

C. Each person or employee engaged in the activity of operating and/or inspecting inflatable amusement devices, amusement attractions, or amusement rides shall obtain a license from the Office of State Fire Marshal, as provided by R.S. 40:1484.1 et seq., and these rules prior to conducting any such activity in this state. This does not apply to ride operators as defined in R.S. 40:1484.3.

D. Applications for individual licenses shall be deemed as an acknowledgement from the employer certifying the applicant's competency to perform inspections of inflatable amusement devices, amusement attractions, and amusement rides authorized by the endorsements applied for and that the individual is an employee who receives a W-2 or K-1 tax form from the firm.

E. Individual License Applicability

1. The following shall apply to individual persons.

a. Changes in Licensed Individual's Address. An individual licensed with the Office of State Fire Marshal to inspect inflatable amusement devices, amusement attractions, or amusement rides shall give written or electronic notification to the Office of State Fire Marshal of his home address. If, after notification, the location of their principal place of business changes, the individual responsible shall immediately notify the Office of State Fire Marshal of the change.

b. Pocket Licenses issued by the Office of State Fire Marshal are for immediate identification purposes and shall be kept on the recipient's person at all times when conducting regulated activity. The pocket license need not be visibly displayed when working in areas where the license may be damaged or lost. The license must still be available for inspection upon request. The license shall bear the name of firm that employs the person.

c. Duplicate Licenses. A duplicate license must be obtained from the Office of State Fire Marshal to replace a lost or destroyed license. The license holder or his employer must submit written or electronic notification within 10 days of the loss or destruction of a license, accompanied by the required fee as specified in R.S. 40:1484.18(H).

d. Revised Licenses. The change of a licensee's employer, home or mailing address, or employment status requires a revised license. Licenses requiring revision must be surrendered to the Office of State Fire Marshal within 10 days after the change. The license holder or his employer must submit written or electronic notification of the necessary change with the surrendered license, accompanied by the required fee as specified in R.S. 40:1484.18(H).

e. Non-Transferable. A license is not transferable from one person to another.

f. Validity. A license is valid for one year from date of issue, and must be renewed annually.

g. Transfer of Employer. When a currently licensed employee transfers to a new employer, a revised license shall be required indicating the new firm's information. Upon receipt of the revision application by the Office of State Fire Marshal, the individual may go to work for the new employer while waiting for the processing of the license. This go-to-work allowance shall not authorize the employee to engage in any activity for which he/she was not previously licensed to perform or for which the firm is not currently licensed to perform.

h. Age Limitations. For the purpose of licensing, no one under the age of 21 shall be eligible for a license.

F. Types of Endorsement

1. Each license shall be identified by endorsement, which indicates the authorized act or acts which may be performed by the licensee. The endorsements are as follows:

a. operator endorsement (firm; individual);

b. third-party inspector endorsement (firm; individual);

c. limited third-party specialty inspector endorsement (firm; individual);

d. set-up inspector endorsement (firm; individual).

G. Any firm and/or person described in this Section, which or who has not applied for and received a current and valid license, shall immediately cease and desist such activities. The Office of State Fire Marshal shall take all steps necessary to enforce an order to cease and desist.

AUTHORITY NOTE: Promulgated in accordance with R.S. 40:1484.2(B).

HISTORICAL NOTE: Promulgated by the Department of Public Safety and Corrections, Office of State Fire Marshal, LR 44:1257 (July 2018).

§2517. Application for Certificates of Licensure

A. Applications for a certificate of licensure for firms, employees of firms, and individuals who operate, and/or inspect inflatable amusement devices, amusement attractions, or amusement rides shall be submitted and processed electronically utilizing the Office of State Fire Marshal information management system (OSFM-IMS), or in writing on the forms provided by the State Fire Marshal and accompanied by the required fee as specified in these rules.

B. The application for certificates of licensure shall:

1. be executed by the sole proprietor, each partner of a partnership, member or manager, if a limited liability company, or by the authorized officer of the firm;

2. identify the type of license and endorsement applied for;

3. identify the physical and mailing address, if different, from the firm's operating location;

4. identify any and all names by which the firm may conduct activity regulated by R.S. 40:1484.1 et seq., and these rules. Only one trade or "doing business as" name shall be permitted per each certificate of licensure;

5. identify each principal, officer, and member of the firm;

6. identify the contact person and email address of such, as defined by these rules;

7. identify any and all past violations or pending administrative or legal action(s) against the firm in other state or local jurisdictions;

8. include a separate employee application for each person along with the requisite training and/or certification(s), as established by these rules, an originally signed and notarized affidavit detailing the training and/or certification(s), and digital photographs of each applicant's unobscured face/head;

9. be accompanied by:

a. an original certificate of insurance showing the minimum of $1,000,000 coverage insuring the operator against liability for injury suffered by persons riding the amusement attraction or ride; or

b. a bond in a like amount, provided the aggregate liability of the surety under any such bond shall not exceed the face amount thereof; and

c. an original certificate of insurance documenting that the firm has a current and valid worker's compensation insurance policy as required by state law.

C. Errors and Omissions Coverage. In compliance with R.S. 40:1484.16(5), the state fire marshal has suspended the requirement to obtain errors and omissions coverage by those firms and individuals who engage in the inspections of inflatable amusement devices, amusement attractions, or amusement rides.

AUTHORITY NOTE: Promulgated in accordance with R.S. 40:1484.2(B).

HISTORICAL NOTE: Promulgated by the Department of Public Safety and Corrections, Office of State Fire Marshal, LR 44:1258 (July 2018).

§2519. Fees—General Information

A. Every fee required in accordance with the provisions of R.S. 40:1484.18 et seq., and these rules shall be paid in the following manners:

1. by firm check or certified funds made payable to the "Office of State Fire Marshal." Fees shall be paid at or mailed to the Office of State Fire Marshal, Attention Licensing Section, at 8181 Independence Blvd., Baton Rouge, LA 70806; or

2. by credit card when submitting an application(s) electronically using the Office of State Fire Marshal information management system (OSFM-IMS).

B. Late fees are required on all licenses which are not timely renewed as outlined in R.S. 40:1484.18 et seq.

C. A renewal application accompanied by the required renewal fee and deposited with the United States Postal Service is deemed to be timely filed, regardless of actual date of delivery, when its envelope bears a legible postmark date which is on or before the expiration date of the certificate or license being renewed.

D. Licenses which have been expired for more than 60 days will be suspended.

AUTHORITY NOTE: Promulgated in accordance with R.S. 40:1484.2(B).

HISTORICAL NOTE: Promulgated by the Department of Public Safety and Corrections, Office of State Fire Marshal, LR 44:1258 (July 2018).

§2521. Alteration of Certificates and Licenses

A. Any alteration of a certificate of licensure or individual license renders it invalid and such alteration shall

be the basis for administrative action in accordance with penalties set forth in R.S. 40:1484.1 et seq., and these rules.

AUTHORITY NOTE: Promulgated in accordance with R.S. 40:1484.2(B).

HISTORICAL NOTE: Promulgated by the Department of Public Safety and Corrections, Office of State Fire Marshal, LR 44:1258 (July 2018).

§2523. Event Tags; Required; Design and Color Significance; Impairment Notification Requirement and Procedure

A. Required

1. Every inflatable amusement device, amusement attraction, or amusement ride in operation in this state shall have an event tag placed thereon after it has been inspected by a licensed set-up inspector.

2. Event tags shall be valid only for the dates of the event's duration and shall be removed at the end of each event. The dates of the event shall be clearly indicated and written in indelible ink, or with a permanent marker.

3. In the event of an annual inspection, the licensed third party inspector shall only affix a red event (impairment) tag when the inflatable amusement device, amusement attraction, or amusement ride has been found to be not in compliance with all applicable adopted laws, rules, standards, and corresponding manufacturer's installation manuals, maintenance and service repair bulletins, or notices. The inspector shall detail on the reverse of the tag the deficiencies.

4. A red event tag shall have the same effect as a cease and desist order issued by the Office of State Fire Marshal.

B. Design and Color Significance

1. Event tags shall be constructed of a material able to withstand inclement weather or placed in a clear plastic sleeve that is able to withstand inclement weather.

2. The dimensions of the tag shall be 3 inches by 5 inches and shall contain the following information printed thereon:

a. "DO NOT REMOVE BY ORDER OF THE STATE FIRE MARSHAL" (all letters capitalized and in bold face type);

b. the operating firm's name, physical address, and telephone number;

c. the firm's Office of State Fire Marshal license number;

d. the printed name of the licensed inspector and his Office of State Fire Marshal license number;

e. the signature of the licensed inspector. (Pre-printed or stamped signatures are not permitted);

f. the name of the inflatable amusement device, amusement attraction, and/or amusement ride and its serial number; and

e. the dates of the event during which the inflatable amusement device, amusement attraction, or amusement ride will be in operation or not in operation if not approved for use.

3. For inflatable amusement devices, amusement attractions, and amusement rides that are approved for operation by a licensed inspector, the event tags shall be green in color.

4. For inflatable amusement devices, amusement attractions, and amusement rides that are not approved for operation by a licensed inspector, the event tags shall be red in color. A red event tag shall have the same effect as a cease and desist order issued by the Office of State Fire Marshal.

5. Where only individual units of a ride, such as cars, seats, or other carriers are defective and not in compliance with R.S. 40:1484.1 et seq., and/or these rules, such units shall be taken out of service and clearly marked with a yellow impairment tag reading "Out of Service;" provided, however, such defects do not jeopardize the safety of the entire ride.

6. The tags shall be conspicuously placed on or as close as possible to the operator controls of the amusement ride in a location that limits access to the tag by patrons. For inflatable devices, the tag shall be conspicuously placed at or near the inflating mechanism. For amusement attractions, the tag shall be conspicuously placed at or near the entrance to the attraction in a location that limits access to the tag by patrons.

C. Impairment Notification Requirement and Procedure

1. When a red event (impairment) tag is affixed to an inflatable amusement device, amusement attraction, or amusement ride, or to an individual unit of an inflatable amusement device, amusement attraction, or amusement ride after a set-up inspection has been conducted, the licensed inspector shall notify the Office of State Fire Marshal within two hours of affixation of the tag.

2. If, during an annual inspection, a licensed third party inspector finds that the inflatable amusement device, amusement attraction, or amusement ride does not comply with all applicable adopted laws, rules, standards, and its corresponding manufacturer's installation manuals, maintenance and service bulletins, and notices, the licensed third-party inspector shall notify the Office of State Fire Marshal within two hours of his findings. The third party inspector shall include in the notification a copy of his inspection report detailing his findings.

3. Notification of findings as listed in Paragraphs 1 and 2 of this Subsection shall be made by calling the Office of State Fire Marshal at 1-800-256-5452.

AUTHORITY NOTE: Promulgated in accordance with R.S. 40:1484.2(B).

HISTORICAL NOTE: Promulgated by the Department of Public Safety and Corrections, Office of State Fire Marshal, LR 44:1259 (July 2018).

§2525. Certificate of Inspection Form

A. Certificate of Inspection Form

1. A certificate of inspection form shall be provided by the Office of State Fire Marshal for use by licensed third-party and/or set-up inspectors.

AUTHORITY NOTE: Promulgated in accordance with R.S. 40:1484.2(B).

HISTORICAL NOTE: Promulgated by the Department of Public Safety and Corrections, Office of State Fire Marshal, LR 44:1259 (July 2018).

§2527. Prohibited Acts

A. The following acts are prohibited and shall be considered grounds for administrative and/or legal action to be taken against firms, persons and/or employees committing such:

1. charging a customer for an inspection that was not performed;

2. misrepresenting oneself and/or one's firm to a patron, the Office of State Fire Marshal or designated representative, or other public official;

3. impersonating the state fire marshal, his designated representative, or any other public official;

4. operating, certifying, testing, or inspecting an inflatable amusement device, amusement attraction, or amusement ride without a valid license obtained from the Office of State Fire Marshal;

5. certifying, testing, or inspecting an inflatable amusement device, amusement attraction, or amusement ride contrary to applicable manufacturer standards and/or specifications, or NAARSO, ASTM, or other standards adopted by the Office of State Fire Marshal;

6. falsifying an application or any other document submitted to obtain a license, or other documentation requested by or submitted to the Office of State Fire Marshal;

7. falsifying tags; inspection reports; device, attraction, or ride reports; or other relative documents;

8. operating an inflatable amusement device, amusement attraction, and/or amusement ride without it first being inspected and approved for use by a licensed inspector;

9. operating an inflatable amusement device, amusement attraction, and/or amusement ride prior to or without a set-up inspection being conducted by a licensed inspector;

10. operating an inflatable amusement device, amusement attraction, and/or amusement ride without it being registered with the Office of State Fire Marshal;

11. operating an inflatable amusement device, amusement attraction, and/or amusement ride with an expired license;

12. failing to notify the Office of State Fire Marshal of any changes that affect licensure;

13. failure to notify the Office of State Fire Marshal of an inflatable amusement device, amusement attraction, or amusement ride accident, or an accident resulting in an injury or fatality;

14. failing to abide by the tagging requirements of the Office of State Fire Marshal;

15. engaging in false, misleading, or deceptive practices;

16. aiding and abetting an unlicensed firm or individual in the operation, certifying, testing, or inspecting of an inflatable amusement device, amusement attraction, or amusement ride;

17. failure to adhere to all applicable laws and rules governing the owning, licensing, registering, inspection, and operation of inflatable amusement devices, amusement attractions, or amusement rides;

18. working an employee without the appropriate license endorsement; and

19. working without the proper license endorsement.

AUTHORITY NOTE: Promulgated in accordance with R.S. 40:1484.2(B).

HISTORICAL NOTE: Promulgated by the Department of Public Safety and Corrections, Office of State Fire Marshal, LR 44:1259 (July 2018).

§2529. Enforcement; Investigations

A. The state fire marshal or his designated representative shall make, or cause to be made, from time to time, inspections of a firm's physical locations or operational sites to verify required certificates, employee lists, employee licenses, business records and insurances, equipment, tools, compliance with applicable NFPA codes, standards, and manufacturer's manuals, and as circumstances dictate, to determine that firms and their employees are engaging in activity in accordance with the requirements of R.S. 40:1484.1 et seq., and these rules.

B. The state fire marshal shall investigate all complaints of alleged violations of R.S. 40:1484.1 et seq., and these rules. Complaints of alleged violations shall be made in writing to the Office of State Fire Marshal. The office shall make available a complaint form to be used as needed. Penalties shall be administered to those firms and/or employees found to have violated these laws and/or rules. Proposed administrative penalty letters shall act as official notification of alleged violations.

AUTHORITY NOTE: Promulgated in accordance with R.S. 40:1484.2(B).

HISTORICAL NOTE: Promulgated by the Department of Public Safety and Corrections, Office of State Fire Marshal, LR 44:1260 (July 2018).

§2531. Administrative Actions; Enhanced Fine Amounts; Fine Schedule

A. The Office of State Fire Marshal may refuse the issuance or renewal of, suspend, or revoke a license and impose administrative penalties, if, after notice, as required by the Administrative Procedures Act, it is found that a person, licensed firm, or licensee, or an applicant for licensure, failed to comply with the provisions of R.S. 40:1484.1, et seq., or these rules. The State Fire Marshal

may consider violations in other states or failing to pay outstanding fine amounts as grounds for refusing the issuance of or the renewing of a license. Additionally, where it is brought to the attention of the Office of State Fire Marshal, violations in other states or failing to pay outstanding fine amounts may result in the suspension of or revocation of a license.

B. In the event that a firm or individual is found to be in violation of R.S. 40:1484.1 et seq., and these rules, the Office of State Fire Marshal reserves the right to assess enhanced administrative fines for repeated substantiated violations over a period of the preceding 36 months.

C. The following fine schedule shall be used to assess fines to persons, firms, and/or employees who violate the laws and rules governing the amusement industry. Penalties will be imposed to persons, firms and/or employees based on the classification of the offense. Other administrative penalty(ies) may also be imposed.

	Violation	Fine Amount		
		1st Offense	2nd Offense	3rd Offense
(1)	Failure to register an inflatable amusement device, amusement attraction, or amusement ride.	$100.00	$200.00	$300.00
(2)	Operation of inflatable amusement device, amusement attraction, or amusement ride without a certificate of inspection issued by a licensed third-party inspector.	$250.00	$500.00	$750.00
(3)	Notifying the Office of State Fire Marshal of the intent to operate an amusement attraction, or amusement ride less than five days of the operation of the attraction or ride.	250.00 (Per device)	500.00 (Per device)	1,500.00 (Per device)
(4)	Failure to immediately notify the Office of State Fire Marshal of any change in schedule of location or date that occurs less than five days prior to the commencement of operation of the attraction or ride.	250.00 (Per device)	500.00 (Per device)	1,500.00 (Per device)
(5)	Failure to submit to the State Fire Marshal or his designee the set-up and annual reports and any other documentation relating to the set-up inspection or annual inspection of an amusement attraction, amusement ride, or amusement inflatable device during an Office of State Fire Marshal event inspection or audit.	WARNING	$150.00 and 30 DAY DEVICE SUSPENSION	$350.00 and 90 DAY DEVICE SUSPENSION
(6)	Denying access to the State Fire Marshal or his designee to any premises in the state where an inflatable amusement device, amusement attraction, or amusement ride is being installed, built, repaired, or operated for the purpose of ascertaining whether such inflatable amusement device, amusement attraction, or amusement ride is being installed, built, repaired, or operated in accordance with the provisions of this Part and adopted standards, rules, regulations, and applicable manuals, service bulletins, and notices.	$500.00	$1000.00	$2500.00
(7)	Notifying the Office of State Fire Marshal of the intent to operate an inflatable amusement device less than five days of the operation of the device.	200.00 (Per device)	400.00 (Per device)	1,200.00 (Per device)
(8)	Failure to immediately notify the Office of State Fire Marshal of any change in schedule of location or date that occurs less than five days prior to the commencement of operation of the inflatable amusement device.	200.00 (Per device)	400.00 (Per device)	1,200.00 (Per device)
(9)	Failure to submit to the State Fire Marshal or his designee the set-up report and any other documentation relating to the set-up inspection or an annual inspection of an inflatable amusement device during an Office of State Fire Marshal event inspection or audit.	WARNING	$150.00 and 30 DAY DEVICE SUSPENSION	$350.00 and 90 DAY DEVICE SUSPENSION
(10)	Denying access to the State Fire Marshal or his designee to any premises in the state where an inflatable amusement device is being installed, built, repaired, or operated for the purpose of ascertaining whether such inflatable amusement device is being installed, built, repaired, or operated in accordance with the provisions of this Part and adopted standards, rules, regulations, and applicable manuals, service bulletins, and notices.	$500.00	$1000.00	$2500.00
(11)	Failure to conduct a set-up inspection of an inflatable amusement device, amusement attraction, or amusement ride prior to operating the device, attraction, or ride at each event in the state.	$500.00 (Per device)	$750.00 (Per device)	$750.00 (Per device)
(12)	Failure to affix a green event tag on an inflatable amusement device, amusement attraction, or amusement ride that has been inspected and found to be in compliance pursuant to the findings of a set-up inspection and corresponding adopted rules and regulations.	$50.00	$100.00	$200.00
(13)	Failure to notify the Office of State Fire Marshal within two hours after finding that an inflatable amusement device, amusement attraction, or amusement ride is not in compliance pursuant to the findings of a set-up inspection and corresponding adopted rules and regulations; or affixing an impairment tag on the device, attraction, or ride.	$100.00	$250.00	$500.00
(14)	Failure to properly affix an impairment tag on an inflatable amusement device, amusement attraction, or amusement ride that is not in compliance pursuant to the findings of a set-up inspection and corresponding adopted rules and regulations.	$100.00	$250.00	$500.00
(15)	Inspecting or testing of an inflatable amusement device, amusement attraction, or amusement ride by the owner or operator of the same.	$500.00	$750.00	$1000.00
(16)	Failure to notify the Office of State Fire Marshal of a change in the business address of the firm within 10 days of the change.	WARNING	$100.00	$250.00
(17)	Failure to notify the Office of State Fire Marshal of a change in the ownership of or interest in the firm within 10 days of the change.	$250.00	$250.00	$250.00
(18)	Failure to notify the Office of State Fire Marshal of a change in home address within 10 days of the change (Individual).	WARNING	$25.00	$50.00
(19)	Failure to notify the Office of State Fire Marshal of a separation from an employer or change in employer within 10 days of the change (Individual).	WARNING	$25.00	$50.00
(20)	Licensed individual contracting his services as an independent contractor or agent with any other firm, whether such firm is engaged in testing, inspection, or operation.	$750.00	$1000.00	$1250.00
(21)	Engaging in the operation of an inflatable amusement device, amusement attraction, or amusement ride without a valid license issued by the Office of State Fire Marshal (Operator).	$1000.00	$1250.00	$1500.00

	Violation	Fine Amount		
		1st Offense	2nd Offense	3rd Offense
(22)	Aiding and abetting an unlicensed individual, employee, or firm in the testing, inspection, or operation of an inflatable amusement device, amusement attraction, or amusement ride (Operator).	$500.00	$750.00	$1000.00
(23)	Operating an inflatable amusement device, amusement attraction, or amusement ride contrary to applicable codes, standards, or manufacturer's specifications without specific written authorization from the Office of State Fire Marshal (Operator).	$500.00	$750.00	$1000.00
(24)	Submitting an application or any other document to the Office of State Fire Marshal when the person reasonably should have known the document contained false or misleading information (Operator).	$500.00	$750.00	$1000.00
(25)	Engaging in false, misleading, or deceptive acts or practices (Operator).	$500.00 (can include suspension or revocation of license)	$750.00 (can include suspension or revocation of license)	$1000.00 (can include suspension or revocation of license)
(26)	Failure to maintain a valid license (Operator).	$500.00	$1000.00	$2500.00
(27)	Failure to maintain valid insurance coverage as required (Operator).	$500.00	$750.00	$1000.00
(28)	Refusal to admit the state fire marshal or his designated representative to any operating location or to cooperate in the purposes of such admittance (Operator).	$500.00	$750.00	$1000.00
(29)	Failure to maintain his license on his person and present it for inspection (Operator).	WARNING	$100.00	$250.00
(30)	Refusal to cooperate with any lawful investigation by the Office of State Fire Marshal (Operator).	$500.00 (can include suspension or revocation of license)	$1000.00 (can include suspension or revocation of license)	$2500.00 (can include suspension or revocation of license)
(31)	Failure to abide by the administrative rules (Operator).	$500.00	$750.00	$1000.00
(32)	Engaging in the inspection or testing of an inflatable amusement device, amusement ride, or amusement attraction without a valid license issued by the Office of State Fire Marshal (Third-Party Inspector).	$750.00	$1000.00	$1250.00
(33)	Aiding and abetting an unlicensed operator in the operation of an inflatable amusement device, amusement attraction, or amusement ride (Third-Party Inspector).	$250.00	$500.00	$750.00
(34)	Aiding and abetting an unlicensed individual or firm in the inspection or testing of an inflatable amusement device, amusement ride, or amusement attraction (Third-Party Inspector).	$250.00	$500.00	$750.00
(35)	Certifying, testing, or inspecting an inflatable amusement device, amusement attraction, or amusement ride contrary to the provisions of this Part and adopted standards, regulations, and applicable manuals, service bulletins, and notices (Third-Party Inspector).	$1000.00	$2500.00	$3500.00
(36)	Submitting an application or any other document to the Office of State Fire Marshal when the third-party inspector reasonably should have known the document contained false or misleading information (Third-Party Inspector).	$500.00	$1000.00	$2500.00
(37)	Engaging in false, misleading, or deceptive acts or practices (Third-Party Inspector).	$1000.00 (can include suspension or revocation of license)	$2500.00 (can include suspension or revocation of license)	$5000.00 (can include suspension or revocation of license)
(38)	Failure to maintain valid license (Third-Party Inspector).	$500.00	$1000.00	$2500.00
(39)	Failure to maintain valid insurance coverage as required (Third-Party Inspector).	$500.00	$1000.00	$2500.00
(40)	Refusal to admit the state fire marshal or his designated representative to any operating location or to cooperate in the purposes of such admittance (Third-Party Inspector).	$250.00	$500.00	$100.00
(41)	Failure to maintain his license on his person and present it for inspection (Third-Party Inspector).	WARNING	$100.00	$250.00
(42)	Refusal to cooperate with any lawful investigation by the Office of State Fire Marshal (Third-Party Inspector).	$ (can include suspension or revocation of license)	$ (can include suspension or revocation of license)	$ (can include suspension or revocation of license)
(43)	Failure to abide by the administrative rules (Third-Party Inspector).	$500.00	$750.00	$1000.00
(44)	Engaging in the set-up inspection of an inflatable amusement device, amusement ride, or amusement attraction without a valid license issued by the Office of State Fire Marshal (Set-Up Inspector).	$500.00	$750.00	$1000.00
(45)	Aiding and abetting an unlicensed operator in the operation of an inflatable amusement device, amusement attraction, or amusement ride (Set-Up Inspector).	$150.00	$250.00	$350.00
(46)	Certifying or inspecting an inflatable amusement device, amusement attraction, or amusement ride contrary to the provisions of this Part and adopted standards, regulations, and applicable manuals, service bulletins, and notices (Set-Up Inspector).	$1000.00	$2500.00	$5000.00
(47)	Submitting an application or any other document to the Office of State Fire Marshal when the set-up inspector reasonably should have known the document contained false or misleading information (Set-Up Inspector).	$500.00	$1000.00	$2500.00
(48)	Engaging in false, misleading, or deceptive acts or practices (Set-Up Inspector).	$1000.00 (can include suspension or revocation of license)	$2500.00 (can include suspension or revocation of license)	$5000.00 (can include suspension or revocation of license)
(49)	Failure to maintain a valid license (Set-Up Inspector).	$250.00	$500.00	$750.00
(50)	Refusal to admit the state fire marshal or his designated representative to any operating location or to cooperate in the purposes of such admittance (Set-Up Inspector).	$150.00	$250.00	$350.00
(51)	Failure to maintain his license on his person and present it for inspection (Set-Up Inspector).	WARNING	$100.00	$250.00

	Violation	Fine Amount		
		1st Offense	2nd Offense	3rd Offense
(52)	Refusal to cooperate with any lawful investigation by the Office of State Fire Marshal (Set-Up Inspector).	$500.00 (can include suspension or revocation of license)	$1000.00 (can include suspension or revocation of license)	$2500.00 (can include suspension or revocation of license)
(53)	Altering a license, certificate, or other document received from the Office of State Fire Marshal.	$1000.00 (can include suspension or revocation of license)	$2500.00 (can include suspension or revocation of license)	$5000.00 (can include suspension or revocation of license)
(54)	Failure to abide by the administrative rules (Set-Up Inspector).	$500.00	$750.00	$1000.00
(55)	Violation of a cease and desist order by operating an inflatable amusement device, amusement attraction, or amusement ride that was the subject of a red tag affixation or the removal of a red tag by person(s) other than the state fire marshal or his designee.	$1000.00	$2500.00	$5000.00
(56)	Failure to notify the Office of State Fire Marshal after affixing a red event (impairment) tag on an inflatable amusement device, amusement attraction, or amusement ride.	$500.00	$1000.00	$2500.00
(57)	Modification of the passenger restraints, cushioning, or containing devices of an inflatable amusement device, amusement attraction, or amusement ride without prior approval of the manufacturer and the Office of State Fire Marshal.	$500.00	$1000.00	$2500.00
(58)	Failure to maintain an inflatable amusement device, amusement attraction, or amusement ride in accordance with the manufacturers' designs and recommendations.	$500.00	$1000.00	$2500.00
(59)	Failure to immediately notify the Office of State Fire Marshal in the event of an inflatable amusement device, amusement attraction, or amusement ride accident that resulted in serious injury or death.	$1000.00	$2000.00	$3000.00
(60)	Failure to notify the Office of State Fire Marshal in the event of an inflatable amusement device, amusement attraction, or amusement ride accident.	$500.00	$1000.00	$2000.00
(61)	Altering a certificate of licensure or individual license.	$100.00	$250.00	$500.00

D. The state fire marshal may deviate from this fine schedule where circumstances and/or evidence warrant a more stringent or more lenient penalty.

E. In lieu of fine payments, the state fire marshal may require remedial or additional training be obtained by those found in violation.

F. Those offenses not enumerated in this list shall receive penalties for violations of similar nature.

G. The Office of State Fire Marshal may also pursue injunctive relief for any of the above enumerated offenses.

AUTHORITY NOTE: Promulgated in accordance with R.S. 40:1484.2(B).

HISTORICAL NOTE: Promulgated by the Department of Public Safety and Corrections, Office of State Fire Marshal, LR 44:1260 (July 2018).

§2533. Severability

A. If any provision of these rules or the application thereof to any firm, person, employee or circumstance is held invalid for any reason, the invalidity shall not affect the other provisions or any other application of these rules which can be given effect without the invalid provisions or application. To this end, all provisions of these rules are declared to be severable.

AUTHORITY NOTE: Promulgated in accordance with R.S. 40:1484.2(B).

HISTORICAL NOTE: Promulgated by the Department of Public Safety and Corrections, Office of State Fire Marshal, LR 44:1263 (July 2018).

§2535. Third-Party Inspectors; Required Certification; Equivalent Certification; Licensed Engineers; Continuing Education Requirements

A. Required Certification

1. Applicants for third-party inspectors' licenses are required to meet the certification requirements pursuant to R.S. 40:1484.10, et seq., and these rules.

B. Equivalent Certification

1. The Office of State Fire Marshal establishes AIMS Associate Ride Inspector Certification, Level 1 as an equivalent certification, which satisfies the requirements established in R.S. 40:1487.10, et seq.

C. Licensed Engineers

1. Education and Experience Requirements

a. Applicants shall provide documented evidence that the license field and experience in materials testing are relevant to the materials and structural components inherent in the inflatable amusement device, amusement attraction, and amusement ride industry.

D. Continuing Education Requirements

1. The Office of State Fire Marshal reserves the right to establish continuing education requirements for licensees in accordance with R.S. 40:1484.14, et seq., and these rules.

AUTHORITY NOTE: Promulgated in accordance with R.S. 40:1484.2(B).

HISTORICAL NOTE: Promulgated by the Department of Public Safety and Corrections, Office of State Fire Marshal, LR 44:1263 (July 2018).

§2537. Limited Third-Party Specialty Inspector Endorsement

A. In order to conduct material and/or structural testing and perform inspections of inflatable amusement devises within this limited endorsement, a firm and individual must obtain a license from the Office of State Fire Marshal in accordance R.S. 40:1484.1 et seq. and these rules.

B. Required Certification

1. Applicants for Limited Third-Party Specialty Inspector are required to have a NAARSO Limited Specialty Certification.

C. Continuing Education Requirements

1. The Office of State Fire Marshal reserves the right to establish continuing education requirements for licensees in accordance with R.S. 40:1484.14, et seq., and these rules.

D. Insurance Requirements:

1. to engage in the material and/or structural testing and inspection of inflatable amusement devices, firms and individuals are required to obtain a minimum of general liability insurance in the amount of $300,000 coverage insuring the operator against liability for injury suffered by persons occupying, traversing, or otherwise utilizing inflatable amusement devices; or

2. a bond in a like amount; provided, the aggregate liability of the surety under any such bond shall not exceed the face amount thereof; and

3. an original certificate of insurance documenting that the firm has a current and valid worker's compensation insurance policy as required by state law.

E. Errors and Omissions Coverage

1. Pursuant to R.S. 40:1484.16(5), the state fire marshal has suspended the requirement to obtain errors and omissions coverage by those firms and individuals who engage in the material and/or structural testing and inspection of amusement rides, amusement attractions, and inflatable amusement devices.

AUTHORITY NOTE: Promulgated in accordance with R.S. 40:1484.2(B).

HISTORICAL NOTE: Promulgated by the Department of Public Safety and Corrections, Office of State Fire Marshal, LR 44:1263 (July 2018).

§2539. Set-Up Inspectors; Minimum Qualification Requirements

A. In order to obtain a license from the Office of State Fire Marshal to conduct set-up inspections of inflatable amusement devices, amusement attractions, and amusement rides, individuals are required to provide the following documented evidence of education or experience that is relevant to the amusement ride industry.

1. Education Requirements:

a. shall provide a certified transcript detailing specialized schooling or training (i.e. trade, vocational, armed forces, or business). The name and location of school and/or training courses including dates attended, subjects studied, numbers of classroom hours, certificate(s), and any other pertinent information demonstrating the qualifications of the individual to be licensed as a set-up inspector shall be included in the transcript; or

b. shall provide documentation that the individual holds a current Level 1 certification by the National Association of Amusement Ride Safety Officials (NAARSO); or

c. shall provide documentation that the individual holds a current AIMS Associate Ride Inspector, Level 1 certification.

2. Experience Requirements:

a. two years of experience with an insurance company as an inspector of inflatable amusement devices, amusement attractions, and amusement rides;

b. two years of experience inspecting inflatable amusement devices, amusement attractions, and amusement rides and enforcing applicable codes while employed by a state or other governmental body regulating inflatable amusement devices, amusement attractions, and amusement rides;

c. a minimum of three years of experience in the design, repair, operation, or inspection of inflatable amusement devices, amusement attractions, and amusement rides; or

d. a minimum of five years documented field operation and maintenance experience in inflatable amusement devices, amusement attractions, and amusement rides, including responsibility for erection, assembly, and disassembly.

B. In addition to education or experience, the candidate must attest to meeting the following basic requirements:

1. shall be at least 21 years of age and provide date of birth;

2. shall possess a high school diploma or equivalent general education development (GED) diploma;

3. shall possess basic knowledge of ASTM requirements for amusement rides and devices; and

4. the candidate will identify the following supplemental requirements which apply to him or her:

a. possess knowledge of nondestructive testing methods and procedures;

b. possess knowledge of the requirements of the American Welding Society pertaining to the welding of parts;

c. possess basic knowledge of requirements of NFPA 70 (2014 edition), National Electrical Code, article 525, *Carnivals, Circuses, Fairs and Similar Events*; and/or

d. possess basic principles of mechanical and structural engineering.

AUTHORITY NOTE: Promulgated in accordance with R.S. 40:1484.2(B).

HISTORICAL NOTE: Promulgated by the Department of Public Safety and Corrections, Office of State Fire Marshal, LR 44:1263 (July 2018).

§2541. Set-Up Inspections; Individual Ride Units

A. At each event, prior to the operation of an inflatable amusement device, amusement attraction, or amusement ride, licensed set-up inspectors shall utilize the set-up inspection form provided by the Office of State Fire Marshal when conducting inspections. One form shall be completed by each licensed inspector listing the device(s) inspected. Inspection forms shall be maintained for a minimum period of 24 months and be available upon request.

B. Inspections shall include, but are not limited to, a review of necessary documents, observation of and/or examination of the inflatable amusement device, amusement attraction, or amusement ride.

C. Inspections of inflatable amusement devices, amusement attractions, and amusement rides shall include, at a minimum, the foundation, blocking, fuel containers, mechanical and electrical condition and visual operation of the inflatable amusement device, amusement attraction, and amusement ride.

D. Where only individual units of a ride, such as cars, seats, or other carriers are defective and not in compliance with R.S. 40:1484.1 et seq., and/or these rules, such units shall be taken out of service and clearly marked with a yellow event (impairment) tag, provided, however, such defects do not jeopardize the safety of the entire ride.

1. When a red event (impairment) tag is affixed to an individual unit(s) of a ride, the licensed inspector shall notify the Office of State Fire Marshal within two hours of affixation of the tag. Notification shall be made by calling the Office of State Fire Marshal emergency contact number, 1-866-946-1097.

E. The state fire marshal or his designee, upon presenting credentials to the owner and/or operator of the inflatable amusement device, amusement attraction, or amusement ride, is authorized without prior notice to inspect and investigate at reasonable times, and within reasonable limits and manner, any area where inflatable amusement devices, amusement rides or amusement attractions are assembled or are in use.

F. Inflatable amusement devices, amusement attractions, and amusement rides shall be operated in accordance with the manufacturer recommended restrictions and limitations, such as, but not limited to height, weight, age, or passenger placement. In the event the manufacturer has not provided such recommended restrictions, such restrictions and limitations must be established by the operator and shall be submitted to the Office of State Fire Marshal for approval.

AUTHORITY NOTE: Promulgated in accordance with R.S. 40:1484.2(B).

HISTORICAL NOTE: Promulgated by the Department of Public Safety and Corrections, Office of State Fire Marshal, LR 44:1264 (July 2018).

§2543. Prohibited Use

A. If the state fire marshal, his designee, or a licensed inspector finds that an inflatable amusement device, amusement attraction, or amusement ride, presents an imminent danger to life, of injury, or of mechanical/electrical failure, he will attach to such device, attraction, or ride a red event (impairment) tag/cease and desist order. The device, attraction, or ride shall not be used until it is made safe to the satisfaction of a licensed third-party inspector, the state fire marshal, or his designee, and the tag has been removed by the licensed third-party inspector, the state fire marshal, or his designee and replaced with a green event tag with the requisite information thereon.

B. No person shall use or permit to be used, an inflatable amusement device, amusement attraction, or amusement ride which is not properly assembled or which is defective or unsafe in any of its parts, components, controls, or safety equipment.

C. During a lightning storm, a period of tornado alert or warning, or fire, or when violence, riot, or other civil disturbance occurs or threatens an inflatable amusement device, amusement attraction, or amusement ride, or in an area adjacent thereto, passengers shall be unloaded or evacuated from the device, attraction, or ride and the device, attraction, or ride shall be shut down and secured immediately. Operation shall not resume until the situation has returned to a normal, safe operating condition.

D. An inflatable amusement device, amusement attraction, or amusement ride which is exposed to wind or storm with lightning or wind gust above that recommended by the manufacturer, shall not be operated except to release or discharge occupants.

AUTHORITY NOTE: Promulgated in accordance with R.S. 40:1484.2(B).

HISTORICAL NOTE: Promulgated by the Department of Public Safety and Corrections, Office of State Fire Marshal, LR 44:1264 (July 2018).

§2545. Medical and First Aid

A. The owner and/or operator of an inflatable amusement device, amusement attraction, or amusement ride shall ensure the availability of medical aid. In the absence of an infirmary, clinic, or hospital used for the treatment of an injured person, within a 10-mile radius of the device, attraction, or ride, the owner and/or operator shall ensure that a person(s) shall be trained to render first aid. First aid supplies, recommended by the American Red Cross are obtainable from the local Red Cross office, shall be readily available.

1. The operator shall have conspicuously posted at the park, carnival, fair or festival office, the telephone numbers and locations for local physicians, hospitals, ambulance services, and fire departments to be called in the event of an emergency.

2. In the event of a reportable accident involving an inflatable amusement device, amusement attraction, or amusement ride incident resulting in serious injury, the

operator or event foreman shall immediately notify the Office of State Fire Marshal by calling the Office of State Fire Marshal emergency contact number, 1-866-946-1097.

3. A *reportable accident* is defined as:

a. any fatality resulting from the victim's inclusion or participation on, or proximity to an inflatable amusement device, amusement attraction, or amusement ride;

b. bodily injuries resulting from the victim's proximity to the structural collapse or mechanical failure (e.g., flying parts, fragments, etc.) of an inflatable amusement device, amusement attraction, or amusement ride;

c. an injury resulting from the boarding or off-boarding from a stationary amusement attraction or ride; or

d. an injury resulting from the traversing of patrons utilizing stairs, ramps, etc., onto and from an inflatable amusement device, amusement attraction, or amusement ride.

4. After determination and consultation with the owner and/or operator, the Office of State Fire Marshal may require the scene of such incident to be secured and not disturbed to any greater extent than necessary for the removal of the deceased or injured person or persons. If the ride is removed from service by the state fire marshal or his designee, an immediate investigation shall be completed and the ride shall not be released for repair and operation until after a complete investigation has been made by the Office of State Fire Marshal.

AUTHORITY NOTE: Promulgated in accordance with R.S. 40:1484.2(B).

HISTORICAL NOTE: Promulgated by the Department of Public Safety and Corrections, Office of State Fire Marshal, LR 44:1265 (July 2018).

§2547. Operation of Amusement Rides or Attractions

A. The ride operator shall be at least 18 years of age.

B. A ride operator may, however, be between the ages of 15 and 17 only if the subject ride's manual allows a person of that age to perform operations and only if documents are presented to the Office of State Fire Marshal evidencing that the person has received training as to the operation of that ride.

C. The operator of an inflatable amusement device, amusement attraction, or amusement ride shall operate the inflatable amusement device, amusement attraction, or amusement ride in compliance with adopted, applicable standards and these rules, or the equivalence thereof as submitted to and approved by the Office of State Fire Marshal.

D. The operator shall refuse a passenger seeking admission to an inflatable amusement device, amusement attraction, or amusement ride if the passenger cannot meet a guardian or height restriction if the ride is subject to such a restriction. Legible signs to this effect shall be posted in full view of the public seeking admission to inflatable amusement devices, amusement attractions, or amusement rides.

E. The operator of an inflatable amusement device, amusement attraction, or amusement ride shall deny entry to any person, if in the opinion of the operator, the entry may cause above normal exposure to risk of discomfort or injury to the person who desires to enter, or if in the opinion of the operator, the entry may jeopardize the safety of other patrons or employees.

F. All parts of inflatable amusement devices, amusement attractions, or amusement rides, and temporary structures used by passengers or customers shall be maintained in a clean condition.

AUTHORITY NOTE: Promulgated in accordance with R.S. 40:1484.2(B).

HISTORICAL NOTE: Promulgated by the Department of Public Safety and Corrections, Office of State Fire Marshal, LR 44:1265 (July 2018).

§2549. Maintenance and Inspection Records

A. The operator shall retain, for a period of 24 calendar months, maintenance and inspection records for each inflatable amusement device, amusement attraction, and amusement ride.

AUTHORITY NOTE: Promulgated in accordance with R.S. 40:1484.2(B).

HISTORICAL NOTE: Promulgated by the Department of Public Safety and Corrections, Office of State Fire Marshal, LR 44:1265 (July 2018).

§2551. Notification Requirement Regarding Modification of Inflatable Amusement Devices, Amusement Attractions, Amusement Rides; Reidentification

A. If an inflatable amusement device, amusement attraction, or amusement ride is subjected to a minor modification, the owner or operator shall notify the Office of State Fire Marshal prior to the operation of the inflatable amusement device, amusement attraction, or amusement ride and submit an application for a revision of the device, attraction, or ride.

B. In the event of a major modification of an inflatable amusement device, amusement attraction, or amusement ride, the owner or operator shall notify the Office of State Fire Marshal and submit the appropriate registration application in which the owner shall reidentify the inflatable amusement device, amusement attraction, or amusement ride by a different name or identification number, or both. In addition, the owner shall submit for approval documentation equivalent to that required in ASTM Standard F1159-15b, detailing the modification(s). The inflatable amusement device, amusement attraction, or amusement ride shall also be subject to all other provisions of all applicable rules, regulations and statutes as if it were a new ride not previously used.

AUTHORITY NOTE: Promulgated in accordance with R.S. 40:1484.2(B).

HISTORICAL NOTE: Promulgated by the Department of Public Safety and Corrections, Office of State Fire Marshal, LR 44:1266 (July 2018).

§2553. Assembly and Disassembly

A. The operator of an inflatable amusement device, amusement attraction, or amusement ride shall comply with the construction manual or the equivalency thereof as determined by the Office of State Fire Marshal, for the assembly and disassembly of the inflatable amusement device, amusement attraction, or amusement ride. The construction manual or the equivalency thereof as determined by the Office of State Fire Marshal, shall be kept with the inflatable amusement device, amusement attraction, or amusement ride and shall be available by request of a licensed inspector, the state fire marshal, or his designee.

AUTHORITY NOTE: Promulgated in accordance with R.S. 40:1484.2(B).

HISTORICAL NOTE: Promulgated by the Department of Public Safety and Corrections, Office of State Fire Marshal, LR 44:1266 (July 2018).

§2555. Brakes and Stops

A. On an amusement attraction or amusement ride where coasting renders the operation dangerous, either during the period while the ride or attraction is being loaded or unloaded, or in the case of power failure or other unforeseeable situation a method of braking shall be provided.

B. If cars or other components of an amusement attraction or amusement ride may collide in such a way as to cause injuries upon failure of normal controls, emergency brakes sufficient to prevent these collisions shall be provided in accordance with the manufacturer's design, or the equivalency thereof as determined by the Office of State Fire Marshal.

C. On amusement attractions or amusement rides that make use of inclined tracks, automatic anti-rollback devices shall be installed to prevent backward movement of the passenger carrying units in case of failure of the propelling mechanism.

AUTHORITY NOTE: Promulgated in accordance with R.S. 40:1484.2(B).

HISTORICAL NOTE: Promulgated by the Department of Public Safety and Corrections, Office of State Fire Marshal, LR 44:1266 (July 2018).

§2557. Internal Combustion Engines

A. Internal combustion engines for amusement attractions or amusement rides shall be capable of handling the assigned load.

B. Where fuel tanks of internal combustion engines for amusement rides are not of adequate capacity to permit uninterrupted operation during normal operating hours, the amusement ride shall be closed down and unloaded or evacuated during the refueling procedure. The fuel supply shall not be replenished while the engine is running.

C. Where an internal combustion engine for an amusement attraction or amusement ride is operated in an enclosed area, the exhaust fumes shall be discharged to outside the enclosed area, as required by NFPA 70 (2014 edition), National Electrical Code.

D. Internal combustion engines for amusement attractions or amusement rides shall be located to permit proper maintenance and shall be protected by guards, fencing or enclosure in accordance with NFPA 70 (2014 edition), National Electrical Code.

AUTHORITY NOTE: Promulgated in accordance with R.S. 40:1484.2(B).

HISTORICAL NOTE: Promulgated by the Department of Public Safety and Corrections, Office of State Fire Marshal, LR 44:1266 (July 2018).

§2559. Wire Rope

A. Wire rope on amusement attractions or amusement rides shall be thoroughly examined weekly. Wire rope found to be damaged shall be replaced with new rope of proper design and capacity as per the manufacturer's data tag or as approved by the Office of State Fire Marshal. Any of the following conditions shall be cause for rope replacement:

1. In running ropes, six randomly distributed broken wires in one rope lay or three broken wires in one strand of one rope lay;

2. In pendants or standing ropes, evidence of more than one rope lay or three broken wires in one strand of one rope lay;

3. abrasion, scrubbing or peening causing loss of more than 1/3 of the original diameter of the outside diameter of the outside individual wires;

4. corrosion;

5. kinking, crushing, birdcaging, or other damage resulting in distortion of the rope structure;

6. heat damage;

7. reduction from normal diameter of more than 3/64 inch for diameters up to and including 3/4 inch, 1/16 inch for diameters 7/8 inch to 1 1/8 inches, 3/32 inch for diameters 1-1/4 inch to 1 1/2 inches;

8. birdcaging or other distortion resulting in some members of the rope structure carrying more load than others; or

9. noticeable rusting or development of broken wires in the vicinity of attachments. When this condition is localized in an operational rope, it may be eliminated by making a new attachment.

B. Wire ropes used to support, suspend, bear or control forces and weights involved in the movement and utilization of tubs, cars, chairs, seats, gondolas, other carriers, the sweeps, or other supporting members of an amusement ride or attraction shall not be lengthened or repaired by splicing.

AUTHORITY NOTE: Promulgated in accordance with R.S. 40:1484.2(B).

HISTORICAL NOTE: Promulgated by the Department of Public Safety and Corrections, Office of State Fire Marshal, LR 44:1266 (July 2018).

§2561. Hydraulic Systems

A. Hydraulic systems and other related equipment used in connection with amusement attractions or amusement

rides shall be free of leaks and maintained to ensure safe operation at all times.

B. An amusement attraction or amusement ride that depends upon hydraulic pressure to maintain safe operation shall be provided with a positive means of preventing loss in hydraulic pressure that could result in injury to passengers.

C. Hydraulic lines shall be guarded so that sudden leaks or breakage will not endanger the passengers or the public.

AUTHORITY NOTE: Promulgated in accordance with R.S. 40:1484.2(B).
HISTORICAL NOTE: Promulgated by the Department of Public Safety and Corrections, Office of State Fire Marshal, LR 44:1267 (July 2018).

§2563. Protection against Moving Parts

A. The interior and exterior parts of all amusement attractions or amusement rides with which a passenger may come in contact shall be smooth and rounded, free from sharp, rough or splintered edges and corners, with no protruding studs, bolts, screws, or other projections which might cause injury.

B. Interior parts of passenger carrying apparatus upon which a passenger may be forcibly thrown by the action of the ride or attraction shall be adequately padded.

C. Amusement attractions or amusement rides which are self-powered and which are operated by a passenger shall have the driving mechanism guarded and the guard secured in place as to prevent passengers from gaining access to the driving mechanism.

D. Handholds, bars, footrests, and other equipment, as may be necessary for safe entrance and exit to and from amusement attractions or amusement rides, shall be provided and maintained in a safe condition. Such equipment shall be of sufficient strength to support the passengers.

E. Restraining, containing, or cushioning devices, or a combination of these, shall comply with this Subsection and be provided and used on all amusement attractions or amusement rides where:

1. centrifugal and other forces mechanical malfunction could unseat or dislodge a passenger;

2. inadvertent movement of a passenger could cause injury to the passenger or any other passenger; or

3. the speed of the ride presents a hazard to a passenger.

F. Restraining, containing or cushioning devices shall be designed, constructed, installed and maintained so as to provide safe support for passengers.

G. Anchorage for the restraining, containing, or cushioning devices shall have a strength at least equal to the strength of such devices.

H. All passenger restraints, cushioning, or containing devices shall be provided and maintained in accordance with the manufacturers' designs and recommendations and shall not be modified without the approval of the manufacturer and the Office of State Fire Marshal.

I. All exposed mechanical parts shall have guards installed to prevent possible personal contact while in operation. Any means of safeguarding, which may cause injury, shall not be used.

AUTHORITY NOTE: Promulgated in accordance with R.S. 40:1484.2(B).
HISTORICAL NOTE: Promulgated by the Department of Public Safety and Corrections, Office of State Fire Marshal, LR 44:1267 (July 2018).

§2565. Electrical Equipment

A. The National Electrical Code, NFPA 70 (2014 edition), shall be considered as the standard for application in the enforcement of the provisions of R.S. 40:1484.1, et seq. This document may be purchased from the:

National Fire Protection Association
1 Batterymarch Park
Quincy, MA 02169-7471

B. All electrical wiring and equipment used for amusement rides or attractions or for lighting shall be installed and maintained in accordance with the National Electrical Code, NFPA 70 (2014 edition).

1. The outlets of electrical power lines carrying more than 120 volts shall be clearly marked to show their voltage.

2. All electrical transformer substations shall be properly enclosed and proper warning signs shall be posted.

3. Electrical wiring and equipment located outdoors shall be of such quality and construction or protection that exposure to weather will not interfere with its normal operation.

4. Elevated power lines crossing access or other roads within the proximity of an amusement ride or attraction shall be so suspended as to provide a vertical clearance of at least 15 feet from the road surface or three 3 above any vehicle used within the grounds of a carnival or amusement park, whichever is greater. A horizontal clearance of at least three feet shall be provided on each side of the normal passage space of vehicles.

AUTHORITY NOTE: Promulgated in accordance with R.S. 40:1484.2(B).
HISTORICAL NOTE: Promulgated by the Department of Public Safety and Corrections, Office of State Fire Marshal, LR 44:1267 (July 2018).

§2567. Temporary Wiring

A. If temporary wiring is used it shall be in compliance with the applicable section of the National Electrical Code, NFPA 70 (2014 edition).

B. Temporary electrical power and lighting installations shall be permitted during the period of construction and remodeling of buildings, structures, equipment or similar activities.

C. Temporary electrical power and lighting installations shall be permitted for a period not to exceed 90 days.

D. All lamps for general illumination shall be protected from accidental contact or breakage. Protection shall be

provided by elevation of at least 7 feet from normal working surface or by a suitable fixture or lamp holder with a guard.

AUTHORITY NOTE: Promulgated in accordance with R.S. 40:1484.2(B).
HISTORICAL NOTE: Promulgated by the Department of Public Safety and Corrections, Office of State Fire Marshal, LR 44:1267 (July 2018).

§2569. Grounding

A. All grounding shall comply with Article 525 of the National Electrical Code, NFPA 70 (2014 edition).

AUTHORITY NOTE: Promulgated in accordance with R.S. 40:1484.2(B).
HISTORICAL NOTE: Promulgated by the Department of Public Safety and Corrections, Office of State Fire Marshal, LR 44:1268 (July 2018).

§2571. Construction

A. All amusement attractions or amusement rides shall meet the requirements of the ASTM *Standard for the Design and Manufacture of Amusement Rides and Devices* and the NFPA 101 *Life Safety Code* (2015 edition).

B. Water ride data plates shall contain a location number of the ride or flume and the maximum dispatch time interval.

C. The ride operator shall maintain all of the information as required by ASTM F770-15 *Standard Practice for Ownership, Operation, Maintenance, and Inspection of Amusement Rides and Devices*, and make it available to the state fire marshal, or his designee, upon request. If this information is not available, it shall be developed by the owner/operator and submitted to the Office of State Fire Marshal for approval.

AUTHORITY NOTE: Promulgated in accordance with R.S. 40:1484.2(B).
HISTORICAL NOTE: Promulgated by the Department of Public Safety and Corrections, Office of State Fire Marshal, LR 44:1268 (July 2018).

§2573. Means of Access and Egress

A. Safe and adequate means of access and egress from amusement attractions or amusement rides shall be provided as required by the NFPA Life Safety Code 101 (2015 edition), and the ASTM Standard F1159-15b *Standard Practice for Design of Amusement Rides and Devices that are Outside the Purview of Other F24 Design Standards*.

AUTHORITY NOTE: Promulgated in accordance with R.S. 40:1484.2(B).
HISTORICAL NOTE: Promulgated by the Department of Public Safety and Corrections, Office of State Fire Marshal, LR 44:1268 (July 2018).

§2575. Walkways and Ramps

A. Walkways and ramps shall be erected with a slope not greater than 1 in 10 except that when nonslip surfaces are provided, the grade may be increased to a maximum of 1 in 8.

AUTHORITY NOTE: Promulgated in accordance with R.S. 40:1484.2(B).
HISTORICAL NOTE: Promulgated by the Department of Public Safety and Corrections, Office of State Fire Marshal, LR 44:1268 (July 2018).

§2577. Fire Prevention

A. All buildings over one story in height shall be constructed or protected in accordance with NFPA 101 (2015 edition), Chapter 8.

B. All buildings located within 20 feet of lot lines or other buildings on the same lot, shall be of protected noncombustible or protected masonry enclosed construction or better.

C. Fabrics constituting part of an amusement ride or attraction shall be flame resistant to meet the provisions of NFPA 101 (2015 edition), Chapter 8.

D. Approved fire extinguishers in accordance with NFPA 10 (2013 edition) and certified by a Louisiana contractor licensed through the Office of State Fire Marshal to inspect and service portable fire extinguishers, shall be provided at the following locations to secure reasonable and adequate protection from fire hazards:

1. at or near all operating gasoline or diesel engines;

2. at or near all amusement attraction or amusement ride stands, excluding water flumes; and

3. at each food handling booth where cooking is done.

E. Flammable waste such as oily rags and other flammable materials shall be placed in covered metal containers which shall be kept in easily accessible locations. Such containers shall not be kept at or near exits.

F. Gasoline and other flammable liquids and flammable gases when stored shall be kept in reasonably cool and ventilated places. Such liquids shall be in containers as prescribed by NFPA 30 (2015 edition), Chapter 4. Smoking and the carrying of lighted cigars, cigarettes, or pipes is prohibited within 50 feet of any area where such liquids or gases are stored, or are transferred from one container to another. Signage shall be posted stating "No Smoking".

AUTHORITY NOTE: Promulgated in accordance with R.S. 40:1484.2(B).
HISTORICAL NOTE: Promulgated by the Department of Public Safety and Corrections, Office of State Fire Marshal, LR 44:1268 (July 2018).

§2579. Water Flumes, Structural Design

A. Structural Design. The flumes' structural design and materials shall be in accordance with ASTM Standard F1159-15b *Standard Practice for Design of Amusement Rides and Devices that are Outside the Purview of Other F24 Design Standards*. The flumes and pools shall be watertight and their surfaces shall be smooth and easy to clean.

B. All stairways used as part of an amusement attraction or amusement ride shall be constructed to meet the requirements of NFPA 101 (2015 edition).

C. Visitor and Spectator Areas. The space used by visitors and spectators shall be distinctly and absolutely separated from those spaces used by sliders. Visitors and spectators in street clothes may be allowed within the perimeter enclosure if they are confined to an area separated from the space the sliders use.

D. Typical posted user safety warnings for slide operational use:

i. no running, standing, kneeling, rotating, tumbling, or stopping in flumes or tunnels;

ii. no diving from flume at any time;

iii. never use this slide when under the influence of alcohol or drugs;

iv. only one person at a time. Obey instructions of top pool supervisor and lifeguard at all times;

v. never form chains unless authorized by slide manager or by posted instructions;

vi. keep hands inside the flume;

vii. leave the landing pool promptly after exiting from slide; and

viii. keep all glasses, bottles and food away from pools.

AUTHORITY NOTE: Promulgated in accordance with R.S. 40:1484.2(B).
HISTORICAL NOTE: Promulgated by the Department of Public Safety and Corrections, Office of State Fire Marshal, LR 44:1268 (July 2018).

§2581. Pumps

A. Pumps and motors shall be provided to circulate the water in the splash pool and slide.

B. Pump units shall be accessible for inspection and service in accordance with NFPA 70 (2014 edition).

C. All motors shall have thermal overload protection in accordance with NFPA 70 (2014 edition).

D. The motor frame shall be properly grounded, in accordance with NFPA 70 (2014 edition).

AUTHORITY NOTE: Promulgated in accordance with R.S. 40:1484.2(B).
HISTORICAL NOTE: Promulgated by the Department of Public Safety and Corrections, Office of State Fire Marshal, LR 44:1269 (July 2018).

§2583. Water Quality

A. Water quality shall be maintained to meet the requirements established by the Louisiana Department of Health and Hospitals.

AUTHORITY NOTE: Promulgated in accordance with R.S. 40:1484.2(B).
HISTORICAL NOTE: Promulgated by the Department of Public Safety and Corrections, Office of State Fire Marshal, LR 44:1269 (July 2018).

§2585. Electrical Safety and Lighting

A. The 2011 edition of the National Electrical Code, as published by the National Fire Protection Association, shall be used for the wiring and grounding of all electrical equipment associated with a flume and for the grounding of all metallic appurtenances.

B. Whenever flumes are operated after dark, artificial lighting shall be provided in upper and lower pool and deck areas, walkways, stairways, and flumes.

AUTHORITY NOTE: Promulgated in accordance with R.S. 40:1484.2(B).
HISTORICAL NOTE: Promulgated by the Department of Public Safety and Corrections, Office of State Fire Marshal, LR 44:1269 (July 2018).

§2587. Operation, Water Flumes

A. The manufacturer or the general contractor of the flume shall provide the operator with a detailed written operational manual, or guide, for all phases of operations and normal maintenance of each component of the system as per ASTM Standard F770-15 *Standard Practice for Ownership, Operation, Maintenance, and Inspection of Amusement Rides and Devices*.

B. The guide shall be kept in a secure area and made available to each employee or inspector as needed.

AUTHORITY NOTE: Promulgated in accordance with R.S. 40:1484.2(B).
HISTORICAL NOTE: Promulgated by the Department of Public Safety and Corrections, Office of State Fire Marshal, LR 44:1267 (July 2018).

§2589. Responsibility of Flume Operators

A. Flume operators shall meet the requirements of ASTM Standard F770-15 Standard Practice for Ownership, Operation, Maintenance, and Inspection of Amusement Rides and Devices.

AUTHORITY NOTE: Promulgated in accordance with R.S. 40:1484.2(B).
HISTORICAL NOTE: Promulgated by the Department of Public Safety and Corrections, Office of State Fire Marshal, LR 44:1269 (July 2018).

§2591. Fixed Operation Location Emergency Procedures

A. For fixed operation locations, a written plan for emergencies shall be carefully devised, kept current, and a copy of which shall be readily available upon demand. All employees shall be trained and drilled periodically in the execution of the plan.

B. The emergency plan shall encompass crowd control and safe evacuation, drownings, electrical shock, heat prostration, fractures, poisonings, cuts and burns, neck and back or spinal injuries, and exposure to chlorine gas.

C. All water flume locations shall have posted by the phones a list of current emergency numbers, to include the nearest available ambulance service, hospital, rescue squad, police assistant secretaries, and fire department.

AUTHORITY NOTE: Promulgated in accordance with R.S. 40:1484.2(B).
HISTORICAL NOTE: Promulgated by the Department of Public Safety and Corrections, Office of State Fire Marshal, LR 44:1269 (July 2018).

§2593. Go-Kart Rules and Regulations

A. Kart Design

1. The speed of each kart shall be limited or governed to not exceed the following: The maximum adult track speed shall not exceed 25 mph and kiddie track speed shall not exceed 10 mph. Speeds other than defined will require approval from the Office of State Fire Marshal.

2. Whenever the design of a kart enables the readjustment of the governing speed, the means of adjustment shall not be accessible to the patron of the kart.

3. The seat, backrest, seat belts, and leg area of every kart shall be designed to retain the patron inside the kart in the event of a collision or overturn.

4. Karts shall be fitted with a shoulder harness and/or belt restraint system as required by the kart manufacturer and acceptable to the Office of State Fire Marshal.

5. Karts shall be provided with sufficient guards to prevent anyone from coming in contact with the drive chains, belts, hot mufflers, engines or rotating parts.

6. Karts shall have bumpers, wheels, and body parts that are comparable to that installed by the original manufacturer.

7. Kart wheels shall be enclosed, guarded, or operated so the wheels of a kart cannot interlock with or ride over the wheels of another kart.

8. The kart steering wheel, hub, and all exposed components shall be padded or helmets and face shields worn to minimize the risk of injury to any patron in the event of a collision or overturn.

9. The kart fuel tank shall be designed and mounted to prevent it from damage or leaking in the event of a collision or overturn.

10. Headrests or roll bars on a kart shall extend above the patron's head and be capable of supporting the weight of the kart and patron as required by the manufacturer. In the event the manufacturer fails to recommend or address this area, the karts shall be equipped with roll bars acceptable to the Office of State Fire Marshal. Any deviations from this requirement shall be submitted to and approved by the Office of State Fire Marshal.

11. Karts shall be provided with impact absorbing bumpers, or energy absorption body parts.

12. Karts shall have sufficient muffler systems installed to prevent any noise levels which will interfere with the track operations, adjacent businesses, residential areas, or damage the hearing of employees or patrons.

13. The brake and throttle controls on a kart shall be clearly identified. The brake and throttle controls shall be foot operated and return automatically to a non-operational position when released.

14. Karts shall be individually identified either by numbers, alpha characters, or other markings acceptable to the Office of State Fire Marshal.

15. Karts shall be inspected and maintained in accordance to manufacturer standards to include, but not limited to, the frame, engine, body, safety restraints, tires, etc.

16. Records of kart inspections and maintenance shall be retained by the operator for a period of 24 calendar months.

B. Track Design

1. The design of the kart track shall be consistent with the kart manufacturers' recommendations. In the absence of any manufacturers' recommendations, the track design shall comply with the current industry standards acceptable to the Office of State Fire Marshal.

2. Cones may be used on tracks as a warning device and to notify the patron of upcoming changes in the track conditions and are used for the following specific reasons:

a. to notify drivers of impending course changes;

b. to outline the track and mark key points such as the apex of the turns; and

c. as a warning device to notify the drivers of the severity of upcoming turns by the location and number of cones prior to the turn;

d. cone placement:

i. on the inside corners; one cone to alert the driver and locate the apex;

ii. on the outside corner; two cones to identify minor course changes;

iii. three cones to identify course changes which requires a slower speed to safely negotiate the turn; and

iv. four and five cones to identify areas where both slower speed and applied braking will be necessary to safely complete the course.

e. once the proper cone locations have been located for the track, these locations shall be marked with high visibility paint under the proper location of the cone. This will alert racing attendants to the correct location of the cones when they are displaced.

3. The track shall have a hard, smooth surface.

4. The track shall provide road grip sufficient to enable the kart to be driven safely at maximum speed and shall be free of ruts, holes, bumps, water, oil, dirt, or other debris.

5. Track surface and design not covered by manufacturers' recommendations or in the absence of such recommendations must be approved by the Office of State Fire Marshal.

6. The width of the track must be a minimum of 16 feet and maximum of 25 feet. The turns on an oval track must be a minimum of 5 feet wider than the straight away. The minimum radius of the turns is 15 feet. Any deviations from these requirements shall be submitted to and approved by the Office of State Fire Marshal.

7. The track shall have signs that indicate one direction of travel and no U-turns permitted. These signs

shall be posted at various locations around the track perimeter. Signs, signal lights and other safety equipment shall be maintained in operational condition at all times when open to the public.

8. The track shall have no intersecting course configurations. Pit entrances and exits are allowed but appropriate clearly posted signage indicating the entry and exit locations are required to prevent collisions.

9. The shoulder shall be level with the track and marked with cones. White or yellow lines at least 4 inches in width shall be used to mark all inside and outside edges of the kart track except where barriers are provided along the inside and outside edges of the kart track.

10. Barriers shall be designed to prevent a kart from overturning or running over or under the barrier and designed to bring a kart safely to a full stop or guide the kart safely back onto the track.

a. Barriers shall be placed:

i. between tracks or sections of tracks within 30 feet of each other and constructed of materials that will not readily ignite;

ii. between the track and obstructions or hazards located with 30 feet from the track;

iii. along all non-access and non-egress edges of the pit area; and

iv. between the track and any area accessible to spectators.

11. Fencing shall be at least 48 inches in height. The fence and gates shall be designed so a 4-inch sphere cannot pass through any opening. Fencing shall be located around every kart track.

12. Pit area for loading and unloading must be separated from the track by a fence or barrier. The pit area must be the same surface as the track and have separate, clearly marked entrance and exit lanes.

13. Electrical installations must comply with the National Electrical Code, NFPA 70 (2014 edition), and include lighting for night operation, if operations are conducted after dark.

14. Proposals for construction of new kart tracks and proposals for the renovation, alteration, or modification of existing tracks in the State of Louisiana shall be submitted to the Office of State Fire Marshal and other appropriate agencies before beginning construction. The following information shall accompany any application or proposal and shall include but not be limited to:

a. one copy of site plans and all accompanying documentation;

b. a copy of all required local, parish or state permits such as (but not limited to) business licenses, and/or electrical, building, or plumbing permits. When all inspections are completed by local, parish or state agencies one copy of the completed inspection report shall be sent to the Office of State Fire Marshal for enclosure in the facility's permanent file.

15. Fire Protection

a. Kart tracks shall be equipped with ABC dry chemical fire extinguishers with a 4A 80BC rating with a travel distance not to exceed 50 feet as provided for in NFPA 10 (2013 edition), *Standard for Portable Fire Extinguishers*.

b. The required fire extinguisher shall be readily accessible from all areas of the track and one fire extinguisher shall be kept in the pit and refueling area(s). The fire extinguisher location shall be prominently marked, easily accessible and approximately 36 inches above the ground.

16. Refueling Area

a. Karts shall be refueled in a designated location remote from any area accessible to the public. Fuel storage and transfer cans must meet the requirements of NFPA 30 (2015 edition). Any fuel spillage must be promptly cleaned and prevented from running onto the track or any area accessible to the public. Warning signs must be prominently displayed stating that smoking is prohibited in the refueling area.

b. All kart motors shall be turned off during refueling.

17. Track Operation

a. Karts may only be operated by patrons within height limits set by the manufacturer. If no height limit is set by the manufacturer, patrons shall be at least 52 inches tall and have a leg length that can reach the brake and throttle controls from the patron's seat in order to drive an adult kart.

b. Only patrons less than 52 inches in height with a leg length sufficient to reach the brake and throttle controls from the patron's seat shall be permitted to operate a kiddie kart.

c. Adult karts and kiddie karts shall not be operated on the same track at the same time.

d. No kart shall be operated during a lightning storm, a period of tornado warning, fire, riot, or other civil disturbance in the area of the track or in an adjacent area. If any of these events occur while the track is in operation, patrons shall be unloaded and evacuated from the ride and the ride shut down until normal, safe operational conditions are established.

e. Kart tracks shall be monitored during operation either directly by attendants, or indirectly by electronic visual and audio means acceptable to the Office of State Fire Marshal.

f. A kart losing oil or fuel shall immediately be removed from the kart track. All karts must be stopped immediately and the track cleaned prior to restarting.

g. When the kart manufacturer recommends, or they are deemed necessary by the Office of State Fire Marshal, the use of helmets must be provided for all patrons to use.

Helmets, if used, must fit the patron's head correctly. All helmets must be cleaned with disinfectant twice daily.

h. Karts designed for single or multiple riders shall use a shoulder harness and/or belt restraint system as required by the kart manufacturer. When deemed necessary for additional protection of kart patrons, the Office of State Fire Marshal may require the addition and use of a shoulder harness or belt restraint system on all karts.

i. Patron's loose clothing and hair longer than shoulder length must be secured prior to operating any kart. Fully enclosed shoes must be worn by kart patrons at all times during operation of a kart.

j. Patrons are prohibited from smoking during kart operation.

k. Track attendants shall not allow patrons to leave their karts either in the pit or on the track unless assisted by track or pit attendants.

l. The kart track operator shall post a conspicuous warning sign at the entrance to the kart track. The sign shall be at least 2 feet by 2 feet in sharply contrasting colors and shall contain manufacturer warnings regarding medical restrictions, if any, for ride patrons.

m. The kart track operator must have a sign posted at the ticket window or track entrance and in the pit area that conveys, at a minimum, the following rules and regulations:

i. The patron height limit specified by the manufacturer, or no less than 52 inches for adult karts and no more than 52 inches for kiddie karts.

ii. Keep both hands on the wheel and both feet in the kart at all times. Do not get out of the kart unless track attendant is present.

iii. All loose clothing and hair longer than shoulder length must be secured. Fully enclosed shoes must be worn by kart patrons at all times during operation of kart.

iv. No smoking in kart or pit area.

v. Persons under the influence of intoxicants will not be allowed to operate karts.

vi. The use of private karts or vehicles will be prohibited on kart track when they are open to the public.

C. All plans and accompanying documents and any requests for deviations from the requirements herein can be submitted online to the Office of State Fire Marshal by utilizing the agency's Information Management System (OSFM-IMS), which is accessible via the agency's website (www.lasfm.org).

D. Record Retention and Inspection

1. Daily inspections must be made on all karts prior to operation. Inspections shall include but not be limited to: tires, padding, steering wheel, frame welds, spindles, axles, seat or shoulder belts, roll bars, gasoline tank condition, brake and gas pedal operation, and other parts as recommended by the kart manufacturer or the Office of State Fire Marshal.

2. Weekly, monthly and annual inspections shall be performed as recommended by the kart manufacturer or the Office of State Fire Marshal.

3. A track operation manual shall be written in the English language and available for review by the Office of State Fire Marshal.

4. The kart track shall have and demonstrate an emergency plan for evacuation of patrons and employees in the event of an emergency. This shall include, but not be limited to, fires, kart collisions, dangerous weather, obstructions on the track, handling intoxicated patrons, and emergency first aid.

5. The kart track shall maintain records of all required inspections for a period of 24 months.

AUTHORITY NOTE: Promulgated in accordance with R.S. 40:1484.2(B).

HISTORICAL NOTE: Promulgated by the Department of Public Safety and Corrections, Office of State Fire Marshal, LR 44:1269 (July 2018).

Chapter 26. Commercial Building Energy Conservation Code

§2601. General Provisions

A.1. ANSI/ASHRAE/IESNA Standard 90.1-2007 is hereby adopted as the Commercial Building Energy Conservation Code for applicable buildings.

2. The International Energy Conservation Code, 2009 edition, is hereby adopted as the Commercial Building Energy Conservation Code for applicable buildings not covered by the preceding part.

3. Commercial buildings constructed, repaired, or altered on or after July 20, 2011 shall comply with the applicable standard referenced in this Part.

B. In accordance with R.S. 40:1730.45 et seq., no commercial building shall be constructed, altered, or repaired in Louisiana until energy code compliance documents have been submitted to and reviewed by the State Fire Marshal for compliance with the Commercial Building Energy Conservation Code. For state owned facilities, statewide enforcement of the Commercial Building Energy Conservation Code shall be the responsibility of the Facility Planning and Control Section of the Division of Administration. As such, energy code compliance documents are not required as part of the submission for state owned buildings to the Office of State Fire Marshal.

C. It shall be the policy of the Office of State Fire Marshal that energy code document review will be required on any building covered by the Commercial Building Energy Conservation Code.

D. In order to expedite plan review and not delay construction or occupancy of affected buildings, the state fire marshal shall have the authority to issue a 21-day release for buildings for which the initial plan submission did not include a complete, valid submission of energy code documents. In the event that such a release is issued, parties submitting plans without a complete, valid submission of

energy code documents will be notified in writing of the energy code requirements and have 21 days to submit the required energy code documentation. During this time, initial plan review may be completed, thereby allowing construction to commence. Failure to submit required energy code compliance documents within said 21 days will result in a letter of apparent noncompliance. Said letter shall be either in the form of a statement in the plan review letter or as a separate letter.

E. A complete, valid submission of energy code documents shall consist of documents as detailed in LAC 55:V.2604.

F. Parties submitting code compliance documents that appear to the state fire marshal to conform with the Louisiana Commercial Building Energy Conservation Code shall be furnished a letter of apparent compliance. Said letter shall be either in the form of a statement in the plan review letter or as a separate letter.

G. Parties submitting code compliance documents that appear to the state fire marshal not to comply with the Louisiana Commercial Building Energy Conservation Code shall be furnished a letter of apparent noncompliance. Said letter shall be either in the form of a statement in the plan review letter or as a separate letter. This letter of apparent noncompliance shall not delay the state fire marshal's normal project review process or the ability of a local building code enforcement entity to issue a building permit or use and occupancy certificate.

H. Parties receiving a letter of apparent noncompliance shall be entitled to submit revised plans, documentation or other evidence to the state fire marshal for a reevaluation of the project's compliance with the Louisiana Commercial Building Energy Conservation Code. In accordance with R.S. 40:1730.47(A), a $10 fee shall be charged by the state fire marshal for reevaluation of energy code compliance documents.

I. The letter of apparent compliance or apparent noncompliance from the state fire marshal shall be kept at the site of the project for as long as the structure is in the process of construction, alteration or repair.

J. The owners of all structures shall retain this letter of apparent compliance or apparent noncompliance from the state fire marshal in a safe place for as long as the structure is occupied, used or both.

K. The Office of State Fire Marshal shall not be required to retain any copy of the reviewed plans, specifications, energy code compliance documents, or letter of apparent compliance or apparent noncompliance.

AUTHORITY NOTE: Promulgated in accordance with R.S.40:1730.41 et seq. and 40:1563 et seq.

HISTORICAL NOTE: Promulgated by the Department of Public Safety and Corrections, Office of State Fire Marshal, LR 31:2951 (November 2005), amended LR 37:2185 (July 2011).

§2602. Definitions

Alteration—alterations, renovations or repairs to existing buildings in accordance with R.S. 40:1574(C), (D), (E), (F), and (G).

ANSI/ASHRAE/IESNA 90.1—the latest edition adopted by the State Fire Marshal, pursuant to the provisions of the Louisiana Administrative Procedure Act, of the document developed by the American Society of Heating, Refrigerating, and Air Conditioning Engineers and the Illuminating Engineering Society of North America entitled "Energy Standard for Buildings Except Low-Rise Residential Buildings."

COMcheck—the commercial building energy code compliance package, including computer software available from the United States Department of Energy, as a method of demonstrating compliance with ASHRAE/IES 90.1.

Commercial Buildings—all buildings designed for human occupancy except one and two family dwellings.

Commercial Processing—see industrial occupancy.

EPAct—the Energy Policy Act of 1992 enacted by the Congress of the United States, as amended.

Historic Buildings—those buildings specifically designated as historically significant by the state historic preservation officer or by official action of a local government.

Industrial—areas of buildings intended primarily for manufacturing, commercial, or industrial processing. For purposes of determining applicability with requirements of the Commercial Building Energy Conservation Code, buildings or portions thereof in which products are manufactured or in which processing, assembling, mixing, packaging, finishing, decorating, repairing, or similar operations are conducted.

International Energy Conservation Code—the latest edition adopted by the State Fire Marshal, pursuant to the provisions of the Louisiana Administrative Procedure Act, of the document developed by the International Code Council, Inc., entitled "International Energy Conservation Code", also referred to as "IECC."

Low-Rise Residential—structures used primarily for residential purposes of three stories or fewer above grade, excluding one and two family dwellings.

Manufacturing—see *industrial*.

Repair or *Renovation*—alterations, repairs or renovations to existing buildings in accordance with R.S. 40:1574(C), (D), (E), (F), and (G).

REScheck—the International Energy Conservation Code compliance package, including computer software available from the United States Department of Energy, as a method of demonstrating compliance with the International Energy Conservation Code.

Residential—spaces in buildings used primarily for living and sleeping. Residential spaces include, but are not limited to, dwelling units, hotel/motel guest rooms, dormitories,

nursing homes, patient rooms in hospitals, lodging houses, fraternity/sorority houses, hostels, prisons, and fire stations.

AUTHORITY NOTE: Promulgated in accordance with R.S.40:1730.41 et seq. and 40:1563 et seq.

HISTORICAL NOTE: Promulgated by the Department of Public Safety and Corrections, Office of State Fire Marshal, LR 31:2951 (November 2005).

§2603. Energy Code Application and Scope

A. All commercial building plans submitted to the Office of State Fire Marshal that are included in the scope of the Commercial Building Energy Conservation Code shall contain energy code compliance documentation as required by LAC 55:V.2604.

B. Additions to existing buildings will be treated as new construction.

C. General Exemptions. Buildings or portions of buildings that meet the criteria outlined in R.S. 40:1730.44.C or by the scope of ANSI/ASHRAE/IESNA Standard 90.1 are exempt from the energy code.

D. The provisions of state adopted laws, rules, codes, or standard addressing life safety, accessibility, health, or fire protection, shall prevail where any conflicts or duplication occur.

E. Renovated Buildings. To determine applicability of the Commercial Building Energy Conservation Code to altered, repaired or renovated buildings, see R.S. 40:1574.C, D, E, F, and G. Altered, repaired or renovated buildings covered by these Sections are included in the scope of the energy code.

F. Historic Buildings. As permitted by R.S. 40:1730.44.D, the state fire marshal may modify the specific requirements of the Commercial Building Energy Conservation Code for historic buildings and require alternate requirements which will result in a reasonable degree of energy efficiency. It is the policy of the state fire marshal to encourage historic preservation and the preservation of Louisiana's architectural heritage. When applying the requirements of the energy code, the state fire marshal shall take into consideration the impact of these requirements on the historic integrity of existing facilities. Parties submitting plans for renovating historic buildings must demonstrate a good faith attempt to comply with the energy code. However, if compliance with the energy code will compromise the historic integrity of the affected building, it should be so noted on the plan submission. In such cases, the state fire marshal will accept reasonable attempts to improve the energy efficiency of the building as meeting the requirements of the energy code.

AUTHORITY NOTE: Promulgated in accordance with R.S.40:1730.41 et seq. and 40:1563 et seq.

HISTORICAL NOTE: Promulgated by the Department of Public Safety and Corrections, Office of State Fire Marshal, LR 31:2952 (November 2005), amended LR 37:2186 (July 2011).

§2604. Compliance Procedures for the Energy Code

A. For commercial buildings in all categories except low-rise residential buildings identified in ANSI/ASHRAE/IESNA 90.1, demonstration of compliance with COMcheck, materials as developed by Pacific Northwest National Laboratory for the U.S. Department of Energy's Office of Codes and Standards, available from the U.S. Department of Energy, shall be deemed to comply with the Commercial Building Energy Conservation Code. Compliance must be demonstrated individually for each of three components: envelope, lighting (including electrical), and mechanical (including hot water).

B. For low-rise residential buildings not covered by LAC 55:V.2604.A., except one and two family dwellings, demonstration of compliance with REScheck, materials as developed by Pacific Northwest National Laboratory for the Department of Housing and Urban Development and the Rural Economic and Community Development under direction of the U.S. Department of Energy's Office of Codes and Standards, available from the U.S. Department of Energy, for the requirements of the IECC shall be deemed to comply with the Commercial Building Energy Conservation Code.

AUTHORITY NOTE: Promulgated in accordance with R.S.40:1730.41 et seq. and 40:1563 et seq.

HISTORICAL NOTE: Promulgated by the Department of Public Safety and Corrections, Office of State Fire Marshal, LR 31:2952 (November 2005).

§2605. Amendments to ANSI/ASHRAE/IESNA 90.1 for Louisiana

A. The following amendments to COMCheck are adopted for Louisiana.

1. Remove requirement that air handlers run continuously.

2. Remove all requirements for use of economizers anywhere in Louisiana.

3. Delete IECC Section 103, ‘Construction Documents’, Section 104, ‘Inspections’, and Section 107, ‘Fees’, in their entirety.

4. Modify IECC Section 101.2, ‘Scope’, to read: “This code applies to Low-Rise Residential buildings.”

AUTHORITY NOTE: Promulgated in accordance with R.S.40:1730.41 et seq. and 40:1563 et seq.

HISTORICAL NOTE: Promulgated by the Department of Public Safety and Corrections, Office of State Fire Marshal, LR 31:2952 (November 2005), amended LR 37:2186 (July 2011).

Chapter 27. Industrialized Buildings

§2701. Definitions

A. For the purpose of this Chapter, the following words, unless the context does not permit, shall have the meanings indicated.

Agency—an individual or entity, which may be a private sector entity, a state department or a local government determined by the State Fire Marshal to be qualified pursuant to this Chapter to inspect the construction of industrialized building units, systems, or the component parts thereof together with the pre-approved plans, specifications, and quality control procedures to ensure that such units, systems, or component parts are in full

compliance with the codes and standards herein adopted and to assign and attach the decal of the State Fire Marshal to such units complying with those standards.

Building Code—the Louisiana State Uniform Construction Code provided for in R.S. 40:1730.21 et seq.

Building Official—the officer or other designated authority or their duly authorized representative charged with the administration of the applicable technical codes in the subject jurisdiction.

Closed Construction—a building, component, assembly, subassembly, or system manufactured in such a manner that all portions cannot be readily inspected at the installation site without disassembly or destruction thereof.

Component—see *modular component.*

Construction Site Building—a commercial structure that is not open to the public and is used for any purpose at a commercial site by a person constructing a building, road, bridge, utility, or other infrastructure or improvement to real property.

Council—the Louisiana State Uniform Construction Code Council.

Data Plate—a plate which is permanently mounted on an industrialized building or component which contains design information as noted in §2713.I herein.

Dealer—any person, corporation or business which has been registered to engage in leasing, selling or distribution of industrialized buildings for placement in the state of Louisiana.

Decal—the approved form of label issued by the Office of State Fire Marshal to be permanently affixed to the building or module indicating that it has been constructed to meet or exceed the code requirements and in compliance with the provisions of this Part.

Enforcement Agency—an agency of state or local government with authority to make inspections of buildings and to enforce the codes which establish standards for design, construction, erection, alteration, repair, modification, or demolition of public or private buildings, structures or facilities.

Equipment—all equipment, material, appliances, devices, fixtures, fittings or accessories installed in, or used in, the manufacture and assembly of an industrialized building.

Facility—the physical location of a manufacturing plant where buildings or components are constructed, or the physical location of a dealer where buildings or components are stored.

Industrialized Building—a commercial structure that is erected or installed using one or more modules or one or more modular components that are constructed at a location other than the commercial site; is designed to be used as a commercial building when the module or the modular component is transported to the commercial site and erected or installed; includes the structure's plumbing, heating, air conditioning, and electrical systems; includes a permanent commercial structure and a commercial structure designed to be transported from one commercial site to another commercial site. An *industrialized building* does not include a commercial structure that exceeds three stories or forty-nine feet in height as measured from the finished grade to the peak of the roof.

Installation—the assembly of an industrialized building component or system on site and the process of affixing an industrialized building component or system to land, a foundation, or an existing building, or service connections which are part thereof.

Labeled—affixed with a decal or data plate.

Manufacture—the process of making, modifying, fabricating, constructing, forming or assembling or reassembling a product from raw, unfinished, semifinished, or finished materials.

Manufacturer—any person who, or entity which, has been registered to produce or modify industrialized buildings for placement in the state of Louisiana.

Model—a specific design of industrialized buildings which is based on size, room arrangement, method of construction, location, arrangement or size of plumbing, mechanical or electrical equipment and systems therein in accordance with plans submitted to the Office of State Fire Marshal.

Modification—any change to an industrialized building which affects the structural, electrical, thermal, mechanical, plumbing systems, life safety, means of egress, material flammability/flame spread or accessibility of the building to persons with disabilities.

Modular Component—a structural part of a building constructed at a location other than the commercial site in a manner that prevents the construction from being adequately inspected for building code compliance at the commercial site without damage or removal and reconstruction of a part of the building.

Modular Section—see *module*.

Module—a three dimensional section of industrialized building designed and approved to be transported as a single section independent of other sections, with or without other modules or modular components, that prevents the construction from being adequately inspected for building code compliance without damage or removal and reconstruction of a part of the building.

Occupancy Classification—the purpose for which a building, or part thereof, is used or intended to be used as defined in the codes and standards adopted herein.

Open Construction—any industrialized building, building component, assembly or system manufactured in such a manner that all parts or processes of manufacture can be readily inspected at the installation site without disassembly, damage to or destruction thereof.

Quality Control Manual—a manual which contains all aspects of quality control procedures to be utilized by an entity or individual performing a function regulated hereby.

Standard Design—any building system, model, series or component intended for duplication or repetitive manufacture.

State Fire Marshal—the Louisiana Office of State Fire Marshal Code Enforcement and Building Safety.

Third-Party—an individual or individuals registered with the Council as a code enforcement officer in accordance with R.S. 40:1730.34 through 1730.38 and LAC 55:VI:7.

Traveler—a form utilized in a manufacturing facility in conjunction with the manufacturer's quality control program to indicate that all quality control inspections are conducted during the manufacturing process and that all inspections indicate compliance with the approved plans.

AUTHORITY NOTE: Promulgated in accordance with R.S. 40:1730.51 through 1730.66.

HISTORICAL NOTE: Promulgated by the Department of Public Safety and Corrections, Office of State Fire Marshal Code Enforcement and Building Safety, LR 35:2467 (November 2009), amended LR 36:1020 (May 2010).

§2703. Administration and State Fire Marshal Authority

A. Forms. A manufacturer's application for registration, a dealer's application for registration, a plan review application, a decal request form, and a decal disposition report per §2727 herein shall be submitted on forms provided by the State Fire Marshal.

B. Registration. The State Fire Marshal shall register manufacturers and dealers in accordance with this chapter. All registrations and approvals granted by the State Fire Marshal pursuant to §2705 and §2707 herein are subject to revocation for failure to adhere to these rules, as provided for in §2729 herein.

C. Third-Parties. Third-parties shall be properly registered with the council for the type of project he or she will inspect.

1. Monitoring. The State Fire Marshal, through his employees or his designated performance auditors, shall monitor the performance of manufacturers, dealers, and third-parties.

2. Auditing. Each registered manufacturer shall be subject to a performance audit at a minimum of once every three years. Unannounced visits to manufacturing facilities may be utilized unless impractical. Information obtained through monitoring shall remain confidential to the extent permitted by law. Manufacturers shall provide the auditor access to records, facilities and personnel as requested by the auditor. The auditor shall collect information through interviews, examination of documents and observation of activity to determine whether the manufacturer complies with the applicable codes and standards. Any determination of nonconformance with any applicable provision shall be reported to the manufacturer. The report shall identify the facts that support the finding of nonconformity and recommend corrective action. The State Fire Marshal shall determine the appropriate corrective action subject to the requirements of §2729 herein.

3. Oversight. The manufacturer shall be responsible for correcting code violations. The State Fire Marshal shall make an independent determination regarding the existence of a violation. The State Fire Marshal may allow a third-party to investigate complaints and notify the State Fire Marshal regarding the existence of a code violation and disposition thereof.

4. Permits. In accordance with the requirements set forth in R.S. 40:1730.63(A) and 1730.65.C(3). The State Fire Marshal shall provide by rule for the placement of decals or insignia on each transportable modular section or modular component to indicate compliance with the building code. A parish or municipal building official is authorized to require, in accordance with these rules, that all modules or modular components bear an approved decal. As such, no governmental subdivision in the state of Louisiana shall issue any building permit for installation of an industrialized building unless the building contains a valid decal issued in accordance with §2723 herein.

5. Occupancy. In accordance with the requirements set forth in R.S. 40:1730.56(A) and (B), industrialized buildings constructed after January 1, 2007 shall meet or exceed the requirements of the building code and the State Fire Marshal in accordance with R.S. 40:1574 through 1593. Occupancy of any structure found in violation of the law and these rules will not be granted by the State Fire Marshal as provided for in LAC 55:V:307-309 until compliance can be verified.

AUTHORITY NOTE: Promulgated in accordance with R.S. 40:1730.51 through 1730.66.

HISTORICAL NOTE: Promulgated by the Department of Public Safety and Corrections, Office of State Fire Marshal Code Enforcement and Building Safety, LR 35:2469 (November 2009), amended LR 36:1021 (May 2010).

§2705. Manufacturer Registration

A. General. All individuals or entities manufacturing buildings or components intended for installation in Louisiana shall be registered with the State Fire Marshal. In the event that a manufacturer has more than one facility producing industrialized buildings, the manufacturer shall obtain registration for each such facility individually.

B. Initial Registration Requirements. A manufacturer shall submit the following to the State Fire Marshal for registration:

1. a completed application for registration and a copy of a current valid contract with a third-party for inspection services;

2. description of manufacturing facility including at a minimum the size of shed(s) for weather protection of building materials and buildings under construction or repair, the size of yard at the facility for storing buildings, a site plan of the facility and a location map of the facility;

3. a quality assurance control manual in accordance with §2721;

4. appropriate fees in accordance with §2737.

C. Multiple Facilities. The manufacturer shall register each of its facility locations separately. A quality assurance control manual shall be kept at each location.

D. Renewal. The manufacturer shall renew its registration every 12 months and shall update the information required by §2705.B and submit to the State Fire Marshal. If the manufacturer does not complete the renewal information by the registration expiration date, registration becomes expired. The manufacturer must meet the qualifications in effect upon the date of renewal to have its registration renewed.

E. Change of Ownership. When the ownership of a manufacturer changes, the new owner shall within 21 days:

1. Inform the State Fire Marshal in writing of such change of ownership with an effective date.

2. Submit a completed manufacturer's application to the State Fire Marshal in accordance with §2705.

F. Change of Name and Address. In the event of a change in the name or mailing address of any manufacturer or inspection agency, the State Fire Marshal shall be notified in writing within ten days.

G. Change or Additions to a Facility. In the event of a change or an addition to a facility, the manufacturer shall revise and resubmit all items as required by §2705.B to the State Fire Marshal prior to production of any buildings, modules, or components intended for sale in Louisiana.

H. Change of Manufacturer's Third-Party Inspection Agency

1. The manufacturer shall immediately inform the State Fire Marshal in writing of any change of third-party provider. No manufacturing shall be performed and no decals shall be placed on any industrialized building, module, or modular component until an approved third-party has been retained.

2. The manufacturer shall submit to the State Fire Marshal a copy of the service agreement with the new third-party agency reflecting the effective date.

3. The new third-party agency shall review the quality control manual of the manufacturer, perform an initial plant certification inspection, and provide a plant certification report to the State Fire Marshal in accordance with §2735 of this part.

I. Termination of State Registration. In the event that a manufacturer chooses to discontinue business in Louisiana, the State Fire Marshal shall be notified in writing at least 30 days prior to the effective date. Such notice shall serve as a resignation of the registration and any subsequent resumption of business activities will require a new submittal in accordance with §2735.B of this Section.

AUTHORITY NOTE: Promulgated in accordance with R.S. 40:1730.51 through 1730.66.

HISTORICAL NOTE: Promulgated by the Department of Public Safety and Corrections, Office of State Fire Marshal Code Enforcement and Building Safety, LR 35:2469 (November 2009), amended LR 36:1022 (May 2010).

§2707. Dealer Registration

A. All individuals or entities engaged in leasing or selling industrialized buildings or components for installation in Louisiana shall be registered with the State Fire Marshal.

B. Initial Registration Requirements. A dealer shall submit the following to the State Fire Marshal for registration:

1. a completed application for registration;

2. identification of principals which shall at a minimum include the positions of partners if the dealer is a partnership or its officers, directors, controlling owners and registered agent if the dealer is a corporation;

3. description of dealer's facility including at a minimum the size of shed(s) for weather protection of building materials and buildings under repair, the size of yard at the facility for storing buildings, a site plan of the facility and a location plan of the facility;

4. appropriate fees in accordance with §2737.

C. The dealer shall submit a separate application for each separate facility location.

D. Renewal. The dealer shall renew its registration every 12 months and shall update the information provided in §2735 of this part and submit to the State Fire Marshal. If the dealer does not complete the renewal information by the registration expiration date, registration becomes expired. The dealer must meet the qualifications in effect upon the date of renewal to have its registration renewed.

AUTHORITY NOTE: Promulgated in accordance with R.S. 40:1730.51 through 1730.66.

HISTORICAL NOTE: Promulgated by the Department of Public Safety and Corrections, Office of State Fire Marshal Code Enforcement and Building Safety, LR 35:2470 (November 2009), amended LR 36:1022 (May 2010).

§2713. Design and Component Review

A. General. A plan approval of each building and modular component design shall be contingent upon compliance with the requirements of the State Fire Marshal, these rules, and the codes and standards referenced in R.S. 40:1730.56. The applicant shall submit plans and information as required by §2713.B for all new construction of buildings and renovations to existing buildings for approval by the office of State Fire Marshal in accordance with R.S. 40:1730.59 and R.S. 40:1730.66. The Office of State Fire Marshal, upon review of the plans, may request any additional information necessary to evaluate the plans submitted and shall notify the applicant of any apparent errors or omissions. Manufacturing, modifications, or alterations shall not commence until a full submittal to the State Fire Marshal has been made in accordance with this Section and a complete plan review has been performed by either an approved third-party or the State Fire Marshal. Plan approvals are valid for 180 days from the date of the review, or until notification that the applicable standards referenced

in R.S. 40:1730.56 are to be updated, modified, or changed, whichever is later.

B. Third-Party Plan Review

1. All building code plan reviews performed by a third-party must be documented in writing to the State Fire Marshal. The plan review report, as a minimum, shall contain the following information:

a. name of registered third-party inspector and council issued registration number;

b. name of manufacturer and State Fire Marshal issued registration number;

c. date of plan review;

d. the identification number, plan number, or serial number of the building or component reviewed;

e. a list of all applicable codes and editions reviewed for compliance;

f a statement indicating that information contained in the design plan submittal (pursuant to §2713.C) has been reviewed for compliance with the applicable codes;

g. a final report indicating any nonconformities observed and corrective actions required, when applicable.

2. A copy of the reviewed and approved plans shall be submitted with the plan review report to the State Fire Marshal for oversight along with any additional information required with the design plan submittal pursuant to §2713.C. Manufacturing may commence upon approval from the registered third-party; however, any additional deficiencies detected by the State Fire Marshal during the design plan submittal review shall be corrected. Decals shall not be affixed to the building or component until oversight has been performed by the State Fire Marshal.

C. Design Plan Submittal. Complete sets of design plans and specifications shall be prepared and sealed by an architect or engineer licensed to practice in the state of Louisiana when required by Louisiana law or by the State Fire Marshal. Plans shall be drawn to scale and shall be legible for reproduction purposes. Supporting calculations and any required test results shall also be provided for each building design to be reviewed. Information required with each design plan submittal shall be as indicated on the "industrialized buildings plan review checklist" as provided by the State Fire Marshal. A computerized version in an acceptable electronic format shall also be provided for each standard design. The required information for each design shall be submitted with an industrialized building plan review application, a decal request form as provided by the State Fire Marshal, and the appropriate fees as indicated in §2737 herein. The State Fire Marshal shall review the applicant's submittal and, if deficiencies are detected during the review, shall issue a plan review letter identifying the deficiencies. A revised submittal indicating corrections to these deficiencies shall be resubmitted to the State Fire Marshal within 21 days of the date of the letter for further review. Once the submittal has been determined to have no deficiencies, the State Fire Marshal shall affix a stamp to each page of the plans and the specifications cover pages reviewed. The submittal package shall be returned with a review letter indicating the limitations of the review along with the requested decals. If corrections to deficiencies are not received within 21 days of the date of the letter, the project will be found to be "not in compliance". Plan review fees for submittals found "not in compliance" are not refundable.

D. Modular Component and Modular Section Review. The applicant shall submit to the State Fire Marshal for review a modular component or modular section which may include any or all elements for use as part of a building, such as structural, mechanical, plumbing, electrical components and/or fire protection systems. Submission shall include all applicable documents and data as indicated in the "design plan submittal" above, providing complete information necessary for evaluation of the component's performance and capabilities for its intended use.

E. Fire Protection Systems Review. Life safety and property protection systems must be submitted to the State Fire Marshal for review by a life safety and property protection contractor licensed by the State Fire Marshal pursuant to §2719 herein.

F. Equivalent Methods of Compliance. In accordance with R.S. 40:1730.61, any proposed equivalent or alternative materials or methods of compliance with the referenced codes and standards, except for the Louisiana State Plumbing Code, that are not expressly prescribed therein shall be submitted to the State Fire Marshal for review. Justification for the request and supporting data shall be submitted with a "proposed equivalency to code – request for appeal" application provided by the State Fire Marshal and the appropriate review fee. If the State Fire Marshal determines, from an engineering performance standpoint, that sufficient evidence has been provided to substantiate that the proposed alternative is at least the equivalent of that prescribed by the referenced codes and standards, the State Fire Marshal may approve the use of such material or method. Such approval shall not be construed as an amendment to the technical codes and standards and shall only apply to the specific scope of work identified by a State Fire Marshal issued project number.

G. Scope of Plan Review. The scope of an industrialized building, modular component, or modular section plan review is limited to aspects of construction performed at the place of manufacture. The "industrialized building" plan review letter shall not be used to obtain a permit for site installation.

H. Site-Specific Plan Review Submittal. Industrialized buildings manufactured and decaled pursuant to §2723 herein, purchased and ready for site-specific installation, shall be submitted to the State Fire Marshal by the owner or his authorized agent for review and approval in accordance with R.S. 40:1730.66 and R.S. 40:1574, prior to obtaining a building permit from the applicable jurisdiction. The industrialized building decal number shall be provided by the owner upon submittal to the State Fire Marshal for this site-specific review.

I. Manufacturer's Modular Data Plate. The manufacturer shall install on all industrialized (modular) buildings and components, prior to leaving the manufacturing plant, a data plate which shall be permanently mounted on or about the electrical panel, if provided, or as documented on approved plans, and which shall contain, but not be limited to, the following design information when applicable.

1. manufacturer;

2. manufacturer registration number;

3. date of manufacture;

4. date of alteration, if any;

5. number of modules (decal and data plate must be installed on each module);

6. construction type;

7. occupancy use classification;

8. serial number;

9. fire marshal plan review number(s);

10. maximum floor load(s) (pounds per square foot, first floor and upper floors), live load and concentrated load;

11. roof load; live load and snow load;

12. wind velocity rating;

13. "r" value of floor, wall, and roof;

14. approved for flood zone usage (yes/no);

15. applicable codes and editions.

AUTHORITY NOTE: Promulgated in accordance with R.S. 40:1730.51 through 1730.66.

HISTORICAL NOTE: Promulgated by the Department of Public Safety and Corrections, Office of State Fire Marshal Code Enforcement and Building Safety, LR 35:2470 (November 2009), amended LR 36:1022 (May 2010).

§2715. Modifications or Alterations to Decaled Buildings

A. Any unauthorized modification, alteration, or conversion made to an industrialized building, modular component, or modular section previously approved by the State Fire Marshal shall void the decal of approval. The decal affixed to the building shall be removed in accordance with §2729 herein.

B. Pursuant to R.S. 40:1730.56(B), a change in the use of an industrialized building shall be subject to the requirements established for renovations. As such, the provisions of this Section shall apply to such buildings. The provisions of this Section shall not apply to a change in use of an industrialized building which is not accessible by the public.

C. Minor modifications to approved designs during the manufacturing process shall be submitted to the State Fire Marshal for further review and approval prior to decal placement. Major modifications shall be resubmitted for review with information as required by §2713 herein. The classification of scopes of work as minor or major modifications shall be subject to the discretion of the State Fire Marshal.

D. Modifications to existing industrialized buildings bearing a decal that are made other than at the initial manufacturing site shall be approved by the State Fire Marshal.

1. The manufacturer or dealer must provide the State Fire marshal with a set of the original approved plans of the building, revised plans reflecting the proposed modifications, a decal request form, and any additional information as required in §2713 herein. No work shall begin until the plans have been approved by the State Fire Marshal.

2. The State Fire Marshal, a third-party, or the building official for the jurisdiction in which the building is located shall be retained by the manufacturer or dealer in order to provide complete inspections during every stage of construction. Once the agency has tested and/or evaluated each system in the building and certifies to the Office of State Fire Marshal that the building is in compliance with the applicable codes, the Office of State Fire Marshal will authorize placement of an additional decal to be affixed to the building beside the original decal.

3. Pursuant to R.S. 40:1730.58(C), where the cost of the modification or alteration exceeds 50 percent of the value of the modules or modular components, the entire building shall be made to comply with the current adopted edition of the codes. Where the cost of the modification or alteration is less than 50 percent of the value of the modules or modular components, only portions of the building affected by the modification shall be required to comply with the current adopted edition of the codes.

4. A building bearing an approved decal for the recertification shall be deemed to comply with the requirements of all state adopted codes and regulations.

AUTHORITY NOTE: Promulgated in accordance with R.S. 40:1730.51 through 1730.66.

HISTORICAL NOTE: Promulgated by the Department of Public Safety and Corrections, Office of State Fire Marshal Code Enforcement and Building Safety, LR 35:2472 (November 2009), amended LR 36:1024 (May 2010).

§2717. Industrialized Buildings Constructed Prior to January 1, 2007

A. Pursuant to R.S. 40:1730.56(B), industrialized buildings constructed prior to January 1, 2007 shall meet or exceed the requirements established by the parish or municipality in which the building is to be located at the time of construction of the industrialized building. If the parish or municipality has not established requirements, compliance with the wind and flood provisions as adopted by the Louisiana State Uniform Construction Code Council shall be required as a minimum standard. Pursuant to R.S. 40:1730.64(D), the State Fire Marshal may approve previously manufactured industrialized buildings when the State Fire Marshal determines that the adopted standards of other states are reasonably consistent with those of the

building code in effect at the time of unit manufacture. The previously manufactured industrialized building shall be required to bear a data plate indicating the codes in effect at the time of unit manufacture and any other state labels that are applicable. As such, manufacturers or dealers may apply to the State Fire Marshal for decal placement on buildings that were constructed prior to January 1, 2007.

B. The following shall be required to be submitted to the State Fire Marshal for review when decals are requested:

1. a complete design plan submittal as indicated in §2713 herein;

2. documentation indicating the date of manufacture, serial number of the building, and the applicable codes and editions to which the building was manufactured;

3. documentation indicating approval under an industrialized building program of another state, if applicable;

4. data plate information;

5. the original third-party plan review letter and inspection reports documenting compliance with the codes indicated.

C. The State Fire Marshal shall review the documentation and issue a letter indicating the findings.

1. If found to comply with, as a minimum, the adopted wind and flood provisions, a unique identifiable decal as described in §2723.K herein will be issued to be affixed to the building.

2. If deficiencies are discovered during the review, the procedures indicated in §2713.C herein shall apply.

3. Any required corrections shall be inspected at the place of manufacture in accordance with §2735 herein, or shall be completely inspected by the State Fire Marshal, a third-party, or the building official for the jurisdiction in which the building is located during every stage of modification.

4. A decal disposition report shall be submitted to the State Fire Marshal per §2723 herein.

5. Where modifications are required, all inspection reports shall be submitted to the State Fire Marshal with the disposition report.

D. Site-specific installation of buildings constructed prior to January 1, 2007 that bear a decal are subject to verification by the building official for the jurisdiction in which the building is to be located that the building meets or exceeds the requirements established by the jurisdiction at the time of construction of the industrialized building, in accordance with R.S. 40:1730.56(B).

AUTHORITY NOTE: Promulgated in accordance with R.S. 40:1730.51 through 1730.66.

HISTORICAL NOTE: Promulgated by the Department of Public Safety and Corrections, Office of State Fire Marshal Code Enforcement and Building Safety, LR 35:2472 (November 2009), amended LR 36:1024 (May 2010).

§2719. Manufacture and Installation of Life Safety and Property Protection Systems

A. All life safety and property protection systems, including but not limited to, fire sprinkler, fire alarm, fire suppression, electronic locking, closed circuit television, and security systems, must be integrated, installed, certified and serviced by a life safety and property protection contractor properly licensed by the State Fire Marshal pursuant to R.S. 40:1664.1 et seq.

AUTHORITY NOTE: Promulgated in accordance with R.S. 40:1730.51 through 1730.66.

HISTORICAL NOTE: Promulgated by the Department of Public Safety and Corrections, Office of State Fire Marshal Code Enforcement and Building Safety, LR 35:2473 (November 2009), amended LR 36:1025 (May 2010).

§2721. Manufacturer's Quality Control Manual

A. The manufacturer shall maintain, at each site of manufacture of industrialized buildings, a quality control manual. The manufacturer’s quality control manual shall at a minimum contain the following information.

1. Organizational Element

a. Introduction of the Manufacturer. A brief history which shall, at a minimum, include the length of time that the manufacturer has been in the industrialized buildings industry, where it is incorporated, whether it is a division of any parent organization, the identity of products it manufactures, and the location of the facility.

b. Identification of principals and the positions of partners if the manufacturer is a partnership or its officers, directors, controlling owners and registered agent if the manufacturer is a corporation.

c. An organizational chart showing responsible management and supervisory positions by title. A job description for each of the positions shall be provided.

d. Brief qualifications of all personnel in management and supervisory positions including the quality control manager.

e. Administrative procedure for revision of quality control procedure and quality control manual.

f. Procedure for retaining permanent records of plans, travelers, inspection reports, serial numbers of buildings, decals used, first destination of labeled buildings or components.

g. Method and frequency for training of quality control and production personnel.

2. Design and specification control:

a. procedures for revisions to plans;

b. recording system of drawings and specifications.

3. Material control:

a. inspection procedure of materials, equipment and supplies when received;

b. method of storing and protection of building materials and equipment against damage;

c. provision for disposal of rejected materials, equipment and supplies;

d. forms used.

4. Production control:

a. a description of manufacturing process—method and sequence of construction;

b. check lists of material specifications and workmanship inspections performed at each stage of production by supervisors, corrective actions taken, use of traveler;

c. frequency of quality control inspections;

d. list of tests to be performed, testing equipment, results and technical data acceptable;

e. procedures for timely preventive and remedial measures;

f. assignment of authority to accept or reject work;

g. provision for disposition of rejected items;

h. forms used.

5. Finished product control and identification of products:

a. procedure for handling and storage of finished buildings/modules and components;

b. preparation for shipping, transportation, and delivery;

c. serial numbering system of buildings or components and location of the serial number not readily removable;

d. location of manufacturer's data plate. Information to contain in the data plate;

e. location of Louisiana state decal;

f. forms used.

6. A copy of the initial plant certification report in accordance with §2735 herein.

AUTHORITY NOTE: Promulgated in accordance with R.S. 40:1730.51 through 1730.66.

HISTORICAL NOTE: Promulgated by the Department of Public Safety and Corrections, Office of State Fire Marshal Code Enforcement and Building Safety, LR 35:2473 (November 2009), amended LR 36:1025 (May 2010).

§2723. Decal Application and Issuance

A. Each industrialized building, modular section and modular component approved by the State Fire Marshal shall be affixed with a Louisiana State Fire Marshal industrialized building decal after favorable plan review and inspection in accordance with §2713 and §2735 herein. The decal shall indicate acceptance of construction approved by the design plan review and inspected at a place other than at the site of installation.

B.1. The manufacturer or dealer shall file with the Sate Fire Marshal a decal disposition report no later than the tenth day of the following month for the preceding month's activity, until all decals in the possession of the manufacturer or dealer have been affixed and are accounted for. The disposition report shall be filed on a form provided by the State Fire Marshal and shall contain, as a minimum, the following information:

a. the State Fire Marshal issued decal number for each unit manufactured or modified;

b. the State Fire Marshal issued plan review number for the building or component;

c. the identification number or serial number of the building or component;

d. the date(s) of inspection; and

e. the date of decal placement.

2. Inspection reports as required by §2715, §2717, or §2735 herein shall accompany each disposition report.

C. The control of the decals shall remain with the Office of State Fire Marshal and will be revoked by the State Fire Marshal in the event of violation of the conditions of approval. All such voided decals shall be returned to the Office of State Fire Marshal.

D. Decals shall be obtained utilizing a request form provided by the State Fire Marshal. One request form shall accompany each industrialized building plan review application required with each design submitted for review in accordance with §2713 herein and shall indicate the number of modules intended to be manufactured for the design submitted.

E. Upon design plan submittal approval, decals shall be provided as requested to the manufacturer or dealer. Additional decals may be ordered at any time after the initial plan review and approval has been completed. The plan review project number issued by the State Fire Marshal for a specific design shall be indicated on the decal(s) issued.

F. The third-party, the manufacturer's quality assurance person, or the State Fire Marshal shall affix the decals to the corresponding approved buildings only after inspection in accordance with §2715, §2717, or §2735 herein and determination that the building or component is in compliance with the approved design plan submittal and State Fire Marshal requirements.

G. Assigned decals are not transferable from one building to another or from one manufacturer or dealer to another manufacturer or dealer. Decals issued with each design plan submittal approval shall only be placed on the corresponding approved building or component. Decals not used within three years of issuance shall be returned to the State Fire Marshal.

H. After a decal has been affixed to a building or component, alterations may be made only in accordance with §2715 herein.

I. Decals shall not be affixed to an industrialized building, modular section or modular component which has deficiencies or does not conform to the approved plans.

Violation of this section shall be subject to the penalties and fines indicated in §2729 herein.

J. Construction Site Building. Pursuant to R.S. 40:1730.63(B), buildings that are manufactured only for use as temporary construction site buildings shall be exempt from these decal provisions.

K. Industrialized Buildings Constructed Prior to January 1, 2007. Decals issued pursuant to §2717 herein shall have a unique color, shape, or markings.

AUTHORITY NOTE: Promulgated in accordance with R.S. 40:1730.51 through 1730.66.

HISTORICAL NOTE: Promulgated by the Department of Public Safety and Corrections, Office of State Fire Marshal Code Enforcement and Building Safety, LR 35:2474 (November 2009), amended LR 36:1026 (May 2010).

§2725. Transportation and Installation

A. Manufacturer shall provide a transportation and installation booklet with each new building and component package. It shall include:

1. precautions and instructions for transportation of buildings and modules;

2. installation instructions;

3. notice that a site-specific plan review submittal is required to be submitted to the State Fire Marshal in accordance with §2713(H) of this part prior to obtaining a building permit from the applicable jurisdiction.

4. Notice that inspections by the State Fire Marshal are required prior to occupancy.

B. Dealer shall ensure that the transportation and installation booklet is provided with each building and component package.

AUTHORITY NOTE: Promulgated in accordance with R.S. 40:1730.51 through 1730.66.

HISTORICAL NOTE: Promulgated by the Department of Public Safety and Corrections, Office of State Fire Marshal Code Enforcement and Building Safety, LR 36:1026 (May 2010).

§2729. Removal of Decals, Penalties and Fines Imposed

A. The State Fire Marshal, upon notice that a building, module, or modular component bearing a decal is in violation, shall furnish the building manufacturer or dealer in possession of the decal with a written notice of such violations.

1. The manufacturer or dealer shall respond within 21 days of such notice with a plan of correction. If modifications are required to bring the building or component into compliance, the provisions of §2715 herein shall apply.

2. The State Fire Marshal or his authorized agent, the manufacturer, or the dealer shall remove the decal from the building, module, or modular component found to be in violation within 21 days of the notice and shall return the decal to the State Fire Marshal.

3. Decals for previously issued units of the same design also determined to be in violation shall be deemed void and shall also be returned to the State Fire Marshal.

4. Applications for decals for new units by a manufacturer previously determined to be in violation will be denied until the plan of correction has been approved and compliance has been verified.

5. A fine not to exceed two hundred dollars per day for each day over 21 days may be levied until such decals have been returned to the State Fire Marshal, pursuant to 40:1563.4.

B. Any manufacturer, dealer, or third-party found to repetitively violate these rules, applicable laws or codes of the state of Louisiana shall be grounds for revoking registration of the manufacturer or dealer and recommendation to revoke registration of the responsible third-party. Three written notices of violations issued within a three year period to a manufacturer, dealer, or third-party shall be considered repetitive.

AUTHORITY NOTE: Promulgated in accordance with R.S. 40:1730.51 through 1730.66.

HISTORICAL NOTE: Promulgated by the Department of Public Safety and Corrections, Office of State Fire Marshal Code Enforcement and Building Safety, LR 35:2474 (November 2009), amended LR 36:1026 (May 2010).

§2735. Inspections; Inspection Reports

A. Responsibilities of third-party inspectors. Each third-party inspector retained by a registered manufacturer shall discharge the following responsibilities:

1. performing an initial plant certification inspection;

2. monitoring of the quality assurance procedures at the site of manufacture;

3. verifying that industrialized buildings, modules and modular components have been manufactured pursuant to State Fire Marshal approved building system documentation and in accordance with the approved quality assurance procedures;

4. authorizing the attachment of decals to such industrialized buildings, modules and modular components;

5. preparation of all reports as may be required by this Chapter.

B. Initial Plant Certification Inspection

1. No decal shall be affixed to any industrialized building, module or modular component until the third-party inspector has completed an initial plant certification inspection of the manufacturer's facility, unless in accordance with §2735.F herein.

2. The initial plant certification inspection shall consist of a complete evaluation of the manufacturer's adherence to its quality assurance procedures and capability of producing an industrialized building, module or modular component, in accordance with the approved building system.

3. The third-party shall become familiar with every aspect of the manufacturer's approved building system and quality assurance procedures.

4. The third-party shall make a complete inspection of the manufacture of at least one industrialized building and any module or modular component pertaining to that particular building throughout all of the operation in the facility. If the first building inspected or any component pertaining to that particular unit fails to conform to the standards, additional buildings and component shall be similarly inspected until the inspector is satisfied that the manufacturer is complying with the approved building system and the building code.

C. Plant Certification Report. If, on the basis of the initial plant certification inspection, the third-party determines that the manufacturer is in compliance with its approved quality assurance procedures, the third-party shall prepare and forward to the State Fire Marshal a certification report. The certification report shall include:

1. the name, address, and State Fire Marshal registration number of the manufacturing facility;

2. the name(s) of the third-party inspector(s) that approved the manufacturer's building system and quality assurance procedures, and the dates of approval;

3. the name(s) of the third-party inspector(s) that performed the initial plant certification inspection;

4. the serial numbers and the State Fire Marshal project number(s) assigned to the industrialized buildings, modules or modular components inspected;

5. a full report of all inspections conducted, any nonconformity observed, and corrective actions taken;

6. the date of certification.

D.1. Inspection Reports. Third-party inspectors shall inspect construction throughout the manufacturing process and shall document their findings in writing to the State Fire Marshal. The inspection report, as a minimum, shall contain the following information:

a. name of registered third-party inspector and council issued registration number;

b. name of manufacturer and State Fire Marshal issued registration number;

c. date of inspection;

d. the State Fire Marshal issued plan review number of each building or component inspected;

e. the identification number or serial number of each building or component inspected;

f. a full report of all inspections conducted, any nonconformity observed, and corrective actions taken.

g. a statement indicating that the construction is in accordance with the stamped set of State Fire Marshal approved plans;

h. a statement indicating that the actual inspection was performed at the manufacturer's facility as registered with the State Fire Marshal.

2. The inspecting agency shall keep a copy of all inspection reports for a minimum of five years.

E. Frequency of Inspections

1. After initial plant certification, the third-party inspector shall inspect:

a. each industrialized building, module, or modular component in at least one stage of construction;

b. every stage of construction during the course of each inspection visit to a manufacturing facility.

2. The third-party shall conduct unannounced inspections at the manufacturing site to review any aspects of the manufacturing process.

3. Nothing in this Paragraph shall preclude a third-party from conducting inspections at a greater frequency than the minimum prescribed herein if, in the inspector's professional judgment, such action is necessary to discharge its responsibilities properly.

F. The State Fire Marshal may temporarily waive compliance with the quality assurance manual at the request of the manufacturer. Upon the grant of such waiver, the manufacturer shall have each industrialized building and any module or modular component which it produces completely inspected during every stage of construction by a third-party inspector.

AUTHORITY NOTE: Promulgated in accordance with R.S. 40:1730.51 through 1730.66.

HISTORICAL NOTE: Promulgated by the Department of Public Safety and Corrections, Office of State Fire Marshal Code Enforcement and Building Safety, LR 35:2475 (November 2009), amended LR 36:1027 (May 2010).

§2737. Fees

A. In accordance with R.S. 40:1730.67, a manufacturer or dealer of industrialized buildings who conducts business in the state of Louisiana shall pay to the office of State Fire Marshal, code enforcement and building safety service fees based on the following schedule:

1. Manufacturer registration—$350 per year, per each location.

2. Dealer registration—$250 per year, per each location.

3. Plan Review

a. The fee for review of plans and specifications of new and renovated industrialized buildings, modules and modular components by the Office of State Fire Marshal shall be in accordance with the following schedule. The fee applies to the primary occupancy class of the building, but includes square footage for the total building, even where composed of separate occupancy classes, incidental uses or accessory uses. For each standard design, a separate fee will be applied to each primary occupancy class utilizing that design. Review fees for fire protection and all other systems

are separate and shall be as indicated on the plan review fee computation schedules as provided by the State Fire Marshal.

Occupancy	Square Footage	Review Fee
ASSEMBLY Groups A-1, A-2, A-3, A-4, A-5	0 - 2500	= $335.00
	2,501 - 4,500	= $505.00
	4,501 - 10,000	= $1,220.00
	10,001 - 50,000	= $1,806.00
	50,001 - 100,000	= $2,365.00
	100,001 and over	= $2,515.00 + .01/sq ft over 100,000 sq ft
EDUCATIONAL or DAYCARE Groups E, I-4	0 - 5,000	= $335.00
	5,001 - 10,000	= $505.00
	10,001 - 30,000	= $740.00
	30,001 - 80,000	= $1,330.00
	80,001 - 150,000	= $1,920.00
	150,001 and over	= $2,020.00 + .01/sq ft over 150,000 sq ft
HEALTH CARE, INSTITUTIONAL, or DETENTION (Includes Limited Care/Assisted Living facilities) Groups I-2, I-3	0-2,000	= $485.00
	2,001-5,000	= $715.00
	5,001-10,000	= $970.00
	10,001-20,000	= $1,320.00
	20,001-30,000	= $1,420.00
	30,001-50,000	= $2,400.00
	50,001-100,000	= $2,990.00
	100,001 and over	= $3,190.00 + .02/sq ft over 100,000 sq ft
HOTELS, DORMITORIES, APARTMENTS, LODGING or ROOMING HOUSES, RESIDENTIAL BOARD AND CARE FACILITIES Groups R-1, R-2, R-3, R-4, I-1	0-2,500	= $335.00
	2,501-10,000	= $505.00
	10,001-30,000	= $1,220.00
	30,001-80,000	= $1,810.00
	80,001-150,000	= $2,400.00
	150,001 and over	= $2,500.00 + .01/sq ft over 150,000 sq ft
BUSINESS or MERCANTILE Groups M, B	0-3,000	= $335.00
	3,001-10,000	= $505.00
	10,001-30,000	= $695.00
	30,001-50,000	= $1,035.00
	50,001-150,000	= $1,330.00
	150,001 and over	= $1,430.00 + .01/sq ft over 150,000 sq ft
INDUSTRIAL or STORAGE Groups F-1, F-2, S-1, S-2, U	0-10,000	= $335.00
	10,001-20,000	= $505.00
	20,001-50,000	= $695.00
	50,001-100,000	= $865.00
	100,001 and over	= $945.00 + .01/sq ft over 100,000 sq ft
HIGH HAZARD Groups H-1, H-2, H-3, H-4, H-5	0-2,000	= $495.00
	2,001 and over	= $495.00 + .30/sq ft over 2,000 sq ft

4. Code Equivalency review—$100 per review.

5. Inspections—$40 per hour, including travel time.

6. Decal or insignia issuance:

a. Modules—$ 00.07 per square foot of floor area, with a minimum fee of $25.00.

b. Modular Components—$ 00.02 per square foot of surface area, with a minimum fee of $00.60.

AUTHORITY NOTE: Promulgated in accordance with R.S. 40:1730.51 through 1730.66.

HISTORICAL NOTE: Promulgated by the Department of Public Safety and Corrections, Office of State Fire Marshal Code Enforcement and Building Safety, LR 36:1028 (May 2010).

Chapter 29. Emergency Elevator Access

§2901. Master Elevator Keys

A. Each lock for all elevators in this state that permits public access must be keyed for operation by one master elevator key as required in these rules. The purpose of these rules is to allow all elevators within the state to be operated by firefighters and emergency responders in the event of an emergency.

AUTHORITY NOTE: Promulgated in accordance with R.S. 40:1582.

HISTORICAL NOTE: Promulgated by the Department of Public Safety and Corrections, Office of State Fire Marshal Code Enforcement and Building Safety, LR 35:2466 (November 2009).

§2903. Statewide Access

A. Emergency elevator access shall be provided for each elevator that allows public access including, but not limited to, public elevators, service elevators, and freight elevators, in each of the following buildings in this state:

1 each building which is six or more stories in height, including, but not limited to, hotels and condominiums;

2. any building in this state which is six or more stories in height that has undergone substantial renovation after January 1, 2009.

AUTHORITY NOTE; Promulgated in accordance with R.S. 40:1582.

HISTORICAL NOTE: Promulgated by the Department of Public Safety and Corrections, Office of State Fire Marshal Code Enforcement and Building Safety, LR 35:2466 (November 2009).

§2905. Requirements for Master Elevator Keys

A. All elevator keys within the state as set forth in these rules shall be uniform and specific for the state of Louisiana. All elevator keys will be cut to a uniform key code, specified as “LA-UEK”.

B. Master elevator keys must be a patent protected design to prevent unauthorized duplication.

C. All elevator keys will be factory restricted (no uncut key blanks are to leave the factory) by the manufacturer to prevent the unauthorized distribution of key blanks.

D. Keys will feature angled cuts at varying depths to work in conjunction with elevating and rotating security pins in the corresponding locking device. Keys will also incorporate an additional side cut to operate a corresponding sliding element in the locking device.

AUTHORITY NOTE: Promulgated in accordance with R.S. 40:1582.

HISTORICAL NOTE: Promulgated by the Department of Public Safety and Corrections, Office of State Fire Marshal Code Enforcement and Building Safety, LR 35:2466 (November 2009).

§2907. Access to Master Elevator Keys

A. Master elevator keys shall be made available only to:

1. elevator owners or their authorized agents;

2. elevator contractors licensed by the state of Louisiana;

3. Louisiana state certified inspectors;

4. state agency representatives authorized by the Office of State Fire Marshal;

5 the fire chief or his designee of the fire department in whose jurisdiction the building is located.

B. Information pertaining to obtaining elevator keys is available at www.lasfm.org

AUTHORITY NOTE: Promulgated in accordance with R.S. 40:1582.

HISTORICAL NOTE: Promulgated by the Department of Public Safety and Corrections, Office of State Fire Marshal Code Enforcement and Building Safety, LR 35:2466 (November 2009).

§2909. Duplication of Elevator Keys Prohibited

A. No person may duplicate a Master Elevator Key.

B. All elevator keys subject to these rules are to be coined with "RESTRICTED—DO NOT DUPLICATE".

AUTHORITY NOTE: Promulgated in accordance with R.S. 40:1582.

HISTORICAL NOTE: Promulgated by the Department of Public Safety and Corrections, Office of State Fire Marshal Code Enforcement and Building Safety, LR 35:2466 (November 2009).

§2911. Obtaining Elevator Keys

A. Persons authorized under this rule to possess a master elevator key shall apply to an authorized vendor using a master elevator key order form for the issuance of such key. The master elevator key order form may be obtained by visiting the Office of State Fire Marshal website located at www.lasfm.org.

B. Applicants must send the completed form to the authorized vendor or vendors by mail, fax, or email. Once the authorized vendor or vendors receives the completed form, keys will be provided.

C. Authorized vendors will maintain copies of master elevator key order forms for verification on all subsequent orders. Applicants only need to submit forms on the first order.

AUTHORITY NOTE: Promulgated in accordance with R.S. 40:1582.

HISTORICAL NOTE: Promulgated by the Department of Public Safety and Corrections, Office of State Fire Marshal Code Enforcement and Building Safety, LR 35:2466 (November 2009).

§2913. Equivalency for Existing Buildings; Locking Cabinets; Lock Boxes

A. The following equivalency applies only to existing buildings constructed before January 1, 2009.

B. If the local certified fire prevention bureau determines that it is technically, financially, or physically impossible to bring a building's elevators into compliance with this rule, the local certified fire prevention bureau may accept as an alternative the installation of an approved high security locking cabinet. The locking cabinet must be keyed with a single, jurisdiction specific, non-duplicable keyed rapid entry system and be UL 1037 listed. The locking cabinet shall be installed in accordance with this section.

C. The local certified fire prevention bureau's decision regarding the alternative measure may be appealed by the building owner to the State Fire Marshal whose decision shall constitute final agency action for purposes of Louisiana Statutes. An appeal may be instituted by the appellant writing a letter to the Office of State Fire Marshal, 8181 Independence Blvd., Baton Rouge, LA 70806.

D. Installation of Locking Cabinets

1. The locking cabinet is permitted to be installed surface or recess-mounted.

2. The locking cabinet's front cover shall be hinged on the right side and shall be permanently labeled with the words "Fire Department Use Only—Elevator keys."

3. The locking cabinet shall be mounted at each elevator bank at the lobby nearest to the lowest level of fire department access.

4. Locking cabinets are required to be mounted 5'6" above the finished floor to the right side of the elevator bank.

5. Contents of the locking cabinet are limited to the master elevator key, additional elevator access tools and/or keys and information pertinent to emergency planning or elevator access as deemed necessary by the local fire department having jurisdiction.

E. Multiple Elevator Banks

1. In buildings subject to these alternative provisions which house two or more different elevator banks, a single, approved locking cabinet may be used when such banks are separated by not more than 30 feet.

2. In the buildings specified in Subsection A with elevators or elevator banks separated by more than 30 feet, separate approved locking cabinets must be used for each individual elevator or elevator bank so separated.

3. In situations of multiple elevators or elevator banks or in situations of space constrictions or content needs, the local certified fire prevention bureau may approve use of a high security, lock box or cabinet where it is deemed necessary. The approved lock box or cabinet must utilize the same single, jurisdiction specific, non-duplicable keyed rapid entry system as the locking cabinet and be UL 1037 listed. Lock boxes or cabinets are to be mounted in

accordance with the above outlined specifications for locking cabinets.

F. Owner shall provide one key for the lock box or cabinet if it exists and provide up to two keys to the local fire department.

AUTHORITY NOTE: Promulgated in accordance with R.S. 40:1582.
HISTORICAL NOTE: Promulgated by the Department of Public Safety and Corrections, Office of State Fire Marshal Code Enforcement and Building Safety, LR 35:2467 (November 2009).

§2915. Administrative Fine; Penalty

A. Any person, business, or entity failing to comply with any provision of these rules shall be subject to an administrative fine of not more than one thousand dollars, in addition to any other penalty provided by law.

AUTHORITY NOTE: Promulgated in accordance with R.S. 40:1582.
HISTORICAL NOTE: Promulgated by the Department of Public Safety and Corrections, Office of State Fire Marshal Code Enforcement and Building Safety, LR 35:2467 (November 2009).

Chapter 30. Portable Fire Extinguishers, Fire Hoses, Hydrostatic Testing, Fixed Fire Suppression Equipment and/or Systems and Fire Detection and Alarm Equipment and/or Systems Rules

§3001. Purpose

A. The purpose of these rules is to regulate the activity of certifying, inspecting, installing, maintaining and servicing of portable fire extinguishers and fire hoses and/or the certifying, inspecting, installing, integrating, maintaining or servicing of fixed fire suppression equipment and/or systems or fire detection and alarm equipment and/or systems and/or hydrostatic testing Department of Transportation (DOT) fire protection cylinders in the interest of protecting and preserving lives and property pursuant to authority of R.S. 40:1664.1 et seq.

AUTHORITY NOTE: Promulgated in accordance with R.S. 40:1664.2.
HISTORICAL NOTE: Promulgated by the Department of Public Safety and Corrections, Office of State Fire Marshal, LR 17:273 (March 1991), amended LR 26:1324 (June 2000), LR 33:1665 (August 2007).

§3003. Applicability of Rules

A. These rules shall apply to all firms and persons engaged in the activity of certifying, inspecting, installing, maintaining and servicing of portable fire extinguishers and fire hoses and/or the certifying, inspecting, installing, integrating, maintaining or servicing of fixed fire suppression equipment and/or systems or fire detection and alarm equipment and/or systems and/or hydrostatic testing of DOT fire protection cylinders.

AUTHORITY NOTE: Promulgated in accordance with R.S. 40:1664.2.
HISTORICAL NOTE: Promulgated by the Department of Public Safety and Corrections, Office of State Fire Marshal, LR 17:273 (March 1991), amended LR 26:1324 (June 2000), LR 33:1665 (August 2007).

§3005. Exceptions

A. These rules shall not apply to the following:

1. firms and/or persons engaging in the activity of certifying, inspecting, installing, integrating, or servicing fire detection and alarm equipment and/or systems in one or two family dwellings;

2. the servicing by industrial facilities and fire departments of their own portable fire extinguishers by their own employees specially trained to perform such.

AUTHORITY NOTE: Promulgated in accordance with R.S. 40:1664.2.
HISTORICAL NOTE: Promulgated by the Department of Public Safety and Corrections, Office of State Fire Marshal, LR 17:273 (March 1991), amended LR 26:1324 (June 2000), LR 33:1665 (August 2007).

§3007. Notices by the Fire Marshal

A. Any notice required to be given by the State Fire Marshal by any provision of R.S. 40:1664.1 et seq., or these rules must be given by personal or domiciliary service or mailed, postage prepaid, to the person's residence or firm address as it appears on the records in the Office of State Fire Marshal. It is the responsibility of the person or firm involved to assure that the Office of State Fire Marshal has a correct address for the person or firm.

AUTHORITY NOTE: Promulgated in accordance with R.S. 40:1664.2.
HISTORICAL NOTE: Promulgated by the Department of Public Safety and Corrections, Office of State Fire Marshal, LR 17:273 (March 1991), amended by LR 26:1324 (June 2000), LR 33:1665 (August 2007).

§3009. Certificate, License Required

A. Each firm engaged in the activity of certifying, inspecting, installing, maintaining or servicing portable fire extinguishers or fire hoses or certifying, inspecting, installing, integrating, maintaining or servicing fixed fire suppression equipment and/or systems or fire detection and alarm equipment and/or systems or performing hydrostatic testing on DOT fire protection cylinders shall apply for a certificate of registration in the endorsements of certification desired in accordance with these rules prior to conducting any such activity in this state.

B. Each person or employee, including apprentices, engaged in the activity of inspecting, installing, servicing portable fire extinguishers or fire hoses or certifying, inspecting, installing, integrating, or servicing fixed fire suppression equipment and/or systems or fire detection and alarm equipment and/or systems or performing hydrostatic testing on DOT fire protection cylinders shall apply for a license in the endorsements of licensure desired in accordance with these rules prior to conducting any such activity in this state.

C. Any firm and/or person described in A or B of this section, which has not applied for and received a current and

valid certificate of registration or license, shall immediately cease such activities. The Office of State Fire Marshal may take all steps necessary to enforce an order to cease and desist.

AUTHORITY NOTE: Promulgated in accordance with R.S. 40:1664.2.

HISTORICAL NOTE: Promulgated by the Department of Public Safety and Corrections, Office of State Fire Marshal, LR 17:273 (March 1991), amended LR 26:1325 (June 2000), LR 33:1665 (August 2007).

§3011. Definitions

A. The following words and terms, when used in these rules, shall have the following meanings, unless the context clearly indicates otherwise.

Activity—the inspecting, installing, maintaining and servicing of portable fire extinguishers and fire hoses and the certifying, inspecting, installing, integrating, maintaining or servicing of fixed fire suppression or fire detection and alarm equipment and/or systems and/or engaging in hydrostatic testing of DOT fire protection cylinders pursuant to R.S.40:1664.1 et seq.

Apprentice—a person who is licensed to work under the direct supervision and accompaniment of a technician who is licensed to the same firm and holding a valid license to perform the same acts.

Certificate of Registration—that document issued by the State Fire Marshal to a firm authorizing it to engage in such activities as defined in these rules.

Certify—to attest to the proper charging, or filling, or functionality, or hydrostatic testing, or inspection, or installation, or integration, or maintenance, or recharging, or refilling, or repair, or service, or testing of portable fire extinguishers, fire hoses, DOT fire protection cylinders, fixed fire suppression and/or fire detection and alarm equipment and/or systems in accordance with all applicable engineered specifications, manufacturer's specifications and per the inspection, testing and maintenance chapters as set forth in the applicable NFPA codes and standards.

Contact Person—that individual designated by a firm to act as liaison with the Office of State Fire Marshal.

Department of Transportation (DOT) Fire Protection Cylinder—all portable fire extinguisher or fixed fire suppression system cylinders manufactured and tested in compliance with specifications and requirements of the United States Department of Transportation.

Employee—one who works for a "firm", as defined by R.S.40:1664.3, in return for financial or other compensation. The term shall include the following:

a. for the purposes of the licensing requirements contained in R.S. 40:1664.4, employees shall not include secretaries, drivers, accounting personnel, or persons who sell portable fire extinguishers or single station smoke/fire detectors;

b. for the purposes of licensing requirements, the firm owner or owners shall be considered an "employee" if he or she is or will be physically certifying, inspecting, installing, maintaining or servicing portable fire extinguishers or certifying, inspecting, installing, integrating, maintaining or servicing fixed fire suppression systems and/or equipment or in certifying, inspecting, installing, integrating, maintaining or servicing fire detection and alarm systems and/or equipment or performing hydrostatic testing on DOT fire protection cylinders or fire hoses.

Engineered Fixed Fire Suppression Systems—special systems individually designed or altered in accordance with nationally recognized fire protection system design standards and manufacturer's guidelines.

Fire Alarm Endorsement—that document issued by the State Fire Marshal that authorizes a firm or person to engage in the certifying, inspecting, installing, integration, maintaining and servicing of fire detection and alarm systems and those activities specifically authorized by a Non-Required Systems endorsement.

Fire Alarm Non-Required Systems Endorsement—that document issued by the State Fire Marshal that authorizes a firm or person to engage in the activity of certifying, inspecting, installing, integration, maintaining and servicing of fire detection and alarm systems in structures or occupancies which are not required by NFPA 101 to be protected by an approved fire alarm and detection system.

Fire Alarm Owner Endorsement—that document issued by the State Fire Marshal that authorizes an owner of a fire alarm system or his employee to perform routine inspection, and minor service and repairs of fire detection and alarm systems within the owner's own facilities only. No installing, integration, or certifying of these systems is permitted. Minor service and repair is defined as repair/replacement of single initiating and/or annunciating devices with identical new devices. No service within the alarm control panel shall be permitted except that the exchanging of system batteries with identical new ones is permitted. Routine inspection is defined as visual inspections and monthly drill tests.

Fire Detection and Alarm Systems—those assemblies of wiring, electronic transmitting devices, detection devices, and related equipment for the detection of products of combustion or flammable gases, heat and smoke and for alerting occupants and fire department personnel of a fire emergency.

Fire Hose—a flexible conduit used to convey water.

Fire Protection Equipment/Systems—as governed by R.S. 40:1664.1 et seq., includes any equipment/system relating to portable fire extinguishers, fixed fire suppression systems (pre-engineered or engineered) and/or fire detection and alarm systems.

Firm—a sole proprietorship, partnership, corporation, limited Liability Company or any other entity.

Fixed Fire Suppression System Endorsement—that document issued by the State Fire Marshal that authorizes a firm or person to engage in the certifying inspecting, installing, integration, maintaining and servicing of engineered or pre-engineered fixed fire suppression systems.

Please note: Hydrostatic testing of fixed fire suppression cylinders required by the U.S. DOT requires a Hydrostatic Testing Endorsement.

Hydrostatic Testing—pressure testing fire protection cylinders or fire hoses by approved hydrostatic methods and in accordance with NFPA codes and/or the U.S. Department of Transportation.

Hydrostatic Testing Endorsement—that document issued by the State Fire Marshal that authorizes a firm or person to engage in hydrostatic testing of fire protection cylinders manufactured in accordance with the specification and procedure of the United States Department of Transportation. A Hydrostatic Testing Endorsement is only valid if the firm or person also has a Portable Fire Extinguisher/Fire Hose Endorsement for testing DOT fire extinguisher cylinders and either a Fixed Fire Suppression System, Pre-Engineered Fixed Fire Suppression System or Kitchen Fixed Fire Suppression endorsement for testing DOT fixed fire suppression cylinders as well.

Inspection—a visual examination of a system or portion thereof to verify that it appears to be in operating condition and is free of physical damage. It does not include "quick checks" required every 30 days of portable fire extinguishers.

Installation—the initial placement of a portable fire extinguisher, fixed fire suppression equipment and/or systems, fire detection and alarm equipment and/or systems or an extension, or alteration after initial placement.

Integration—the act of utilizing accepted and approved fire protection systems and/or equipment and components in accordance with manufacturers' direction to develop a unified and functioning system meeting applicable NFPA codes and standards.

Kitchen Fixed Fire Suppression System—those specific fire suppressions systems designed to protect appliances within commercial cooking operations.

Kitchen Fixed Fire Suppression System Endorsement—that document issued by the State Fire Marshal that authorizes a firm or person to engage in the activity of certifying, inspecting, installing, integration, maintaining or servicing pre-engineered fixed fire suppression systems containing wet or dry chemical agents within a kitchen ventilation system.

Please Note: Hydrostatic testing of fixed fire suppression cylinders required by the U.S. DOT requires a Hydrostatic Testing Endorsement.

License—that document issued by the State Fire Marshal to an employee of a certified firm authorizing the employee to engage in the activities as defined by these rules.

Maintenance—work, including, but not limited to repair, replacement, and service, performed to ensure that equipment operates properly. For portable fire extinguishers, it includes a thorough examination for physical damage or condition to prevent its operation and any necessary repair or replacement.

Nationally Recognized Testing Laboratory—a nationally recognized testing company concerned with product and service evaluation, which, after conducting successful examinations, inspections, tests and reexaminations, reflects approval by various labeling, listing and classification actions.

NFPA—the National Fire Protection Association, Inc., a nationally recognized standards-making organization.

Non-Conforming—a system or component of a system which does not comply with applicable NFPA codes or standards.

Non-Required—a system or component of a system which is not required by the applicable occupancy chapter of NFPA 101 (Life Safety Code).

Office—Office of State Fire Marshal.

Operating Location—a physical office which houses employees and business documents or records and from which the acts authorized by the certificate of registration are performed.

Person—a natural individual, including any owner, manager, officer, or employee of any firm.

Pocket License—that document issued by the State Fire Marshal to an employee of a certified firm, in pocket size and bearing a photographic image of the licensee, authorizing the employee to engage in the activities as defined by these rules.

Pre-Engineered Fixed Fire Suppression Systems—packaged systems which consist of system components designed to be installed according to pretested limitations as approved or listed by a testing laboratory. Pre-engineered systems may incorporate special nozzles, flow rates, methods of application, nozzle placement and pressurization levels, which may differ from those detailed elsewhere in NFPA. Pre-engineered systems shall be installed to protect hazards within the limitations that have been established by the testing laboratories where listed.

Pre-Engineered Fixed Fire Suppression Endorsement—that document issued by the State Fire Marshal that authorizes a firm or person to engage in the activity of certifying, inspecting, installing, integration, maintaining or servicing pre-engineered fixed fire suppression systems and those activities specifically authorized by a Kitchen Suppression Endorsement.

Please Note: Hydrostatic testing of fixed fire suppression cylinders required by the U.S. DOT requires a Hydrostatic Testing Endorsement.

Portable Fire Extinguisher—a portable device containing a suppression agent that can be expelled under pressure for the purpose of suppressing or extinguishing a fire and shall include semi-portable fire extinguishers.

Portable Fire Extinguisher/Fire Hose Endorsement—that document issued by the State Fire Marshal that authorizes a firm or person to engage in the activity of certifying, inspecting, installing, maintaining or servicing portable fire extinguishers and fire hoses and hydrostatic

testing of portable fire extinguisher cylinders not required by the U.S. Department of Transportation (U.S. DOT).

Please Note: Hydrostatic testing required by the U.S. DOT requires a Hydrostatic Testing Endorsement.

Qualifying Person—the employee of a firm who currently meets the certification, examination and/or training requirements set for each endorsement by the Life Safety and Property Protection Advisory Board.

Recharge—the replacement of the suppression agent, the expellant or both.

Required—a system or component of a system which is required by the applicable occupancy chapter of NFPA 101 (Life Safety Code).

Semi-Portable—any portable fire extinguisher mounted on skids or wheels.

Service—the act of repair or replacement of fire protection equipment/systems to ensure the proper functioning of the equipment/system.

Shop—a facility of a certified firm where certifying, inspecting, integrating, maintaining, pre-assembling, servicing, repairing or hydrostatic testing is performed and where firm records, parts and equipment are maintained.

AUTHORITY NOTE: Promulgated in accordance with R.S. 40:1664.2.

HISTORICAL NOTE: Promulgated by the Department of Public Safety and Corrections, Office of State Fire Marshal, LR 17:273 (March 1991), amended LR 17:972 (October 1991), LR 26:1325 (June 2000), LR 33:1666 (August 2007).

§3013. Certificates of Registration

A. Every firm must obtain from the State Fire Marshal a certification of registration with the appropriate endorsements as provided for by R.S.40:1664.1 et seq., before engaging in the activity of certifying, inspecting, installing, maintaining or servicing portable fire extinguishers or fire hoses or certifying, inspecting, installing, integrating, maintaining or servicing fixed fire suppression systems or fire detection and alarm systems and/or engaging in hydrostatic testing of DOT fire protection cylinders.

1. Each firm, as defined by R.S.40:1664.3 et seq., shall have at least one licensed technician per endorsement of certification to perform the act or acts authorized by its certificate.

2. Firms as defined by R.S.40:1664.3 et seq., and their owners shall be responsible for the acts of their agents and employees for the purpose of these rules including the initiation of administrative action by the state fire marshal.

B. The following shall apply to certificates of registration.

1. Posting. Each certificate shall be posted conspicuously at each firm and/or branch office premises. All firms without a physical location in this state shall be required to purchase a duplicate certificate to post in each vehicle which will come into this state to do work.

2. Changes of Ownership. The change of a firm's majority ownership invalidates the current certificate. To assure continuance of the firm, an application for a new certificate shall be submitted to the State Fire Marshal within 10 days after such change in ownership.

3. Change of Corporate Officers. Any change of corporate officers must be reported in writing to the State Fire Marshal within 10 days of the change, and does not require a revised certificate.

4. Duplicates. A duplicate certificate must be obtained from the State Fire Marshal to replace a lost or destroyed certificate. The certificate holder must submit written notification of the loss or destruction within 10 days, accompanied by the required fee specified in these rules.

5. Revisions/Changes. The change of a firm's name, location, or mailing address or operating status requires a revision of the certificate of registration. Certificates of registration requiring changes must be surrendered to the State Fire Marshal within 10 days after the change requiring the revision. The certificate of registration holder must submit written notification of the change with the surrendered certificate of registration, accompanied by the required fee specified by R.S. 40:1664.1 et seq.

6. Non-Transferability. A certificate of registration is not transferable from one firm to another.

7. Validity. A certificate of registration is valid for one year from date of issue, and must be renewed annually unless the State Fire Marshal adopts a system under which certificates expire on various dates during the year. Should a staggered renewal system be adopted, the renewal fees shall be prorated on a monthly basis so that each registrant pays only that portion of the fee that is allocable to the number of months during which the certificate is valid.

AUTHORITY NOTE: Promulgated in accordance with R.S. 40:1664.2.

HISTORICAL NOTE: Promulgated by the Department of Public Safety and Corrections, Office of State Fire Marshal, LR 17:273 (March 1991), amended LR 26:1327 (June 2000), LR 33:1668 (August 2007).

§3015. Licensure

A. Required. Each person who certifies, inspects, installs, maintains and services portable fire extinguishers, and/or certifies, inspects, installs, integrates, maintains or services fixed fire suppression systems and/or fire detection and alarm systems and/or engages in hydrostatic testing of DOT fire protection cylinders shall have a current and valid license issued by the State Fire Marshal.

B. Types of Endorsement. Each license shall be identified by endorsement, which indicates the authorized act or acts which may be performed by the licensee as follows.

1. Portable Fire Extinguisher/Fire Hose Technician Endorsement authorizes the person to certify, inspect, install, maintain and service portable fire extinguishers and fire hoses. No certifying, inspecting, installing, integration, maintaining or servicing of the fire hose station or standpipe

system is permitted unless properly licensed for fire sprinkler contracting.

2. Pre-Engineered Fixed Fire Suppression Technician Endorsement authorizes the person to certify, inspect, install, integrate, maintain and service pre-engineered fixed fire suppression systems.

3. Kitchen Fixed Fire Suppression Technician Endorsement authorizes the person to certify, inspect, install, integrate, maintain and service pre-engineered fixed fire suppression systems containing wet or dry chemical agents within a kitchen ventilation system.

4. Fixed Fire Suppression System Technician Endorsement authorizes the person to certify, inspect, install, integrate, maintain and service engineered or pre-engineered fixed fire suppression systems.

5. Fire Alarm Technician Endorsement authorizes a person to certify, inspect, install, integrate, maintain and service fire detection and alarm systems.

6. Fire Alarm Non-Required Systems Technician Endorsement authorizes the person to certify, inspect, install, integrate, maintain and service fire detection and alarm systems in structures or occupancies which are not required by NFPA 101 to be protected by an approved fire detection and alarm system.

7. Fire Alarm Owner Technician Endorsement authorizes the person to perform routine inspection and minor service and repair of fire detection and alarm systems/equipment within the owner's own facility. No certifying, installing or integrating of these systems/equipment is permitted. Minor service and repair is defined as repair/replacement of single initiating and/or annunciating devices with identical new devices or the replacement of the system's batteries. Routine inspection is defined as visual inspections and monthly drill tests.

8. DOT Hydrostatic Testing Technician Endorsement authorizes the person to pressure test fire protection cylinders by approved hydrostatic methods and in accordance with NFPA codes and the U.S. Department of Transportation.

9. Apprentice Endorsement authorizes the person to inspect, install, maintain and service portable fire extinguishers, fire hoses, fixed fire suppression systems and/or equipment of fire detection and alarm systems and/or equipment only while under the direct supervision of and accompanied by a licensed technician who holds a current and valid license for the work to be performed. An apprentice cannot certify fire protection systems or equipment. An apprentice endorsement can be renewed annually as long as the individual or firm desires. The supervising technician and trainee must work for the same firm which must be certified for the work to be performed.

C. Posting. It is not necessary to post an employee license on a wall. A master list of all employees' names and license numbers must be kept at each office location and must be available for review upon request by the State Fire Marshal or his designated representative.

D. Pocket License. The pocket license is for immediate identification purposes only so long as such license remains valid and while the holder is employed by the firm reflected on the license and shall be on his/her person at all times when conducting fire protection work in the field. The pocket license need not be visibly displayed when working in areas where the license may be damaged or lost. The license must still be available for inspection upon request.

E. Duplicate License. A duplicate license must be obtained from the State Fire Marshal to replace a lost or destroyed license. The license holder and his employer must submit written notification within 10 days of the loss or destruction of a license, accompanied by the required fee as specified in these rules.

F. Revised Licenses. The change of a licensee's employer, home address or mailing address or employment status requires a revised license. Licenses requiring revision must be surrendered to the State Fire Marshal within 10 days after the change requiring the revision. The license holder and his employer must submit written notification of the necessary change with the surrendered license, accompanied by the required fee as specified in these rules.

G. Non-Transferable. A license is not transferable from one person to another or from one firm to another.

H. License Reciprocity. The State Fire Marshal may waive license requirements for an applicant with a valid license from another state if that state has license requirements substantially equivalent to Louisiana and which recognizes licenses issued by this office.

I. Validity. A license is valid for one year from date of issue, and must be renewed annually unless the State Fire Marshal adopts a system under which licenses expire on various dates during the year. Should a staggered renewal system be adopted, the renewal fees shall be prorated on a monthly basis so that each licensee pays only that portion of the fee that is allocable to the number of months during which the license is valid.

J. Age Limitations. For the purpose of licensing, no one under the age of 18 shall be eligible for a technician's license and no person under the age of 16 shall be eligible for an apprentice license.

AUTHORITY NOTE: Promulgated in accordance with R.S. 40:1664.2.

HISTORICAL NOTE: Promulgated by the Department of Public Safety and Corrections, Office of State Fire Marshal, LR 17:273 (March 1991), amended LR 17:972 (October 1991), LR 26:1328 (June 2000), LR 33:1668 (August 2007).

§3017. Alteration of Certificates or Licenses

A. Any alteration of a certificate of registration or license renders it invalid and such alteration shall be the basis for administrative action in accordance with penalties set forth in R.S.40:1664.1 et seq., and these rules.

AUTHORITY NOTE: Promulgated in accordance with R.S. 40:1664.2.

HISTORICAL NOTE: Promulgated by the Department of Public Safety and Corrections, Office of State Fire Marshal, LR

17:273 (March 1991), amended LR 26:1329 (June 2000), LR 33:1669 (August 2007).

§3019 Application for Certificates of Registration

A. Applications for a certificate of registration for fire protection firms shall be in writing on the forms provided by the State Fire Marshal and accompanied by the required fee as specified in these rules.

B. The application for certificates of registration shall:

1. be executed by the sole proprietor, by each partner of a partnership, or by the authorized officer of a corporation or association;

2. identify the type of endorsement applied for;

3. identify the principal location of the firm;

4. identify the firm's Louisiana sales tax number and federal tax number;

5. identify any and all names by which the firm may conduct activity regulated by R.S. 40:1664.1 et seq., and these rules;

6. identify the contact person as defined by these rules;

7. identify the qualifying person for each endorsement applied for;

8. include a separate employee application for their qualifying person along with the qualifying person's credentials as required by the Life Safety and Property Protection Advisory Board and an originally signed and notarized employment affidavit;

9. be accompanied by:

a. at least one application with fee from an employee seeking to obtain a technician's license in each endorsement;

b. a current certificate of insurance issued to the Office of State Fire Marshal showing a minimum of $500,000 coverage;

c. a copy of the local firm or occupational license for the firm;

10. (if the firm desires a Hydrostatic Testing Endorsement) be accompanied by the following:

a. a copy of the DOT letter registering applicant's facility which awards a registration number to the facility; and

b. a copy of the firm's identifying mark (symbol);

11. (for out of state firms) include a list of all vehicles which shall come into this state to conduct activity regulated by R.S. 40:1664 et seq., and these rules The list shall include the vehicle's make, model, year and license number.

C. The application shall also include written authorization by the applicant permitting the State Fire Marshal or his representative to enter, examine, and inspect any premise, building, room, vehicle, or establishment used by the applicant while engaged in activity to determine compliance with the provisions of R.S.40:1664.1 et seq., and these rules.

D. When the applicant has completed the requirements contained above, a pre-certification inspection may be conducted at the facilities or of the vehicles of the applicant Such inspection is to determine that such equipment necessary to perform activities in accordance with the applicable NFPA codes and/or standards, UL or manufacturer's specifications for which the applicant is applying to be certified is on hand. The office may inspect vehicles, equipment, buildings, devices, premises or any area to be used in performing the activities allowed by the certificate of registration. After issuance of a certificate of registration, such facilities may be inspected annually thereafter or as frequently as deemed necessary to ensure that the equipment requirement continues to be met.

AUTHORITY NOTE: Promulgated in accordance with R.S. 40:1664.2.

HISTORICAL NOTE: Promulgated by the Department of Public Safety and Corrections, Office of State Fire Marshal, LR 17:273 (March 1991), amended LR 17:972 (October 1991), LR 26:1329 (June 2000), LR 33:1669 (August 2007).

§3021. Qualifying Persons

A. Each certified firm or each firm seeking certification shall employ at least one qualifying person for each endorsement it is making application for. No fire protection system or equipment shall be certified, hydrostatically tested, inspected, installed, integrated, maintained, serviced, or submitted to this office for review if the firm does not employ a qualifying person as provided herein.

B. The qualifying person shall be a paid employee and shall receive a W-2 or K-1 tax form from the firm. The qualifier shall only qualify one firm for which he is employed. An individual may not qualify multiple firms at the same time. A contract employee cannot be used to fulfill this requirement except as provided by Subsection G below. A qualifier must physically reside within 150 miles of the office for which he or she qualifies.

C. The qualifying person shall be primarily and actively engaged in direct supervision of the certification, hydrostatic testing, integrating, inspection, installation, maintaining and servicing of those fire protection systems or equipment the firm holds endorsements for. If a firm holds multiple endorsements, then multiple qualifiers may be utilized to meet this requirement. Upon request by the fire marshal or his representative, a qualifier shall provide documentation attesting to his or her direct supervision of any certification, hydrostatic testing, integration, inspection, installation, maintenance or service performed by the firm he or she qualifies.

D. A qualifier must meet the minimum examination, certification, or training requirements as established by the Life Safety and Property Protection Advisory Board. The state fire marshal shall send notice to licensed firms of all changes to qualifier credentials made by the Life Safety and Property Protection Advisory Board.

E. The following requirements are required for the endorsements listed.

1. Fixed Fire Suppression Endorsement—a current NICET Certificate, minimum Level III in Special Hazards Suppression Systems, or a professional engineer currently registered with the Louisiana Board of Professional Engineers with a Mechanical Engineer endorsement.

2. Fire Alarm Endorsement—a current NICET Certificate, minimum Level III in Fire Alarm Systems, or a professional engineer currently registered with the Louisiana Board of Professional Engineers with an Electrical Engineer endorsement.

F. A Louisiana Board of Professional Engineers registered Fire Protection Engineer may substitute for any of the above if documented to be in the appropriate discipline of endorsement.

G. At any time that a firm finds itself without a qualifying person, such firm shall only be able to continue certifying, hydrostatic testing, inspecting, maintaining and/or servicing existing contractual obligations for that endorsement but shall not engage in any new work until a qualifying person has been employed as provided herein.

H. This office shall be notified in writing within 10 working days anytime a qualifying person's employment is terminated for any reason.

I. A firm which loses its qualifying person and has timely notified the Office of State Fire Marshal shall have 60 days to hire another qualifying person. If after the loss of such an employee, a replacement cannot be found within the 60 days, the firm may make a request to the Office of State Fire Marshal to temporarily hire a qualifying person on a contractual basis. Good cause must be shown why another employee cannot be permanently hired. Approval by the Office of State Fire Marshal for the hiring of a qualifying person on a contractual basis shall not exceed six months. Not later than 30 days prior to the expiration of the six month period, the firm can request an additional six-month period to employ a qualifying person on a contractual basis. The Office of State Fire Marshal may grant one additional six-month period during which a firm may employ a qualifying person on a contractual basis.

J. Failure to notify this office in writing within 10 working days of the loss of a qualifying person will cause forfeiture of any extension of time to hire another qualifying person.

K. A qualifying person must obtain an individual employee license as required by these rules. Licensure of the qualifier shall include a signed and notarized affidavit indicating the employment relationship and duties of the qualifier. If a firm desires to use multiple qualifiers for submitting plans and supervising installations or service, then it must register and license the additional qualifiers with the Office of State Fire Marshal.

AUTHORITY NOTE: Promulgated in accordance with R.S. 40:1664.2.

HISTORICAL NOTE: Promulgated by the Department of Public Safety and Corrections, Office of State Fire Marshal, LR 33:1670 (August 2007).

§3023. Application for Licenses

A. Applications for a license from an employee of a certified firm shall be on forms provided by the State Fire Marshal and accompanied by the required fee as specified in these rules.

B. Applications for technicians' licenses shall be accompanied by a written statement from the employer certifying the applicant's competency to certify, hydrostatic test, inspect, install, integrate, maintain or service those systems and/or equipment for which the applicant desires to become licensed.

C. Applications for technicians' licenses will not be accepted unless accompanied by documentation showing that the applicant has met all competency requirements as determined by the Life Safety and Property Protection Advisory Board.

D. No competency examination is required for an apprentice.

AUTHORITY NOTE: Promulgated in accordance with R.S. 40:1664.2.

HISTORICAL NOTE: Promulgated by the Department of Public Safety and Corrections, Office of State Fire Marshal, LR 17:273 (March 1991), amended LR 26:1330 (June 2000), LR 33:1671 (August 2007).

§3025. Fees—General Information

A. Every fee required in accordance with the provisions of R.S. 40:1664.1 et seq., and these rules, shall be paid by firm check or certified funds made payable to the "Office of State Fire Marshal." Cash or personal checks cannot be accepted.

B. Fees shall be paid at, or mailed to, the Office of State Fire Marshal at 8181 Independence Blvd., Baton Rouge, LA 70806.

C. Late fees are required on all certificates of registration or license holders who fail to submit renewal applications in a timely fashioned as outlined in R.S. 40:1664.1 et seq.

D. A renewal application accompanied by the required renewal fee and deposited with the United States Postal Service is deemed to be timely filed, regardless of actual date of delivery, when its envelope bears a legible postmark date which is on or before the expiration date of the certificate or license being renewed.

E. Certificates or licenses which have been expired for more than 60 days will be suspended and applicants must apply and pay for a new certificate of registration or license.

AUTHORITY NOTE: Promulgated in accordance with R.S. 40:1664.2.

HISTORICAL NOTE: Promulgated by the Department of Public Safety and Corrections, Office of State Fire Marshal, LR 17:273 (March 1991), amended LR 26:1330 (June 1330), LR 33:1671 (August 2007).

§3027. Fees—Specific Information

A. Certificate of Registration Fees

Certificate	Initial	Renewal
Technical Endorsement		
Fixed Fire Suppression	$350	$100
Specialty Endorsement		
Pre-Engineered	$350	$100
Kitchen Suppression	$350	$ 50
Technical Endorsement		
Fire Alarm	$350	$100
Specialty Endorsement		
Fire Alarm (Non-required)	$350	$ 50
Fire Alarm Owner	$350	$ 50
Technical Endorsement		
Portable Fire Extinguishers/Hoses	$350	$150
Technical Endorsement		
DOT Hydrostatic testing	$350	$ 50

B. License Fees

Certificate	Initial	Renewal
Technical Endorsement		
Fixed Fire Suppression	$50	$50
Specialty Endorsement		
Pre-Engineered	$50	$50
Kitchen Suppression	$50	$50
Technical Endorsement		
Fire Alarm	$50	$50
Specialty Endorsement		
Fire Alarm(Non-required)	$50	$50
Fire Alarm Owner	$50	$50
Technical Endorsement		
Portable Fire Extinguishers/Hoses	$50	$50
Technical Endorsement		
DOT Hydrostatic testing	$25	$25
Technical Endorsement		
Apprentice	$50	$50

C. Late Renewal Fee. A penalty shall be assessed in accordance with R.S. 40:1664.9 for the late renewal of a certificate of registration or license.

D. Change in ownership—$350.

E. Changes or alterations—$20.

F. Duplicate Certificates of Registration—$20.

G. Initial Competency Examination Fee—$25 (non-refundable)(per exam).

H. Re-Examination Fee—$25 (non-refundable)(per re-exam).

AUTHORITY NOTE: Promulgated in accordance with R.S. 40:1664.2.

HISTORICAL NOTE: Promulgated by the Department of Public Safety and Corrections, Office of State Fire Marshal, LR 17:273 (March 1991), amended LR 17:972 (October 1991), LR 26:1331 (June 2000), LR 33:1671 (August 2007).

§3029. Examinations

A. Applicants for licenses are required to take an examination and obtain at least a grade of 70 percent in each appropriate section of the examination. Examinations may be supplemented by practical tests or demonstrations deemed necessary to determine the applicant's knowledge and ability.

B. The technician's license examination will include the following:

1. a section on these rules and R.S. 40:1664.1 et seq.;

2. a section on the certifying, hydrostatic testing, inspecting, installing, integrating, maintaining and servicing of those types of systems or equipment for which the applicant desires to be licensed.

C. The standards used in examinations will be those applicable codes and standards as noted or as adopted by LAC-55:V:103 as follows.

1. Portable Fire Extinguisher/Fire Hose—NFPA 10, 101, 1961, and 1962.

2. Fixed Fire Suppression—NFPA 11, 11A (1999 Edition), 12, 12A, 17, 17A, 96, 101 and 2001.

3. Pre-Engineered Fixed Fire Suppression—NFPA 11, 11A (1999 Edition), 12, 12A, 17, 17A, 96, 101 and 2001.

4 Kitchen Fixed Fire Suppression—NFPA 17, 17A, 96 and 101.

5. Fire Alarm—NFPA 70 (only those articles that address fire alarm wiring), 72, 90A, 90B and 101.

6. Fire Alarm (non-required)—NFPA 70 (only those articles that address fire alarm wiring), 72, 90A, 90B and 101.

7. Fire Alarm Owner—NFPA 70 (only those articles that address fire alarm wiring), 72, 90A, 90B and 101.

8. DOT Hydrostatic Testing—CFR 49, NFPA 1961 and 1962.

D. Applicants who fail any section may file a reexamination application accompanied by the required fee and retake the examination.

E. A person whose license has been expired for two years or longer must take and pass another examination or approved training course prior to the issuance of a new license. No examination is required for a license holder whose license is renewed within two years of expiration.

F. A person who desires to take a competency test must first pre-register for that test with the State Fire Marshal's Office or the examination administrator designated by the State Fire Marshal, on a pre-registration form provided by this office or the examination administrator. The pre-registration form and the required fee must be received by the office five working days prior to the examination date.

G. Results. Examination scores shall be mailed to the applicant's address as listed on the pre-registration form within 30 days after completing the test.

H. In lieu of an examination, the Office of State Fire Marshal may accept an approved training course in which an examination is also given. The Office of State Fire Marshal shall determine whether the training course is equivalent to the examination requirements and may audit the course, at no cost to the office, prior to final determination and periodically to ensure continued equivalency. Requests for

acceptance of a training course to be equivalent must be made in writing and include the following:

1. course outline and syllabus;

2. length of course and specific time covered per topic;

3. example of test questions;

4. a copy of the certificate granted.

AUTHORITY NOTE: Promulgated in accordance with R.S. 40:1664.2.

HISTORICAL NOTE: Promulgated by the Department of Public Safety and Corrections, Office of State Fire Marshal, LR 17:273 (March 1991), amended LR 26:1331 (June 2000), LR 33:1671 (August 2007).

§3031. Portable Fire Extinguishers/Fire Hoses

A. General Provisions

1. Portable fire extinguishers and fire hoses shall be certified, hydrostatically tested, inspected, installed, maintained and serviced in compliance with NFPA 10 or 1961 or 1962, as adopted by the Office of State Fire Marshal in LAC-55:V:103 or noted in these rules.

2. A service tag shall be securely attached by the licensee to the portable upon completion of any work.

3. When an extinguisher or fire hose is found to be in a condition which would not allow hydrostatic testing as described in NFPA 10 or 1961 or 1962, as adopted by the Office of State Fire Marshal in LAC-55:V:103 noted in these rules, then the extinguisher or hose shall be red tagged or removed from service and destroyed in accordance with the applicable code or standard and these rules.

4. When an extinguisher is removed from the owner's premise for service, a replacement extinguisher shall be left of equal or greater rating on a one for one basis by the portable fire extinguisher/fire hose firm. Replacements need not be left where a building owner has fire extinguishers in excess of the required amount as required by NFPA 10 and NFPA 101 as adopted by the Office of State Fire Marshal in LAC-55:V:103.

5. Anytime an extinguisher is opened for any reason then the appropriate maintenance procedures in NFPA 10 as adopted by the Office of State Fire Marshal in LAC 55:V:103, shall be performed. If these procedures fulfill the requirements of a six-year maintenance then a record tag shall be affixed to the exterior of the extinguisher shell. Future six-year maintenance procedures shall begin from that date.

B. Record Tag. Each six year maintenance shall be recorded on a record tag consisting of a decal which shall be affixed (by a heatless process) on the exterior of the extinguisher shell. The decal shall either be metallic or of an equally durable material which does not corrode and which remains affixed to the extinguisher for the required period. The decal shall also not fade, wash away, or otherwise become illegible. This paragraph supersedes labeling requirements set forth in NFPA 10 as adopted by the Office of State Fire Marshal in LAC 55:V:103. Previous six-year maintenance record tags shall be removed when a new one is affixed. The record tag shall contain the following information:

1. year and month that the six-year maintenance was performed;

2. the name of the firm and its certificate number (must be pre-printed);

3. the initials of the person performing the maintenance and his/her license number.

C. External Verification Collar

1. In addition to any other tag required by these rules, an external verification collar shall be provided each time an extinguisher is opened up for any type of maintenance or for any purpose.

2. The standard external verification collar shall be on durable material. Self adhesive collars shall be permitted. Any color may be used with the exception of yellow or red.

D. External verification collars shall bear the following:

1. the certificate number of servicing firm (preprinted or printed in permanent ink);

2. name and license number of the person who performed the service (preprinted or printed in permanent ink);

3. month and year that the service was performed (to be punched).

E. A new external verification collar shall be provided for an extinguisher each time internal maintenance or recharging is performed or the extinguisher is opened for any other reason. A new external verification collar is not needed when a CO_2 extinguisher is recharged without opening the cylinder for inspection or on side cartridge type extinguishers.

F. External verification collars shall be affixed in the following manner:

1. any collar previously attached shall be removed prior to affixing a new collar;

2. the collar shall be placed around the exterior of the cylinder at or below the valve assembly.

G. The collar shall contain a single circular piece of uninterrupted material forming a hole of a size that will not allow the collar assembly to move over the neck of the cylinder unless the valve is completely removed. In no case shall the diameter of the opening exceed 1/4" the diameter of the cylinder's neck, measured directly below the valve assembly.

AUTHORITY NOTE: Promulgated in accordance with R.S. 40:1664.2.

HISTORICAL NOTE: Promulgated by the Department of Public Safety and Corrections, Office of State Fire Marshal, LR 33:1672 (August 2007).

§3033. Fixed Fire Suppression and Fire Detection and Alarm Systems and Equipment

A. All new (complete or renovated) required fixed fire suppression systems including kitchen, pre-engineered and engineered systems, and fire detection and alarm systems shall be certified, hydrostatically tested, inspected, installed, integrated, maintained and serviced in compliance with the manufacturer's installation manuals, specifications, reviewed plans and the applicable codes and standards adopted in LAC 55:V:103 or noted in these rules.

B. All existing required fixed fire suppression systems including kitchen, pre-engineered and engineered systems, and fire detection and alarm systems shall be certified, hydrostatically tested, inspected, integrated, maintained and serviced in an operational condition in accordance with the manufacturer's installation manuals, specifications, and per the inspection, testing and maintenance chapters of the applicable codes and standards adopted in L.A.C.55:V.103 or noted in these rules.

C. All non-required and non-conforming fixed fire suppression systems including kitchen, pre-engineered and engineered systems, and fire detection and alarm systems shall be certified, inspected, installed, integrated, maintained and serviced in compliance with the manufacturer's installation manuals, specifications, and deviations from the applicable codes and standards adopted in LAC 55:V.103 and these rules as authorized by the Office of State Fire Marshal.

D. Non-required and/or non-conforming systems/ equipment which only comprise of smoke or heat detectors connected to a burglar alarm system need not be inspected and certified annually by a certified fire alarm system firm. The owner of these systems must ensure these systems are functional and maintained in compliance with the manufacturer's specifications and NFPA 101 as adopted in LAC 55:V:103 and these rules.

E. All systems, except as noted in Subsection D above, shall be certified, hydrostatically tested, inspected, installed, integrated, maintained and serviced by certified firms having licensed personnel working within their certification and licensing discipline. In cases where disciplines cross over, the following reasoning will prevail.

1. Automatic detection and control systems will be certified, inspected, installed, integrated, maintained and serviced by firms certified to install fire detection and alarm systems and/or equipment unless it is just the section device associated with the actuation of a kitchen, pre-engineered or engineered system, in which case the fire detection and alarm firm is not needed. However, any connection of that kitchen, pre-engineered or engineered system to any alarm initiated system, to include but not limited to annunciator panels, HVAC shutdown and any other auxiliary feature controlled by the fire alarm system, then a firm with a Fire Alarm endorsement must certify, inspect, install, integrate, maintain or service the device.

2. Water supply and distribution piping systems as provided for in NFPA 25, as adopted in LAC-55:V.103 and these rules will be certified, inspected, installed, integrated, maintained and serviced by a firm with a Fire Sprinkler endorsement as regulated by R.S. 40:1664.1 et seq. Foam systems providing foam solution to fire monitors, portable nozzles, or fire trucks are excluded from this rule.

3. Alarm devices such as flow switches, pressure switches, low air pressure switches that are an integral part of a fire protection sprinkler piping system must be installed by a firm with a Fire Sprinkler endorsement as regulated by R.S. 40:16641 et seq., and connected to the fire alarm system by a firm with a Fire Alarm endorsement.

F. All non-required or non-conforming systems require written permission and possible review from the Office of State Fire Marshal Plan Review Section prior to installation. Non-conforming systems shall be maintained in a functioning operational state as long as the system is within the facility. Non-required systems shall be maintained in accordance with the inspection, testing, and maintenance chapters of the applicable NFPA codes, standards and manufacturer's specifications governing that particular system as long as the system is within the facility.

G. Interconnected smoke or heat detector systems as required by the NFPA 101, as adopted by the Office of State Fire Marshal in LAC-55:V.103 and these rules, or as authorized by this office must be inspected, installed, integrated, maintained and serviced by either a certified fire detection and alarm firm or an electrical contractor as provided by R.S. 40:1664.1 et seq. These systems must be submitted to this office's Plan Review Section for review prior to installation.

H. Each heat detector (fusible link) employed within a fixed fire suppression system shall have the manufacturer date marked on the detector. The date shall reflect the current or previous calendar year when installed.

I. External Verification Collar

1. In addition to any other tag required by these rules, an external verification collar shall be provided each time a fixed fire suppression agent cylinder is opened for any purpose.

2. The external verification collar shall be on durable material. Self adhesive collars shall be permitted. Any color may be used with the exception of yellow or red.

3. External verification collars shall bear the following:

a. the certificate number of servicing firm, preprinted or printed in permanent ink;

b. name and license number of the person who performed the service, preprinted or printed in permanent ink;

c. month and year that the service was performed. This information must be punched.

J. A new external verification collar is not needed in the following circumstances:

1. when a CO_2 fixed fire suppression cylinder is recharged without opening the cylinder for inspection;

2. cartridge operated type of systems.

K. External verification collars shall be affixed in the following manner:

1. any collar previously attached shall be removed prior to affixing a new collar;

2. the collar shall be placed around the exterior of the cylinder at or below the valve assembly.

L. The collar shall contain a single circular piece of uninterrupted material forming a hole of a size that will not allow the collar assembly to move over the neck of the cylinder unless the valve is completely removed. In no case shall the diameter of the opening exceed 1/4" the diameter of the cylinder's neck, measured directly below the valve assembly.

M. The office may exempt additional cylinders from this requirement if good cause is shown that the requirement is impractical or overly burdensome.

AUTHORITY NOTE: Promulgated in accordance with R.S. 40:1664.2.

HISTORICAL NOTE: Promulgated by the Department of Public Safety and Corrections, Office of State Fire Marshal, LR 17:273 (March 1991), amended LR 26:1332 (June 2000), LR 33:1673 (August 2007).

§3035. Hydrostatic Tests

A. All hydrostatic testing shall be conducted in compliance with U.S. Department of Transportation hydrostatic testing requirements, or, where applicable, in compliance with the appropriate NFPA code or standard as adopted by the Office of State Fire Marshal in LAC 55:V.103 and these rules. The owner shall be informed of a needed test or replacement.

B. Recording of Tests

1. High Pressure Cylinders. High pressure cylinders and cartridges shall be stamped in accordance with the applicable NFPA and D.O.T. standards as adopted by the Office of State Fire Marshal in LAC 55:V.103 and these rules.

2. Low Pressure Cylinders. Each hydrostatic test shall be recorded on a record tag consisting of a decal which shall be affixed by a heatless process on the exterior of the extinguisher cylinder. The decal shall either be metallic or of an equally durable material which does not corrode and which remains affixed to the extinguisher for the required period. The decal shall also not fade, wash away, or otherwise become illegible.

3. The record tag shall contain the following information, which, exception for Subparagraphs c and d hereof, must be hand punched:

a. year and month that the hydrostatic test was performed;

b. test pressure used;

c. name of the firm and its certificate number (must be pre-printed);

d. initials of the person performing the maintenance and his license number.

4. Previous hydrostatic test record tags shall be removed when a new one is affixed.

5. The licensed firm shall keep a permanent record of each hydrostatic test performed for a minimum of five years. The record shall include as a minimum the following:

a. date of test;

b. cylinder serial number;

c. model number;

d. cylinder size;

e. test pressure;

f. visual inspection result;

g. cylinder disposition;

h. initials of the person performing the test;

i. owner of cylinder.

6. Fire Hoses. Records of fire hose tests shall comply with the latest edition of NFPA 1962 as enumerated in LAC 55:V.103 and these rules.

AUTHORITY NOTE: Promulgated in accordance with R.S. 40:1664.2.

HISTORICAL NOTE: Promulgated by the Department of Public Safety and Corrections, Office of State Fire Marshal, LR 17:273 (March 1991), amended LR 26:1333 (June 2000), LR 33:1674 (August 2007).

§3037. Installation Tags

A. Upon installation of any new fire protection system, the system shall have a tag permanently affixed to the panel for fire detection and alarm and fixed fire suppression systems. On kitchen fixed fire suppression systems, the tag shall be permanently affixed to the side of the suppression agent cylinder. This requirement does not apply to portable fire extinguishers. The installation tag shall be a minimum of 2 3/4 inches by 2 3/4 inches. Maximum size cannot exceed 5 inches by 5 inches. The tag shall be white in color and have a self adhesive backing. The following information and wording shall be required to be preprinted on the front side of the tag:

1. "**DO NOT REMOVE BY ORDER OF THE STATE FIRE MARSHAL**" (all capital letters, in bold type);

2. installation tag;

3. installation date;

4. firm's name;

5. firm's certificate number;

6. technician's name;

7. technician's license number;

8. technician's signature;

9. NFPA Code edition system was installed under;

10. plan review or exemption number;

11. serial or model number of panel and/or cylinder, if applicable.

B. All tags shall have a signature line for the technician to sign the tag upon completion of the work. No preprinted signatures are permitted. Technicians must sign the tag; initials are not permitted. Other information to be completed on the tag may be either handwritten or preprinted. Apprentices are not permitted to sign tags.

C. If after initial installation a cylinder or panel is replaced for any reason, a new installation tag shall be completed and attached as above, noting the appropriate changes in information.

D. If an installation tag is replaced, hand-write "REPLACEMENT" after the installation date. If the original installation date is not known, the date of replacement can be used.

E. Copies of certificates of compliance required to be completed by this office shall be attached to the system in a plastic pocket pouch/sleeve or given to the owner for filing.

AUTHORITY NOTE: Promulgated in accordance with R.S. 40:1664.2.

HISTORICAL NOTE: Promulgated by the Department of Public Safety and Corrections, Office of State Fire Marshal, LR 17:273 (March 1991), amended LR 26:1334 (June 2000), LR 33:1674 (August 2007).

§3039. Service Tags, Yellow Tags, Red Tags, and Stenciling

A. All portable fire extinguishers, fire hoses, fixed fire suppression equipment and/or systems, and fire detection and alarm equipment and/or systems shall be tagged or stenciled in the following manner.

B. Service Tags

1. A service tag shall be completed and attached to a portable fire extinguisher, fire hoses, a fixed fire suppression system, and a fire detection and alarm system, after it has been certified, hydrostatically tested, inspected, installed, maintained or serviced indicating all work that has been done. Fire hoses shall be stenciled in ink after being hydrostatically tested.

2. Service tags shall be green in color for fixed fire suppression systems, and fire detection and alarm systems. Service tags may be of any color but yellow or red for portable fire extinguishers and fire hoses. Fire hoses shall be stenciled in a contrasting color to that of the hose.

3. The service tag shall be attached at the following locations.

a. For portable fire extinguishers, the tag shall be attached at the valve/neck assembly or gauge. It shall not be attached on the hose.

b. For fixed fire suppression systems, the tag shall be attached at each cylinder and each control panel.

c. For kitchen fixed fire suppression systems, the tag shall be attached at each cylinder and each manual pull station.

d. For fire detection and alarm systems, the tag shall be attached at each control panel, (Booster panels that are part of a fire detection and alarm system need not be tagged.).

e. For fire hoses, the tag shall be located at the female coupling.

f. For fire hoses, the stencil shall be located at both couplings.

4. The service tag shall be attached in such a way as to not hamper the actuation and operation of the equipment or system.

5. A service tag shall be attached on all systems or equipment found to be in proper working condition and which are found to be in an operational condition per the inspection, testing and maintenance chapters of the applicable NFPA codes and standards. This tag shall be used for new installations and shall be in addition to the installation tag provided for in these rules. This tag shall also be used for all service and maintenance where the system is found to meet the above conditions.

6. Service tags must contain all of the information listed below:

a. "**DO NOT REMOVE BY ORDER OF THE STATE FIRE MARSHAL**" (all capital letters in bold face type);

b. servicing firm's name, address and telephone number;

c. servicing firm's State Fire Marshal certificate number;

d. servicing technician's name and State Fire Marshal license number to be printed on tag either at the time of service or preprinted;

e. servicing technician's signature to be signed at time of service (no preprinted signatures nor initials are permitted, except that tags attached to portable fire extinguishers may use preprinted signatures; apprentices are not permitted to sign tags);

f. day, month and year in which service was performed (must be punched through service tag at designated marks for day, month and year; designated marks for day, month and year shall only be punched once per tag);

g. type of work performed, only installation, certification, and service shall be noted on tag for type of work performed (must be punched through the service tag):

i. "Installation" shall be punched on the tag when the fire protection system or equipment is initially placed into service or after an addition or extension to the system has been made. Punching "Installation" indicates the initial certification of the system or equipment has been completed;

ii. "Certification" shall be punched on the tag when the fire protection system or equipment has its six

month or annual inspection or maintenance. Punching "Certification" indicates that any required service performed to the system or equipment at the time has been completed;

iii. "Service" shall be punched on the tag when the fire protection system or equipment is repaired or replaced to ensure proper operation in between required certification periods;

iv. specifics as to the type of work performed shall be noted on rear of tag, (i.e., new installation, annual certification, annual maintenance, recharged cylinder, changed smoke detector, repaired pull station, etc);

h. serial number of portable fire extinguisher, fixed fire suppression system cylinder and/or panel and fire detection and alarm system control panel;

i. owner of system and address of owner (to be noted on rear of tag).

7. Other information may be permitted on the tag after a review and approval by the fire marshal. A request for additional information shall be made to the fire marshal in writing with a sample tag indicating the requested additions.

8. Stenciled information on fire hoses shall include the test pressure, date of test and firm license number.

B. Partial Impairment Tags (Yellow Tags)

1. All firms engaged in the activity of certifying, hydrostatic testing, inspecting, installing, integrating, maintaining or servicing of portable fire extinguishers, fixed fire suppression systems, and/or fire detection and alarm systems shall be allowed to have a partial impairment tag, to be yellow in color, which is to be used when minor deficiencies are found on the equipment or system. The partial impairment tag is in addition to the requirement of having a service tag and impairment tag.

2. A partial impairment tag may be placed on all equipment or systems in which there is a deficiency with the equipment or system but where the equipment or system is still functional. This would include situations where routine service is needed but has not been approved by the owner of the equipment or system as well as systems which are required to be monitored off-site but monitoring is not provided.

3. A partial impairment tag shall not remain on equipment or a system for more than 60 days. If the problem is not corrected after 60 days the certified firm shall be required to notify, in writing, the Office of State Fire Marshal Inspection Section.

4. Partial impairment tags must contain all of the information listed below:

a. "**DO NOT REMOVE BY ORDER OF THE STATE FIRE MARSHAL**" (all capital letters in bold face type);

b. servicing firm's name, address and telephone number;

c. servicing firm's State Fire Marshal certificate number;

d. servicing technician's name and State Fire Marshal license number to be printed on tag either at the time of service or preprinted;

e. servicing technician's signature to be signed at time of inspection (no preprinted signatures nor initials are permitted; (apprentices are not permitted to sign tags);

f. day, month and year in which the impairment was found (to be punched through service tag at designated marks for day, month and year; designated marks for day, month and year shall only be punched once per tag);

g. type of impairment found (to be hand written on rear of tag);If additional space is needed to note the impairments, then multiple tags shall be used noting 1 of 2, 2 of 2, etc.;

h. serial number of portable fire extinguisher or fixed fire suppression system cylinder and/or panel, fire detection and alarm system control panel;

i. owner of system and address of owner (to be noted on rear of tag).

C. Impairment Tags (Red Tags)

1. All firms engaged in the activity of certifying, hydrostatic testing, inspecting, installing, integrating, maintaining or servicing of portable fire extinguishers, fixed fire suppression systems, and/or fire detection and alarm systems shall have an impairment tag, to be red in color, which is to be used when major deficiencies are found on these systems or equipment.

2. An impairment tag shall be placed on all fixed fire suppression or fire detection and alarm systems upon discovery that the system or equipment is impaired to the point that life safety is at risk or to the point that the automatic or manual discharge system will be prevented from functioning as intended.

3. Portable fire extinguishers shall be red tagged when the equipment is inoperable for any reason.

4. Impairment tags shall also be placed on any equipment or system where life safety is in imminent danger.

5. A red tag is not required to be placed on a fire hose which fails hydrostatic testing, but rather, the fire hose shall be removed from service.

6. Written notice shall be made to the owner and to the Office of State Fire Marshal Inspection Section by the certified firm as soon as is practically possible but shall not exceed two working days after the system or equipment is red tagged. Notification to the Office of State Fire Marshal is not needed for fire hoses removed from service. Written notification can be by electronic mail or facsimile. The Office of State Fire Marshal shall provide a form for notification. Additional notification (written or verbally) should be made to the local fire department when a system is red tagged.

7. Impairment tags must contain all of the information listed below:

a. "**DO NOT REMOVE BY ORDER OF THE STATE FIRE MARSHAL**" (all capital letters in bold face type);

b. servicing firm's name, address and telephone number;

c. servicing firm's State Fire Marshal certificate number;

d. servicing technician's name and State Fire Marshal license number to be printed on tag either at the time of service or preprinted;

e. servicing technician's signature to be signed at time of inspection (no preprinted signatures nor initials are permitted; apprentices are not permitted to sign tags);

f. day, month and year in which the inspection was performed (to be punched through service tag at designated marks for day, month and year; designated marks for day, month and year shall only be punched once per tag);

g. type of impairment found (to be hand written on rear of tag). If additional space is needed to note the impairments, then multiple tags shall be used noting 1 of 2, 2 of 2, etc.;

h. serial number of portable fire extinguisher, fixed fire suppression system cylinder and/or panel, or fire detection and alarm system control panel;

i. owner of system and address of owner (to be noted on rear of tag.

8. Notification of fire protection equipment/systems inspections where no deficiencies are found need not be sent to the Office of State Fire Marshal unless specifically requested.

D. Written Notification. The following information is required to be sent when written notification is made to the Office of State Fire Marshal Inspection Section:

1. name, address, and telephone number of the owner of the system;

2. name, address, telephone number, and certificate number of the firm noting the impairment;

3. name and license number of the technician who did the inspection;

4. type of system (manufacturer and model number should also be included);

5. code, inspection chapter and year edition firm used for inspection;

6. reason for the impairment (Note: a copy of the inspection or service report shall be included); and

7. date system or equipment was red or yellow tagged.

E. Non-Required and/or Non-Conforming Systems. Where a fire protection system is non-required or permitted to be installed in a non-conforming state by this office or is both non-required and non-conforming then the following additions shall be made to the guidelines set forth in this Section.

1. Each firm shall stamp or write on the installation tag and/or service tag one of the following statements as applicable:

a. "NON-REQUIRED SYSTEM"; or

b. "NON-CONFORMING SYSTEM"; or

c. "NON-REQUIRED/NON-CONFORMING SYSTEM".

2. Such print or stamp shall be in all capital lettering and be written or stamped so as to not obscure other information provided on the tag.

3. This does not supersede the requirements to place a yellow or red tag on a system that is impaired in any way.

F. Miscellaneous Provisions

1. On all fixed fire suppression and fire detection and alarm systems, a plastic pocket pouch/sleeve shall also be attached to the panel, or tank, as appropriate, where all tags shall be maintained for a period of one year after the system's annual inspection. For kitchen fixed fire suppression systems, the pocket pouch/sleeve shall be attached at or near a manual pull station. Upon a new annual or six month certification, all previous service tags may be removed and given to the owner to keep on file. This requirement does not apply to portable fire extinguishers or fire hoses.

2. All tags must be card stock, plastic, vinyl, tyevak or metal in order to maintain the running record for the system. One sided or self adhesive service tags are not permitted except for fire protection equipment or systems in areas subject to adverse conditions. Self adhesive tags shall contain all of the information required on hanging tags.

3. All tags shall be 5 1/4 inches in height and 2 5/8 inches in width.

4. Firms shall have their tags printed and one forwarded to the State Fire Marshal's Licensing Section for approval and incorporation in the firm's file.

5. Tags may be removed only by licensed employees of a certified firm or employees of the State Fire Marshal's Office and certified fire prevention bureaus.

AUTHORITY NOTE: Promulgated in accordance with R.S. 40:1664.2.

HISTORICAL NOTE: Promulgated by the Department of Public Safety and Corrections, Office of State Fire Marshal, LR 17:273 (March 1991), amended LR 26:1334 (June 2000), LR 33:1675 (August 2007).

§3041. Prohibited Acts and Equipment

A. The following acts are prohibited and shall be considered grounds for administrative action to be taken against firms, persons and/or employees committing such:

1. charging a customer for work that was not performed;

2. misrepresenting oneself and/or one's firm to a customer, prospective customer or to employees of the state fire marshal, his designated representative or other public official;

3. impersonating the state fire marshal, his designated representative or any other public official;

4. intimidating or coercing a customer;

5. certifying, hydrostatically testing, inspecting, installing, integrating, maintaining or servicing fire protection systems and/or equipment contrary to plans submitted for review, applicable NFPA codes, standards, and/or manufacturer's specifications without specific written permission from the Office of State Fire Marshal;

6. falsifying an application or any other document submitted to obtain a certificate or license or other documentation requested by or submitted to the Office of State Fire Marshal;

7. falsifying tags, labels, stenciling, inspection reports, invoices, system reports, and/or other documents;

8. working an apprentice, or as an apprentice, without direct supervision by a technician licensed to perform the work being done and licensed to the same firm;

9. working an employee without the appropriate endorsement of license;

10. working without the appropriate endorsement of firm certificate or license;

11. working with an expired firm certificate or license;

12. failing to notify the Office of State Fire Marshal of any changes that affect licensure;

13. contracting to a firm or person who is not properly certified or licensed through the Office of State Fire Marshal to perform acts regulated by the provisions of R.S. 40:1664.1 et seq., or these rules;

14. failing to adhere to the tagging and/or notification policies of the Office of State Fire Marshal;

15. installing a fixed fire suppression system, or fire detection and alarm system prior to submitting plans and required documentation and receiving authorization to install such system from the Plan Review Section of the Office of State Fire Marshal;

16. failing to possess the equipment, tools, NFPA codes, standards or manufacturer's U.L. listed installation and service manuals to properly certify, hydrostatic test, inspect, install, integrate, maintain or service the systems or equipment for which a firm is certified;

17. failing to adhere to all applicable laws and rules governing fire protection systems and/or equipment as promulgated by the Office of State Fire Marshal;

18. engaging in false, misleading or deceptive acts or practices;

19. aiding and abetting an unlicensed person or firm in the certifying, hydrostatic testing, inspecting, installing, integrating, maintaining or servicing of a portable fire extinguisher, fire hose, fixed fire suppression equipment and/or system, or fire detection and alarm equipment and/or system.

B. The following portable fire extinguishers and cylinders are prohibited from use:

1. carbon tetrachloride portables;

2. portable fire extinguishers or fixed fire suppression system cylinders without labels of an approved testing laboratory or name plates:

a. exception: a portable fire extinguisher or fixed fire suppression system cylinder in an industrial facility, whose original label or name plate has been removed for refurbishing, may have a manufacturer approved replacement label or name plate reattached if maintenance records, as provided below, are maintained;

b. maintenance records shall include the following:

i. manufacturer;

ii. type and size of the portable fire extinguisher or fixed fire suppression system cylinder;

iii. serial number or unique tracking number of portable fire extinguisher or fixed fire suppression system cylinder; and

iv. dates and types of service performed;

3. any portable fire extinguisher or fixed fire suppression system cylinder prohibited by the adopted NFPA codes and standards enumerated in LAC 55:V:103 and these rules;

4. any fire protection equipment or system which has been recalled from the manufacturer or has had its listing from an approved testing laboratory removed;

5. systems or portables in which replacement parts are no longer available.

AUTHORITY NOTE: Promulgated in accordance with R.S. 40:1664.2.

HISTORICAL NOTE: Promulgated by the Department of Public Safety and Corrections, Office of State Fire Marshal, LR 17:273 (March 1991), amended LR 26:1336 (June 2000), LR 33:1677 (August 2007).

§3043. Enforcement

A. The State Fire Marshal or his designated representative, shall make, or cause to be made, from time to time, inspections of a firm's physical locations, vehicles or job sites to verify required certificates, employee lists, employee licenses, business records and insurances, equipment, tools, NFPA codes, standards and manufacturer's manuals and work/service performed, and as circumstances dictate, to determine that portable fire extinguisher, fire hose, fixed fire suppression and fire detection and alarm firms and their employees are engaging in activity in accordance with the requirements of R.S. 40:1664 et seq., and these rules.

B. The State Fire Marshal shall investigate all complaints of alleged violations of R.S. 40:1574 et seq., 40:1664.1 et seq., and these rules. Complaints of alleged violations shall be made in writing to the Licensing Section of the State Fire Marshal's office. The office shall make available a complaint form to be used as needed. Penalties shall be administered to those firms and /or employees found

to have violated these laws and/or rules. Proposed administrative penalty letters shall act as official notification of alleged violations.

AUTHORITY NOTE: Promulgated in accordance with R.S. 40:1664.2.

HISTORICAL NOTE: Promulgated by the Department of Public Safety and Corrections, Office of State Fire Marshal, LR 17:273 (March 1991), amended LR 26:1337 (June 2000), LR 33:1678 (August 2007).

§3045. Administrative Actions

A. The State Fire Marshal may refuse the issuance or renewal of, suspend, or revoke a certificate of registration, or license and impose administrative penalties, if, after notice and hearing, as provided for by the Administrative Procedures Act, it is found that a person, certified firm, or licensee or an applicant for registration, or license, failed to comply with the provisions of R.S. 40:1664.1 et seq., or these rules.

1. Offenses. The following categories shall denote classification of offenses for persons, firms and employees for determining the penalty to be imposed.

a. Minor:

i. failing to notify the Office of State Fire Marshal of any changes that affect licensure;

ii. failing to adhere to the tagging and/or notification policies of the Office of State Fire Marshal;

iii. working with an expired (31-45 days) license, or certificate of registration;

iv. failing to properly display a firm certificate or an individual license.

b. Serious:

i. misrepresenting oneself and/or one's firm to a customer, prospective customer or to employees of the State Fire Marshal, his designated representative or other public official;

ii. certifying, hydrostatically testing, inspecting, installing, integrating, maintaining or servicing fire protection systems and/or equipment contrary to plans submitted for review, applicable NFPA codes, standards, and/or manufacturer's specifications without specific written permission from the Office of State Fire Marshal;

iii. working an apprentice, or as an apprentice, without direct supervision by a technician licensed to perform the work being done and licensed to the same firm;

iv. working an employee without the appropriate endorsement of license;

v. working without the appropriate endorsement of firm certificate or license;

vi. working with an expired (46-60 days) license or firm certificate;

viii. contracting to a firm or person who is not properly certified or licensed through the Office of State Fire Marshal to perform acts regulated by the provisions of R.S. 1664.1 et seq. or these rules;

ix. failing to possess the equipment, tools, NFPA codes, standards or manufacturer's U.L. listed installation and service manuals to properly certify, hydrostatic test, inspect, install, integrate, maintain or service the systems or equipment for which a firm is certified;

x. committing five or more Minor offenses within a three year period.

c. Major:

i. charging a customer for work that was not performed;

ii. impersonating the state fire marshal, his designated representative or any other public official;

iii. intimidating or coercing a customer;

iv. falsifying an application or any other document submitted to obtain a certificate or license or other documentation requested by or submitted to the Office of State Fire Marshal;

v. falsifying tags, labels, stenciling, inspection reports, invoices and/or other documents;

vi. working without any or with a suspended firm certificate of registration or license;

vii. working an employee with a suspended license;

viii. aiding and abetting an unlicensed person or firm in the certifying, hydrostatic testing, inspecting, installing, integrating, maintaining or servicing of a portable fire extinguisher, fire hose, fixed fire suppression equipment and/or system, fire detection and alarm equipment and/or system;

ix. installing a fixed fire suppression system, or fire alarm and detection system prior to submitting plans and required documentation and receiving authorization to install such system from the Plan Review Section of the Office of State Fire Marshal;

x.. committing three or more serious offenses within a three year period;

xi. engaging in false, misleading or deceptive acts or practices.

2. Penalties. The following fine schedule shall be used to assess fines to persons, firms, and/or employees who violate the laws and rules governing the portable fire extinguisher, fire hose, fixed fire suppression and fire detection and alarm industries. Penalties will be imposed to persons, firms and/or employees based on the classification of offense. Each classification of offense will have a minimum and maximum fine shown and any other administrative penalty that may be imposed.

a. Firms and/or Persons

i. Minor—$50 fine to $250 fine and/or official warnings may be imposed.

ii. Serious—$250 fine to $1,000 fine and/or suspensions of up to 90 days may be imposed.

iii. Major—$1,000 fine to $5,000 fine and/or suspensions from 91 to 365 days may be imposed and/or revocation of certificate may be imposed.

b. Employees and/or Persons

i. Minor—$10 fine to $50 fine and/or official warnings may be imposed.

ii. Serious—$50 fine to $500 fine and/or suspensions of up to 90 days may be imposed.

iii. Major—$500 to $5,000 fine and/or suspensions from 91 to 365 days may be imposed and/or revocation of license may be imposed.

c. The State Fire Marshal may deviate from this fine schedule where circumstances and/or evidence warrant a more stringent or more lenient penalty.

d. In lieu of fine payments, the State Fire Marshal may require remedial or additional training be obtained by those found in violation.

e. Those offenses not enumerated in this list shall receive penalties for violations of similar nature.

f. The Office of State Fire Marshal may also pursue criminal charges or injunctive relief for any of the above enumerated offenses.

AUTHORITY NOTE: Promulgated in accordance with R.S. 40:1664.2.

HISTORICAL NOTE: Promulgated by the Department of Public Safety and Corrections, Office of State Fire Marshal, LR 17:273 (March 1991), amended LR 26:1337 (June 2000), LR 33:1678 (August 2007).

§3047. Severability

A. If any provision of these rules or the application thereof to any firm, person, employee or circumstance is held invalid for any reason, the invalidity shall not affect the other provisions or any other application of these rules which can be given effect without the invalid provisions or application. To this end, all provisions of these rules are declared to be severable.

AUTHORITY NOTE: Promulgated in accordance with R.S. 40:1664.2.

HISTORICAL NOTE: Promulgated by the Department of Public Safety and Corrections, Office of State Fire Marshal, LR 17:273 (March 1991), amended LR 26:1338 (June 2000), LR 33:1679 (August 2007).

§3049. Adopted Standards

A. The office adopts by reference in their entirety those copyrighted codes or standards enumerated in LAC 55:V.103 published by and available from the National Fire Protection Association, Inc. (NFPA), Batterymarch Park, Quincy, Massachusetts, 02268. A copy of the codes and standards shall be kept available for public inspection in the Office of State Fire Marshal. In addition to those listed standards, the following shall also be adhered to as applicable:

1. ASME/ANSI A17.1—Safety Code for Elevators and Escalators;

2. ASME/ANSI A17.3—Safety Code for Existing Elevators and Escalators;

3. ASME/ANSI A117.1—Specifications for Handicapped Accessibility;

4. ADAAG—American Disability Accessibility Act Guidelines;

5. United States Department of Transportation;

6. Code of Federal Regulations 49.

AUTHORITY NOTE: Promulgated in accordance with R.S. 40:1664.2.

HISTORICAL NOTE: Promulgated by the Department of Public Safety and Corrections, Office of State Fire Marshal, LR 17:273 (March 1991), amended LR 26:1339 (June 2000), LR 33:1679 (August 2007).

§3051. National Recognized Testing Laboratory

A. The criteria for recognition by the Office of State Fire Marshal as a "Nationally Recognized Testing Laboratory" shall be as follows. The applicant laboratory's portable fire extinguisher testing standards shall meet or exceed the best listed national standards:

1. Fire Test Standards—ANSI/UL 154, CAN4-S503-M83

2. Performance Standards

a. CO_2 Types—ANSI/UL 154, CAN4-S503-M83

b. Dry Chemical Types—ANSI/UL 299, ULC-S504

c. Halon Types—ANSI/UL 1093, ULC-S504

d. 2-1/2 Gallon Stored Pressure Water Types—ANSI/UL 626

e. Factory Follow-Up on Third Party Certified Portable Fire Extinguishers—ANSI/UL 1803

f. Foam Types—ANSI/UL 8

B. The applicant laboratory shall maintain a follow-up inspection program to confirm that the manufacturer is providing the controls, inspections, and tests necessary to assure that all current manufactured extinguishers will meet the laboratory's testing standards. This follow-up inspection shall occur no less than once each six months for the first two years and once each year thereafter.

1. The application by a testing laboratory for recognition by the State Fire Marshal as a "nationally recognized testing laboratory" shall not be on any particular form but shall include all of the information and material requested in Subparagraphs below:

a. the address and telephone number of the main facility and all branch offices;

b. a current organizational chart showing the relationship between administration, operation, and quality control;

c. resumes of the education and experience of key personnel;

d. a floor plan of the main facility and all branch offices indicating location of the equipment used for testing portable fire extinguishers;

e. a list of all equipment used to test portable fire extinguishers, identified by manufacturer, model number and serial number; detailed plans and specifications shall be submitted on any testing equipment fabricated by the applicant;

f. procedures for selecting, receiving, storage, handling, and shipping of test specimens;

g. test standards and procedures most frequently used;

h. method and frequency of test equipment calibration;

i. procedure for safekeeping of records and files;

j. copies of all data sheets and test report forms;

k. facsimiles of all contracts executed between the testing laboratory and portable extinguisher clients;

l. procedure for periodic updating of the report;

m. method of distributing test reports and certifications, including an indication of who may obtain copies of the final reports and how the reports may be obtained;

n. a copy of the laboratory's partnership agreement, if a partnership, or of the articles of incorporation, if a corporation, and a copy of any by-laws;

o. a list of all the portable fire extinguishers presently listed by the testing laboratory showing the manufacturer and the model number;

p. copies of the test reports on all listed portable extinguishers which must be in sufficient detail to provide for complete verification and evaluation of the operations and objectives, and must include the signature of personnel performing the test and must also include the name of the supervisory engineer;

q. whether the applicant testing laboratory has been recognized as a "nationally recognized testing laboratory" by any other state or by an organized, voluntary recognized organization such as the National Voluntary Laboratory Association Program and whether recognition by any other state or organization has been denied;

r. how long the applicant testing laboratory has tested portable extinguishers;

s. a notarized statement of independence which shall state that, with reference to the laboratory's testing of portable fire extinguishers:

i. there are no managerial affiliations with any producer, supplier, or vendor;

ii. changes in any major test equipment;

iii. establishment of a new branch office or facility at which portable fire extinguishers are to be tested;

iv. changes in principal officers, key supervisory personnel, or key testing personnel in the company.

C. This office approves Underwriters Laboratories, Inc., Factory Mutual Research Corporation and the United States Testing Company, Inc., as nationally recognized testing laboratories for the purpose of these rules.

AUTHORITY NOTE: Promulgated in accordance with R.S. 40:1664.2.

HISTORICAL NOTE: Promulgated by the Department of Public Safety and Corrections, Office of State Fire Marshal, LR 17:273 (March 1991), amended LR 26:1339 (June 2000), LR 33:1679 (August 2007).

§3053. Equipment and Facilities

A. Each certified firm location shall be required to possess the equipment, tools, NFPA codes, standards and manufacturer's UL listed installation and service manuals necessary to properly certify, hydrostatic test, inspect, install, integrate, maintain or service the systems or equipment for which it is certified. If such work is performed from a vehicle, then the vehicle shall be required to possess the necessary equipment, tools, NFPA codes, standards and manuals. Required codes, standards and manuals may be either in print or in an electronic format.

B. The following equipment and code books shall be required depending upon the firm's certification endorsement.

1. Portable Fire Extinguisher/Fire Hose:

a. service and impairment tags;

b. six year maintenance and hydrostatic test labels;

c. external verification collars;

d. stenciling tools and supplies;

e. tamper seals (14 lbs. maximum breakage). the tamper seal shall reflect the current or previous calendar year date when installed;

f. test apparatus including appropriate adapters, fittings and tools;

g. facilities for leak testing of pressurized extinguishers;

h. approved equipment for drying cylinders;

i. approved closed recovery unit;

j. department of agriculture approved scales for unit measure (for shop or vehicle). Scales shall be certified annually by the Department of Agriculture or its designated agent;

k. field and cartridge scales;

l. appropriate recharge agents and fill funnels;

m. cylinder inspection light;

n. dry nitrogen cylinders, regulator and calibrated gauges for pressurizing cylinders;

o. supply of spare parts for respective manufacturers and type of fire extinguishers serviced;

p. proper wrenches with non-serrated jaws or valve puller (hydraulic or electric);

q. continuity tester and labels;

r. calibrated gauges and gauge tester;

s. working hydrostatic test pump for testing cylinders and fire hose, with flexible connection, check valves and fittings;

t. adequate safety cage for hydrostatic testing of low pressure cylinders.

2. Fixed, Pre-Engineered or Kitchen Fire Suppression:

a. service, partial impairment (optional) and impairment tags;

b. installation tags;

c. six year maintenance and hydrostatic test labels;

d. external verification collars;

e. tamper seals (14 lbs. maximum breakage). The tamper seal shall reflect the current or previous calendar year date when installed;

f. test apparatus including appropriate adapters, fittings and tools;

g. facilities for leak testing of pressurized cylinders;

h. approved equipment for drying cylinders;

i. approved closed recovery unit;

j. Department of Agriculture approved scales for unit measure. Scales shall be certified annually by the Department of Agriculture or its designated agent;

k. appropriate recharge agents and fill funnels;

l. cylinder inspection light;

m. dry nitrogen cylinders, regulator and calibrated gauges for pressurizing cylinders;

n. supply of spare parts for respective manufacturers and type of systems serviced;

o. proper wrenches with non-serrated jaws or valve puller (hydraulic or electric);

p. wire cutters;

q. pipe threader;

r. pipe reamer;

s. flaring tools;

t. pipe wrenches;

u. calibrated gauges and gauge tester;

v. working hydrostatic test pump, with flexible connection, check valves and fittings;

w. adequate safety cage for hydrostatic testing of low pressure cylinders;

x. manometer (for engineered systems only);

y. fan test equipment or have access to such equipment through contract to another firm (for engineered systems only);

z. halon recovery equipment or have access to such equipment through contract to another firm (for Engineered Systems only).

3. Fire Alarms:

a. service, partial impairment (optional) and impairment tags;

b. installation tags;

c. manufacturer approved smoke detector sensitivity or calibration testing equipment or have access to such equipment through contract to another firm;

d. multimeter;

e. sound level meter.

4. DOT Hydrostatic Testing:

a. adequate hydrostatic test equipment for high pressure testing and calibrated cylinder including but not limited to appropriate adapters, fittings and tools;

b. adequate equipment for test dating high pressure cylinders (over 900 PSI). Die stamps must be a minimum of l/4 inch;

c. clock with sweep second hand on or close to hydrostatic test apparatus;

d. equipment for drying cylinders;

e. cylinder inspection light;

f. proper wrenches with non-serrated jaws or valve puller (hydraulic or electric).

5. Code Books (latest edition as enumerated in LAC 55:V.103 and these rules)

a. Portable Fire Extinguisher/Fire Hose—NFPA 10, 101, 1961 and 1962.

b. Fixed Fire Suppression—NFPA 11, 11A, 12, 12A, 17, 17A, 96, 101 and 2001.

c. Pre-Engineered—NFPA 11, 11A, 12, 12A, 17, 17A, 96, 101 and 2001.

d. Kitchen Suppression—NFPA 17, 17A, 96 and 101.

e. Fire Alarm—NFPA 70 (only those articles that address fire alarm wiring), 72, 90A, 90B and 101.

f. Fire Alarm (non-required)—NFPA 70 (only those articles that address fire alarm wiring), 72, 90A, 90B and 101.

g. Fire Alarm Owner—NFPA 70 (only those articles that address fire alarm wiring), 72, 90A, 90B and 101.

h. DOT Hydrostatic Testing—CFR 49, NFPA 1961 and 1962.

C. The State Fire Marshal or his representative may inspect a firm's physical location(s) or vehicle(s) to ensure the proper equipment, tools, NFPA codes, NFPA standards, manufacturer's UL listed installation and service manuals and business records and insurances are possessed by the firm. Firms must possess all applicable manufacturers' installation and service manuals for the systems and/or equipment it services.

D. Business records shall include, but not be limited to, invoices, work orders, service reports, payroll records, federal and state tax information for employees, occupational licenses, income tax filings, property tax notifications and filings, utility records, certificates of insurance for general liability and workmen compensation coverage and workers compensation reports and/or filings.

E. The State Fire Marshal or his representative may require that a firm or its employee(s) demonstrate a proficiency to use the necessary equipment to properly certify, hydrostatically test, inspect, install, integrate, maintain or service portable fire extinguishers, fixed fire suppression systems/equipment and fire detection and alarm systems/equipment. Proficiency shall be deemed to be achieved if the system or equipment complies with the applicable NFPA code or standard and/or manufacturer's specifications.

F. For those firms or their employee(s) which do not possess the proper equipment, tools and manuals or who fail to demonstrate the ability to properly perform the required work, then an order of correction shall be made to the contractor or his employee to obtain the required equipment, tools, NFPA codes, standards or manual or to obtain additional training within a 30-day period. Another inspection shall be conducted by the State Fire Marshal or his representative to verify compliance with the order of correction. Good cause must be shown if proficiency is not shown or the required equipment, tools, NFPA codes, standards or manuals are not obtained by the time of the second inspection. Additional time may be granted for good cause. If good cause is not shown, then administrative action may be pursued.

G. The office may specifically enumerate additional required equipment or business records at a later date should it be deemed necessary.

AUTHORITY NOTE: Promulgated in accordance with R.S. 40:1664.2.

HISTORICAL NOTE: Promulgated by the Department of Public Safety and Corrections, Office of State Fire Marshal, LR 17:273 (March 1991), amended LR 26:1339 (June 2000), LR 33:1680 (August 2007).

§3055. Plan Review

A. No system requiring plan submittal in accordance with R.S. 40:1574 et seq., shall be installed or integrated prior to submitting plans with required documentation and receiving authorization to install such system from the Plan Review Section of the Office of State Fire Marshal. However, the installation of wiring only for fire detection and alarm systems shall be permitted upon receipt of plans by the Office of State Fire Marshal, Plan Review Section. No fire detection devices or panels shall be installed prior to review or written authorization by the Office of State Fire Marshal.

B. Only listed qualifiers of a firm shall be listed on applications for full plan review or exemption to full plan review. Additionally, any correspondence regarding a submittal, to include but not be limited to, telephone, email or written correspondence, shall only be through a listed qualifier of the firm, owner of the firm, a professional of record or owner of the building.

AUTHORITY NOTE: Promulgated in accordance with R.S. 40:1664.2.

HISTORICAL NOTE: Promulgated by the Department of Public Safety and Corrections, Office of State Fire Marshal, LR 17:273 (March 1991), amended LR 26:1340 (June 2000), LR 33:1681 (August 2007).

§3057. Electrical Contractors

A. All electrical contractors who have met all requirements and passed a prescribed written examination based upon National Fire Protection Association (NFPA) Code 70, the National Electrical Code, that has been given either by a recognized political subdivision of the state of Louisiana or by the State Licensing Board for Contractors, shall be authorized to install fire detection and alarm components or interconnected smoke detectors in accordance with manufacturer's specifications and applicable National Fire Protection Association (NFPA) codes which are listed in Section 3053 of this Chapter.

B. The certifying, inspecting, integrating, maintenance and servicing of a fire detection and alarm system shall be performed only by a fire detection and alarm firm that is certified, and its employees licensed with the Office of State Fire Marshal to perform such work.

C. Electrical contractors shall be limited to the installation of wiring, conduit raceways, and/or devices for fire detection and alarm systems. All connections or final terminations made within the alarm control panel must be made by licensed employees of the fire detection and alarm firm.

AUTHORITY NOTE: Promulgated in accordance with R.S. 40:1664.2.

HISTORICAL NOTE: Promulgated by Department of Public Safety and Corrections, Office of State Fire Marshal, LR 26:1340 (June 2000), amended LR 33:1682 (August 2007).

§3059. Miscellaneous Provisions

A. Marking of Vehicles. All service vehicles owned or operated by firms or their employees used for regulated activities, as defined by R.S. 40:1664.1 et seq., and these rules shall have the firm name and firm certificate number permanently inscribed, painted, stenciled or affixed by magnetic means on such vehicles. Such markings shall be a minimum of 2 1/2 inches in height and not less than 1/4 inch in width. Letters and numbers shall be on a contrasting background and be conspicuously seen from the outside of the vehicle.

B. Restrictions

1. Certificate or license holders are not agents or representatives of the state of Louisiana, the Department of Public Safety or the Office of State Fire Marshal. No claims or inferences of such shall be made.

2. A certificate or license does not authorize anyone to enforce these rules or to enter any building without the owner's permission or to certify, service, hydrostatically test, inspect, install integrate, or maintain fire protection equipment and/or systems without the owner's permission.

3. Certificate and license holders shall not allow the use of their certificate or licenses by other firms, persons or employees.

4. A certificate or license holder shall not perform any activity relating to portable fire extinguishers, fire hoses, fixed fire suppression equipment/system, or fire detection and alarm equipment/systems unless employed by and within the course and scope of that employment with a firm regulated by the provisions of R.S.40:1664.1 et seq.

5. A person shall not perform any act for which a certificate or license is required unless he is:

a. first certified or licensed to perform such acts; and

b. employed by a firm certified to perform those acts; and

c. performing those acts for the certified firm by which he is employed.

6. An apprentice, as defined in these rules, shall not perform any activity regulated by R.S.40:1664.1 et seq., unless employed by a certified firm and is supervised by a license holder authorized to perform such act or acts. Both the apprentice and licensee shall be employed by the same certified firm.

7. Nothing in these rules shall prevent an appropriately licensed firm or person from certifying, hydrostatically testing, inspecting, installing, integrating, maintaining or servicing any manufacturer's portable fire extinguishers, fire hose, fixed fire suppression equipment and/or systems or fire detection and alarm equipment and/or systems.

C. Multiple Names. A firm which uses multiple names must apply for a separate certificate of registration if each named firm has a separate state or federal tax number. All "doing business as" names shall be registered with this office at the time of application.

D. Required Inspection

1. The following shall be the building owner's responsibility.

a. Portable fire extinguishers shall be certified annually by a firm with a Portable Fire Extinguisher/Fire Hose endorsement.

b. Pre-engineered fixed fire suppression systems shall be certified at a minimum annually by a firm with either a Fixed Fire Suppression System endorsement or Pre-Engineered Fixed Fire Suppression endorsement. If the suppression system includes electronic fire detection devices, then the firm must also have the appropriate Fire Alarm endorsement or contract to a firm with such.

c. Engineered fixed fire suppression systems shall be certified at a minimum annually by a firm with a Fixed Fire Suppression System endorsement. If the suppression system includes electronic fire detection devices, then the firm must also have the appropriate Fire Alarm endorsement or contract to a firm with such.

d. Clean Agent Gas (Halon 1301 Replacement) fixed fire suppression systems shall be certified at a minimum every six months by a firm with a Fixed Fire Suppression System endorsement and the appropriate Fire Alarm endorsement or contract to a firm with such.

e. Kitchen fixed fire suppression systems shall be certified at a minimum every six months by a firm with either a Fixed Fire Suppression System endorsement, or a Pre-Engineered Fixed Fire Suppression endorsement, or a Kitchen Fixed Fire Suppression System endorsement. If the suppression system includes electronic fire detection devices, then the firm must also have the appropriate Fire Alarm endorsement or contract to a firm with such.

f. Fire alarm and detection systems shall be certified at a minimum annually by a firm with a Fire Alarm endorsement for required fire alarm systems and a Fire Alarm or Fire Alarm (non-required) endorsement for non-required fire alarm systems.

g. Fire hoses shall be certified at a minimum annually by a firm with a Portable Fire Extinguisher/Fire Hose endorsement or a fire protection sprinkler contractor as outlined by R.S.40:1664.1 et seq.

2. For the purpose of determining the exact date of a required certification, inspection or service, the following guidelines shall apply. Where only the year is known but not the month, January shall be used for the month, where the month is known but not the day, the first day of the month shall be used.

3. The certified firm shall not be responsible for more frequent inspections as required by the applicable engineered specifications, manufacturer's specifications or per the inspection, testing and maintenance chapters as set forth in the applicable NFPA codes and standards unless under contract to perform such.

E. Advertising. All advertising, including but not limited to telephone advertising, shall indicate a firm's certificate of registration number.

F. Service Invoices and Inspection Reports. All service invoices or inspection reports shall reflect the inspection, installation, maintenance, or service performed, all parts replaced, date of service and the technician who performed the work.

AUTHORITY NOTE: Promulgated in accordance with R.S. 40:1664.2.

HISTORICAL NOTE: Promulgated by Department of Public Safety and Corrections, Office of State Fire Marshal, LR 26:1341 (June 2000), amended LR 33:1682 (August 2007).

Chapter 31. Fire Sprinkler Systems and/or Equipment and Fire Hose Rules

§3101. Purpose

A. The purpose of these rules is to regulate the activity of certifying, hydrostatic testing, inspecting, installing, maintaining, planning or servicing of commercial fire sprinkler equipment and/or systems in the interest of protecting and preserving lives and property pursuant to authority of R.S. 40:1664.1 et seq.

AUTHORITY NOTE: Promulgated in accordance with R.S. 40:1664.2 et seq.
HISTORICAL NOTE: Promulgated by the Department of Public Safety and Corrections, Office of State Fire Marshal, LR 35:677 (April 2009).

§3103. Applicability of Rules

A. These rules shall apply to all firms and persons engaged in the activity of certifying, hydrostatic testing, inspecting, installing, maintaining, planning or servicing of commercial fire sprinkler systems/equipment.

AUTHORITY NOTE: Promulgated in accordance with R.S. 40:1664.2 et seq.
HISTORICAL NOTE: Promulgated by the Department of Public Safety and Corrections, Office of State Fire Marshal, LR 35:677 (April 2009).

§3105. Exceptions

A. These rules shall not apply to firms and/or persons engaging in the activity of certifying, hydrostatic testing, inspecting, installing, integrating, or servicing fire sprinkler systems/equipment in one or two family dwellings.

AUTHORITY NOTE: Promulgated in accordance with R.S. 40:1664.2 et seq.
HISTORICAL NOTE: Promulgated by the Department of Public Safety and Corrections, Office of State Fire Marshal, LR 35:677 (April 2009).

§3107. Notices by the Fire Marshal

A. Any notice required to be given by the State Fire Marshal by any provision of R.S. 40:1664.1 et seq., or these rules must be given by personal or domiciliary service or mailed, postage prepaid, to the person's residence or firm address or agent of service as it appears on the records in the Office of State Fire Marshal. It is the responsibility of the person or firm involved to assure that the Office of State Fire Marshal has a correct address for the person or firm.

AUTHORITY NOTE: Promulgated in accordance with R.S. 40:1664.2 et seq.
HISTORICAL NOTE: Promulgated by the Department of Public Safety and Corrections, Office of State Fire Marshal, LR 35:677 (April 2009).

§3109. Certificate, License Required

A. Each firm engaged in the activity of certifying, hydrostatic testing, inspecting, installing, maintaining, planning or servicing of commercial fire sprinkler systems/equipment shall apply for a certificate of registration in the endorsements of certification desired in accordance with these rules prior to conducting any such activity in this state.

B. Each person or employee engaged in the activity of certifying, hydrostatic testing, or inspecting of commercial fire sprinkler systems/equipment shall apply for a license in the endorsements of licensure desired in accordance with these rules prior to conducting any such activity in this state.

C. Any firm and/or person described in Subsection A or B of this Section, which has not applied for and received a current and valid certificate of registration or license, shall immediately cease such activities. The Office of State Fire Marshal shall take all steps necessary to enforce an order to cease and desist.

AUTHORITY NOTE: Promulgated in accordance with R.S. 40:1664.2 et seq.
HISTORICAL NOTE: Promulgated by the Department of Public Safety and Corrections, Office of State Fire Marshal, LR 35:677 (April 2009).

§3111. Definitions

A. The following words and terms, when used in these rules, shall have the following meanings, unless the context clearly indicates otherwise.

Activity—the act of certifying, hydrostatic testing, inspecting, installing, maintaining, planning or servicing of commercial fire sprinkler equipment and/or systems and/or fire hoses pursuant to R.S.40:1664.1 et seq.

Certificate of Registration—that document issued by the State Fire Marshal to a firm authorizing it to engage in such activities as defined in these rules.

Certify—to attest to the proper functionality, or hydrostatic testing, or inspection, or installation, or maintenance, or service, or testing of fire sprinkler systems/equipment in accordance with manufacturer's specifications and per the inspection, testing and maintenance chapters as set forth in the applicable NFPA codes and standards.

Contact Person—that individual designated by a firm to act as liaison with the Office of State Fire Marshal.

Fire Hose—a flexible conduit used to convey water.

Fire Sprinkler Systems/Equipment—a commercial fire sprinkler system consisting of underground and above ground piping and valves designed to suppress fire by means of water discharge through system piping and sprinkler heads. Fire sprinkler equipment includes but is not limited to standpipes, fire pumps, and hose stations in commercial occupancies. Fire sprinkler systems/equipment is governed by the provisions of NFPA 11, 11A, 13, 13D, 13R, 14, 15, 16, 20, 22, 24, 25, 1961 and 1962.

Firm—a sole proprietorship, partnership, corporation, limited liability company or any other entity. For the purpose of these rules the term *firm* shall also mean *fire sprinkler contractor* as used in R.S.40:1664.1 et seq.

Foreman—an employee designated by a sprinkler firm, who certifies an installation, or service work, or completes

the acceptance test, or identifies impairments of fire sprinkler equipment and/or system.

Hydrostatic Testing—pressure testing fire sprinkler equipment and/or systems or fire hoses by approved hydrostatic methods and in accordance with NFPA codes.

Inspection—the act of visually checking the physical condition and placement of fire sprinkler equipment and/or systems or fire hoses and/or certifying the same for functional performance in accordance with all applicable engineered specifications, manufacturer's specifications and per the inspection, testing and maintenance chapters as set forth in the applicable NFPA codes and standards.

Inspector—an individual licensed pursuant to R.S. 40:1664.1 et seq., and these rules that certifies, inspects or performs hydrostatically testing of fire sprinkler equipment and/or systems or fire hoses.

Installation—the initial placement of a fire sprinkler system or an extension, or alteration after initial placement.

License—that document issued by the State Fire Marshal to an employee of a certified firm authorizing the employee to be a qualifier or inspector as defined by these rules.

Maintenance—repair service, including periodically recurrent inspections and tests, required to keep fire protection equipment/systems and fire sprinkler systems and their components in an operable condition at all times, together with replacement of the equipment/system or of its components, when for any reason they become undependable or inoperable.

Nationally Recognized Testing Laboratory—a nationally recognized testing company concerned with product and service evaluation, which, after conducting successful examinations, inspections, tests and reexaminations, reflects approval by various labeling, listing and classification actions.

NFPA—the National Fire Protection Association, Inc., a nationally recognized standards-making organization.

Non-Conforming—a system or component of a system which does not comply with applicable NFPA codes or standards.

Non-Required—a system or component of a system which is not required by the applicable occupancy chapter of NFPA 101 (Life Safety Code).

Office—Office of State Fire Marshal.

Operating Location—a physical office from which the acts authorized by the certificate of registration are performed.

Person—a natural individual, including any owner, manager, officer, or employee of any firm.

Planning—the laying out a fire sprinkler system by a qualifier for installation in a commercial occupancy for protecting the occupants and structure from fire.

Pocket License—that document issued by the State Fire Marshal to an employee of a certified firm, in pocket size and bearing a photographic image of the licensee, authorizing the employee to engage in the activities as defined by these rules.

Principal—*Principal* means a person or entity that owns at least five percent of a life safety and property protection contracting firm regardless of the form of organization. *Principal* includes a person or entity entitled to exercise the prerogatives or indicia of ownership or control of a life safety and property protection contracting firm whether by direct action, assignment, or any other kind of substitution or subrogation, to the extent that such person or entity would be entitled to receive at least 5 percent of the remaining assets of the life safety and property protection contracting firm upon dissolution. *Principal* includes, if the entity is a partnership, each partner, including any general or limited partner. *Principal* includes, if the entity is organized as a corporation, any person or entity who owns or controls five percent or more of the total aggregate number of shares of all types of stock issued by a life safety and property protection contracting firm organized as a corporation or shares of a corporation that owns or controls a life safety and property protection contracting firm. *Principal* includes any member if the entity is organized as a limited liability company.

Qualifying Person—the employee of a firm who plans fire sprinkler systems.

Required—a system or component of a system which is required by the applicable occupancy chapter of NFPA 101 (Life Safety Code).

Residential Fire Sprinkler System—a fire sprinkler system consisting of underground and above ground piping and valves designed to suppress fire by means of water discharge through system piping and sprinkler heads within a one or two family dwelling.

Service—the act of repair or replacement of fire sprinkler systems or their components to ensure the proper functioning of the equipment/system.

Sprinkler Firm Employee—one who works for a firm for which a certificate is issued as required by R.S.40:1664.1 et seq., in return for financial or other compensation. For the purposes of these rules, only qualifiers, inspectors and foremen are considered employees. Also where the term *employee* is used in the body of these rules, it refers to *sprinkler firm employee*.

AUTHORITY NOTE: Promulgated in accordance with R.S. 40:1664.1 et seq.

HISTORICAL NOTE: Promulgated by Department of Public Safety and Corrections, Office of State Fire Marshal, LR 35:677 (April 2009).

§3113. Certification of Firms

A. Every firm must obtain from the State Fire Marshal a certification of registration with the appropriate endorsements as provided for by R.S.40:1664.1 et seq., before engaging in the activity of certifying, hydrostatic

testing, inspecting, installing, maintaining, planning or servicing of commercial fire sprinkler systems/equipment.

1. Each firm, as defined by R.S.40:1664.1 et seq., shall have at least one licensed qualifier and one licensed inspector to perform the act or acts authorized by its certificate.

2. Firms as defined by R.S.40:1664.1 et seq., and their owners shall be responsible for the acts of their agents and employees for the purpose of these rules including the initiation of administrative action by the state fire marshal.

B. The following shall apply to certificates of registration:

1. Posting. Each certificate shall be posted conspicuously at each firm and/or branch office premises. All firms without a physical location in this state shall be required to purchase a duplicate certificate to post in each vehicle which will come into this state to do work.

2. Changes of Ownership. The change of a firm's majority ownership invalidates the current certificate. To assure continuance of the firm, an application for a new certificate shall be submitted to the State Fire Marshal within 10 days after such change in ownership.

3. Change of Corporate Officers. Any change of corporate officers must be reported in writing to the State Fire Marshal within 10 days of the change. This change does not require a revised certificate.

4. Duplicates. A duplicate certificate must be obtained from the State Fire Marshal to replace a lost or destroyed certificate. The firm must submit written notification of the loss or destruction within 10 days, accompanied by the required fee specified in these rules.

5. Revisions/Changes. The change of a firm's name, location, or mailing address or operating status requires a revision of the certificate of registration. Certificates of registration requiring changes must be surrendered to the State Fire Marshal within 10 days after the change requiring the revision. The firm must submit written notification of the change with the surrendered certificate of registration, accompanied by the required fee specified in by R.S. 40:1664.1 et seq.

6. Non-Transferability. A certificate of registration is not transferable from one firm to another.

7. Validity. A certificate of registration is valid for one year from date of issue, and must be renewed annually.

AUTHORITY NOTE: Promulgated in accordance with R.S. 40:1664.2 et seq..

HISTORICAL NOTE: Promulgated by the Department of Public Safety and Corrections, Office of State Fire Marshal, LR 35:678 (April 2009).

§3115. Licensure of Qualifiers and Inspectors

A. Required. Each employee of a certified firm desiring to act as an inspector or qualifier for the firm shall have a current and valid license issued by the State Fire Marshal.

B. Types of Licenses. Each license shall be identified by class, which indicates the authorized act or acts which may be performed by the licensee.

C. Posting. It is not necessary to post an employee license on a wall. A master list of all employees' names and license numbers must be kept at each office location and must be available for review upon request by the State Fire Marshal or his designated representative.

D. Pocket Identification Card. The pocket ID card is for immediate identification purposes only and shall be on the holder's at all times when conducting fire sprinkler work in the field. The pocket ID card need not be visibly displayed when working in areas where the card may be damaged or lost. The pocket ID card must still be available for inspection upon request.

E. Duplicate License or Pocket Identification Card. A duplicate license or pocket ID card must be obtained from the State Fire Marshal to replace a lost or destroyed one. The holder and his employer must submit written notification within 10 days of the loss or destruction of a license or pocket ID card, accompanied by the required fee as specified in these rules.

F. Revised Licenses. The change of a licensee's employer, home address or mailing address or employment status requires a revised license. Licenses requiring revision must be surrendered to the State Fire Marshal within 10 days after the change requiring the revision. The license holder and his employer must submit written notification of the necessary change with the surrendered license, accompanied by the required fee as specified in these rules.

G. Non-Transferable. A license is not transferable from one person to another or from one firm to another.

H. License Reciprocity. The State Fire Marshal may waive any license requirements for an applicant with a valid license from another state having license requirements substantially equivalent to those of this state.

I. Validity. A license is valid for one year from date of issue, and must be renewed annually unless the State Fire Marshal adopts a system under which licenses expire on various dates during the year. Should a staggered renewal system be adopted, the renewal fees shall be prorated on a monthly basis so that each licensee pays only that portion of the fee that is allocable to the number of months during which the license is valid.

AUTHORITY NOTE: Promulgated in accordance with R.S. 40:1664.2 et seq..

HISTORICAL NOTE: Promulgated by the Department of Public Safety and Corrections, Office of State Fire Marshal, LR 35:679 (April 2009).

§3117. Alteration of Certificates or Licenses

A. Any alteration of a certificate of registration or license renders it invalid and such alteration shall be the basis for administrative action in accordance with penalties set forth in R.S.40:1664.1 et seq. and these rules.

AUTHORITY NOTE: Promulgated in accordance with R.S. 40:1664.2 et seq.

HISTORICAL NOTE: Promulgated by the Department of Public Safety and Corrections, Office of State Fire Marshal, LR 35:679 (April 2009).

§3119. Application for Certification of Firms

A. Applications for a certificate of registration for fire sprinkler firms shall be in writing on the forms provided by the State Fire Marshal and accompanied by the required fee as specified in these rules.

B. The application for certificates of registration shall:

1. be executed by the sole proprietor, by each partner of a partnership, or by the authorized officer(s) or manager(s) of a corporation;

2. identify the type of endorsement applied for;

3. identify the physical and mailing address, if different, of the firm;

4. identify any and all names by which the firm may conduct activity regulated by R.S. 40:1664.1 et seq., and these rules;

5. identify each principal of the firm;

6. identify the contact person as defined by these rules;

7. identify the qualifying person(s) for each endorsement applied for;

8. include a separate employee application for each qualifying person along with the required training or certification credentials as established by the Life Safety and Property Protection Advisory Board and an originally signed and notarized employment affidavit. A firm must employ and license at least one qualifier. Multiple qualifiers may be licensed;

9. include a separate employee application for each inspector along with the required training or certification credentials as established by the Life Safety and Property Protection Advisory Board. A firm must employ and license at least one inspector;

10. be accompanied by:

a. a current certificate of insurance issued to the Office of State Fire Marshal showing a minimum of $500,000 coverage;

b. a copy of the local or occupational license for the firm;

11. for out of state firms, include a list of all vehicles which shall come into this state to conduct activity regulated by R.S. 40:1664.1 et seq., and these rules. The list shall include the vehicle's make, model, year and license number.

C. The application shall also include written authorization by the applicant permitting the State Fire Marshal or his representative to enter, examine, and inspect any premise, building, room, vehicle, or establishment used by the applicant while engaged in activity to determine compliance with the provisions of R.S.40:1664.1 et seq., and these rules.

D. When the applicant has completed the requirements contained above, a pre-certification inspection may be conducted at the facilities or of the vehicles of the applicant. Such inspection is to determine that such equipment necessary to perform activities in accordance with the applicable NFPA codes and/or standards, UL or manufacturer's specifications for which the applicant is applying to be certified is on hand. The office may inspect vehicles, equipment, buildings, devices, premises or any area to be used in performing the activities allowed by the certificate of registration. After issuance of a certificate of registration, such facilities may be inspected annually thereafter or as frequently as deemed necessary to ensure that the equipment requirement continues to be met.

AUTHORITY NOTE: Promulgated in accordance with R.S. 40:1664.2 et seq..

HISTORICAL NOTE: Promulgated by the Department of Public Safety and Corrections, Office of State Fire Marshal, LR 35:679 (April 2009).

§3121. Qualifying Persons

A. Each certified firm or each firm seeking certification shall employ at least one qualifying person for each endorsement it is making application for. No fire sprinkler system or equipment shall be certified, hydrostatically tested, inspected, installed, planned, maintained, serviced, or submitted to this office for review if the firm does not employ a qualifying person as provided herein.

B. The qualifying person shall be a paid employee and shall receive a W-2 or K-1 tax form from the firm. The qualifier shall only qualify one firm for which he is employed. An individual may not qualify multiple firms at the same time. A contract employee cannot be used to fulfill this requirement except as provided by Subsection G below. A qualifier must physically reside within 150 miles of the office for which he or she qualifies.

C The qualifying person shall be primarily and actively engaged in direct supervision of the certification, hydrostatic testing, integrating, inspection, installation, maintaining, planning and servicing of those fire protection systems or equipment for which the firm holds an endorsement to work on. If a firm holds multiple endorsements, then multiple qualifiers may be utilized to meet this requirement.

D. A qualifier must meet the minimum examination, certification, or training requirements as established by the Life Safety and Property Protection Advisory Board.

E. Currently, the following requirements have been established:

1. Fire Sprinkler System Endorsement B—a current NICET Certificate, minimum Level III in Automatic Sprinkler System Layout, or a professional engineer currently registered with the Louisiana Board of Professional Engineers with a Mechanical Engineer endorsement.

F. A Louisiana Board of Professional Engineers registered Fire Protection Engineer may substitute for any of the above if documented to be in the appropriate discipline of endorsement.

G. At anytime that a firm finds itself without a qualifying person, such firm shall only be able to continue certifying, hydrostatic testing, inspecting, maintaining, planning and/or servicing existing contractual obligations for that endorsement but shall not engage in any new work until a qualifying person has been employed as provided herein. A firm may not submit plans to the Office of State Fire Marshal when it finds itself without a qualifying person.

H. This office shall be notified in writing within 10 working days anytime a qualifying person's employment is terminated for any reason.

I. A firm which loses its qualifying person and has timely notified the Office of State Fire Marshal shall have 90 days to hire another qualifying person. If after the loss of such an employee, a replacement cannot be found within the 90 days, the firm may make a request to the Office of State Fire Marshal to temporarily hire a qualifying person on a contractual basis. Good cause must be shown why another employee cannot be permanently hired. Approval by the Office of State Fire Marshal for the hiring of a qualifying person on a contractual basis shall not exceed six months. Not later than 30 days prior to the expiration of the six month period, the firm can request an additional six month period to employ a qualifying person on a contractual basis. The Office of State Fire Marshal may grant one additional six month period during which a firm may employ a qualifying person on a contractual basis.

J. Failure to notify this office in writing within 10 working days of the loss of a qualifying person will cause forfeiture of any extension of time to hire another qualifying person.

K. A qualifying person must obtain an individual employee license as required by these rules. Licensure of the qualifier shall include a signed and notarized affidavit indicating the employment relationship and duties of the qualifier. If a firm desires to use multiple qualifiers for submitting plans and supervising installations or service, then it must register and license the additional qualifiers with the Office of State Fire Marshal.

AUTHORITY NOTE: Promulgated in accordance with R.S. 40:1664.2 et seq.

HISTORICAL NOTE: Promulgated by the Department of Public Safety and Corrections, Office of State Fire Marshal, LR 35:680 (April 2009).

§3123. Application for Licenses

A. Applications for a license from an employee of a certified firm shall be on forms provided by the State Fire Marshal and accompanied by the required fee as specified in these rules.

B. Applications for employee licenses shall be accompanied by a written statement from the employer certifying the applicant's competency to certify, hydrostatically test, inspect, maintain or service those systems and/or equipment for which the applicant desires to become licensed.

C. Applications for employee licenses will not be accepted unless accompanied by documentation showing that the applicant has met all competency requirements as determined by the Life Safety and Property Protection Advisory Board.

AUTHORITY NOTE: Promulgated in accordance with R.S. 40:1664.2 et seq.

HISTORICAL NOTE: Promulgated by the Department of Public Safety and Corrections, Office of State Fire Marshal, LR 35:681 (April 2009).

§3125. Fees—General Information

A. Every fee required in accordance with the provisions of R.S. 40:1664.1 et seq., and these rules, shall be paid by firm check or certified funds made payable to the "Office of State Fire Marshal." Cash or personal checks cannot be accepted.

B. Fees shall be paid at or mailed to the Office of State Fire Marshal at 8181 Independence Blvd., Baton Rouge, Louisiana 70806.

C. Late fees are required on all certificates of registration or license holders who fail to submit renewal applications in a timely fashioned as outlined in R.S. 40:1664.1 et seq.

D. A renewal application accompanied by the required renewal fee and deposited with the United States Postal Service is deemed to be timely filed, regardless of actual date of delivery, when its envelope bears a legible postmark date which is on or before the expiration date of the certificate or license being renewed.

E. Certificates or licenses which have been expired for more than 60 days will be suspended and applicants must apply and pay for a new certificate of registration or license.

AUTHORITY NOTE: Promulgated in accordance with R.S. 40:1664.2 et seq.

HISTORICAL NOTE: Promulgated by the Department of Public Safety and Corrections, Office of State Fire Marshal, LR 35:681 (April 2009).

§3127. Fees—Specific Information

A. Certificate of Registration and License Fees

	Initial	Renewal
Firm Certificate Fire Sprinkler	$500	$250
Employees		
Qualifier	$100	$50
Inspector	$100	$50

B. Late Renewal Fee

1. A penalty shall be assessed in accordance with R.S.40:1664.1 et seq., for the late renewal of a certificate of registration or license.

C. Change in ownership—$500.

D. Changes or alterations—$20.

E. Duplicate Certificates of Registration or License—$20.

F. Replacement pocket registration card—$20.

AUTHORITY NOTE: Promulgated in accordance with R.S. 40:1664.2 et seq.

HISTORICAL NOTE: Promulgated by the Department of Public Safety and Corrections, Office of State Fire Marshal, LR 35:681 (April 2009).

§3129. Initial Certification, Continuing Education

A. Initial Certification. Applicants for Qualifier or Inspector initial licenses are required to meet the initial certification requirements as established by the Life Safety and Property Protection Advisory Board.

B. Continuing Education. Applicants for Qualifier or Inspector who wish to renew their licenses are required to meet the continuing education requirements as established by the Life Safety and Property Protection Advisory Board.

AUTHORITY NOTE: Promulgated in accordance with R.S. 40:1664.2 et seq.

HISTORICAL NOTE: Promulgated by the Department of Public Safety and Corrections, Office of State Fire Marshal, LR 35:681 (April 2009).

§3131. Fire Sprinkler Systems Installations and Inspections

A. New fire sprinkler systems/equipment shall be certified, installed, maintained, planned and serviced in compliance with NFPA 11, 11A, 13, 13D, 13R, 14, 15, 16, 20, 22, 24, 25, 101, 1961 and 1962, as applicable and adopted by the Office of State Fire Marshal in LAC-55:V:103 or noted in these rules.

B. Existing fire sprinkler systems/equipment shall be certified, hydrostatically tested and inspected in compliance with NFPA 25, 1961 or 1962, as applicable, as adopted by the Office of State Fire Marshal in LAC-55:V:103 or noted in these rules.

C. A service tag shall be securely attached to each riser upon completion of any work.

D. When a fire hose is found to be in a condition which would not allow hydrostatic testing as described in NFPA 1961 or 1962, as adopted by the Office of State Fire Marshal in LAC-55:V:103 noted in these rules, then the fire hose shall be red tagged or removed from service and destroyed in accordance with the applicable code or standard and these rules.

E. All non-required and non-conforming fire sprinkler systems/equipment shall be planned, certified, inspected, installed, planned, maintained and serviced in compliance with the manufacturer's installation manuals, specifications, and deviations from the applicable codes and standards adopted in LAC-55:V:103 and 3053 as authorized by the Office of State Fire Marshal.

F. Non-required and/or non-conforming fire sprinkler systems/equipment which only comprise of six sprinkler heads or less connected to a domestic water system need not be inspected and certified annually by a certified fire sprinkler system firm. The owner of these systems must ensure these systems are functional and maintained in compliance with the manufacturer's specifications, as provided by R.S.40:1561, et seq., and NFPA 101 as adopted by LAC-55:V:103.

G. All systems, except as noted in Section G above, shall be planned, certified, inspected, installed, planned, maintained and serviced by certified firms having licensed personnel working within their certification and licensing discipline. In cases where disciplines cross over, the following reasoning will prevail.

1. Distribution piping systems as provided for in NFPA 25, as adopted in LAC 55:V:103 will be certified, inspected, installed, planned, maintained and serviced by certified fire sprinkler contractors as regulated by R.S. 40:1664.1 et seq.

2. Underground water supply and distribution piping systems as provided for in NFPA 25, as adopted in LAC 55:V:103 will be certified, inspected, installed, planned, maintained and serviced by certified fire sprinkler contractors or licensed plumbing contractor as regulated by R.S. 40:1664.1 et seq.

3. Foam systems providing foam solution to fire monitors, portable nozzles, or fire trucks are excluded from this rule.

4. Alarm devices such as flow switches, pressure switches, low air pressure switches that are an integral part of the piping system must be installed by certified fire sprinkler contractors as regulated by R.S. 40:1664.1 et seq., and connected to the fire alarm system by a certified fire detection and alarm firm.

H. All non-required or non-conforming systems require written permission and possible review from the Office of State Fire Marshal Plan Review Section prior to installation. Non-conforming systems shall be maintained in a functioning operational state as long as the system is within the facility. Non-required systems shall be maintained in accordance with the inspection, testing, and maintenance chapters of the applicable NFPA codes, standards and manufacturer's specifications governing that particular system as long as the system is within the facility.

AUTHORITY NOTE: Promulgated in accordance with R.S. 40:1664.2 et seq.

HISTORICAL NOTE: Promulgated by the Department of Public Safety and Corrections, Office of State Fire Marshal, LR 35:681 (April 2009).

§3133. Installation Placards

A. Upon installation of any new fire sprinkler system, the system shall have a placard permanently affixed on each riser. The installation placard shall be a minimum of 2 3/4 inches by 2 3/4 inches. Maximum size cannot exceed 5 inches by 5 inches. The following information and wording shall be required to be preprinted on the front side of the tag:

1. DO NOT REMOVE BY ORDER OF THE STATE FIRE MARSHAL (all capital letters, in bold type);

2. installation placard;

3. installation date;

4. firm's name;

5. firm's certificate number;

6. qualifier's name;

7. qualifier's license number;

8. NFPA Code Edition System was installed under;

9. plan review or exemption number;

10. model number and manufacturer of sprinkler valve;

11. model number and date of each type of sprinkler head on system.

B. If after initial installation a sprinkler system is redesigned because of an occupancy change or the main control valve is replaced for any reason, a new installation placard shall be completed and attached as above, noting the appropriate changes in information.

AUTHORITY NOTE: Promulgated in accordance with R.S. 40:1664.2 et seq.

HISTORICAL NOTE: Promulgated by the Department of Public Safety and Corrections, Office of State Fire Marshal, LR 35:682 (April 2009).

§3135. Service Tags, Yellow Tags, Red Tags, and Stenciling

A. All fire sprinkler systems/equipment shall be tagged or stenciled in the following manner.

1. Service Tags

a. A service tag shall be completed and attached to a fire sprinkler system, fire pump and fire hoses after it has been certified, hydrostatically tested, inspected, installed, maintained or serviced indicating all work that has been done. Fire hoses shall be stenciled in ink after being hydrostatically tested.

b. Service tags shall be green in color. Fire hoses shall be stenciled in a contrasting color to that of the hose.

c. The service tag shall be attached at the following locations.

i. For fire sprinkler systems, the tag shall be attached at the riser.

ii. For fire pumps, the tag shall be attached at pump housing cover.

iii. For fire hoses, the tag shall be located at the female coupling.

iv. For standpipes, the tag shall be attached at the main control valve.

v. For fire hoses, the stencil shall be located at both couplings.

d. The service tag shall be attached in such a way as to not hamper the actuation and operation of the equipment or system.

e. A service tag shall be attached on all equipment/systems found to be in proper working condition and which are found to be in an operational condition per the inspection, testing and maintenance chapters of the applicable NFPA codes and standards. This tag shall be used for new installations and shall be in addition to the installation placard provided for in these rules. This tag shall also be used for all service and maintenance where the system is found to meet the above conditions.

f. Service tags must contain all of the information listed below:

i. "DO NOT REMOVE BY ORDER OF THE STATE FIRE MARSHAL" (all capital letters in bold face type);

ii. servicing firm's name, physical address and telephone number;

iii. servicing firm's State Fire Marshal certificate number;

iv. employee's name and State Fire Marshal license number (if applicable) to be printed on tag either at the time of service or preprinted;

v. employee's signature to be signed at time of installation, certification or service (no preprinted signatures nor initials are permitted);

vi. day, month and year in which the installation, certification or service was performed (must be punched through service tag at designated marks for month and year; designated marks for month and year shall only be punched once per tag);

vii. type of work performed. Only "Installation", "Certification", and "Service" shall be noted on tag for type of work performed (must be punched through the service tag):

(a). "Installation" shall be punched on the tag when the fire protection system or equipment is initially placed into service or after an addition or extension to the system has been made. Punching "Installation" indicates the initial certification of the system or equipment has been completed;

(b). "Certification" shall be punched on the tag when the fire sprinkler system or equipment has its annual inspection. Punching "Certification" indicates that any required service performed to the system or equipment at the time has been completed;

(c). "Service" shall be punched on the tag when the fire sprinkler system or equipment is repaired or replaced to ensure proper operation in between required certification periods;

(d). specifics as to the type of work performed shall be noted on rear of tag, (i.e., new installation, annual certification, service, etc);

viii. model number and manufacturer of the sprinkler valve(s);

ix. business owner or tenant and physical address of where the sprinkler system is located (to be noted on rear of tag).

g. Other information may be permitted on the tag after a review and approval by the fire marshal. A request for

additional information shall be made to the fire marshal in writing with a sample tag indicating the requested additions.

h. Stenciled information on fire hoses shall include the test pressure, date of test and firm license number.

2. Partial Impairment Tags (Yellow Tags)

a. All firms engaged in the activity of certifying, hydrostatic testing, inspecting, installing, maintaining, planning or servicing of fire sprinkler system/equipment and fire hoses shall be allowed to have a partial impairment tag, to be yellow in color, which is to be used when minor deficiencies are found on the equipment or system. The partial impairment tag is in addition to the requirement of having a service tag and impairment tag.

b. A partial impairment tag may be placed on all equipment or systems in which there is a deficiency with the equipment or system but where the equipment or system is still functional. This would include situations where routine service is needed but has not been approved by the owner of the equipment or system as well as systems which are required to be off-sited monitored but monitoring is not provided.

c. A partial impairment tag shall not remain on equipment or a system for more than 60 days. If the problem is not corrected after 60 days the certified firm shall be required to notify, in writing, the Office of State Fire Marshal Inspection Section. The sprinkler firm does not have to physically return to the building for re-inspection. The mailing of the impairment notice is sufficient.

d. Partial impairment tags must contain all of the information listed below:

i. "DO NOT REMOVE BY ORDER OF THE STATE FIRE MARSHAL" (all capital letters in bold face type);

ii. servicing firm's name, physical address and telephone number;

iii. fire sprinkler firm's State Fire Marshal certificate number;

iv. employee's name and State Fire Marshal license number (if applicable) to be printed on tag either at the time of service or preprinted;

v. employee's signature to be signed at time of installation, certification or service (no preprinted signatures nor initials are permitted);

vi. day, month and year in which the impairment was found (to be punched through service tag at designated marks for month and year; designated marks for month and year shall only be punched once per tag);

vii. type of impairment found (to be hand written on rear of tag);If additional space is needed to note the impairments, then multiple tags shall be used noting 1 of 2, 2 of 2, etc.;

viii model number and manufacturer of the sprinkler valve;

ix. business owner or tenant and physical address of where the sprinkler system is located (to be noted on rear of tag).

3. Impairment Tags (Red Tags)

a. All firms engaged in the activity of certifying, hydrostatic testing, inspecting, installing, maintaining, planning or servicing of fire sprinkler systems/equipment shall have an impairment tag, to be red in color, which is to be used when major deficiencies are found on these systems or equipment.

b. An impairment tag shall be placed on all fire sprinkler systems/equipment upon discovery that the system or equipment is impaired to the point that life safety is at risk or to the point that the automatic or manual discharge system will be prevented from functioning as intended.

c. Impairment tags shall also be placed on any equipment or system where life safety is in imminent danger.

d. A red tag is not required to be placed on a fire hose which fails hydrostatic testing, but rather, the fire hose shall be removed from service at the owner's direction.

e. Written notice shall be made to the owner and to the Office of State Fire Marshal Inspection Section by the certified firm as soon as is practically possible but shall not exceed two working days after the system or equipment is red tagged. Notification to the Office of State Fire Marshal is not needed for fire hoses removed from service. Written notification can be by electronic mail or facsimile. The Office of State Fire Marshal shall provide a form for notification. Additional notification (written or verbally) should be made to the local fire department when a system is red tagged.

f. Impairment tags must contain all of the information listed below:

i. "DO NOT REMOVE BY ORDER OF THE STATE FIRE MARSHAL" (all capital letters in bold face type);

ii. fire sprinkler firm's name, physical address and telephone number;

iii. fire sprinkler firm's State Fire Marshal certificate number;

iv. employee's name and State Fire Marshal license number (if applicable) to be printed on tag either at the time of service or preprinted;

v. employee's signature to be signed at time of installation, certification or service (no preprinted signatures nor initials are permitted);

vi. day, month and year in which the inspection was performed (to be punched through service tag at designated marks for month and year; designated marks for month and year shall only be punched once per tag);

vii. type of impairment found (to be hand written on rear of tag);If additional space is needed to note the impairments, then multiple tags shall be used noting 1 of 2, 2 of 2, etc.;

viii. model number and manufacturer of the sprinkler valve(s);

ix. business owner or tenant and physical address of where the sprinkler system is located (to be noted on rear of tag).

g. Notification of fire protection equipment/systems inspections where no deficiencies are found need not be sent to the Office of State Fire Marshal unless specifically requested.

4. Written Notification. The following information is required to be sent when written notification is made to the Office of State Fire Marshal Inspection Section:

a. name, address, and telephone number of the business owner or tenant of where the sprinkler system is located;

b. name, address, telephone number, and certificate number of the firm noting the impairment;

c. name and license number (if applicable) of the employee who performed the certification, inspection, maintenance, or service;

d. type of system (manufacturer and model number should also be included);

e. code, inspection chapter and year edition firm used for inspection;

f. reason for the impairment. Note: A copy of the inspection or service report shall be included; and

g. date system or equipment was red or yellow tagged.

5. Non-Required and/or Non-Conforming Systems. Where a fire protection system is non-required or permitted to be installed in a non-conforming state by this office or is both non-required and non-conforming then the following additions shall be made to the guidelines set forth in this Section.

a. Each firm shall stamp or write on the installation tag and/or service tag one of the following statement as applicable:

i. NON-REQUIRED SYSTEM; or

ii. NON-CONFORMING SYSTEM; or

iii. NON-REQUIRED/NON-CONFORMING SYSTEM.

b. Such print or stamp shall be in all capital letting and be written or stamped so as to not obscure other information provided on the tag.

c. This does not supersede the requirements to place a yellow or red tag on a system that is impaired in any way.

6. Miscellaneous Provisions

a. On all fire sprinkler systems, a plastic pocket pouch/sleeve shall also be attached to the riser where all tags and inspection reports shall be maintained for a period of one year after the system's annual certification. Upon a new annual certification, all previous service tags and inspection reports may be removed and given to the owner to keep on file. This requirement does not apply to fire hoses.

b. All tags must be card stock, plastic, vinyl, tyevak or metal in order to maintain the running record for the system. One sided or self adhesive service tags are not permitted except for fire protection equipment or systems in areas subject to adverse conditions. Self adhesive tags shall contain all of the information required on hanging tags.

c. All tags shall be 5 1/4 inches in height and 2 5/8 inches in width.

d. Firms shall have their tags printed and one forwarded to the State Fire Marshal's Licensing Section for approval and incorporation in the firm's file.

e. All tags remain the property of the certified firm and may be removed only by licensed employees of a certified firm or employees of the State Fire Marshal's Office and certified fire prevention bureaus.

f. The following table outlines which individual may place a tag on a fire sprinkler system.

	Installation	Annual Certification	Service	Acceptance Testing	Impairment
Qualifier	Yes	No	Yes	Yes	Yes
Inspector	Yes	Yes	Yes	No	Yes
Foreman	Yes	No	Yes	Yes	Yes

AUTHORITY NOTE: Promulgated in accordance with R.S. 40:1664.2 et seq.

HISTORICAL NOTE: Promulgated by the Department of Public Safety and Corrections, Office of State Fire Marshal, LR 35:682 (April 2009).

§3137. Prohibited Acts and Equipment

A. The following acts are prohibited and shall be considered grounds for administrative action to be taken against firms, persons and/or employees committing such:

1. charging a customer for work that was not performed;

2. misrepresenting oneself and/or one's firm to a customer, prospective customer or to employees of the State Fire Marshal, his designated representative or other public official;

3. impersonating the State Fire Marshal, his designated representative or any other public official;

4. intimidating or coercing a customer;

5. certifying, hydrostatically testing, inspecting, installing, maintaining, planning or servicing fire protection systems and/or equipment contrary to plans submitted for review, applicable NFPA codes, standards, and/or manufacturer's specifications without specific written permission from the Office of State Fire Marshal;

6. falsifying an application or any other document submitted to obtain a certificate or license or other documentation requested by or submitted to the Office of State Fire Marshal;

7. falsifying tags, labels, stenciling, inspection reports, invoices, system reports, and/or other documents;

8. working an employee without the appropriate endorsement of license or registration;

9. working without the appropriate endorsement of firm certificate or employee license or registration;

10. working with an expired firm certificate or license;

11. failing to notify the Office of State Fire Marshal of any changes that affect licensure;

12. contracting to a firm or person who is not properly certified, licensed or registered through the Office of State Fire Marshal to perform acts regulated by the provisions of R.S. 40:1664.1 et seq., or these rules;

13. failing to adhere to the tagging and/or notification policies of the Office of State Fire Marshal;

14. installing fire sprinkler equipment/systems prior to submitting plans and required documentation and receiving authorization to install such system from the Plan Review Section of the Office of State Fire Marshal;

15. failing to possess the equipment, tools, NFPA codes, standards or manufacturer's U.L. listed installation and service manuals to properly certify, hydrostatic test, inspect, install, plan, maintain or service the systems or equipment for which a firm is certified;

16. failing to adhere to all applicable laws and rules governing fire protection systems and/or equipment as promulgated by the Office of State Fire Marshal;

17. engaging in false, misleading or deceptive acts or practices;

18. aiding and abetting an unlicensed or unregistered person or firm in the certifying, hydrostatic testing, inspecting, installing, maintaining, planning or servicing of fire sprinkler equipment and/or system or fire hose.

AUTHORITY NOTE: Promulgated in accordance with R.S. 40:1664.2 et seq.

HISTORICAL NOTE: Promulgated by the Department of Public Safety and Corrections, Office of State Fire Marshal, LR 35:684 (April 2009).

§3139. Enforcement

A. The State Fire Marshal or his designated representative, shall make, or cause to be made, from time to time, inspections of a firm's physical locations, vehicles or job sites to verify required certificates, employee lists, employee licenses, insurances, equipment, tools, NFPA codes, standards and manufacturer's manuals and work/service performed, and as circumstances dictate, to determine that fire sprinkler firms and their employees are engaging in activity in accordance with the requirements of R.S. 40:1664.1 et seq., and these rules.

B. The State Fire Marshal shall investigate all complaints of alleged violations of R.S. 40:1574 et seq., 40:1664.1 et seq., and these rules. Complaints of alleged violations shall be made in writing to the Licensing Section of the State Fire Marshal's office. The office shall make available a complaint form to be used as needed. Penalties shall be administered to those firms and /or employees found to have violated these laws and/or rules. Proposed administrative penalty letters shall act as official notification of alleged violations.

AUTHORITY NOTE: Promulgated in accordance with R.S. 40:1664.2 et seq.

HISTORICAL NOTE: Promulgated by the Department of Public Safety and Corrections, Office of State Fire Marshal, LR 35:685 (April 2009).

§3141. Administrative Actions

A. The State Fire Marshal may refuse the issuance or renewal of, suspend, or revoke a certificate of registration, or license and impose administrative penalties, if, after notice and hearing, as provided for by the Administrative Procedures Act, it is found that a person, certified firm, or licensee or an applicant for registration, or license, failed to comply with the provisions of R.S. 40:1664.1 et seq., or these rules.

1. Offenses: The following categories shall denote classification of offenses for persons, firms and employees for determining the penalty to be imposed.

a. Minor:

i. failing to notify the Office of State Fire Marshal of any changes that affect licensure;

ii. failing to adhere to the tagging and/or notification policies of the Office of State Fire Marshal;

iii. working with an expired (31-45 days) license, or certificate of registration;

iv. failing to properly display a firm certificate or an individual license.

b. Serious:

i. misrepresenting oneself and/or one's firm to a customer, prospective customer or to employees of the State Fire Marshal, his designated representative or other public official;

ii. certifying, hydrostatically testing, inspecting, installing, maintaining, planning or servicing fire sprinkler systems and/or equipment contrary to plans submitted for review, applicable NFPA codes, standards, and/or manufacturer's specifications without specific written permission from the Office of State Fire Marshal;

iii. working an employee without the appropriate endorsement of license or registration;

iv. working without the appropriate endorsement of firm certificate or employee license or registration;

v. working with an expired (46-60 days) license or firm certificate;

vi. installing fire sprinkler equipment and/or system, or fire hoses prior to submitting plans and required documentation and receiving authorization to install such system from the Plan Review Section of the Office of State Fire Marshal;

vii. contracting to a firm or person who is not properly certified, licensed or registered through the Office of State Fire Marshal to perform acts regulated by the provisions of R.S. 1664.1 et seq. or these rules;

viii. failing to possess the equipment, tools, NFPA codes, standards or manufacturer's U.L. listed installation and service manuals to properly certify, hydrostatic test, inspect, install, plan, maintain or service the systems or equipment for which a firm is certified;

ix. committing five or more minor offenses within a three year period.

c. Major:

i. charging a customer for work that was not performed;

ii. impersonating the state fire marshal, his designated representative or any other public official;

iii. intimidating or coercing a customer;

iv. falsifying an application or any other document submitted to obtain a certificate or license or other documentation requested by or submitted to the Office of State Fire Marshal;

v. falsifying tags, labels, stenciling, inspection reports, invoices and/or other documents;

vi. working without any or with a suspended firm certificate of registration or license;

vii. working an employee with a suspended license;

viii. aiding and abetting an unlicensed or unregistered person or firm in the certifying, hydrostatic testing, inspecting, installing, maintaining, planning or servicing of a fire sprinkler system, fire pump or fire hose;

ix. committing three or more serious offenses within a three year period;

xi. engaging in false, misleading or deceptive acts or practices.

2. Penalties. The following fine schedule shall be used to access fines to persons, firms, and/or employees who violate the laws and rules governing fire sprinkler systems/equipment. Penalties will be imposed to persons, firms and/or employees based on the classification of offense. Each classification of offense will have a minimum and maximum fine shown and any other administrative penalty that may be imposed.

a. Firms and/or Persons

i. Minor—$50 fine to $250 fine and/or official warnings may be imposed.

ii. Serious—$250 fine to $1,000 fine and/or suspensions of up to 90 days may be imposed.

iii. Major—$1,000 fine to $5,000 fine and/or suspensions from 91 to 365 days may be imposed and/or revocation of certificate may be imposed.

b. Employees and/or Persons

i. Minor—$10 fine to $50 fine and/or official warnings may be imposed.

ii. Serious—$50 fine to $500 fine and/or suspensions of up to 90 days may be imposed.

iii. Major—$500 to $5,000 fine and/or suspensions from 91 to 365 days may be imposed and/or revocation of license may be imposed.

c. The State Fire Marshal may deviate from this fine schedule where circumstances and/or evidence warrant a more stringent or more lenient penalty.

d. In lieu of fine payments, the State Fire Marshal may require remedial or additional training be obtained by those found in violation.

e. Those offenses not enumerated in this list shall receive penalties for violations of similar nature.

f. The Office of State Fire Marshal may also pursue criminal charges or injunctive relief for any of the above enumerated offenses.

AUTHORITY NOTE: Promulgated in accordance with R.S. 40:1664.2 et seq.

HISTORICAL NOTE: Promulgated by the Department of Public Safety and Corrections, Office of State Fire Marshal, LR 35:685 (April 2009).

§3143. Severability

A. If any provision of these rules or the application thereof to any firm, person, employee or circumstance is held invalid for any reason, the invalidity shall not affect the other provisions or any other application of these rules which can be given effect without the invalid provisions or application. To this end, all provisions of these rules are declared to be severable.

AUTHORITY NOTE: Promulgated in accordance with R.S. 40:1664.2 et seq.

HISTORICAL NOTE: Promulgated by the Department of Public Safety and Corrections, Office of State Fire Marshal, LR 35:686 (April 2009).

§3145. Adopted Standards

A. The office adopts by reference in their entirety those copyrighted codes or standards enumerated in LAC 55:V:103 published by and available from the National Fire Protection Association, Inc.(NFPA), Batterymarch Park, Quincy, Massachusetts, 02268. A copy of the codes and standards shall be kept available for public inspection in the Office of State Fire Marshal. In addition to those listed standards, the following shall also be adhered to as applicable:

1. ASME/ANSI A17.1—Safety Code for Elevators and Escalators;

2. ASME/ANSI A17.3—Safety Code for Existing Elevators and Escalators;

3. ASME/ANSI A117.1—Specifications for Handicapped Accessibility;

4. ADAAG—American Disability Accessibility Act Guidelines;

5. United States Department of Transportation;

6. Code of Federal Regulations 49.

AUTHORITY NOTE: Promulgated in accordance with R.S. 40:1664.2 et seq.
HISTORICAL NOTE: Promulgated by the Department of Public Safety and Corrections, Office of State Fire Marshal, LR 35:686 (April 2009).

§3147. National Recognized Testing Laboratory

A. This office currently approves the following as nationally recognized testing laboratories for the purpose of these rules:

1. Underwriters Laboratories, Inc.;

2. Factory Mutual Research Corporation;

3. The United States Testing Company, Inc.; and

4. Intertek-ETL.

B. The recognized laboratory shall maintain a follow-up inspection program to confirm that the manufacturer is providing the controls, inspections, and tests necessary to assure that all current listed equipment will meet the laboratory's testing standards. This follow-up inspection shall occur no less than once each six months for the first two years and once each year thereafter.

AUTHORITY NOTE: Promulgated in accordance with R.S. 40:1664.2 et seq.
HISTORICAL NOTE: Promulgated by the Department of Public Safety and Corrections, Office of State Fire Marshal, LR 35:686 (April 2009).

§3149. Equipment and Facilities

A. Each certified firm location shall be required to possess the equipment, tools, NFPA codes, standards and manufacturer's UL listed installation and service manuals necessary to properly certify, hydrostatic test, inspect, install, plan, maintain or service the systems or equipment for which it is certified. If such work is performed from a vehicle, then the vehicle shall be required to possess the necessary equipment, tools, NFPA codes, standards and manuals. Required codes, standards and manuals may be either in print or in an electronic format.

B. The following equipment and code books shall be required of fire sprinkler systems/equipment firms.

1. Equipment:

a. service, partial impairment (optional) and impairment tags;

b. installation placards;

c. pipe wrenches;

d. pipe threader;

e. pipe reamer;

f. calibrated gauges and gauge tester;

g. working hydrostatic test pump for testing fire hose, with flexible connection, check valves and fittings.

2. Code books (latest edition enumerated in LAC 55:V:103 and these rules) NFPA 11, 11A, 13, 13D, 13R, 14, 15, 16, 20, 22, 24, 25, 101, 1961 and 1962.

C. The State Fire Marshal or his representative shall inspect a firm's physical locations or vehicle(s) to ensure the proper equipment, tools, NFPA codes, standards and manufacturer's UL listed installation and service manuals are possessed by the firm. Firms must possess all applicable manufacturers' installation and service manuals for the systems and/or equipment it services.

D. The State Fire Marshal or his representative shall require that a firm or its employee(s) demonstrate a proficiency to use the necessary equipment to properly certify, hydrostatically test, or inspect fire sprinkler systems/equipment. Proficiency shall be deemed to be achieved if the system or equipment complies with the applicable NFPA code or standard and/or manufacturer's specifications.

E. For those firms or their employee(s) which do not possess the proper equipment, tools and manuals or who fail to demonstrate the ability to properly perform the required work, then an order of correction shall be made to the contractor or his employee to obtain the required equipment, tools, NFPA codes, standards or manual or to obtain additional training within a thirty day period. Another inspection shall be conducted by the State Fire Marshal or his representative to verify compliance with the order of correction. Good cause must be shown if proficiency is not shown or the required equipment, tools, NFPA codes, standards or manuals are not obtained by the time of the second inspection. Additional time may be granted for good cause. If good cause is not shown, then administrative action may be pursued.

F. The office may specifically enumerate additional required equipment at a later date should it be deemed necessary.

AUTHORITY NOTE: Promulgated in accordance with R.S. 40:1664.2 et seq.
HISTORICAL NOTE: Promulgated by the Department of Public Safety and Corrections, Office of State Fire Marshal, LR 35:686 (April 2009).

§3151. Advisory Committee

A. The State Fire Marshal may create an advisory committee to assist him or his representative to create new rules or modify existing rules as necessary to reflect changes or new trends in the industry. Associations requested to participate on the committee shall nominate the members to attend. This committee is to be a volunteer committee. No stipends or mileage will be paid to committee members.

AUTHORITY NOTE: Promulgated in accordance with R.S. 40:1664.2 et seq.
HISTORICAL NOTE: Promulgated by the Department of Public Safety and Corrections, Office of State Fire Marshal, LR 35:687 (April 2009).

§3153. Plumbing Contractors

A. All plumbing contractors who have met all requirements and passed a prescribed written examination based upon National Fire Protection Association (NFPA) Code, that has been given either by a recognized political subdivision of the state of Louisiana or by the State Licensing Board for Contractors, shall be authorized to install the water supply piping and check valves connecting to a fire sprinkler system.

B. Plumbing contractors performing the installation of underground water supply piping, shall be required to complete the fire marshal approved "Contractor's Material and Test Certificate for Underground Piping".

C. The planning, certifying, inspecting, maintenance and servicing of a fire sprinkler system shall be performed only by a fire sprinkler contractor that is certified, and its employees licensed with the Office of State Fire Marshal to perform such work.

D. Plumbing contractors are permitted to install up to one single sprinkler head tied into the domestic water supply as authorized by NFPA 101 for protection of isolated hazardous area. Plans shall be submitted to this office prior to installation.

AUTHORITY NOTE: Promulgated in accordance with R.S. 40:1563.

HISTORICAL NOTE: Promulgated by Department of Public Safety and Corrections, Office of State Fire Marshal, LR 35:687 (April 2009).

§3155. Plan Review

A. No fire sprinkler system/equipment requiring plan submittal in accordance with R.S. 40:1574 et seq., shall be installed prior to submitting plans with required documentation and receiving authorization to install such system from the Plan Review Section of the Office of State Fire Marshal. However, the installation of piping only shall be permitted upon receipt of plans and the issuance of a project number by the Office of State Fire Marshal, Plan Review Section. No control valves shall be installed prior to review or written authorization by the Office of State Fire Marshal. Any required changes determined by the review shall be the responsibility of the contractor.

B. All submittals for plan review shall identify the licensed firm performing the installation and responsible qualifier.

C. Only listed qualifiers of a firm shall be listed on applications for plan review or exemption forms to plan review. Additionally, any correspondence regarding a submittal, to include but not be limited to, telephone, email or written correspondence, shall only be through a listed qualifier of the firm, owner of the firm, a professional of record or owner of the building.

D. A new plan review shall be required when a firm takes over a project from another firm, listing the new firm's information and any changes to the project.

AUTHORITY NOTE: Promulgated in accordance with R.S. 40:1664.2 et seq.

HISTORICAL NOTE: Promulgated by the Department of Public Safety and Corrections, Office of State Fire Marshal, LR 35:687 (April 2009).

§3157. Miscellaneous Provisions

A. Marking of Vehicles. All service vehicles owned or operated by firms or their employees used for regulated activities, as defined by R.S. 40:1664.1 et seq., and these rules shall have the firm name and firm certificate number permanently inscribed, painted, stenciled or affixed by magnetic means on such vehicles. Such markings shall be a minimum of 2 1/2 inches in height and not less than 1/4 inch in width. Letters and numbers shall be on a contrasting background and be conspicuously seen from the outside of the vehicle.

B. Restrictions

1. Certificate or license holders are not agents or representatives of the state of Louisiana, the Department of Public Safety or the Office of State Fire Marshal. No claims or inferences of such shall be made.

2. A certificate or license does not authorize anyone to enforce these rules or to enter any building without the owner's permission or to certify, service, hydrostatically test, inspect, install, plan, or maintain fire protection equipment and/or systems without the owner's permission.

3. Certificate and license holders shall not allow the use of their certificate or licenses by other firms, persons or employees.

4. A certificate or license holder shall not perform any activity relating to fire sprinkler equipment and/or systems or fire hoses unless employed by and within the course and scope of that employment with a firm regulated by the provisions of R.S.40:1664.1 et seq.

5. A person shall not perform any act for which a certificate or license is required unless:

a. first being certified or licensed to perform such acts; and

b. is employed by a firm certified to perform those acts; and

c. is performing those acts for the certified firm by which he is employed.

6. Nothing in these rules shall prevent an appropriately licensed or registered firm or person from certifying, hydrostatically testing, inspecting, installing, maintaining, planning or servicing any manufacturer's fire sprinkler equipment and/or systems.

C. Multiple Names. A firm which uses multiple names must apply for a separate certificate of registration if each named firm has a separate state or federal tax number. All "doing business as" names shall be registered with this office at the time of application.

D. Required Inspection

1. The following shall be the building owner's responsibility:

a. fire sprinkler systems including but not limited to sprinkler risers, standpipe systems, fire pumps and hose stations shall be certified annually by a firm with a fire sprinkler endorsement;

b. fire hoses shall be certified at a minimum annually by a firm with a fire sprinkler endorsement firm or with a portable fire extinguisher/fire hose endorsement as outlined by R.S.40:1664.1 et seq.

2. The certified firm shall not be responsible for more frequent inspections as required by the applicable engineered specifications, manufacturer's specifications or per the inspection, testing and maintenance chapters as set forth in the applicable NFPA codes and standards unless under contract to perform such.

E. Isolated Hazardous Areas. Where areas are permitted to have sprinkler protection from the domestic water supply in lieu of fire rated construction, then the following shall apply.

1. Installation of domestic water sprinklers shall meet all requirements as set forth in the edition NFPA 101 as adopted by the Office of State Fire Marshal in LAC 55:V:103 or noted in these rules.

2. Installation of more than one but no more than six domestic water sprinklers shall only be performed by a licensed sprinkler contractor.

3. Installation of one domestic water sprinkler may be performed by a Louisiana licensed plumbing contractor or a licensed sprinkler contractor.

4. Inspection of domestic sprinkler heads shall be performed by either a licensed sprinkler contractor, a Louisiana licensed plumbing contractor or owner or his employee who is specifically trained to perform such inspection.

5. Documentation shall be provided on an annual basis that the sprinkler heads meet the specified requirements set forth in NFPA 101 as adopted by the Office of State Fire Marshal in LAC 55:V:103 or noted in these rules.

E. Upon the completion of any new installation or renovation of a sprinkler system, a fire marshal approved "Contractor's Material and Test Certificate" shall be completed.

F. Inspection Reports. After every annual certification, an inspection report shall be completed and left at the riser or if done electronically, mailed to the owner for placement at the riser. The report shall note the inspector who performed the inspection and the date of the inspection. The building owner is responsible for ensuring the report is at the riser in a plastic pocket sleeve or pouch.

G. Advertising. All advertising, including but not limited to telephone advertising, shall indicate a firm's certificate of registration number.

H. Service Invoices. All service invoices shall reflect all work performed, the date the work was performed, and the employee who did the work.

AUTHORITY NOTE: Promulgated in accordance with R.S. 40:1664.2 et seq.

HISTORICAL NOTE: Promulgated by the Department of Public Safety and Corrections, Office of State Fire Marshal, LR 35:688 (April 2009).

Chapter 32. Property Protection Licensing

§3201. Purpose

A. The purpose of these Rules is to regulate the activity of certifying, designing, inspecting, installing, integrating, maintaining, selling and servicing of security, household fire warning, stand alone electro/mechanical locking, door hardware, door hardware consultation, bank locking, bank auxiliary, detention locking, gate systems, special locking and closed circuit television equipment and/or systems in the interest of protecting and preserving lives and property pursuant to authority of R.S. 40:1664.1 et seq.

AUTHORITY NOTE: Promulgated in accordance with R.S. 40:1664.2 et seq.

HISTORICAL NOTE: Promulgated by the Department of Public Safety and Corrections, Office of State Fire Marshal, LR 37:2736 (September 2011).

§3203. Applicability of Rules

A. These Rules shall apply to all firms and persons engaged in property protection activity.

AUTHORITY NOTE: Promulgated in accordance with R.S. 40:1664.2 et seq.

HISTORICAL NOTE: Promulgated by the Department of Public Safety and Corrections, Office of State Fire Marshal, LR 37:2736 (September 2011).

§3205. Exceptions

A. These Rules shall not apply to the following:

1. firms and/or persons engaging in the activity of certifying, inspecting, installing, integrating, or servicing fire detection and alarm equipment and/or systems in commercial businesses;

2. the certifying, inspecting, installing, integrating, or servicing of security or CCTV equipment and/or systems by building owners or their direct employees;

3. public agencies and their direct employees engaging in the activity of certifying, inspecting, installing, integrating, or servicing camera systems in public vehicles;

4. law enforcement agencies or private investigation firms currently licensed by the Louisiana Board of Private Investigators installing camera systems in conjunction with an active investigation. Individual private investigators must be licensed through a private investigation firm with the Louisiana Board of Private Investigators to be exempt from this Subpart;

5. firms and/or persons who sell security, locking and/or camera systems and equipment at wholesale to contractors licensed per R.S. 40:1664.1 et seq.;

6. general contractors and their employees who are properly licensed through the Louisiana State Board of Contractors or a building owner that installs or removes

complete stand alone electro-mechanical locks when doing so in the course of residential or commercial new construction or remodeling. Additionally, the general contractor can install all associated hardware specified to be installed on the door. This exemption only applies to the firm which is acting as the general contractor on the project. It does not apply to other firms which hold a General contractor's license but are only acting as a sub-contractor on the project;

7. any merchant or retail store that is in the business of recoding new locks on the retail premises. Locks must be purchased at the same location and recoded at the time of purchase;

8. firms and/or persons who only install bank locking equipment, including but not limited to, vaults, safes, automatic teller machines, and/or safety deposit boxes, while doing so in conjunction with a licensed locksmith or bank locking contractor. The licensed locksmith or bank locking contractor shall certify the installation;

9. any manufacturer, and his employee or representative, who acts as a consultant to a certified firm in the certifying, inspecting, installing, integrating, or servicing of property protection systems and/or equipment while under the direct supervision of the certified firm.

AUTHORITY NOTE: Promulgated in accordance with R.S. 40:1664.2 et seq.

HISTORICAL NOTE: Promulgated by the Department of Public Safety and Corrections, Office of State Fire Marshal, LR 37:2736 (September 2011).

§3207. Notices by the Fire Marshal

A. Any notice required to be given by the state fire marshal by any provision of R.S. 40:1664.1 et seq., or these rules must be given by personal or domiciliary service or mailed, postage prepaid, to the person's residence or firm address as it appears on the records in the Office of State Fire Marshal. It is the responsibility of the person or firm involved to ensure that the Office of State Fire Marshal has a correct address for the person or firm.

AUTHORITY NOTE: Promulgated in accordance with R.S. 40:1664.2 et seq.

HISTORICAL NOTE: Promulgated by the Department of Public Safety and Corrections, Office of State Fire Marshal, LR 37:2737 (September 2011).

§3209. Certificate, License Required

A. Each firm engaged in property protection activity shall apply for a certificate of registration in the endorsements of certification desired in accordance with these Rules prior to conducting any such activity in this state.

B. Each person or employee, including apprentices, engaged in property protection activity shall apply for a license in the endorsements of licensure desired in accordance with these Rules prior to conducting any such activity in this state.

C. Any firm and/or person described in A or B of this section, which has not applied for and received a current and valid certificate of registration or license, shall immediately cease such activities. The Office of State Fire Marshal shall take all steps necessary to enforce an order to cease and desist and pursue administrative penalties against violators of this Subpart.

AUTHORITY NOTE: Promulgated in accordance with R.S. 40:1664.2 et seq.

HISTORICAL NOTE: Promulgated by the Department of Public Safety and Corrections, Office of State Fire Marshal, LR 37:2737 (September 2011).

§3211. Definitions

A. The following words and terms, when used in these rules, shall have the following meanings, unless the context clearly indicates otherwise.

Access Control Systems—those locking systems and equipment as outlined in NFPA 101 designed to restrict entry into an area, room, building or space. These systems require an annual certification.

Apprentice—a person who is licensed to work under the direct supervision and accompaniment of a technician who is licensed to the same firm and holding a valid license to perform the same acts.

Apprentice Endorsement—that document issued by the state fire marshal to an employee to engage in property protection activity while under the direct supervision of a technician who is licensed to the same firm and holding a valid license to perform the same acts.

Bank Auxiliary Systems—systems and equipment which are found in financial institutions but are not directly associated with locking systems. Such systems, include but are not limited to, after hour depositories, tube systems, teller audio/video systems, and automatic teller machines, excluding the safe.

Bank Auxiliary Systems Endorsement—that document issued by the state fire marshal to an employee of a certified property protection firm to engage in property protection activity of bank auxiliary systems.

Bank Locking Endorsement—that document issued by the state fire marshal to a firm or employee authorizing either to engage in property protection activity of bank locking systems and equipment.

Bank Locking Systems—locking systems and equipment found in financial institutions or designed for protection of financial transactions in other commercial businesses. Such systems and equipment include, but is not limited to, vaults, safes, automatic teller machines, cash dispenser, safe deposit boxes, tube systems, closed circuit television and depository systems and/or equipment. The term includes stand alone electro/mechanical locks but does not include security or special locking systems.

Certificate of Registration—that document issued by the state fire marshal to a firm authorizing it to engage in such activities as defined in these rules.

Certify—to attest to the proper functionality, inspection, installation, integration, maintenance, or service of property protection equipment and systems in accordance with all

applicable engineered specifications, manufacturer's specifications, the applicable NFPA codes and standards and the reviewed fire marshal plans.

Closed Circuit Television Endorsement—that document issued by the state fire marshal to a firm or employee authorizing either to engage in property protection activity of closed circuit television systems and equipment. This includes the connection of closed circuit television systems and equipment to computer systems or equipment.

Closed Circuit Television System—a system and its components which transmits video and/or audio signals or images via cameras, computer or other means. Transmissions may be done via hard wire, including, but not limited to, coaxial cable, fiber optic cable, network cable, internet protocol (IP), or wireless devices and means. The term includes security camera and/or surveillance camera systems.

Commercial Businesses—all buildings including, but not limited to, public, private and industrial structures. The term does not include one and two family dwellings.

Contact Person—that individual designated by a firm to act as liaison with the Office of State Fire Marshal.

Delayed Egress Systems—those locking systems and equipment as outlined in NFPA 101 designed to impeded egress for a specified limited time from an area, room, building or space. These systems require an annual certification.

Design—to create a specific layout for a property protection system for the purpose of protecting persons and/or property. The term “layout of the system” only refers to those persons who physically create such layout after visiting the location. Design and/or layout of the system’s devices shall follow manufacturer’s recommendations and application limitations.

Detention Locking Endorsement—that document issued by the state fire marshal to a firm or employee authorizing either to engage in property protection activity of detention locks and locking systems and equipment as related to cell areas in penal institutions and cell areas in other occupancies such as health care or business.

Detention Locking Systems—locking systems and equipment within a penal institution and in other occupancies having such systems and equipment in cell areas only. The term includes locks of various types including pin tumbler-standard and mogul types, lever and wafer tumbler, stand alone electro/mechanical and full electronic and pneumatic controlled locks. The term does not include special locking systems within non-cell areas of the building. These systems require an annual certification.

Direct Supervision—oversight given by a qualifier of a firm’s employees or by a technician of an apprentice while performing property protection activity. The qualifier, the technician and apprentice must be licensed to the same firm. A qualifier is considered to provide direct supervision of employees if he routinely engages and regularly reviews the daily property protection activity of the employees of the firm. For a technician to provide direct supervision of an apprentice, both must be physically present at the same work location. They are not required to constantly be in line of sight of each other.

Door Hardware—builders’ hardware or architectural hardware, including but not limited to, stand alone electro/mechanical locks, latches, exit hardware, closures and hinges mounted onto doors intended to operate and secure the door properly. The term does not include special locking systems and equipment, doors or door frames.

Door Hardware Endorsement—that document issued by the state fire marshal to a firm or employee authorizing either to engage in property protection activity of door hardware equipment and the consulting or the providing of technical advice regarding the selection of door hardware. The termination of these components to the building power system is not permitted. The term does not include special locking systems.

Door Hardware Consultant Endorsement—that document issued by the state fire marshal to a firm or employee authorizing either to engage in the consulting and/or the providing of technical advice regarding the selection of door hardware.

Electronically Controlled Egress Door Assemblies—those locking systems and equipment as outlined in NFPA 101 designed to restrict entry into an area, room, building or space. The release of such locking systems incorporates a mechanical switch that interrupts power to a magnetic or electric lock. These systems require an annual certification.

Elevator Lobby Exit Access Door Assembly Locking Systems—those locking systems and equipment as outlined in NFPA 101 designed to restrict entry into an area, room, building or space from an elevator lobby. The release of such locking systems incorporates redundant features. These systems require an annual certification.

Employee—a person who works for a "firm" as defined by R.S. 40:1664.2 et seq., in return for financial or other compensation.

a. For the purposes of the licensing requirements, contained in R.S. 40:1664.2 et seq., employees shall not include secretaries, drivers or accounting or other administrative personnel.

b. For the purposes of licensing requirements, the firm owner or owners shall be considered an "employee" if he or she is or will be certifying, inspecting, installing, integrating, maintaining, selling and/or servicing security, household fire warning, stand alone electro/mechanical, special locking and closed circuit television equipment and/or systems.

Equipment Distributor—Those firms and/or persons who sell security, locking and/or camera systems and equipment at wholesale to property protection contractors licensed per R.S. 40:1664.1 et seq. Equipment distributors shall not engage in property protection contracting without being properly licensed per this Subpart.

Firm—a sole proprietorship, partnership, corporation, limited Liability Company or any other entity.

Gate System Endorsement—that document issued by the state fire marshal to a firm or employee authorizing either to engage in property protection activity of Pedestrian or Vehicle Gate systems and equipment.

Health Care Locking Systems—locking systems and equipment within a health care facility as outlined in NFPA 101 that provides security for the patient based on the clinical needs of the patient. These systems require an annual certification.

Household Fire Warning Endorsement—that document issued by the state fire marshal to a firm or employee authorizing either to engage in property protection activity of fire detection and alarm systems in one and two family dwellings.

Household Fire Warning System—fire detection and alarm systems consisting of standalone and/or interconnected devices intended to detect and warn occupants of fire, smoke, heat, and/or poisonous gases. The term includes, but is not limited to, heat detectors, smoke detectors and carbon monoxide detectors. Systems and equipment may be powered by direct or alternating current power.

Inspection—a visual examination of a system or portion thereof to verify that it appears to be in operating condition and is free of physical damage.

Installation—the initial placement of property protection equipment and systems or an addition, extension, or alteration after initial placement.

Integration—the act of developing a unified and functioning property protection system and/or equipment in accordance with manufacturers' specification and/or NFPA codes and standards.

License—that document issued by the state fire marshal to an employee of a certified firm authorizing the employee to engage in the activities as defined by these rules.

Locksmith Endorsement—that document issued by the state fire marshal to a firm or employee authorizing either to engage in property protection activity of stand alone electro/mechanical locks, closed circuit television or special locking systems and equipment.

Maintenance—work, including, but not limited to repair, replacement, and service, performed to ensure that equipment operates properly. It includes a thorough examination for physical damage or condition to prevent its operation and any necessary repair or replacement.

Nationally Recognized Testing Laboratory—a nationally recognized testing company concerned with product and service evaluation, which, after conducting successful examinations, inspections, tests and reexaminations, reflects approval by various labeling, listing and classification actions.

NFPA—the National Fire Protection Association, Inc., a nationally recognized standards-making organization.

Officer—the president, vice president, secretary, treasurer, comptroller, general manager or any other person who performs functions corresponding to such positions for a property protection firm.

Operating Location—a physical office which houses employees and business documents or records and from which the acts authorized by the certificate of registration are performed. The office must be open and accessible during normal work hours. Business records must be maintained for a minimum of years. The use of a storage facility, telephone answering service or Post Office Box shall not constitute a location for purposes of this subpart. The office must physically reside within the boundaries of Louisiana.

Pedestrian Gate System—access controls or barriers used to prevent unauthorized entry to a building or area. Pedestrian gates may be secured by either stand alone electro/mechanical locks or special locking systems and equipment. These systems require an annual certification.

Person—a natural individual, including any owner, manager, officer, or employee of any firm.

Pocket license—that document issued by the state fire marshal to an employee of a certified firm, in pocket size and bearing a photographic image of the licensee, authorizing the employee to engage in the activities as defined by these rules.

Principal—a person or entity that has a controlling interest of a property protection firm regardless of the form of organization. "Principal" includes a person or entity entitled to exercise the prerogatives or indicia of ownership or control of a property protection firm whether by direct action, assignment, or any other kind of substitution or subrogation.

Property Protection Activity—the act of certifying, designing, inspecting, installing, integrating, maintaining, selling and/or servicing of security, household fire warning, stand alone electro/mechanical locking, special locking and closed circuit television equipment and/or systems pursuant to R.S. 40:1664.1 et seq.

Property Protection Equipment and Systems—those systems and equipment designed to protect persons and property from the dangers of fire, theft, unauthorized entry or other harmful actions or events.

Property Protection Sales and Design Endorsement—that document issued by the state fire marshal to an employee of a certified property protection firm who designs or sells a property protection system or equipment.

Qualifying Person—the employee of a firm who currently meets the certification, examination and/or training requirements set for each endorsement by the Life Safety and Property Protection Advisory Board. A qualifier shall physically reside within 150 miles of the operating location and work a minimum of 32 hours per week. The qualifier must be actively engaged in the direct supervision of the

daily property protection activities for the firm and its employees for which they are authorized to perform.

Security Endorsement—that document issued by the state fire marshal to a firm or employee authorizing either to engage in property protection activity of security, household fire warning, closed circuit television and/or special locking systems and equipment.

Security Systems—those assemblies of wiring, electronic transmitting devices, detection devices, and related equipment for the detection of theft, unauthorized entry or other physical harm to a structure's occupants or property.

Sell—to solicit on behalf of a property protection firm by any means for the sale or lease of a property protection system. The term includes, but is not limited to, solicitation via telephone or electronic devices, public notice or advertisement, door to door or any other type of personal interaction.

Service—the act of repair, bypass or replacement of property protection equipment/systems to ensure its proper functioning.

Special Locking System—electronic, magnetic and/or pneumatic locking systems and/or equipment actuated from a remote location. These systems are typically powered by the building power but may be battery powered only as well. The term includes, but is not limited to, access control, delayed egress, electrified hardware, magnetic locks, health care locks, pneumatic, pin, card reader, proximity, biometric, video/telephone, electronically controlled egress door assemblies, pedestrian and vehicle gates and remote control and wireless access systems and equipment. This would include any necessary mechanical equipment to complete the installation of the system.

Special Locking System Endorsement—that document issued by the state fire marshal to a firm or employee authorizing either to engage in property protection activity of special locking systems and equipment.

Stand Alone Electro/Mechanical Locks—locks that are operated by electric, electronic and/or mechanical means. They may not be powered by the building power. Stand alone electro/mechanical locks shall only be actuated at and physically mounted on the door leaf. Stand alone electro/mechanical locks include, but are not limited to, hotel room door locks, battery operated locks, push button locks, self-powered door locks, key fob and combination locks. The term does not include special locking systems and equipment.

Vehicle Gate Systems—an access control system or barrier used to prevent unauthorized entry to a building or area. Vehicle gates may be secured by either stand alone electro/mechanical locks or special locking systems and equipment.

AUTHORITY NOTE: Promulgated in accordance with R.S. 40:1664.2 et seq.

HISTORICAL NOTE: Promulgated by the Department of Public Safety and Corrections, Office of State Fire Marshal, LR 37:2737 (September 2011).

§3213. Certificates of Registration

A. Every firm must obtain from the state fire marshal a certification of registration with the appropriate endorsements as provided for by R.S. 40:1664.1 et seq., before engaging in the property protection activity of security, household fire warning, stand alone electro/mechanical locks, special locking systems and closed circuit television equipment and/or systems.

1. Each firm, as defined by R.S. 40:1664.1 et seq., shall have at least one licensed technician per endorsement of certification to perform the act or acts authorized by its certificate.

2. Each firm, as defined by R.S. 40:1664.1 et seq., shall have at least one licensed qualifier per endorsement of certification to perform the act or acts authorized by its certificate. When a firm only has one technician, the technician can also be the qualifier.

3. Firms as defined by R.S. 40:1664.1 et seq., and their owners shall be responsible for the acts of their agents and employees for the purpose of these rules including the initiation of administrative action by the state fire marshal.

B. The following shall apply to certificates of registration.

1. Posting.

Each certificate shall be posted conspicuously at each firm and/or branch office premises.

2. Changes of Ownership. The change of a firm's majority ownership invalidates the current certificate. To assure continuance of the firm's ability to conduct property protection contracting, an application for a new certificate shall be submitted to the state fire marshal within 10 days after such change in ownership.

3. Change of Corporate Officers. Any change of corporate officers within the licensure period, must be reported in writing to the state fire marshal within 10 days of the change. This change does not require a revised certificate.

4. Duplicates. A duplicate certificate must be obtained from the state fire marshal to replace a lost or destroyed certificate. The certificate holder must submit written notification of the loss or destruction within 10 days, accompanied by the required fee specified in these rules.

5. Revisions/Changes. The change of a firm's name, location, or mailing address or operating status requires a revision of the certificate of registration. Certificates of registration requiring changes must be surrendered to the state fire marshal within 10 days after the change requiring the revision. The firm must submit written notification of the change with the surrendered certificate of registration, accompanied by the required fee specified in by R.S. 40:1664.1 et seq.

6. Non-Transferability. A certificate of registration is not transferable from one firm to another.

7. Validity. A certificate of registration is valid for one year from date of issue, and must be renewed annually.

AUTHORITY NOTE: Promulgated in accordance with R.S. 40:1664.2 et seq.

HISTORICAL NOTE: Promulgated by the Department of Public Safety and Corrections, Office of State Fire Marshal, LR 37:2740 (September 2011).

§3215. Licensure

A. Required. Each person who engages in property protection activity of security, household fire warning, stand alone electro/mechanical locks, special locking systems and closed circuit television equipment and/or systems shall have a current and valid license issued by the state fire marshal.

B. Types of Endorsement. Each license shall be identified by endorsement, which indicates the authorized act or acts which may be performed by the licensee.

C. Posting. It is not necessary to post an employee license on a wall. A master list of all employees' names and license numbers must be kept at each office location and must be available for review upon request by the state fire marshal or his designated representative.

D. Pocket License. The pocket license is for immediate identification purposes only so long as such license remains valid and while the holder is employed by the firm reflected on the license and shall be on his/her person at all times when conducting property protection activity in the field. The pocket license need not be visibly displayed when working in areas where the license may be damaged or lost. The license must still be available for inspection upon request.

E. Duplicate License. A duplicate license must be obtained from the state fire marshal to replace a lost or destroyed license. The license holder and his employer must submit written notification within 10 days of the loss or destruction of a license, accompanied by the required fee as specified in these rules.

F. Revised Licenses. The change of a licensee's employer, home address or mailing address or employment status requires a revised license. Licenses requiring revision must be surrendered to the state fire marshal within 10 days after the change requiring the revision. The license holder and his employer must submit written notification of the necessary change with the surrendered license, accompanied by the required fee as specified in these rules.

G. Non-Transferable. A license is not transferable from one person to another or from one firm to another.

H. License Reciprocity. The state fire marshal may waive license requirements for an applicant with a valid license from another state if that state has license requirements substantially equivalent to Louisiana and which recognizes licenses issued by this office.

I. Validity. A license is valid for one year from date of issue, and must be renewed annually, unless the state fire marshal adopts a system under which licenses expire on various dates during the year. Should a staggered renewal system be adopted, the renewal fees shall be prorated on a monthly basis so that each licensee pays only that portion of the fee that is allocable to the number of months during which the license is valid.

J. Transfer of Employer. When a currently licensed employee transfers to a new employer, a revised license shall be required indicating the new firm's information. The license shall be revised to show the same expiration date of the new employer. Upon receipt of the revision application by the state fire marshal, the individual may go to work for the new employer while waiting the processing of the license. This go-to-work allowance shall not authorize the employee to engage in property protection activity for which he/she was not previously licensed to perform or for which the firm is not currently registered to perform.

K. Age Limitations. For the purpose of licensing, no one under the age of 18 shall be eligible for a technician's license and no person under the age of 16 shall be eligible for an apprentice license.

AUTHORITY NOTE: Promulgated in accordance with R.S. 40:1664.2 et seq.

HISTORICAL NOTE: Promulgated by the Department of Public Safety and Corrections, Office of State Fire Marshal, LR 37:2740 (September 2011).

§3217. Alteration of Certificates or Licenses

A. Any alteration of a certificate of registration or license renders it invalid and such alteration shall be the basis for administrative action in accordance with penalties set forth in R.S. 40:1664.1 et seq., and these rules.

AUTHORITY NOTE: Promulgated in accordance with R.S. 40:1664.2 et seq.

HISTORICAL NOTE: Promulgated by the Department of Public Safety and Corrections, Office of State Fire Marshal, LR 37:2741 (September 2011).

§3219. Application for Certificates of Registration

A. Applications for a certificate of registration for Life Safety and/or Property protection firms shall be in writing on the forms provided by the state fire marshal and accompanied by the required fee as specified in these rules.

B. The application for certificates of registration shall:

1. be executed by the sole proprietor, or by each partner of a partnership, or by the authorized officer of the firm;

2. identify the type of endorsement applied for;

3. identify the physical and mailing address, if different, of the firm's operating location;

4. identify any and all names by which the firm may conduct activity regulated by R.S. 40:1664.1 et seq., and these rules. Only one trade or "Doing Business As" name shall be permitted per each certificate of registration;

5. identify each principal and officer of the firm;

6. identify the contact person and email address of such, as defined by these rules;

7. identify the qualifying person for each endorsement applied for;

8. identify any and all past violations or pending administrative action against the firm in other jurisdictions;

9. include a separate employee application for each qualifying person along with the required training or certification credentials as established by the Life Safety and Property Protection Advisory Board and an originally signed and notarized employment affidavit. A firm must employ and license at least one qualifier. Multiple qualifiers may be licensed;

10. be accompanied by:

a. at least one application with fee from an employee seeking to obtain a technician's license in each endorsement;

b. a current certificate of insurance issued to the

Office of State Fire Marshal showing a minimum of $500,000 coverage;

c. a copy of the local or occupational license for the firm.

C. The application shall also include written authorization by the applicant permitting the state fire marshal or his representative to enter, examine, and inspect any premise, building, room, vehicle, or establishment used by the applicant while engaged in property protection activity to determine compliance with the provisions of R.S. 40:1664.1 et seq., and these rules.

D. When the applicant has completed the requirements contained above, a pre–certification inspection may be conducted at the facilities or of the vehicles of the applicant for verification of compliance with this subpart. The office may inspect vehicles, equipment, buildings, devices, premises or any other area to be used in performing the activities allowed by the certificate of registration. After issuance of a certificate of registration, such facilities may be inspected annually thereafter or as frequently as deemed necessary to ensure that the equipment requirement continues to be met.

AUTHORITY NOTE: Promulgated in accordance with R.S. 40:1664.2 et seq.

HISTORICAL NOTE: Promulgated by the Department of Public Safety and Corrections, Office of State Fire Marshal, LR 37:2741 (September 2011).

§3221. Qualifying Persons

A. Each certified firm or each firm seeking certification shall employ at least one qualifying person for each endorsement it is making application for. No property protection system or equipment shall be certified, inspected, installed, integrated, maintained, serviced, sold, or submitted to the state fire marshal for review if the firm does not employ a qualifying person as provided herein.

B. The qualifying person shall be a paid employee working a minimum of 32 hours per week and shall receive a W-2 or K-1 tax form from the firm. The qualifier shall only qualify one firm for which he is employed. An individual may not qualify multiple firms at the same time. A contract employee cannot be used to fulfill this requirement except as provided by Subsection G below. A qualifier must physically reside within 150 miles of the office for which he or she qualifies.

C. The qualifying person shall be primarily and actively engaged in direct supervision of the daily property protection activity of the firm's employees and for those systems or equipment for which the firm holds endorsements for. If a firm holds multiple endorsements, then multiple qualifiers may be utilized to meet this requirement. Upon request by the state fire marshal or his representative(s), a qualifier shall provide documentation attesting to his or her supervision of any certification, integration, inspection, installation, maintenance or service performed by the firm he or she qualifies.

D. A qualifier must meet the minimum examination, certification, or training requirements as established by the Life Safety and Property Protection Advisory Board. The state fire marshal shall send notice to licensed firms of all changes to qualifier credentials made by the Life Safety and Property Protection Advisory Board.

E. At anytime that a firm finds itself without a qualifying person, such firm shall only be able to continue certifying, inspecting, maintaining and/or servicing existing contractual obligations for that endorsement but shall not engage in any new work until a qualifying person has been employed as provided herein. A firm may not submit plans to the Office of State Fire Marshal when it finds itself without a qualifying person.

F. This office shall be notified in writing within 10 working days anytime a qualifying person's employment is terminated for any reason.

G. A firm which loses its qualifying person and has timely notified the Office of State Fire Marshal shall have 90 days to hire another qualifying person. If after the loss of such an employee, a replacement cannot be found within the 90 days, the firm may make a request to the Office of State Fire Marshal to temporarily hire a qualifying person on a contractual basis. Good cause must be shown why another employee cannot be permanently hired. Approval by the Office of State Fire Marshal for the hiring of a qualifying person on a contractual basis shall not exceed six months. Not later than 30 days prior to the expiration of the six-month period, the firm may request an additional six-month period to employ a qualifying person on a contractual basis if good cause is shown why the firm cannot hire an employee to fulfill this requirement. The Office of State Fire Marshal may grant one additional six-month period during which a firm may employ a qualifying person on a contractual basis.

H. Failure to notify this office in writing within 10 working days of the loss of a qualifying person will cause forfeiture of any extension of time to hire another qualifying person.

I. A qualifying person must obtain an individual employee license as required by these rules. Licensure of the qualifier shall include a signed and notarized affidavit indicating the employment relationship and duties of the qualifier. If a firm desires to use multiple qualifiers for submitting plans and supervising the property protection

activity of the firm, then it must register and license the additional qualifiers with the Office of State Fire Marshal.

AUTHORITY NOTE: Promulgated in accordance with R.S. 40:1664.2 et seq.

HISTORICAL NOTE: Promulgated by the Department of Public Safety and Corrections, Office of State Fire Marshal, LR 37:2741 (September 2011).

§3223. Application for Licenses

A. Applications for a license from an employee of a certified firm shall be on forms provided by the State Fire Marshal and accompanied by the required fee as specified in these Rules.

B. Applications for individual licenses shall be accompanied by a written statement from the employer certifying the applicant's competency to perform property protection activity of the systems and equipment authorized by the endorsements applied for and that the individual is an employee who receives a W-2 or K-1 tax form from the firm.

C. Identify the type of endorsement applied for.

D. Identify the physical and mailing address, if different, of the individual's home address.

E. Identify any and all names by which the individual may have conducted activity regulated by R.S. 40:1664.1 et seq., and these rules, if not the same on the application.

F. Identify any and all past felony convictions, first-time offender pardons for a felony, and pleas of guilty or *nolo contendere* to a felony charge.

G. Identify any and all past violations or pending administrative action against the individual in other jurisdictions.

H. Unless a provisional license is issued, applications for individual licenses will not be accepted unless accompanied by documentation showing that the applicant has met all competency requirements as determined by the Life Safety and Property Protection Advisory Board.

I. No competency examination or training is required for an apprentice.

AUTHORITY NOTE: Promulgated in accordance with R.S. 40:1664.2 et seq.

HISTORICAL NOTE: Promulgated by the Department of Public Safety and Corrections, Office of State Fire Marshal, LR 37:2742 (September 2011).

§3225. Fees—General Information

A. Every fee required in accordance with the provisions of R.S. 40:1664.1 et seq., and these rules, shall be paid by firm check or certified funds made payable to the "Office of State Fire Marshal." Cash or personal checks cannot be accepted.

B. Fees shall be paid at or mailed to the Office of State Fire Marshal, Attention Licensing Section, at 8181 Independence Blvd., Baton Rouge, Louisiana 70806.

C. Late fees are required on all certificates of registration or licenses which are not timely renewed as outlined in R.S. 40:1664.1 et seq.

D. A renewal application accompanied by the required renewal fee and deposited with the United States Postal Service is deemed to be timely filed, regardless of actual date of delivery, when its envelope bears a legible postmark date which is on or before the expiration date of the certificate or license being renewed.

E. Certificates or licenses which have been expired for more than 60 days will be suspended and applicants must apply and pay for a new certificate of registration or license.

AUTHORITY NOTE: Promulgated in accordance with R.S. 40:1664.2 et seq.

HISTORICAL NOTE: Promulgated by the Department of Public Safety and Corrections, Office of State Fire Marshal, LR 37:2742 (September 2011).

§3227. Fees—Specific Information

A. Certificate of Registration Fees for Firms

	Initial	Renewal
Technical Endorsement		
Security	$250	$50
Locksmith	$250	$50
Door Hardware	$250	$50
Specialty Endorsement		
Household Fire	$250	$50
CCTV	$250	$50
Door Hardware Consultant	$250	$50
Bank Locking	$250	$50
Special Locking	$250	$50
Detention Locking	$250	$50
Gate Systems	$250	$50

B. License Fees for Employees

	Initial	Renewal
Technical Endorsement		
Security	$100	$50
Locksmith	$100	$50
Door Hardware	$100	$50
Specialty Endorsement		
Household Fire	$100	$50
CCTV	$100	$50
Door Hardware Consultant	$100	$50
Bank Locking	$100	$50
Bank Auxiliary	$100	$50
Special Locking	$100	$50
Detention Locking	$100	$50
Gate Systems	$100	$50
Property Protection Sales and Design	$100	$50
Apprentice	$50	$50

C. Late Renewal Fee. A penalty shall be assessed in accordance with R.S. 40:1664.2 et seq., for the late renewal of a certificate of registration or license.

D. Change in ownership: $250.

E. Changes or alterations: $20.

F. Duplicate certificates of registration or license: $20.

G. Replacement pocket registration card: $20.

AUTHORITY NOTE: Promulgated in accordance with R.S. 40:1664.2 et seq.

HISTORICAL NOTE: Promulgated by the Department of Public Safety and Corrections, Office of State Fire Marshal, LR 37:2743 (September 2011).

§3229. Initial Licensing Training Certification, Continuing Education

A. Initial Training Certification. Applicants for an individual initial license are required to meet the initial training certification requirements as established by the Life Safety and Property Protection Advisory Board.

B. Continuing Education. Applicants for an individual license who wish to renew their licenses are required to meet the continuing education requirements as established by the Life Safety and Property Protection Advisory Board.

AUTHORITY NOTE: Promulgated in accordance with R.S. 40:1664.2 et seq.
HISTORICAL NOTE: Promulgated by the Department of Public Safety and Corrections, Office of State Fire Marshal, LR 37:2743 (September 2011).

§3231. Property Protection Systems and Equipment

A. All property protection systems and equipment shall be certified, designed, installed, integrated, maintained or serviced in a manner that maintains the highest level of operation afforded by the manufacturer of the product.

B. All property protection systems and equipment shall be certified, designed, installed, integrated, maintain or serviced in a manner that meets all applicable codes and/or standards enumerated in LAC 55:V.103 or these rules.

AUTHORITY NOTE: Promulgated in accordance with R.S. 40:1664.2 et seq.
HISTORICAL NOTE: Promulgated by the Department of Public Safety and Corrections, Office of State Fire Marshal, LR 37:2743 (September 2011).

§3233. Smoke Inducing Security Systems

A. Where a smoke inducing (fog systems) security system is installed in a commercial business, the installing firm shall notify all local law enforcement and fire service agencies in that jurisdiction which have responsibility for response to the business.

B. Such notification shall be in writing and a copy of such shall be maintained at the firm’s office located in Louisiana.

AUTHORITY NOTE: Promulgated in accordance with R.S. 40:1664.2 et seq.
HISTORICAL NOTE: Promulgated by the Department of Public Safety and Corrections, Office of State Fire Marshal, LR 372743 (September 2011).:

§3235. Installation Tags

A. Upon installation of any special locking system, the system shall have a tag permanently affixed to the control panel or at the connection to the power source. The installation tag shall be a minimum of 2 3/4 inches by 2 3/4 inches. Maximum size cannot exceed 5 inches by 5 inches. The tag shall be white in color and have a self adhesive backing. The following information and wording shall be required to be preprinted on the front side of the tag:

1. "DO NOT REMOVE BY ORDER OF THE STATE FIRE MARSHAL" (all capital letters, in bold type);

2. installation tag;

3. installation date;

4. firm's name;

5. firm's certificate number;

6. technician's name;

7. technician's license number;

8. technician's signature;

9. NFPA code edition system was installed under;

10. plan review or exemption number;

11. serial or model number of panel, if applicable.

B. All tags shall have a signature line for the technician to sign the tag upon completion of the work. No preprinted signatures are permitted. Technicians must sign the tag; initials are not permitted. Other information to be completed on the tag may be either handwritten or preprinted. Apprentices are not permitted to sign tags.

C. If after initial installation a control panel is replaced for any reason, a new installation tag shall be completed and attached as above, noting the appropriate changes in information.

D. Copies of certificates of compliance required to be completed by this office shall be attached to the system in a plastic pocket pouch/sleeve or given to the owner for filing.

AUTHORITY NOTE: Promulgated in accordance with R.S. 40:1664.2 et seq.
HISTORICAL NOTE: Promulgated by the Department of Public Safety and Corrections, Office of State Fire Marshal, LR 37:2743 (September 2011).

§3237. Certification Tags, Service Tags, Partial Impairment Tags, Impairment Tags (Special Locking Systems and Equipment Only)

A. Certification Tags (Green Tags)

1. All firms engaged in property protection activity of special locking systems and equipment shall have a certification tag which shall be completed and attached to a special locking system, after it has been certified, inspected, installed, or integrated indicating all work that has been done.

2. Certification tags shall be green in color.

3. The certification tag shall be attached at the control panel or if no panel, at the connection to the power source (breaker panel).

4. The certification tag shall be attached in such a way as to not hamper the actuation and operation of the equipment or system.

5. A certification tag shall be attached on all systems or equipment found to be in proper working condition and which are found to be in an operational condition per the inspection, testing and maintenance chapters of the

applicable NFPA codes and standards. This tag shall be used for new installations and shall be in addition to the installation tag provided for in these rules.

6. Certification tags must contain all of the information listed below. Information shall be preprinted on the tag unless noted otherwise:

a. "DO NOT REMOVE BY ORDER OF THE STATE FIRE MARSHAL" (all capital letters in bold face type);

b. firm's name, physical address and telephone number;

c. firm's state fire marshal certificate number;

d. technician's name and state fire marshal license number to be printed on tag either at the time of service or preprinted;

e. technician's signature to be signed at time of service (no preprinted signatures nor initials are permitted; apprentices are not permitted to sign tags);

f. day, month and year in which the certification was performed (must be punched through certification tag at designated marks for day, month and year; designated marks for day, month and year shall only be punched once per tag);

g. type of work performed. Only installation or certification shall be noted on tag for type of work performed (must be punched through the certification tag);

i. "Installation" shall be punched on the tag when the special locking system or equipment is initially placed into use or after an addition or extension to the system has been made. Punching "Installation" indicates the initial certification of the system or equipment has been completed;

ii. "Certification" shall be punched on the tag when the special locking system or equipment has its annual inspection. Punching "Certification" indicates that any required service performed to the system or equipment at the time has been completed;

iii. specifics as to the type of work performed shall be noted on rear of tag, (i.e. new installation, annual certification, etc);

h. serial number of special locking system's control panel if present;

i. owner of system and address of owner (to be noted on rear of tag).

7. Other information may be permitted on the tag after a review and approval by the fire marshal. A request for additional information shall be made to the fire marshal in writing with a sample tag indicating the requested additions.

B. Service Tags (Blue Tags)

1. All firms engaged in property protection activity of special locking systems and equipment shall have a service tag which shall be completed and attached to a special locking system, after it has been maintained or serviced indicating all work that has been done.

2. Service tags shall be blue in color.

3. The service tag shall be attached at the control panel or if no panel, at the connection to the power source (breaker panel).

4. The service tag shall be attached in such a way as to not hamper the actuation and operation of the equipment or system.

5. A service tag shall be attached on all systems or equipment found to be in proper working condition after maintenance or service and which are found to be in an operational condition per the inspection, testing and maintenance chapters of the applicable NFPA codes and standards. This tag shall also be used for all service and maintenance where the system is found to meet the above conditions.

6. Service tags must contain all of the information listed below. Information shall be preprinted on the tag unless noted otherwise;

a. "DO NOT REMOVE BY ORDER OF THE STATE FIRE MARSHAL" (all capital letters in bold face type);

b. firm's name, physical address and telephone number;

c. firm's state fire marshal certificate number;

d. technician's name and state fire marshal license number to be printed on tag either at the time of service or preprinted;

e. technician's signature to be signed at time of service (no preprinted signatures nor initials are permitted; apprentices are not permitted to sign tags);

f. day, month and year in which service was performed (must be punched through service tag at designated marks for day, month and year; designated marks for day, month and year shall only be punched once per tag);

g. type of work performed. Only "Service" shall be noted on tag for type of work performed;

i. "service" tags shall be used when the special locking system or equipment is repaired or replaced to ensure proper operation in between required certification periods;

ii. specifics as to the type of work performed shall be noted on rear of tag (i.e. changed push button, repaired motion detector, etc);

h. serial number of special locking system's control panel if present;

i. owner of system and address of owner (to be noted on rear of tag).

7. Other information may be permitted on the tag after a review and approval by the fire marshal. A request for additional information shall be made to the fire marshal in writing with a sample tag indicating the requested additions.

C. Partial Impairment Tags (Yellow Tags).

1. All firms engaged in property protection activity of special locking systems and equipment shall be allowed to

have a partial impairment tag, to be yellow in color, which is to be used when minor deficiencies are found on the equipment or system. The partial impairment tag is in addition to the requirement of having a service tag and impairment tag.

2. A partial impairment tag may be placed on all equipment or systems in which there is a deficiency with the equipment or system but where the equipment or system is still functional. This would include situations where routine service is needed but has not been approved by the owner of the equipment or system.

3. A partial impairment tag shall not remain on equipment or a system for more than 60 days. If the problem is not corrected after 60 days the certified firm shall be required to notify, in writing, the Office of State Fire Marshal Inspection Section. The firm does not have to physically return to the building for re-inspection. The mailing of the impairment notice is sufficient.

4. Partial impairment tags must contain all of the information listed below. Information shall be preprinted on the tag unless noted otherwise:

a. "DO NOT REMOVE BY ORDER OF THE STATE FIRE MARSHAL" (all capital letters in bold face type);

b. firm's name, physical address and telephone number;

c. firm's state fire marshal certificate number;

d. technician's name and state fire marshal license number to be printed on tag either at the time of service or preprinted;

e. technician's signature to be signed at time of inspection (no preprinted signatures nor initials are permitted; (apprentices are not permitted to sign tags);

f. day, month and year in which the impairment was found (to be punched through service tag at designated marks for day, month and year; designated marks for day, month and year shall only be punched once per tag);

g. type of impairment found (to be hand written on rear of tag); I\if additional space is needed to note the impairments, then multiple tags shall be used noting 1 of 2, 2 of 2, etc.;

h. serial number of special locking system’s control panel if present;

i. business owner or tenant and physical address of where the system is located (to be noted on rear of tag).

D. Impairment Tags (Red Tags)

1. All firms engaged in property protection activity of special locking systems and equipment shall have an impairment tag, to be red in color, which is to be used when major deficiencies are found on these systems or equipment.

2. An impairment tag shall be placed on all special locking systems upon discovery that the system or equipment is impaired to the point that life safety is at risk or to the point that the automatic or manual release on the system will be prevented from functioning as intended.

3. Impairment tags shall also be placed on any equipment or system where life safety is in imminent danger.

4. Written notice shall be made to the owner and to the Office of State Fire Marshal Inspection Section by the certified firm as soon as is practically possible but shall not exceed two working days after the system or equipment is red tagged. Notification to the Office of State Fire Marshal is not needed for fire hoses removed from service. Written notification can be by electronic mail or facsimile. The Office of State Fire Marshal shall provide a form for notification. Additional notification (written or verbally) should be made to the local fire department when a system is red tagged.

5. Impairment tags must contain all of the information listed below. Information shall be preprinted on the tag unless noted otherwise:

a. "DO NOT REMOVE BY ORDER OF THE STATE FIRE MARSHAL" (all capital letters in bold face type);

b. firm's name, physical address and telephone number;

c. firm's state fire marshal certificate number;

d. technician's name and state fire marshal license number to be printed on tag either at the time of service or preprinted;

e. technician's signature to be signed at time of inspection (No preprinted signatures nor initials are permitted.) (Apprentices are not permitted to sign tags.);

f. day, month and year in which the inspection was performed (to be punched through service tag at designated marks for day, month and year; designated marks for day, month and year shall only be punched once per tag);

g. type of impairment found (to be hand written on rear of tag); if additional space is needed to note the impairments, then multiple tags shall be used noting 1 of 2, 2 of 2, etc.;

h. serial number of special locking system’s control panel if present;

i. business owner or tenant and physical address of where the system is located (to be noted on rear of tag).

6. Notification of special locking equipment/systems inspections where no deficiencies are found need not be sent to the Office of State Fire Marshal unless specifically requested.

E. Written Notification. The following information is required to be sent when written notification is made to the Office of State Fire Marshal Inspection Section:

1. name, address, and telephone number of the owner of the system;

2. name, address, telephone number, and certificate number of the firm noting the impairment;

3. name and license number of the technician who did the certification, inspection, maintenance, or service;

4. type of system (manufacturer and model number should also be included);

5. the name and year edition of the code or standard the firm used for inspection;

6. reason for the impairment. Note: A copy of the inspection or service report shall be included; and

7. date system or equipment was red or yellow tagged.

F. Other Requirements

1. On all special locking systems, a plastic pocket pouch/sleeve shall be attached to the control panel, or near the power source when no control panel is installed, where all tags shall be maintained for a period of one year after the system's annual certification. Upon a new annual certification, all previous service tags may be removed and given to the owner to keep on file.

2. All tags must be card stock, plastic, vinyl, tyevak or metal in order to maintain the running record for the system.

3. All tags shall be 5 1/4 inches in height and 2 5/8 inches in width.

4. Firms shall have their tags printed and one forwarded to the state fire marshal's Licensing Section for approval and incorporation in the firm's file.

5. Tags may be removed only by licensed employees of a certified firm or employees of the state fire marshal's Office and certified fire prevention bureaus.

AUTHORITY NOTE: Promulgated in accordance with R.S. 40:1664.2 et seq.

HISTORICAL NOTE: Promulgated by the Department of Public Safety and Corrections, Office of State Fire Marshal, LR 37:2744 (September 2011).

§3241. Fair and Ethical Business Practices

A. Property protection firms and employees shall conduct all business practices in compliance with all applicable laws.

B. Property protection firms and employees shall impartially analyze safety or security problems of their customers and advance the best possible solution for the protection of the customer.

C. Property protection firms and employees shall not misrepresent any business claims to the customer.

D. Property protection firms and employees shall not misrepresent the features afforded by any product nor make unwarranted claims about the merits of any product or service they offer. Examples include, but are not limited to the following:

1. representing to a client that non-restricted or widely available keys (whether stamped "Do Not Duplicate" or not) provide any measure of assurance against unauthorized duplication;

2. selling a used product as new;

3. claiming the customer's existing equipment is out of date or substandard when it is not.

E. Property protection firms and employees shall avoid using any improper or questionable means of soliciting business. Prohibited practices include, but are not limited to:

1. affixing stickers to permanent fixtures such as doors or door frames or in any way defacing the property of any person without his express consent;

2. installing stickers or any other promotions in such fashion that they falsely represent that the firm has previously serviced the system or equipment in that location;

3. installing or supplying systems or equipment which curtails the customer's ability to choose a different company or technician for product support or service, unless the firm obtains the customer's expressed written consent;

4. modifying the customer's hardware in any fashion that will curtail the customer's ability to choose a different company or technician for later product support or service or cause him to incur additional expense by doing so, unless the firm obtains the customer's express written consent;

5. claiming the customer's current contractor is out of business when it is not.

F. Property protection firms and employees shall not directly solicit in violation of a no compete agreement, such as an employee offering competing bids to customers of his employer.

AUTHORITY NOTE: Promulgated in accordance with R.S. 40:1664.2 et seq.

HISTORICAL NOTE: Promulgated by the Department of Public Safety and Corrections, Office of State Fire Marshal, LR 37:2746 (September 2011).

§3243. Prohibited Acts and Equipment

A. The following acts are prohibited and shall be considered grounds for administrative action to be taken against firms, persons and/or employees committing such:

1. charging a customer for work that was not performed;

2. misrepresenting oneself and/or one's firm to a customer, prospective customer or to employees of the state fire marshal, his designated representative or other public official;

3. impersonating the state fire marshal, his designated representative or any other public official;

4. intimidating or coercing a customer;

5. certifying, inspecting, installing, integrating, maintaining or servicing property protection systems and/or equipment contrary to plans submitted for review, applicable NFPA codes, standards, and/or manufacturer's specifications without specific written permission from the Office of State Fire Marshal;

6. falsifying an application or any other document submitted to obtain a certificate or license or other

documentation requested by or submitted to the Office of State Fire Marshal;

7. falsifying tags, labels, inspection reports, invoices, system reports and/or other documents;

8. working an apprentice, or as an apprentice, without direct supervision by a technician licensed to perform the work being done and licensed to the same firm;

9. working an employee without the appropriate endorsement of license;

10. working without the appropriate endorsement of firm certificate or license;

11. working with an expired firm certificate or license;

12. failing to notify the Office of State Fire Marshal of any changes that affect licensure;

13. failing to notify local law enforcement or fire service agencies of the installation of a smoke inducing security system;

14. contracting to a firm or person who is not properly certified or licensed through the Office of State Fire Marshal to perform acts regulated by the provisions of R.S. 40:1664.1 et seq., or these rules;

15. failing to adhere to the tagging and/or notification policies of the Office of State Fire Marshal;

16. installing a special locking system prior to submitting plans and required documentation and receiving authorization to install such system from the Plan Review Section of the Office of State Fire Marshal;

17. failing to possess the equipment, tools, NFPA codes, standards or manufacturer's UL listed installation and service manuals to properly certify, inspect, install, integrate, maintain or service the systems or equipment for which a firm is certified;

18. failing to adhere to all applicable laws and rules governing property protection systems and/or equipment as promulgated by the Office of State Fire Marshal;

19. engaging in false, misleading or deceptive acts or unfair or unethical business practices;

20. aiding and abetting an unlicensed person or firm to engage in property protection activity;

21. aiding and abetting a person or firm to certify, install, inspect, or service property protection systems or equipment contrary to code or manufacturer specifications;

22. failing to adhere to local ordinances regarding solicitation, permitting and occupational licensing and activities.

AUTHORITY NOTE: Promulgated in accordance with R.S. 40:1664.2 et seq.

HISTORICAL NOTE: Promulgated by the Department of Public Safety and Corrections, Office of State Fire Marshal, LR 37:2746 (September 2011).

§3245. Enforcement

A. The State Fire Marshal or his designated representative, shall make, or cause to be made, from time to time, inspections of a firm's physical locations, vehicles or job sites to verify required certificates, employee lists, employee licenses, business records and insurances, equipment, tools, NFPA codes, standards and manufacturer's manuals and property protection activity performed, and as circumstances dictate, to determine that firms and their employees are engaging in activity in accordance with the requirements of R.S. 40:1664.1 et seq., and these rules.

B. The State Fire Marshal shall investigate all complaints of alleged violations of R.S. 40:1574 et seq., 40:1664.1 et seq., and these Rules. Complaints of alleged violations shall be made in writing to the Licensing Section of the State Fire Marshal's Office. The office shall make available a complaint form to be used as needed. Penalties shall be administered to those firms and/or employees found to have violated these laws and/or rules. Proposed administrative penalty letters shall act as official notification of alleged violations.

AUTHORITY NOTE: Promulgated in accordance with R.S. 40:1664.2 et seq.

HISTORICAL NOTE: Promulgated by the Department of Public Safety and Corrections, Office of State Fire Marshal, LR 37:2747 (September 2011).

§3247. Administrative Actions

A. The State Fire Marshal may refuse the issuance or renewal of, suspend, or revoke a certificate of registration, or license and impose administrative penalties, if, after notice, as provided for by the Administrative Procedures Act, it is found that a person, certified firm, or licensee or an applicant for registration, or license, failed to comply with the provisions of R.S. 40:1664.1 et seq., or these Rules. The State Fire Marshal may consider violations in other states or failing to pay outstanding fine amounts as grounds for refusing the issuance of or the renewing of a certificate of registration or license. Additionally, where it is brought to the attention of the state fire marshal, violations in other states or failing to pay outstanding fine amounts may result in the suspension of or revocation of a certificate of registration or license.

1. Offenses. The following categories shall denote classification of offenses for persons, firms and employees for determining the penalty to be imposed:

a. minor:

i. failing to notify the Office of State Fire Marshal of any changes that affect licensure;

ii. Failing to adhere to the tagging and/or notification policies of the Office of State Fire Marshal;

iii. working with an expired (31-45 days) license or certificate of registration;

iv. failing to properly display a firm certificate;

b. serious:

i. failing to notify local law enforcement or fire

service agencies of the installation of a smoke inducing security system;

ii. working an apprentice, or as an apprentice, without direct supervision by a technician licensed to perform the work being done and licensed to the same firm;

iii. working an employee without the appropriate endorsement of license;

iv. working without the appropriate endorsement of firm certificate or license;

v. working with an expired (46-60 days) license or firm certificate;

vi. contracting to a firm or person who is not properly certified or licensed through the Office of State Fire Marshal to perform acts regulated by the provisions of R.S. 1664.1 et seq., or these rules;

vii. failing to possess the equipment, tools, NFPA codes, standards or manufacturer's UL listed installation and service manuals to properly certify, inspect, install, integrate, maintain or service the systems or equipment for which a firm is certified;

viii. failing to adhere to local ordinances regarding solicitation, permitting and occupational licensing activities;

ix. committing five or more minor offenses within a three-year period;

c. major:

i. charging a customer for work that was not performed;

ii. impersonating the state fire marshal, his designated representative or any other public official;

iii. intimidating or coercing a customer;

iv. misrepresenting oneself and/or one's firm to a customer, prospective customer or to employees of the Office of State Fire Marshal, his designated representative or other public official;

v. falsifying an application or any other document submitted to obtain a certificate or license or other documentation requested by or submitted to the Office of State Fire Marshal;

vi. falsifying tags, labels, inspection reports, invoices and/or other documents;

vii. working without any or with a suspended firm certificate of registration or license;

viii. working an employee with a suspended license;

ix. aiding and abetting an unlicensed person or firm to engage in property protection activity.

x. certifying, inspecting, installing, integrating, maintaining or servicing special locking systems and/or equipment contrary to plans submitted for review, applicable NFPA codes, standards, and/or manufacturer's specifications without specific written permission from the Office of State Fire Marshal;

xi. aiding and abetting a person or firm to certify, install, inspect, or service property protection systems or equipment contrary to code or manufacturer specifications;

xii. installing a special locking system or equipment prior to submitting plans and required documentation and receiving authorization to install such system from the Plan Review Section of the Office of State Fire Marshal;

xiii. committing three or more Serious offenses within a three year period;

xiv. engaging in false, misleading or deceptive acts or unfair or unethical business practices.

2. Penalties. The following fine schedule shall be used to access fines to persons, firms, and/or employees who violate the laws and rules governing property protection activity. Penalties will be imposed to persons, firms and/or employees based on the classification of offense. Each classification of offense will have a minimum and maximum fine shown and any other administrative penalty that may be imposed.

a. Firms and/or persons

i. minor: $50 fine to $250 fine and/or official warnings may be imposed;

ii. serious: $250 fine to $1,000 fine and/or suspensions of up to 90 days may be imposed;

iii. major: $1,000 fine to $5,000 fine and/or suspensions from 91 to 365 days may be imposed and/or revocation of certificate may be imposed.

b. Employees and/or persons:

i. minor: $10 fine to $50 fine and/or official warnings may be imposed;

ii. serious: $50 fine to $500 fine and/or suspensions of up to 90 days may be imposed;

iii. major: $500 to $5,000 fine and/or suspensions from 91 to 365 days may be imposed and/or revocation of license may be imposed.

c. The State Fire Marshal may deviate from this fine schedule where circumstances and/or evidence warrant a more stringent or more lenient penalty.

d. In lieu of fine payments, the state fire marshal may require remedial or additional training be obtained by those found in violation.

e. Those offenses not enumerated in this list shall receive penalties for violations of similar nature.

f. The Office of State Fire Marshal may also pursue criminal charges or injunctive relief for any of the above enumerated offenses.

AUTHORITY NOTE: Promulgated in accordance with R.S. 40:1664.2 et seq.

HISTORICAL NOTE: Promulgated by the Department of Public Safety and Corrections, Office of State Fire Marshal, LR 37:2747 (September 2011).

§3249. Severability

A. If any provision of these rules or the application thereof to any firm, person, employee or circumstance is held invalid for any reason, the invalidity shall not affect the other provisions or any other application of these rules which can be given effect without the invalid provisions or application. To this end, all provisions of these rules are declared to be severable.

AUTHORITY NOTE: Promulgated in accordance with R.S. 40:1664.2 et seq.
HISTORICAL NOTE: Promulgated by the Department of Public Safety and Corrections, Office of State Fire Marshal, LR 37:2748 (September 2011).

§3251. Adopted Standards

A. The office adopts by reference in their entirety those copyrighted codes or standards enumerated in LAC 55:V:103 published by and available from the National Fire Protection Association, Inc.(NFPA), Batterymarch Park, Quincy, Massachusetts, 02268. A copy of the codes and standards shall be kept available for public inspection in the Office of State Fire Marshal. In addition to those listed standards, the following shall also be adhered to as applicable:

1. ASME/ANSI A17.1—Safety Code for Elevators and Escalators;

2. ASME/ANSI A17.3—Safety Code for Existing Elevators and Escalators;

3. ASME/ANSI A117.1—Specifications for Handicapped Accessibility;

4. ADAAG—American Disability Accessibility Act Guidelines;

5. United States Department of Transportation;

6. Code of Federal Regulations 49.

AUTHORITY NOTE: Promulgated in accordance with R.S. 40:1664.2 et seq.
HISTORICAL NOTE: Promulgated by the Department of Public Safety and Corrections, Office of State Fire Marshal, LR 37:2748 (September 2011)

§3253. National Recognized Testing Laboratory

A. This office approves Underwriters Laboratories, Inc., Factory Mutual Research Corporation, the United States Testing Company, Inc. and Intertek-ETL as nationally recognized testing laboratories for the purpose of these rules.

AUTHORITY NOTE: Promulgated in accordance with R.S. 40:1664.2 et seq.
HISTORICAL NOTE: Promulgated by the Department of Public Safety and Corrections, Office of State Fire Marshal, LR 37:2748 (September 2011).

§3255. Equipment and Facilities

A. Each certified firm location shall be required to possess the equipment, tools, NFPA codes, standards and manufacturer's UL listed installation and service manuals necessary to properly certify, inspect, install, integrate, maintain or service the systems or equipment for which it is certified. Required codes, standards and manuals may be either in print or in an electronic format.

B. The following equipment and code books shall be required depending upon the firm's certification endorsement:

1. security:

a. certification, service, partial impairment (optional) and impairment tags;

b. installation tags;

c. NFPA 70, 72, 80 and 101 (latest edition as enumerated in LAC 55:V.103);

d. copy of life safety and property licensing law and rules;

e. manufacturer’s installation manuals;

f. sound level meter;

2. household fire warning;

a. NFPA 70, 72 and 101 (latest edition as enumerated in LAC 55:V.103);

b. copy of life safety and property licensing law and rules;

c. manufacturer’s installation manuals;

d. sound level meter;

3. closed circuit television:

a. NFPA 70 (latest edition as enumerated in LAC 55:V.103);

b. copy of life safety and property licensing law and rules;

c. manufacturer’s installation manuals;

4. locksmith:

a. certification, service, partial impairment (optional) and impairment tags;

b. installation tags;

c. NFPA 70, 80 and 101 (latest edition as enumerated in LAC 55:V.103);

d. copy of life safety and property licensing law and rules;

e. manufacturer’s installation manuals;

5. bank locking:

a. NFPA 70, 80 and 101 (latest edition as enumerated in LAC 55:V.103);

b. copy of life safety and property licensing law and rules;

c. manufacturer’s installation manuals;

6. detention locking:

a. certification, service, partial impairment (optional) and impairment tags;

b. installation tags;

c. NFPA 70, 80 and 101 (latest edition as enumerated in LAC 55:V.103);

d. copy of life safety and property licensing law and rules;

e. manufacturer's installation manuals;

7. door hardware:

a. NFPA 70, 80 and 101 (latest edition as enumerated in LAC 55:V.103);

b. copy of life safety and property licensing law and rules;

c. manufacturer's installation manuals;

8. door hardware installation:

a. NFPA 70, 80 and 101 (latest edition as enumerated in LAC 55:V.103);

b. copy of life safety and property licensing law and rules;

c. manufacturer's installation manuals;

9. special locking:

a. certification, service, partial impairment (optional) and impairment tags;

b. installation tags;

c. NFPA 70, 80 and 101 (latest edition as enumerated in LAC 55:V.103);

d. copy of life safety and property licensing law and rules;

e. manufacturer's installation manuals;

10. gate systems:

a. certification, service, partial impairment (optional), and impairment tags;

b. installation tags;

c. NFPA 70, 80 and 101 (latest edition as enumerated in LAC 55:V.103);

d. copy of life safety and property licensing law and rules;

e. manufacturer's installation manuals.

C. The State Fire Marshal or his representative(s) may inspect a firm's physical location(s) or vehicle(s) to ensure the proper equipment, tools, NFPA codes, NFPA standards, manufacturer's UL listed installation and service manuals and business records and insurances are possessed by the firm. Firms must possess all applicable manufacturers' installation and service manuals for the systems and/or equipment it services.

D. Each Louisiana operating location must house all business records of the firm. Business records may be either electronic or hard copies. Business records shall include, but not be limited to, invoices, work orders, service reports, payroll records, federal and state tax information for employees, occupational licenses, local solicitation permits, income tax filings, property tax notifications and filings, utility records, certificates of insurance for general liability and workmen compensation coverage and workers compensation reports and/or filings.

E. The State Fire Marshal or his representative(s) may require that a firm or its employee(s) demonstrate a proficiency to use the necessary equipment to properly certify, inspect, install, integrate, maintain or service special locking systems and equipment. Proficiency shall be deemed to be achieved if the system or equipment complies with the applicable NFPA code or standard and/or manufacturer's specifications.

F. For those firms or their employee(s) which do not possess the proper equipment, tools and manuals or who fail to demonstrate the ability to properly perform the required work, then an order of correction shall be made to the contractor or his employee to obtain the required equipment, tools, NFPA codes, standards or manual or to obtain additional training within a specified time period. Another inspection shall be conducted by the state fire marshal or his representative to verify compliance with the order of correction. Good cause must be shown if proficiency is not shown or the required equipment, tools, NFPA codes, standards or manuals are not obtained by the time of the second inspection. Additional time may be granted for good cause. If good cause is not shown, then administrative action may be pursued.

G. The office may specifically enumerate additional required equipment or business records at a later date should it be deemed necessary.

AUTHORITY NOTE: Promulgated in accordance with R.S. 40:1664.2 et seq.

HISTORICAL NOTE: Promulgated by the Department of Public Safety and Corrections, Office of State Fire Marshal, LR 37:2748 (September 2011).

§3257. Plan Review

A. No special locking system requiring plan submittal in accordance with R.S. 40:1574 et seq., shall be installed prior to submitting plans with required documentation and receiving authorization to install such system from the Plan Review Section of the Office of State Fire Marshal. However, the installation of wiring only for a special locking system shall be permitted upon receipt of plans and a project review number being issued by the Office of State Fire Marshal, Plan Review Section. No system locks, devices or panels shall be installed prior to review or written authorization by the Office of State Fire Marshal.

B. All submittals for plan review shall identify the licensed firm performing the installation and the responsible qualifier. The firm that is responsible for the installation of the locks shall be the firm listed as the installation firm.

C. Only listed qualifiers of a firm shall be listed on applications for full plan review or exemption to full plan review. Additionally, any correspondence regarding a submittal, to include but not be limited to, telephone, email or written correspondence, shall only be through a listed qualifier of the firm, owner of the firm, a professional of record or owner of the building.

D. A new plan review shall be required when a firm takes over a project in progress from another firm, listing the new firm's information and any changes to the project.

AUTHORITY NOTE: Promulgated in accordance with R.S. 40:1664.2 et seq.

HISTORICAL NOTE: Promulgated by the Department of Public Safety and Corrections, Office of State Fire Marshal, LR 37:2750 (September 2011).

§3259. Electrical Contractors

A. All electrical contractors who have met all requirements and passed a prescribed written examination based upon National Fire Protection Association (NFPA) Code 70, the National Electrical Code, that has been given either by a recognized political subdivision of the State of Louisiana or by the State Licensing Board for Contractors, shall be authorized to install special locking systems, security, household fire and closed circuit television systems and equipment in accordance with manufacturer's specifications and applicable National Fire Protection Association (NFPA) codes as enumerated in LAC 55:V.103 and these rules.

B. The electrical contractor shall ensure that plans have been submitted and reviewed by the state fire marshal prior to installing any new or renovated special locking system. The system shall be certified by a property protection contractor upon the completion of the installation.

C. Electrical contractors are not permitted to certify, inspect or service special locking systems.

AUTHORITY NOTE: Promulgated in accordance with R.S. 40:1664.2 et seq.

HISTORICAL NOTE: Promulgated by the Department of Public Safety and Corrections, Office of State Fire Marshal, LR 37:2750 (September 2011).

§3261. Miscellaneous Provisions

A. Marking of vehicles. All service vehicles owned or operated by firms or their employees used for regulated activities, as defined by R.S. 40:1664.1 et seq., and these Rules shall have the firm name, firm certificate number and firm telephone number permanently inscribed, painted, stenciled or affixed by magnetic means on such vehicles. Such markings shall be a minimum of two and one-half inches in height and not less than one-forth inch in width. Letters and numbers shall be on a contrasting background and be conspicuously seen from the outside of the vehicle. This requirement does not prevent a firm to use an unmarked vehicle on special occasions where covert work is required.

B. Restrictions

1. Certificate or license holders are not agents or representatives of the State of Louisiana, the Department of Public Safety or the Office of State Fire Marshal. No claims or inferences of such shall be made.

2. A certificate or license does not authorize anyone to enforce these Rules or to enter any building without the owner's permission or to engage in property protection activity without the owner's permission.

3. Certificate and license holders shall not allow the use of their certificate or licenses by other firms, persons or employees.

4. A license holder shall not perform any property protection activity unless employed by and within the course and scope of that employment with a firm regulated by the provisions of R.S. 40:1664.1 et seq.

5. A person shall not perform any act for which a certificate or license is required unless:

a. first being certified or licensed to perform such acts; and

b. is employed by a firm certified to perform those acts; and

c. is performing those acts for the certified firm by which he is employed.

6. An apprentice, as defined in these rules, shall not perform any activity regulated by R.S. 40:1664.1 et seq., unless employed by a certified firm and directly supervised by a license holder authorized to perform such act or acts. Both the apprentice and licensee shall be employed by the same certified firm.

7. Nothing in these rules shall prevent an appropriately certified firm or licensed person from certifying, inspecting, installing, integrating, maintaining, selling, or servicing any manufacturer's system or equipment.

C. Multiple Names and Locations

1. If a firm uses multiple names (i.e. trade or "doing business as" names), it must apply for a separate certificate of registration for each name if the firm name has a separate state or federal tax number. If the firm name does not have a separate state or federal tax number, then if shall be permitted to be registered with the firm's primary name. Only one trade or "doing business as" name shall be permitted to be registered along with the firm's primary name. Any other name that the firm wishes to use must have its own certificate of registration and must meet all licensing requirements as a separate and independent firm.

2. If a firm uses multiple locations, each location must apply for and receive its own certificate of registration. Each location is considered a separate firm and must meet all licensing requirements for firms.

3. If a firm advertises telephone numbers for dispatch purposes in various locations but has no physical office in those locations, then the advertisement must indicate "For Dispatch Only."

D. Special Locking System Required Certification

1. A building owner shall ensure that each special locking system within his commercial business is certified annually. Only the following systems as outlined in NFPA 101 shall require an annual certification:

a. electronically controlled egress door assemblies;

b. health care locking systems;

c. delayed egress systems;

d. access controlled systems;

e. elevator lobby exit access door assembly locking systems;

f. pedestrian gate systems; and

g. detention locking systems.

2. Special locking systems shall be certified by a firm with the appropriate endorsement as follows:

Type of Endorsement	Type of System						
	Electronically Controlled Egress Door Assemblies	Health Care Locking Systems	Access Control Systems	Delayed Egress Systems	Elevator Lobby Exit Access Door Assembly Locking Systems	Pedestrian Gate Systems	Detention Locking Systems
Security	Yes	Yes	Yes	Yes	Yes	Yes	No
Locksmith	Yes	Yes	Yes	Yes	Yes	Yes	Yes
Special Locking	Yes	Yes	Yes	Yes	Yes	Yes	No
Gate Systems	No	No	No	No	No	Yes	No
Detention Locking	No	No	No	No	No	No	Yes

3. For the purpose of determining the exact date of a required certification, the following guidelines shall apply: where only the year is known but not the month, January shall be used for the month, where the month is known but not the day, the first day of the month shall be used.

4. Annual certifications must be performed between 30 days prior and 30 days after the previous year's certification date.

5. The certified firm shall not be responsible for more frequent inspections as required by the applicable engineered specifications, manufacturer's specifications or per the inspection, testing and maintenance chapters as set forth in the applicable NFPA codes and standards unless under contract to perform such.

E. Advertising. All advertising indicating property protection activity within Louisiana, including but not limited to telephone advertising, bids, letter head and business cards, shall indicate a firm's certificate of registration number, the firm's physical address and local telephone number. Yard signs must include the firm's certificate of registration number and may include a monitoring station telephone number. They do not need to include the firm's local telephone or physical address.

F. Service Invoices and Inspection Reports. All service invoices or inspection reports shall reflect the inspection, installation, integration, maintenance, or service performed, all parts replaced, date of service, the firm name, the firm certificate number, the technician's name who performed the work and the technician's license number.

G. Locking Service Record Keeping

1. A locksmith who bypasses, manipulates, or originates a first key by code for a device safeguarding an area where access is meant to be limited, whether or not for compensation, shall document:

a. where the work was performed;

b. the name, address, date of birth, telephone number, and driver's license number or other identification number of the person requesting the work to be done; and

c. the signature of that person.

2. A copy of the work order form shall be kept by the licensed locksmith for a period of two years and shall include:

a. the name and license number of the locksmith; or

b. the name and identification number of the registered employee who performed the services.

3. Work order forms required to be kept under this Section shall be available for inspection upon written request made three days in advance by the state fire marshal or his representative(s) or a law enforcement agency.

4. A locksmith who bypasses, manipulates, or originates a first key for a motor vehicle, whether or not for compensation, shall document:

a. the name, address, date of birth, telephone number, vehicle identification number, and driver's license number or other identification number of the person requesting entry; and

b. the signature of that person.

5. A copy of the work order form shall be kept by the licensed locksmith for a period of two years and shall include:

a. the name and license number of the locksmith; or

b. the name and identification number of the registered employee who performed the services.

6. Work order forms required to be kept under this Section shall be available for inspection upon written request made three days in advance by the state fire marshal or his representative(s) or a law enforcement agency.

H. Security System Panels, Factory Default Code Reset

1. A security system owner who wishes to change security firms must notify the existing firm in writing of his wishes if he desires to have the panel program code reset. All financial obligations of the system owner to the existing firm must be met prior to firm being required to reset the panel program code to factory default.

2. The firm shall return the panel program code to factory default within five working days upon written notice by the system owner.

3. Where a panel program code cannot be reset to factory default, then the panel shall be cleared of its memory to allow complete reprogramming or the existing firm shall install a new control panel for the security system owner.

4. This provision does not apply to panels which are proprietary in nature and will not work unless monitored and/or maintained by the proprietary firm.

AUTHORITY NOTE: Promulgated in accordance with R.S. 40:1664.2 et seq.
HISTORICAL NOTE: Promulgated by the Department of Public Safety and Corrections, Office of State Fire Marshal, LR 37:2750 (September 2011).

Chapter 34. Fire-resistant Material Applicators

§3401. Purpose

A. The provisions of this Chapter are to establish the training, registration and certification requirements for fire-resistant material applicators. The requirements for the enforcement of these provisions are established by this chapter in the interest of protecting and preserving lives pursuant to authority of R.S. 40:1603.

AUTHORITY NOTE: Promulgated in accordance with R.S. 40:1563 and R.S. 40:1603.
HISTORICAL NOTE: Promulgated by the Department of Public Safety and Corrections, Office of the State Fire Marshal, LR 47:253 (February 2021).

§3403. Administration

A. The Office of State Fire Marshal, which administers the provisions of R.S. 40:1603, relating to fire-resistant material applicators, is located at 8181 Independence Blvd., Baton Rouge, LA 70806.

AUTHORITY NOTE: Promulgated in accordance with R.S. 40:1563 and R.S. 40:1603.
HISTORICAL NOTE: Promulgated by the Department of Public Safety and Corrections, Office of the State Fire Marshal, LR 47:253 (February 2021).

§3405. Applicability of Rules

A. These rules shall apply to all persons engaged in the activity of fire-resistant material application.

AUTHORITY NOTE: Promulgated in accordance with R.S. 40:1563 and R.S. 40:1603.
HISTORICAL NOTE: Promulgated by the Department of Public Safety and Corrections, Office of the State Fire Marshal, LR 47:253 (February 2021).

§3407. Exceptions

A. These rules shall not apply to firms that employ persons engaging in the activity of fire-resistant material application. The requirements only apply to the individual fire-resistant material applicators.

B. These rules do not apply to any persons or firms engaged in the application of fire-stopping material.

AUTHORITY NOTE: Promulgated in accordance with R.S. 40:1563 and R.S. 40:1603.
HISTORICAL NOTE: Promulgated by the Department of Public Safety and Corrections, Office of the State Fire Marshal, LR 47:253 (February 2021).

§3409. Notices by the State Fire Marshal

A. Any notice required to be given by the Office of State Fire Marshal by any provision of law or these rules shall be provided as follows:

1. personal or domiciliary service or mailed, postage prepaid, to the person's residence and/or firm address as it appears on the records in the Office of State Fire Marshal. It is the responsibility of the person involved to ensure that the Office of State Fire Marshal has a correct address for the person and firm; or

2. electronic transmission or electronic mail (email) if the electronic transmission or email is retrievable in a perceivable form and the office and recipient have consented in writing to the use of such form of electronic transmission or email for purposes of notice or communication between the parties. It is the responsibility of the applicant or registered individual to ensure that the Office of State Fire Marshal has a correct email address for the person and firm.

AUTHORITY NOTE: Promulgated in accordance with R.S. 40:1563 and R.S. 40:1603.
HISTORICAL NOTE: Promulgated by the Department of Public Safety and Corrections, Office of the State Fire Marshal, LR 47:253 (February 2021).

§3411. Definitions

A. The following words and terms, when used in these rules, shall have the following meanings, unless the context clearly indicates otherwise.

Certificate of Registration—that document issued by the Office of State Fire Marshal to a person authorizing him or her to engage in fire-resistant material activity, certifying that he or she has obtained the appropriate training as required in R.S. 40:1603 and these rules.

Digital Registration Identification—that electronic document provided by the Office of State Fire Marshal to a person registered to engage in fire-resistant material activity, with the ability to be displayed on a phone or other electronic device bearing a photographic image of the person and his or her name, evidencing the Office of State Fire Marshal's authorization of the person to engage in the activities as defined by these rules.

Fireproofing—the act of rendering an object, such as a structure or material, resistant to fire or incombustible via

the application of a listed and approved fire-resistant material.

Fire-Resistant Material—includes cementitious, fibrous and intumescent materials that are sprayed or applied onto a surface to provide fire-resistant protection of the substrate.

Fire-Resistant Material Activity—the application or the act of applying fire-resistant material onto a surface to provide fire-resistant protection of the substrate.

Fire-Resistant Material Applicator—an individual who applies fire-resistant material.

Firestops or Fire-Stopping Material—a listed and approved material used as a form of passive fire protection that is utilized for sealing around openings and penetrations in fire-rated walls or flooring. The purpose of the utilization of firestops and/or fire-stopping material is to impede the spread of fire and smoke from one room or area to an adjacent room or area. Fire-resistant material is not included in this definition.

Firm—a sole proprietorship, partnership, corporation, limited liability company, or any other entity that employs the individual fire-resistant material applicators.

Office—the Office of State Fire Marshal.

Person—a natural individual.

Pocket Registration Card—that document issued by the Office to a person registered to engage in fire-resistant material activity, in pocket size and bearing a photographic image of the person and his or her name, evidencing the Office of State Fire Marshal's authorization of the person to engage in the activities as defined by these rules.

Substrate—an underlying material or layer of materials upon which other materials are applied, such as a fire-resistant coating.

AUTHORITY NOTE: Promulgated in accordance with R.S. 40:1563 and R.S. 40:1603.

HISTORICAL NOTE: Promulgated by the Department of Public Safety and Corrections, Office of the State Fire Marshal, LR 47:253 (February 2021).

§3413. Registration Required

A. Any person engaged in fire-resistant material activity shall be registered in accordance with these rules prior to conducting any such activity in this state. Each person who is registered with the office shall receive a certificate of registration and a pocket registration card or a digital registration identification.

B. Any person described in Subsection A of this Section who has not registered with the office shall immediately cease such fire-resistant material activities. The office may take any steps necessary to enforce an order to cease and desist such activity.

AUTHORITY NOTE: Promulgated in accordance with R.S. 40:1563 and R.S. 40:1603.

HISTORICAL NOTE: Promulgated by the Department of Public Safety and Corrections, Office of the State Fire Marshal, LR 47:254 (February 2021).

§3415. Required Training and Certification

A. Required Certification

1. Applicants for fire-resistant material applicator registration are required to meet the certification requirements pursuant to R.S. 40:1603 and these rules.

B. Training and certification(s) acceptable to the Office shall include:

1. training provided by the manufacturer(s) of the fire-resistant spray materials specific to those that the applicator(s) will be utilizing. The applicant shall submit a copy of all relevant documentation, including training completion and certifications, to the office for verification of training provided by the manufacturer(s). If an individual applies fire-resistant spray material from multiple and/or varying manufacturers, the individual must have training and certification from each manufacturer. If an individual applies fire-resistant material of a manufacturer for which he or she has not received training and certification, that individual is considered unregistered and/or operating outside his certificate of registration and in violation of R.S. 40:1603 and these rules.

AUTHORITY NOTE: Promulgated in accordance with R.S. 40:1563 and R.S. 40:1603.

HISTORICAL NOTE: Promulgated by the Department of Public Safety and Corrections, Office of the State Fire Marshal, LR 47:254 (February 2021).

§3417. Initial Registration; Annual Renewals

A. Applicants for individual initial registration are required to meet the initial registration requirements. As such, applications shall provide the following information:

1. name;

2. address;

3. phone number;

4. email address;

5. firm name (if any);

6. firm address;

7. firm phone number; and

8. copies of manufacturers' training and/or certifications.

B. Annual registration renewals required. On or before the expiration date, which is displayed on the certificate of registration, each person shall submit an application for the renewal of their certificate.

C. Initial and renewal applications for certificates of registration shall be submitted on forms provided the Office of State Fire Marshal.

AUTHORITY NOTE: Promulgated in accordance with R.S. 40:1563 and R.S. 40:1603.

HISTORICAL NOTE: Promulgated by the Department of Public Safety and Corrections, Office of the State Fire Marshal, LR 47:254 (February 2021).

§3419. Certificate of Registration

A. Every person must obtain from the Office a certificate of registration as provided for by R.S. 40:1603, before engaging in fire-resistant material activity.

B. The following shall apply to certificates of registration.

1. Duplicates. A duplicate certificate or pocket registration card must be obtained from the Office to replace a lost or destroyed certificate or card. The certificate holder must submit written or electronic notification of the loss or destruction of the certificate within 10 days from the date of loss.

2. Revisions/Changes. The change of a person's name, mailing address, firm, firm address, phone number or email address requires a revision of the certificate of registration. Certificates requiring changes must be surrendered to the Office within ten calendar days after the change requiring the revision. The person must submit written notification of the change with the surrendered certificate.

3. Non-Transferability. A certificate of registration is not transferable from one person to another.

4. Validity. A certificate of registration is valid for one year and shall be renewed annually. For a certificate of registration to remain valid, the person must provide current documentation of required information and training, as established by the Office.

AUTHORITY NOTE: Promulgated in accordance with R.S. 40:1563 and R.S. 40:1603.

HISTORICAL NOTE: Promulgated by the Department of Public Safety and Corrections, Office of the State Fire Marshal, LR 47:254 (February 2021).

§3421. Alteration of Certificates of Registration.

A. Any alteration of a certificate of registration or pocket registration card renders both invalid and such alteration shall be the basis for administrative action in accordance with penalties set forth in R.S. 40:1603 and these rules.

AUTHORITY NOTE: Promulgated in accordance with R.S. 40:1563 and R.S. 40:1603.

HISTORICAL NOTE: Promulgated by the Department of Public Safety and Corrections, Office of the State Fire Marshal, LR 47:254 (February 2021).

§3423. Enforcement; Investigations

A. The state fire marshal or his/her designated representative shall investigate all complaints of alleged violations of R.S. 40:1603 and these rules. Complaints of alleged violations shall be made in writing to the Office of State Fire Marshal. The Office shall make available a complaint form to be used as needed. Penalties shall be administered to those persons found to have violated these laws and/or rules. Proposed administrative penalty letters provided to violators in accordance with these rules shall act as official notification of alleged violations.

AUTHORITY NOTE: Promulgated in accordance with R.S. 40:1563 and R.S. 40:1603.

HISTORICAL NOTE: Promulgated by the Department of Public Safety and Corrections, Office of the State Fire Marshal, LR 47:255 (February 2021).

§3425. Administrative Actions

A. The State Fire Marshal may refuse the issuance or renewal of, suspend, or revoke a certificate of registration and impose administrative penalties, if, after notice and hearing, as provided for by the Administrative Procedures Act, R.S. 49:950 et seq., it is found that a person failed to comply with the provisions of R.S. 40:1603 or these rules. Any person who is denied a certificate of registration, whose certificate of registration is suspended or revoked, or who receives an administrative penalty may appeal by requesting an administrative hearing. Requests for hearings shall be made in writing and mailed or hand delivered to the Office of State Fire Marshal, 8181 Independence Blvd., Baton Rouge, LA 70806 to be received by the Office of State Fire Marshal within 30 days from the date of the denial, suspension, revocation or administrative penalty.

1. Offenses

a. Any person applying fire-resistant material who is not registered with the office shall be fined up to $250 per violation.

b. Any person who does not receive the required training and/or does not obtain a certificate of registration in accordance with R.S. 40:1603 and these rules shall be fined up to $250 per violation.

c. Any person who continues to engage in fire resistant material activity and fails to annually register, herein referred to as renewing, shall be fined up to $250 per violation.

d. Any person subject to R.S. 40:1603 who fails to maintain his or her registration in accordance with R.S. 40:1603 and these rules shall be fined up to $250 per violation.

B. Fines shall be made payable to the Office of State Fire Marshal.

C. The Office of State Fire Marshal is empowered to notify any person or firm engaged in any activity, conduct, or practice constituting a violation of any provision of R.S. 40:1603, directing such person or firm to cease such activity, conduct, or practice without obtaining a certificate of registration. Such notification shall be in writing issued in the name of the Office of State Fire Marshal.

AUTHORITY NOTE: Promulgated in accordance with R.S. 40:1563 and R.S. 40:1603.

HISTORICAL NOTE: Promulgated by the Department of Public Safety and Corrections, Office of the State Fire Marshal, LR 47:255 (February 2021).

§3427. Severability

A. If any provision of these rules or the application thereof to a person is held invalid for any reason, the invalidity shall not affect the other provisions or any other application of these rules which can be given effect without

the invalid provisions or application. To this end, all provisions of these rules are declared to be severable.

AUTHORITY NOTE: Promulgated in accordance with R.S. 40:1563 and R.S. 40:1603.

HISTORICAL NOTE: Promulgated by the Department of Public Safety and Corrections, Office of the State Fire Marshal, LR 47:255 (February 2021).

§3429. Miscellaneous Provisions

A. Nothing in these rules shall prevent an appropriately-registered person from conducting the activity of fire-resistant material application.

B. Service Invoices. All service invoices shall reflect all fire-resistant material application activity, date the work was performed, the name of the employing firm and the name of the certified person(s) who performed the work.

AUTHORITY NOTE: Promulgated in accordance with R.S. 40:1563 and R.S. 40:1603.

HISTORICAL NOTE: Promulgated by the Department of Public Safety and Corrections, Office of the State Fire Marshal, LR 47:255 (February 2021).

Chapter 40. State Uniform Construction Code

§4001. State Uniform Construction Code

A. The Office of State Fire Marshal hereby adopts the 1997 edition of the Standard Building Code as published by the Southern Building Code Congress International, Inc., and the 1999 edition of the National Electrical Code as published by the National Fire Protection Association as the State Uniform Construction Code.

B. In accordance with the requirements set forth in R.S. 40:1725 et seq., plans and specifications for any and all buildings to be constructed in the state after December 20, 2001 shall comply with the minimum standards contained in the State Uniform Construction Code.

C. Alterations, remodeling or repairs performed after December 20, 2001 to existing buildings, shall be performed in accordance with the State Uniform Construction Code.

AUTHORITY NOTE: Promulgated in accordance with R.S. 40:1725, R.S. 40:1726, R.S. 40:1727, R.S. 40:1728, R.S. 40:1729 AND R.S. 40:1730.

HISTORICAL NOTE: Promulgated by the Department of Public Safety and Corrections, Office of State Fire Marshal, LR 28:1598 (July 2002).

Chapter 50. Boiler Construction, Maintenance, Inspection and General Use

Subchapter A. General Provisions

§5001. Preface

A.1. The objective of these rules and regulations is to promote safe and efficient boiler practices for the construction, repair, alteration, operation and inspection of all boilers, and to provide for inspection during fabrication, assembly, modification, repair or alteration of those pressure vessels which are required by the owner or user to:

a. meet American Society of Mechanical Engineers (ASME) rules for construction, and the National Board Inspection Code (NBIC) rules for repair; and

b. be stamped as meeting those rules; thereby insuring better protection of life and property.

2. To this end we invite the cooperation of all boiler and pressure vessel manufacturers, owners, users, operators and insurance companies.

B. It is intended that these rules and regulations will effect reasonable and adequate regulations governing the construction, maintenance, inspection and use of boilers, and provide for the inspection during fabrication, repair or alteration of those pressure vessels that are required by the owner or user to:

1. meet ASME and NBIC requirements; and

2. be stamped as meeting those rules.

C. These rules and regulations are not designed to provide an inspection program for unfired pressure vessels, except as provided for by the Act, however, inspections will be provided when requested by the owner or user. They are intended to promote uniform standards for the design, fabrication, repair, alteration and inspection of steam and hot water boilers, and the inspection during fabrication, repair or alteration of those pressure vessels that are required by the owner or user to:

1. meet ASME and NBIC requirements; and

2. be stamped as meeting those rules.

AUTHORITY NOTE: Promulgated in accordance with R.S. 23:531 and R.S. 51:1424.

HISTORICAL NOTE: Promulgated by the Department of Public Safety, Office of State Fire Marshal, LR 33:1350 (July 2007).

§5002. Application

A.1. The rules and regulations herein promulgated apply to all boilers subject to the provisions of the Louisiana Revised Statutes of 1950, Title 23, Chapter 5, Part III, Sections 531 through 545, (Except boilers exempted by R.S. 23:540), and to those pressure vessels that are required by the owner or user to:

a. meet ASME and NBIC requirements; and

b. be stamped as meeting those rules, as provided for by R.S. 23:531.

2. These rules and regulations shall conform as nearly as practicable to the ASME Boiler and Pressure Vessel Codes; Section I Power Boilers, 2004 Edition, 2005 Addendum; Section IV Heating Boilers, 2004 Edition, 2005 Addendum; Section V Non Destructive Examination, 2004 Edition, 2005 Addendum; Section VI-Recommended Rules for the Care and Operation of Heating Boilers, 2004 Edition, 2005 Addendum; Section VII Recommended Guidelines for the Care of Power Boilers, 2004 Edition, 2005 Addendum;

Section VIII Pressure Vessels to the extent the rules and regulations apply, 2004 Edition, 2005 Addendum; Section IX—Welding and Brazing Qualifications, 2004 Edition, 2005 Addendum; ASME B31.1 Power Piping, 2004 Edition, 2005 Addendum; ASME CSD. —1 Controls and Safety Devices for Automatically Fired Boilers, 2004 Edition (with the exception of Part CM-Testing and Maintenance), and NFPA 54 National Fuel Gas Code, 2002 Edition, adopted by the council of the American Society of Mechanical Engineers; and the National Board Inspection Code, 2004 Edition, 2005 Addendum.

B. Where the application of a rule would cause expense materially out of proportion to the increase of safety secured thereby, or would be unreasonable under the facts of the particular case, and safety can be secured in other ways, the assistant secretary may, upon adequate showing by the owner or user, grant an exemption of the rule complained of under such requirements as will secure a reasonable condition of safety.

C. The rules providing for inspection of new and existing installations shall apply to all boilers subject to the provisions of Act 264 of the Regular Session of 1938, as continued or substituted for by Title 23, Chapter 5, Part III, of the Louisiana Revised Statutes of 1950, regardless of whether inspected by an inspector employed by the Department of Public Safety or by an insurance company inspector, and shall apply to all boilers whether stationary or portable, insofar as is practical.

AUTHORITY NOTE: Promulgated in accordance with R.S. 23:531 and R.S. 51:1424.

HISTORICAL NOTE: Promulgated by the Department of Public Safety, Office of State Fire Marshal, LR 33:1351 (July 2007).

§5003. Definitions

Act—regulations affecting boilers, as enacted, amended and reenacted by the Legislature of Louisiana, herein referred to as the Louisiana Revised Statutes of 1950, Title 23, Chapter 5, Part III, Sections R.S. 23:531 through R.S. 23:545.

Alteration—a change in any item described on the original Manufacturers Data Report that affects the pressure containing capability of the boiler or pressure vessel. Non-physical changes such as an increase in maximum allowable working pressure (internal or external) or design temperature shall be considered an alteration. A reduction in minimum temperature such that additional mechanical test are required shall also be considered an alteration.

ASME—the American Society of Mechanical Engineers.

ASME Code—the American Society of Mechanical Engineers (ASME) Boiler and Pressure Vessel Code published by that society, including addenda and code cases, approved by its council and adopted by the assistant secretary, shall hereafter be known as the "Louisiana Boiler Construction Code." A copy of this code will be on file at the State of Louisiana, Department of Public Safety, Office of State Fire Marshal, Boiler Inspection Section, Baton Rouge, Louisiana.

Assistant Secretary—as used herein shall be the Fire Marshal for the State of Louisiana.

Authorized Inspection Agency—one of the following:

1. a department or division established by a jurisdiction which has adopted and does administer one or more sections of the ASME Code, one of which shall be Section I as a legal requirement, and whose inspectors hold valid commissions issued by the National Board of Boiler and Pressure Vessel Inspectors. For these rules this shall be the Boiler Inspection Section, Office of State Fire Marshal, State of Louisiana;

2. an insurance company which has been licensed or registered by the appropriate authority of a state of the United States or a Province of Canada, to write and does write boiler and pressure vessel insurance, and to provide inspection service of boilers and pressure vessels that they insure in such state or province, and whose inspectors meet the requirements of *Authorized Inspector* below.

Authorized Inspector—an inspector who holds a current commission as an inspector of boilers and other pressure vessels, issued by the National Board of Boiler and Pressure Vessel Inspectors; a certificate of competency and commission as a boiler inspector, issued by the Boiler Inspection Section, Office of State Fire Marshal, State of Louisiana.

Boiler—a vessel in which water is heated, steam is generated, steam is superheated, or any combination thereof, under pressure or vacuum for use external to itself, by the direct application of heat, that is heat resulting from the combustion of fuel, electrical elements, nuclear fuel, or waste gases. (Vessels known as evaporators or heat exchangers and vessels in which steam and other vapor is generated by the use of heat resulting from operation of a processing system containing a number of pressure vessels such as used in the manufacture of chemical and petroleum products, would be exempted from jurisdictional inspection requirements.) The term *boiler* shall include the following.

1. *Power Boiler*—a boiler in which steam is generated at a pressure of more than 15 psig.

2. *High Pressure/High Temperature Water Boiler*—a water boiler intended for operation at pressures in excess of 160 psig and/or temperatures in excess of 250° F.

3. *Heating Boiler*—a steam boiler operating at pressures not exceeding 15 psig, or a hot water boiler operating at pressures not exceeding 160 psig and/or temperatures not exceeding 250° F.

4. *Electric Boiler*—a power boiler or a hot water heating or supply boiler in which the source of heat is electricity.

5. *Miniature Boiler*—a power boiler or a high-temperature water boiler which does not exceed the following limits:

a. 16 inch inside diameter of shell;

b. 20 square feet heating surface (not applicable to electric boilers);

c. 5 cubic feet gross volume exclusive of casing and insulation;

d. 100 psig maximum allowable working pressure.

6. *Steam Heating Boiler*—a steam boiler for operation at pressures not exceeding 15 psig, used for heating purposes.

7. *Hot Water Heating Boiler*—a boiler in which no steam is generated, from which hot water is circulated for heating purposes and then returned to the boiler, and which operates at a pressure not exceeding 160 psig and/or a temperature of 250° F at or near the boiler outlet.

8. *Hot Water Supply Boiler*—a boiler completely filled with water that furnishes hot water to be used externally to itself at pressures not exceeding 160 psig or a temperature not exceeding 250° F at or near the boiler outlet.

9. *Potable Water Boiler*—a vessel in which water is heated and withdrawn for use external to itself at pressures not exceeding 160 psig and temperatures not exceeding 210° F. This shall include hot water heaters (fired and electric), supplying potable hot water, 50 gallons and over in capacity; coil water heaters and fired jacketed kettles.

10. *Portable Boiler*—a boiler which is primarily intended for temporary location and the construction and usage permits it to be readily moved from one location to another.

11. *Heat Recovery Boiler*—a vessel or system of vessels comprised of one or more heat exchanger surfaces used for the recovery of waste heat (Vessels known as evaporators or heat exchangers and vessels in which steam and other vapor is generated by the use of heat resulting from the operation of a processing system containing a number of pressure vessels such as used in the manufacture of chemical and petroleum products, are to be exempted from jurisdictional inspection requirements).

12. *Unfired Steam Boiler*—an unfired vessel intended for operation at a pressure in excess of 15 psig steam for the purpose of producing and controlling an output of thermal energy. (Vessels known as evaporators or heat exchangers and vessels in which steam and other vapor is generated by the use of heat resulting from the operation of a processing system containing a number of pressure vessels such as used in the manufacture of chemical and petroleum products, are to be exempted from jurisdictional inspection requirements).

13. *Waste Heat Boiler*—an unfired vessel or system of unfired vessels intended for operation in excess of 15 psig steam for the purpose of producing and controlling an output of thermal energy. (Vessels known as evaporators or heat exchangers and vessels in which steam and other vapor is generated by the use of heat resulting from the operation of a processing system containing a number of pressure vessels such as used in the manufacture of chemical and petroleum products, are exempted from jurisdictional inspection requirements.)

Certificate Inspection—an inspection, the report of which is used by the chief inspector as justification for issuing, withholding or revoking the inspection certificate. This certificate inspection shall be an internal inspection when required; otherwise, it shall be as complete an inspection as possible.

1. *Internal Inspection*—as complete an examination as can be made of the internal and external surface of a boiler or pressure vessel while it is shut down and manhole plates, hand hole plates or other inspection opening closures are removed as required by the inspector.

2. *External Inspection*—an inspection made when a boiler or pressure vessel is in operation, if possible.

Certificate of Competency—a certificate issued to a person who has passed the examination prescribed by the assistant secretary.

Certificate of Inspection—a certificate issued by the chief inspector for the operation of a boiler or pressure vessel as required by the Act.

Commission-National Board—the commission issued by the National Board of Boiler and Pressure Vessel Inspectors to a holder of a certificate of competency who desires to make shop inspections or field inspections in accordance with the National Board Bylaws and whose employer submits the inspector application to the national board for such commission.

Condemned Boiler or Pressure Vessel—a boiler or pressure vessel that has been inspected and declared unsafe, or disqualified by legal requirements, by an inspector and a stamping or marking designating its condemnation has been applied by the chief inspector, deputy or special inspector.

Existing Installation—includes any boiler constructed, installed, placed in operation, or contracted for before July 7, 1938 and any pressure vessel (when required by the Act) before July 16, 1975.

Inspector—the chief inspector, any deputy inspector or special inspector.

1. *Chief Inspector*—the chief boiler and pressure vessel inspector, appointed under the Act.

2. *Deputy Inspector*—any inspector, employed by this state and appointed by the assistant secretary under the provisions of the Act.

3. *Special Inspector*—an inspector holding a Certificate of Competency, and who is regularly employed by an insurance company authorized to insure against loss from explosion of boilers or pressure vessels in this state.

Jurisdiction—a state, commonwealth, county or municipality of the United States or a province of Canada, which has adopted one or more sections of the ASME Code, or other codes and standards accepted by the National Board of Boiler and Pressure Vessel Inspectors, and maintains a

duly constituted department, bureau or division for the purpose of enforcement of such Code.

National Board—the National Board of Boiler and Pressure Vessel Inspectors, 1055 Crupper Avenue, Columbus, Ohio 43229, whose membership is composed of the chief inspectors of jurisdictions, who are charged with the enforcement of the provisions of the ASME Code.

National Board Inspection Code—the manual for boiler and Pressure vessel inspectors published by the National Board of Boiler and Pressure Vessel Inspectors, from which copies may be obtained.

New Boiler or Pressure Vessel—includes all boilers constructed, installed, placed in operation or contracted for after July 7, 1938, or pressure vessels (when requested) after July 16, 1975.

Non-Standard Boiler or Pressure Vessel—a boiler or pressure vessel that does not bear the ASME stamp, the API-ASME stamp, or the stamp of any jurisdiction which has adopted a standard of construction equivalent to that required by these rules.

Owner or User—any person, firm or corporation legally responsible for the safe installation, operation and maintenance of any boiler or pressure vessel within this jurisdiction.

Pressure Vessel—a vessel in which the pressure is obtained from an external source, or by the application of heat from an indirect source, or from a direct source other than those boilers defined herein, and shall be those vessels within the scope of Section VIII of the ASME Code.

PSIG—pounds per square inch gauge.

Reinstalled Boiler or Pressure Vessel—a boiler or pressure vessel removed from its original setting and reinstalled at the same location or at a new location without change of ownership.

Repair—the work necessary to restore a boiler or pressure vessel to a safe and satisfactory operating condition, provided there is no deviation from the original design.

Repair/Pressure Relief Valve—the replacement, re-machining or cleaning of any critical part, lapping of seat and disk or any other operation which may affect the flow passage, capacity function or pressure retaining ability of the valve. Disassembly, reassembly and/or adjustments which affect the pressure relief valve function are also considered repair.

Second Hand Boiler or Pressure Vessel—a boiler or pressure vessel that has changed both locations and ownership since its primary use.

Standard Boiler or Pressure Vessel—a boiler or pressure vessel which bears the stamp of the state, the ASME stamp, the API-ASME stamp, both the ASME and National Board stamp, or the stamp of another jurisdiction which has adopted a standard of construction equivalent to that required by this state.

Water Heater—a vessel in which water is heated by combustion of fuel or electricity, for use external to the system at pressures not exceeding 160 psig and shall include all controls and devices necessary to prevent water temperatures from exceeding 210° F as well as storage vessels connected to the water heater (also defined as a potable water boiler).

AUTHORITY NOTE: Promulgated in accordance with R.S. 23:531 and R.S. 51:1424.

HISTORICAL NOTE: Promulgated by the Department of Public Safety, Office of State Fire Marshal, LR 33:1351 (July 2007).

Subchapter B. Administration

§5006. Boilers to Comply with Code Requirements

A. No boiler shall be installed in this state unless it has been constructed, inspected and stamped in conformity with the ASME Code and registered with the National Board except:

1. those exempt by the Act;

2. those existing installations (see §5003.Definitions);

3. those potable water heaters exempted by Part HLW-101, Section IV of the ASME Code, that are required by the Act, to comply with these rules and regulations. (Those heaters must be designed and constructed according to Underwriters Laboratories or other Nationally Recognized Standards, and shall bear their label on the completed unit);

4. those approved as "Louisiana Special."

B. Louisiana Special. If, due to a valid impediment to compliance with the original code of construction, a boiler cannot bear the required construction code and national board stamping, details in the English language and United States customary units of the proposed construction, material specifications and calculations, approved by a registered professional engineer experienced in boiler systems design, shall be submitted to the chief inspector by the owner or user and approval as "Louisiana Special" obtained before construction is started.

C. A boiler having a standard or special stamping of another state that has adopted a standard of construction equivalent to that required for Louisiana, may be accepted by the assistant secretary. The owner/user desiring to install such a boiler shall make application for the installation of same and shall file with the application of a manufacturers data report covering the construction of the boiler in question and a copy of the approval for construction from the state in which the boiler was fabricated.

D. The stamping, ASME, NB, or Standard Label, shall not be concealed by lagging or paint and shall be exposed at all times unless a suitable cover is provided and identifies the stamping as beneath the cover, or a suitable record is kept of the location of the stamping so that it may be readily uncovered.

AUTHORITY NOTE: Promulgated in accordance with R.S. 23:531 and R.S. 51:1424.

HISTORICAL NOTE: Promulgated by the Department of Public Safety, Office of State Fire Marshal, LR 33:1353 (July 2007).

§5007. Inspections

A. Upon completion of installation, all boilers shall be inspected by an inspector commissioned to inspect boilers in this state, and shall be inspected thereafter as follows.

1. Power boilers shall receive an internal certificate inspection annually, with the exception of those covered by R.S. 23:536.A, and may receive an external inspection while under pressure at approximately six months following the internal inspection.

2. High temperature and high pressure water boilers shall receive an external inspection annually, with an internal inspection done every six years based on the date of manufacture.

3. Low Pressure Boilers and Potable Water Boilers shall receive a certificate inspection biennial as follows.

a. Steam heating boilers shall receive an internal inspection every two years where construction permits, otherwise, a thorough external inspection shall be performed.

b. Hot water heating and hot water supply boilers shall receive an external inspection every two years and where construction permits an internal inspection every six years based on the date of manufacture.

c. All potable water boilers/water heaters shall receive an external inspection, including the functions of all controls and devises, at the initial installation; except those located in privately owned residences. Those potable water boilers/water heaters 50 gallons in capacity and larger (including any attached storage vessels) and/or 100,000 BTU/HR heat input, shall be issued a state jurisdiction number and a certificate to operate. Those heaters issued an operating certificate will require an external inspection every two years thereafter.

B. In addition to a certificate inspection being conducted in accordance with R.S. 23:536 in a commercial laundromat, as defined by R.S. 47:305.17 the Deputy State Fire Marshal inspector shall verify that hot water is being supplied to each machine at a minimum temperature of 120° F or a sign shall be placed on the machine indicting that hot water is not available.

C. Upon application from the owner or user with the recommendation of a deputy inspector or special inspector, the chief inspector may authorize an extension of the internal inspection period, as provided for by the Act.

AUTHORITY NOTE: Promulgated in accordance with R.S. 23:531 and R.S. 51:1424.

HISTORICAL NOTE: Promulgated by the Department of Public Safety, Office of State Fire Marshal, LR 33:1353 (July 2007).

§5008. Second-Hand Installations to Comply with New Installation Requirements

A. In any case where a second-hand boiler is installed, that is, both the ownership and location of which is changed, all fittings and appliances must comply with the applicable ASME Code section for new installations.

AUTHORITY NOTE: Promulgated in accordance with R.S. 23:531 and R.S. 51:1424.

HISTORICAL NOTE: Promulgated by the Department of Public Safety, Office of State Fire Marshal, LR 33:1354 (July 2007).

§5009. Application of State Serial Numbers

A. Upon completion of the installation of a boiler, or at the time of the initial certificate inspection of an already installed boiler that has not been inspected and decaled according to these rules. A decal with the state serial number shall be placed in a conspicuous location on the boiler/water heater for identification.

B. Pressure vessels when requested to be inspected by the owner or user shall have securely attached one of the decals provided by the boiler inspection section containing the state serial number, and shall be decaled under the same pressure and temperature guidelines provided for boilers by these rules and regulations.

C. State serial numbers that have been decaled or otherwise attached to a boiler shall not be defaced or removed except as provided for by these rules and regulations, and shall not be covered by insulation or other material.

AUTHORITY NOTE: Promulgated in accordance with R.S. 23:531 and R.S. 51:1424.

HISTORICAL NOTE: Promulgated by the Department of Public Safety, Office of State Fire Marshal, LR 33:1354 (July 2007).

§5010. Examination for an Inspectors Certificate of Competency

A. Examination for an inspectors certificate of competency shall be held at the Office of State Fire Marshal or any other location to be selected by the chief inspector, four times each year, namely the first Wednesday and 1/2 day Thursday in the months of March, June, September and December. An applicant for an examination shall have education and experience equal to at least one of the following:

1. from an accredited school, a degree in engineering plus one year of experience in design, construction, operation or inspection of high-pressure boilers and pressure vessels;

2. an associate degree in mechanical technology plus two years of experience in design, construction, operation or inspection of high-pressure boilers and pressure vessels;

3. a high school education or the equivalent plus three years of experience:

a. in high-pressure boiler and pressure vessel construction or repair; or

b. in charge of high-pressure boiler operation; or

c. in the inspection of high-pressure boilers and pressure vessels.

B. Applications for examination shall be in writing on a form to be furnished by the chief inspector stating the education of the applicant, a list of the applicant's employers, the applicant's period of employment and position held with each employer. Applications containing willful falsifications or untruthful statements shall be cause for rejection. Applications shall be submitted to the chief inspector at least 45 days prior to the date of examination. If the applicants education and experience are acceptable to the chief inspector, the applicant shall be given a written examination prepared by the National Board of Boiler and Pressure Vessel Inspectors or the American Petroleum Institute, as applicable, dealing with the construction, maintenance and repair of boilers and pressure vessels and appurtenances, and the applicant shall be accepted or rejected on the merits of this examination. If the applicant is successful in meeting the requirements, a certificate of competency will be issued by the chief inspector, when the applicant is employed on a full-time basis by an authorized inspection organization (see §5003.Definitions). Upon the expiration of 90 days, an applicant who failed to pass the examination will be permitted to take another written examination and applicant's acceptance or rejection will be determined on the basis of this examination.

C. An NDE Level II examiner of ASME code boilers and pressure vessels may be credited one year towards the experience requirements above provided the applicant has five years of documented experience in that position and meets all other requirements.

D. A quality control inspector of ASME code boilers and pressure vessels, applying under Subsection C above, may be credited with four months of experience under the experience requirements of such section for each year of documented, diversified experience he/she possesses in the implementation of an ASME accepted written quality control/assurance system, up to a maximum of 24 months of such credit, provided that the applicant meets all other applicable requirements and provided that he/she has the balance of experience required under Paragraph 3 above in actual work described in Subparagraps a, b, or c.

AUTHORITY NOTE: Promulgated in accordance with R.S. 23:531 and R.S. 51:1424.

HISTORICAL NOTE: Promulgated by the Department of Public Safety, Office of State Fire Marshal, LR 33:1354 (July 2007).

§5011. Examination Fees

A. A fee of $50 will be charged for each applicant taking the examination for a certificate of competency.

AUTHORITY NOTE: Promulgated in accordance with R.S. 23:531 and R.S. 51:1424.

HISTORICAL NOTE: Promulgated by the Department of Public Safety, Office of State Fire Marshal, LR 33:1355 (July 2007).

§5012. Certificate of Competency and Identification Card

A. Upon request of an employer, a certificate of competency and an identification card may be issued by the chief inspector to:

1. an inspector employed by the jurisdiction;

2. an inspector who is employed full-time by an insurance company which is authorized to insure and does insure against loss from explosions of boilers and pressure vessels in this jurisdiction;

3. an inspector employed as described in either Paragraph 1 or 2 above who conducts shop or field inspections of new boilers, pressure vessels, or nuclear components in accordance with the applicable ASME code requirements.

B. The request for the certificate of competency and identification card shall be completed on forms to be provided by the chief inspector and shall be accompanied by, when applicable, a facsimile of the applicant's commission and commission card, certificate of competency and identification card as named above, and a fee of $40.

C. The certificate of competency and valid identification card shall be returned to the chief inspector when the inspector to whom they were issued is no longer employed by the organization employing that inspector at the time that the certificate was issued. Each person holding a valid certificate of competency and who conducts inspections as provided by the Act shall apply to the chief inspector on forms provided and obtain a renewal identification card annually, not later than March 31 of each year. A fee of $20 for each card shall accompany each applicant.

D. An inspectors certificate of competency may be suspended by the chief inspector after due investigation for neglect of duty, in competency, untrustworthiness or conflict of interest of the holder thereof, or for willful falsification of any matter or statement contained in his/her application, or in a report of any inspection made by him/her. Written notice of any such suspension shall be given to the inspector and his/her employer by the chief inspector within not more than 10 days after the effective date of such suspension. Persons whose certificates of competency have been suspended shall be entitled to an appeal to the assistant secretary and to be present in person and represented by counsel at the hearing of the appeal.

AUTHORITY NOTE: Promulgated in accordance with R.S. 23:531 and R.S. 51:1424.

HISTORICAL NOTE: Promulgated by the Department of Public Safety, Office of State Fire Marshal, LR 33:1355 (July 2007).

§5013. Conflict of Interest

A. An inspector shall not engage in the sale of any services, article or device relating to boilers, pressure vessels, or their appurtenances.

AUTHORITY NOTE: Promulgated in accordance with R.S. 23:531 and R.S. 51:1424.

HISTORICAL NOTE: Promulgated by the Department of Public Safety, Office of State Fire Marshal, LR 33:1355 (July 2007).

§5014. Inspection Reports to be submitted by Inspectors

A. Reports shall be submitted on approved forms or format within 30 days from the date of the inspection. The copy of the report filed with the assistant secretary shall be filled out in ink or type-written, and shall be signed by the inspector.

B. External inspection reports are required when they are used to support a request for an extension of internal inspection, when the design of a vessel does not provide for an internal inspection an annual external certificate inspection shall be completed, and to report unsafe conditions or code violations which would affect the safety of the boiler.

AUTHORITY NOTE: Promulgated in accordance with R.S. 23:531 and R.S. 51:1424.

HISTORICAL NOTE: Promulgated by the Department of Public Safety, Office of State Fire Marshal, LR 33:1355 (July 2007).

§5015. Insurance Companies to Notify Chief Inspector of New, Canceled or Suspended Insurance on Boilers, Pressure Vessels, or Nuclear Systems

A. All insurance companies shall notify the chief inspector, within 30 days, of all boilers, pressure vessels, or nuclear systems, on which insurance is written, canceled, not renewed or suspended because of unsafe conditions.

AUTHORITY NOTE: Promulgated in accordance with R.S. 23:531 and R.S. 51:1424.

HISTORICAL NOTE: Promulgated by the Department of Public Safety, Office of State Fire Marshal, LR 33:1355 (July 2007).

§5016. Special Inspectors to Notify Chief Inspector of Unsafe Boilers

A. If a special inspector, upon first inspection of a new risk, finds that a boiler or any appurtenance thereof, is in such condition that the special inspectors company would refuse insurance, the company shall immediately notify the chief inspector and submit a report on the defects. if, upon inspection, a special inspector finds a boiler to be unsafe for further operation, the special inspector shall promptly notify the owner or user, stating what repairs or other corrective measures is required to bring the object into compliance with these rules and regulations. If the owner or user fails to make such repairs or adopt such other corrective measures promptly, the special inspector shall immediately notify the chief inspector. Until such corrections have been made, no further operation of the boiler involved shall be permitted. If an inspection certificate for the object is required and is in force, it shall be suspended by the chief inspector. When reinspection establishes that the necessary repairs have been made or corrective actions have been taken and that the boiler is safe to operate, the chief Inspector shall be notified. At that time an inspection certificate, where applicable will be issued.

AUTHORITY NOTE: Promulgated in accordance with R.S. 23:531 and R.S. 51:1424.

HISTORICAL NOTE: Promulgated by the Department of Public Safety, Office of State Fire Marshal, LR 33:1355 (July 2007).

§5017. Defective Conditions Disclosed at Time of External Inspection

A. If, upon an external inspection, there is evidence of a leak or crack, sufficient covering of the boiler shall be removed to permit the inspector to satisfactorily determine the safety of the boiler. If the covering cannot be removed at that time, he/she may order the operation of the boiler stopped until such time as the covering can be removed and proper examination made.

AUTHORITY NOTE: Promulgated in accordance with R.S. 23:531 and R.S. 51:1424.

HISTORICAL NOTE: Promulgated by the Department of Public Safety, Office of State Fire Marshal, LR 33:1356 (July 2007).

Subchapter C. Existing Installations—Power Boilers

§5020. Age Limits of Existing Boilers

A. The age limit of any boiler of nonstandard construction, installed prior to the date the Act became effective, shall be 30 years except that, a boiler having other than a lap-riveted longitudinal joint, after a thorough internal and external inspection, and when required by the inspector, a hydrostatic test of 1-1/2 times the allowable working pressure held for a period of at least 30 minutes during which no distress or leakage develops, may be continued in operation at the working pressure determined by calculation. The age limit on any non-standard boiler having lap-riveted longitudinal joins and operating at a pressure in excess of 50 psig shall be 20 years. This type of boiler, when removed from an existing setting shall not be reinstalled for a pressure in excess of 15 psig. A reasonable time for replacement, not to exceed one year, may be given at the discretion of the assistant secretary.

B. The age limit of boilers of standard construction installed prior to the date this law, Title 23, Chapter 5, Page III, of the Louisiana Revised Statutes of 1950, became effective shall be dependent on thorough internal and external inspection and where required by the inspector, a hydrostatic pressure test not exceeding one and 1/2 times the allowable working pressure, if the boiler, under these test conditions, exhibits no distress or leakage, it may be continued in operation at the working pressure determined by calculation.

C. The shell or drum of a boiler in which a lap seam crack develops along a longitudinal lap-riveted joint shall be condemned. A lap seam crack is a crack found in lap seams extending parallel to the longitudinal joint and located either between or adjacent to rivet holes.

AUTHORITY NOTE: Promulgated in accordance with R.S. 23:531 and R.S. 51:1424.
HISTORICAL NOTE: Promulgated by the Department of Public Safety, Office of State Fire Marshal, LR 33:1356 (July 2007).

§5021. Maximum Allowable Working Pressure for Standard Boilers

A. The maximum allowable working pressure for standard boilers shall be determined in accordance with the applicable provisions of the edition of the ASME Code under which they were constructed and stamped.

AUTHORITY NOTE: Promulgated in accordance with R.S. 23:531 and R.S. 51:1424.
HISTORICAL NOTE: Promulgated by the Department of Public Safety, Office of State Fire Marshal, LR 33:1356 (July 2007).

§5022. Maximum Allowable Working Pressure for Nonstandard Boilers

A. The maximum allowable working pressure for boilers fabricated by riveting shall be determined by the applicable rules of the 1971 Edition of Section I of the ASME Code.

B. The lowest factor of safety permissible on existing installations shall be 5, except for horizontal-return-tubular boilers having continuous longitudinal lap seams more than 12 feet in length, the factor of safety shall be 8. When this latter type of boiler is removed from its existing setting, it shall not be reinstalled for pressure in excess of 15 psig.

C. The maximum allowable working pressure for boilers of welded construction in service may not exceed that allowable in Section I of the ASME Code for new boilers of the same construction.

D. The maximum allowable working pressure on the shell of a boiler or drum shall be determined by the strength of the weakest course computed from the thickness of the plate, the tensile strength of the plate, the efficiency of the longitudinal joint, the inside diameter of the course, and the factor of safety allowed by these rules and regulations in accordance with the following formula.

TStE = maximum allowable working pressure, psig
RFS

where:

TS = specified minimum tensile strength of shell plate material, psi. When the tensile strength of steel or wrought-iron shell plate is not known, it shall be taken as 55,000 psi for steel and 45,000 psi for wrought iron.

t = minimum thickness of shell plate, in weakest course, inches.

E = efficiency of longitudinal joint, method of determining which is given in Paragraph PG-27 of Section I of the ASME Code.

R = inside radius of the weakest course of the shell of drum, inches.

FS = factor of safety which shall be at least 5.

E. The inspector may increase the factor of safety, if the condition and safety of the boiler warrant it.

AUTHORITY NOTE: Promulgated in accordance with R.S. 23:531 and R.S. 51:1424.
HISTORICAL NOTE: Promulgated by the Department of Public Safety, Office of State Fire Marshal, LR 33:1356 (July 2007).

§5023. Cast-Iron Headers and Mud Drums

A. The maximum allowable working pressure on a water tube boiler, the tubes of which are secured to cast-iron or malleable-iron headers or which have cast-iron mud drums, shall not exceed 160 psig.

AUTHORITY NOTE: Promulgated in accordance with R.S. 23:531 and R.S. 51:1424.
HISTORICAL NOTE: Promulgated by the Department of Public Safety, Office of State Fire Marshal, LR 33:1357 (July 2007).

§5024. Pressure on Cast-Iron Boilers

A. The maximum allowable working pressure for any cast-iron boiler, except hot water boilers, shall be 15 psig.

AUTHORITY NOTE: Promulgated in accordance with R.S. 23:531 and R.S. 51:1424.
HISTORICAL NOTE: Promulgated by the Department of Public Safety, Office of State Fire Marshal, LR 33:1357 (July 2007).

§5025. Safety Valves

A. The use of weighted-lever safety valves or safety valves having either the seat or disk of cast-iron are prohibited; valves of this type of construction shall be replaced by direct, spring-loaded, pop-type valves that conform to the requirements of ASME Code, Section I.

B. Each boiler shall have at least one ASME/NB stamped and certified safety valve, and if it has more than 500 square feet of water-heating surface, or an electric power input of more than 1100 KW, it shall have two or more safety valves of the same type.

C. The valve or valves shall be connected to the boiler, independent of any other steam connection and attached as close as possible to the boiler without unnecessary intervening pipe or fittings. Where alteration is required to conform to this requirement, owner or user shall be allowed reasonable time in which to complete the work as permitted by the chief inspector.

D. No valves of any description shall be placed between the safety valve and the boiler nor on the escape pipe, if used. When an escape pipe is used, it shall be at least the full size of the safety valve discharge and fitted with an open drain to prevent water lodging in the upper part of the safety valve or in the escape pipe. When an elbow is placed on a

safety valve escape pipe, it shall be located close to the safety valve outlet or the escape pipe shall be anchored and supported securely. All safety discharges shall be so located or piped as to be carried clear from walkways or platforms.

E. The safety valve capacity of each boiler shall be such that the safety valve or valves will discharge all the steam that can be generated by the boiler without allowing the pressure to rise more than 6 percent above the highest pressure to which any valve is set, and in no case to more than 6 percent above the maximum allowable working pressure.

F. One or more safety valves on every boiler shall be set at or below the maximum allowable working pressure. The remaining valves may be set within a range of 3 percent above the maximum allowable working pressure, but the range of setting of all the safety valves on a boiler shall not exceed 10 percent of the highest pressure to which any valve is set.

G. When boilers of different maximum allowable working pressures with minimum safety valve settings varying more than 6 percent are so connected that steam can flow toward the lower pressure units, the latter shall be protected by additional safety valve capacity, if necessary, on the lower pressure side of the system. The additional safety valve capacity shall be based upon the maximum amount of steam which can flow into the lower pressure system.

H. In those cases where the boiler is supplied with feed water directly from water mains without the use of feeding apparatus (not to include return traps), no safety valve shall be set at a pressure greater than 94 percent of the lowest pressure obtained in the supply main feeding the boiler.

I. The relieving capacity of the safety valves on any boiler shall be done by one of the three following methods and, if found to be insufficient, additional valves shall be provided:

1. by making an accumulation test, which consists of shutting off all other steam discharge outlets from the boiler and forcing the fires to the maximum. The safety valve capacity shall be sufficient to prevent a rise of pressure in excess of 6 percent of the maximum allow-able working pressure. This method should not be used on a boiler with a super heater or reheater;

2. by measuring the maximum amount of fuel that can be burned and computing the corresponding evaporative capacity (steam generating capacity) upon the basis of the heating value of this fuel. These computations shall be made as outlined in the Appendix of the ASME Code, Section I;

3. by measuring the maximum amount of feed water that can be evaporated. When either of the methods outlined in two or three is employed, the sum of the safety valve capacities shall be equal to or greater than the maximum evaporative capacity (maximum steam generating capacity) of the boiler.

J. Repairs to safety and safety-relief valves shall be conducted only by holders of the National Board VR Certificate of Authorization, or by owner/users that have obtained the state certificate of authorization to repair safety and safety-relief valves.

AUTHORITY NOTE: Promulgated in accordance with R.S. 23:531 and R.S. 51:1424.

HISTORICAL NOTE: Promulgated by the Department of Public Safety, Office of State Fire Marshal, LR 33:1357 (July 2007).

§5026. Boiler Feeding

A. Each boiler shall have a feed supply which will permit it to be fed at any time while under pressure.

B. A boiler having more than 500 square feet of water heating surface shall have at least two suitable means of feeding, at least one of which shall be a feed pump. A source of feed at a pressure 6 percent greater than the set pressure of the safety valve with the highest setting maybe considered one of the means. Boilers fired by gaseous, liquid, or solid fuel in suspension may be equipped with a single means of feeding water provided means are furnished for the shutoff of heat input prior to the water level reaching the lowest safe level.

C. The feed water shall be introduced into a boiler in such a manner that the water will not be discharged directly against surfaces exposed to gases of high temperature to direct radiation from the fire. For pressures of 400 psig over, the feed water inlet through the drum shall be fitted with shields, sleeves, or other suitable means to reduce the effects of temperature differentials in the shell or head.

D. The feed piping to the boiler shall be provided with a check valve near the boiler and a valve or cock between the check valve and the boiler. When two or more boilers are fed from a common source, there shall also be a valve on the branch to each boiler between the check valve and the source of supply. Whenever a globe valve is used on feed piping, the inlet shall be under the disk of the valve.

E. In all cases where returns are fed back to the boiler by gravity, there shall be a check valve and stop valve in each return line, the stop valve to be place between the boiler and the check valve, and both shall be located as close to the boiler as practicable. It is recommended that no stop valves be placed in the supply and return pipe connections of a single boiler installation.

F. Where deaerating heaters are not employed, it is recommended that the temperature of the feed water be not less than 120° F to avoid the possibility of setting up localized stress. Where deaerating heaters are employed, it is recommended that the minimum feed water temperature be not less than 215° F so that dissolved gases may be thoroughly released.

AUTHORITY NOTE: Promulgated in accordance with R.S. 23:531 and R.S. 51:1424.

HISTORICAL NOTE: Promulgated by the Department of Public Safety, Office of State Fire Marshal, LR 33:1357 (July 2007).

§5027. Water Level Indicators

A. Each boiler, except forced-flow steam generators with no fixed steam and waterline, and high-temperature water boiler of the forced circulation type that have no steam and waterline, shall have at least one water gage glass. Boilers operated at pressures over 400 psig shall be provided with two water gage glasses which may be connected to a single water column or connected directly to the drum.

B. Two independent remote level indicators may be provided instead of one of the two required gage glasses for boiler drum water level indication in the case of power boilers with all drum safety valves set at or above 400 psig. When both remote level indicators are in reliable operation, the remaining gage glass may be shut off, but shall be maintained in serviceable condition.

C. When the direct reading of gage glass water level is not readily visible to the operator in his/her working area, two dependable indirect indications shall be provided, either by transmission of the gage glass image or by remote level indicators.

D. The lowest visible part of the water gage glass shall be at least two inches above the lowest permissible water level, at which level there will be no danger of overheating any part of the boiler when in operation at that level. When remote level indication is provided for the operator in lieu of the gage glass, the same minimum level reference shall be clearly marked.

E. Connections from the boiler to the remote level indicator shall be at least 3/4 inch pipe size to and including the isolation valve and from there to the remote level indicator at least 1/2 inch O.D. tubing. These connections shall be completely independent of other connections for any function other than water level indication. For pressures of 400 psig or over, lower connections to drums shall be provided with shields, sleeves, or other suitable means to reduce temperature differentials in the shells or heads.

F. Boilers of the horizontal fire tube types shall be so set that when the water is at the lowest reading in the water gage glass there shall be at least 3 inches of water over the highest point of the tubes, flues, or crown sheets.

G. Boilers of locomotives shall have at least one water glass provided with top and bottom shutoff cocks and lamp, and two gage cocks for boilers 36 inches in diameter and under, and three gage cocks for boilers over 36 inches in diameter.

H. The lowest gage cock and the lowest reading of water glass shall not be less that 2 inches above the highest point of crown sheet on boilers 36 inches in diameter and under, nor less than 3 inches for boilers over 36 inches in diameter. These are minimum dimensions, and on larger locomotives and those operating on steep grades, the height should be increased, if necessary, to compensate for change of water level on descending grades.

I. The bottom mounting for water glass and for water column if used must extend not less than 1 1/2 inches inside the boiler and beyond any obstacle immediately above it, and the passage therein must be straight and horizontal.

J. Tubular water glasses must be equipped with a protecting shield.

K. All connections on the gage glass shall be not less than 1/2 inch pipe size. Each water gage glass shall be fitted with a drain cock or valve having an unrestricted drain opening of not less than 1/4 inch diameter to facilitate cleaning. When the boiler operating pressure exceeds 100 psig the glass shall be furnished with a connection to install a valved drain to the ash pit or other safe discharge point.

L. Each water gage glass shall be equipped with a top and bottom shutoff valve of such through-flow construction as to prevent stoppage by deposits of sediments. If the lowest valve is more than 7 feet above the floor or platform from which it is operated, the operating mechanism shall indicate by its position whether the valve is open or closed. The pressure-temperature rating shall be at least equal to that if the lowest set pressure of any safety valve on the boiler drum and the corresponding saturated-steam temperature.

M. Straight-run globe valves shall not be used on such connections.

N. Automatic shutoff valves, if permitted to be used, shall conform to the requirements of Section I of the ASME Code.

AUTHORITY NOTE: Promulgated in accordance with R.S. 23:531 and R.S. 51:1424.

HISTORICAL NOTE: Promulgated by the Department of Public Safety, Office of State Fire Marshal, LR 33:1358 (July 2007).

§5028. Water Columns

A. The water column shall be so mounted that it will maintain its correct position relative to the normal waterline under operating conditions.

B. The minimum size of pipes connecting the water column to a boiler shall be 1 inch. For pressures of 400 psig or over, lower water column connections to drums shall be provided with shields, sleeves or other suitable means to reduce the effect of temperature differentials in the shells or heads. Water glass fittings or gage cocks may be connected directly to the boiler.

C. The steam and water connections to a water column or a water gage glass shall be such that they are readily accessible for internal inspection and cleaning. Some acceptable methods of meeting this requirement are by providing a cross or fitting with a back outlet at each right-angle turn to permit inspection and cleaning in both directions, or by using pipe bends or fittings of a type which does not leave an internal shoulder or pocket in the pipe connection and with a radius of curvature which will permit the passage of a rotary cleaner. Screwed plug closures using threaded connections as allowed by Section I of the ASME Code are acceptable means of access for this inspection and cleaning. For boilers with all drum safety valves set at or

above 400 psig, socket-welded plugs may be used for this purpose in lieu of screwed plugs. The water column shall be fitted with a connection for a drain cock or drain valve to install a pipe of at least 3/4 inch pipe size to the ash pit or other safe point of discharge. If the water connection to the water column has a rising bend or pocket which cannot be drained by means of the water column drain, an additional drain shall be placed on this connection in order that it may be blown off to clear any sediment from the pipe.

D. The design and material of a water column shall comply with the requirements of Section I of the ASME Code. Water columns made of cast-iron in accordance with SA-278 may be used for maximum boiler pressures not exceeding 250 psig. Water columns made of ductile iron in accordance with SA-395 may be used for maximum boiler pressures not exceeding 350 psig. For higher pressures, steel construction shall be used.

E. Shutoff valves shall not be used in the pipe connections between a boiler and a water column or between a boiler and the shutoff valves required for the gage glass, unless they are either outside-screw-and-yoke or lever-lifting type gate valves or stopcocks with lever permanently fastened thereto and marked in line with their passage, or of such other through-flow construction as to prevent stoppage by deposits of sediment, and to indicate by the position of the operating mechanisms whether they are in open or closed position; and such valves or cocks shall be locked or sealed open. Where stopcocks are used, they shall be of a type with the plug held in place by a guard or gland.

F. No outlet connections, except for control devices (such as damper regulators and feed water regulators), drains, steam gages, or apparatus of such form as does not permit the escape of an appreciable amount of steam or water there from shall be placed on the pipes connecting a water column or gage glass to a boiler.

AUTHORITY NOTE: Promulgated in accordance with R.S. 23:531 and R.S. 51:1424.

HISTORICAL NOTE: Promulgated by the Department of Public Safety, Office of State Fire Marshal, LR 33:1358 (July 2007).

§5029. Gage Glass Connections

A. Gage glasses and/or gage cocks that are not connected directly to a shell or drum of the boiler shall be connected by one or the following methods.

1. The water gage glass or glasses and gage cocks shall be connected to an intervening water column.

2. When only water gage glasses are used, they may be mounted away from the shell or drum and the water column omitted, provided the following requirements are met:

a. the top and bottom gage glass fittings are aligned, supported, and secured so as to maintain the alignment of the gage glass; and

b. the steam and water connections are not less than 1 inch pipe size and each water glass is provided with a valved drain; and

c. the steam and water connections comply with the requirements of the following:

i. the lower edge of the steam connection to a water column or gage glass in the boiler shall not be below the highest visible water level in the water gage glass. There shall be no sag or offset in the piping which will permit the accumulation of water; and

ii. the upper edge of the water connection to a water column or gage glass and the boiler shall not be above the lowest visible water level in the gage glass. No part of this pipe connection shall be above the point of connection at the water column.

B. Each boiler (except those not requiring water level indicators) shall have three or more gage cocks located within the visible length of the water glass, except when the boiler has two water glasses located on the same horizontal lines.

C. Boilers not over 36 inches in diameter in which the heating surface does not exceed 100 square feet need have but two gage cocks.

D. The gage cock connections shall be not less than 1/2 inch pipe size.

AUTHORITY NOTE: Promulgated in accordance with R.S. 23:531 and R.S. 51:1424.

HISTORICAL NOTE: Promulgated by the Department of Public Safety, Office of State Fire Marshal, LR 33:1359 (July 2007).

§5030. Pressure Gages

A. Each boiler shall have a pressure gage so located that it is easily readable. The pressure gage shall be installed so that it shall at all times indicate the pressure in the boiler. Each steam boiler shall have the pressure gage connected to the steam space or to the water column or its steam connection a valve or cock may be located near the boiler providing it is locked or sealed in the open position. No other shutoff valves shall be located between the gage and the boiler. The pipe connection shall be of ample size and arranged so that it maybe cleared by blowing out. For a steam boiler the gage or connection shall contain a siphon or equivalent device which will develop and maintain a water seal that will prevent steam from entering the gage tube. Pressure gage connections shall be suitable for the maximum allowable working pressure and temperature but, if the temperature exceeds 406° F, brass or copper pipe or tubing shall not be used. The connections to the boiler, except the siphon if used, shall not be less than 1/4 inch inside the diameter standard pipe size but where steel or wrought iron pipe or tubing is used they shall not be less than 1/2 inch. The minimum size of a siphon, if used, shall be 1/4 inch inside diameter. The dial of the pressure gage shall be graduated to approximately double the pressure at which the safety valve is set, but in no case to less than 1 1/2 times this pressure.

B. Each force-flow steam generator with no fixed steam and water line shall be equipped with pressure gages or other pressure measuring devices located as follows:

1. at the boiler or super heater outlet (following the last section which involves absorption of heat); and

2. at the boiler or economizer inlet (preceding any section which involves absorption of heat); and

3. upstream of any shutoff valve which may be used between any two sections of the heat absorbing surface.

C. Each high-temperature water boiler shall have a temperature gage so located and connected that it shall be easily readable. The temperature gage shall be installed so that it at all times indicates the temperature in degrees Fahrenheit of the water in the boiler, at or near the outlet connection.

AUTHORITY NOTE: Promulgated in accordance with R.S. 23:531 and R.S. 51:1424.

HISTORICAL NOTE: Promulgated by the Department of Public Safety, Office of State Fire Marshal, LR 33:1359 (July 2007).

§5031. Stop Valves

A. Each steam outlet from a boiler (except safety valve and water column connections) shall be fitted with a stop valve located as close as practicable to the boiler.

B. When a stop valve is so located that water can accumulate, ample drains shall be provided. The drainage shall be piped to a safe location and shall not be discharged on the top of the boiler or its settings.

C. When boilers provided with manholes are connected to a common steam main, the steam piping connected from each boiler shall be fitted with two stop valves having an ample free blow drain between them. The discharge of the drain shall be visible to the operator while manipulating the valves and shall be piped clear of the boiler setting. The stop valves shall consist preferably of one automatic non-return valve (set next to the boiler) and a second valve of the outside-screw-and-yoke type.

AUTHORITY NOTE: Promulgated in accordance with R.S. 23:531 and R.S. 51:1424.

HISTORICAL NOTE: Promulgated by the Department of Public Safety, Office of State Fire Marshal, LR 33:1360 (July 2007).

§5032. Blow Off Piping

A. A blow off as required herein is defined as a pipe connection provided with valves located in the external piping through which the water in the boiler may be blown out under pressure, excepting drains such as are used on water columns, gage glasses, or piping to feed water regulators, etc., used for the purpose of determining the operating conditions of such equipment. Piping connections used primarily for continuous operation, such as deconcentrators or continuous blow down systems, are not classed as blow offs but the pipe connections and all fittings up to and including the first shutoff valve shall be equal at least to the pressure requirements for the lowest set pressure of any safety valve on the boiler drum and with the corresponding saturated-steam temperature.

B. A surface blow off shall not exceed 2 1/2 inch pipe size, and the internal pipe and the terminal connection for the external pipe, when used, shall form a continuous passage, but with clearance between their ends and arranged so that the removal of either will not disturb the other. A properly designed steel bushing, similar to or the equivalent of those shown in Fig. PG-59.1 of Section I of the ASME Code or a flanged connection shall be used.

C. Each boiler except forced-flow steam generators with no fixed steam and waterline and high-temperature water boilers shall have a bottom blow off outlet in direct connection with the lowest water space practicable for external piping conforming to PG-58.3.6 of Section I of the ASME Code.

D. All water walls and water screens which do not drain back into the boiler and all integral economizers, shall be equipped with outlet connections for a blow off or drain line and conform to the requirements of PG-58.3.6 or PG-58.3.7 of the ASME Code.

E. Except as permitted for miniature boilers, the minimum size of piping and fittings shall be 1 inch, and the maximum size shall be 2-1/2 inches, except that for boilers with 100 sq. ft. of heating surface or less, the minimum size of pipe and fittings may be 3/4 inch.

F. Condensate return connections of the same size or larger than the size herein specified may be used, and the blow off may be connected to them. In such case, the blow off shall be so located that the connection may be completely drained.

G. A bottom blow off pipe when exposed to direct furnace heat shall be protected by firebrick or other heat resisting material which is so arranged that the pipe may be inspected.

H. An opening in the boiler setting for a blow off pipe shall be arranged to provide free expansion and contraction.

AUTHORITY NOTE: Promulgated in accordance with R.S. 23:531 and R.S. 51:1424.

HISTORICAL NOTE: Promulgated by the Department of Public Safety, Office of State Fire Marshal, LR 33:1360 (July 2007).

§5033. Repairs and Renewals of Boiler Fittings and Appliances

A. Whenever repairs are made to fittings or appliances or it becomes necessary to replace them, the work shall comply with the requirements for new installations.

AUTHORITY NOTE: Promulgated in accordance with R.S. 23:531 and R.S. 51:1424.

HISTORICAL NOTE: Promulgated by the Department of Public Safety, Office of State Fire Marshal, LR 33:1360 (July 2007).

§5034. Repairs and Alterations to Boilers and Pressure Vessels

A. Repairs and alterations to boilers and pressure vessels shall be made, in accordance with the currently adopted version of the National Board Inspection Code (NBIC), only by, or on behalf of, an owner/user, a repair organization, or an individual having a valid certificate of authorization for use of the R Symbol stamp issued by the National Board of Boiler and Pressure Vessel Inspectors.

AUTHORITY NOTE: Promulgated in accordance with R.S. 23:531 and R.S. 51:1424.

HISTORICAL NOTE: Promulgated by the Department of Public Safety, Office of State Fire Marshal, LR 33:1360 (July 2007).

§5035. Conditions Not Covered by these Requirements

A. All cases not specifically covered by these requirements shall be treated as new installations or may be referred to the chief inspector for instructions concerning the requirements.

AUTHORITY NOTE: Promulgated in accordance with R.S. 23:531 and R.S. 51:1424.

HISTORICAL NOTE: Promulgated by the Department of Public Safety, Office of State Fire Marshal, LR 33:1360 (July 2007).

§5036. Standard Boilers

A. The maximum allowable working pressure of standard boilers shall in no case exceed the pressure indicated by the manufacturers identification stamped or cast on the boiler or on a plate secured to it.

AUTHORITY NOTE: Promulgated in accordance with R.S. 23:531 and R.S. 51:1424.

HISTORICAL NOTE: Promulgated by the Department of Public Safety, Office of State Fire Marshal, LR 33:1361 (July 2007).

§5037. Nonstandard Riveted Boilers

A. The maximum allowable working pressure on the shell of a nonstandard riveted heating boiler shall be determined in accordance with applicable rules of the 1971 Edition of Section I of the ASME code. Power boilers, except that in no case shall the maximum allowable working pressure of a steam heating boiler exceed 15 psig, or a hot water boiler exceed 160 psig or 250° F temperatures.

AUTHORITY NOTE: Promulgated in accordance with R.S. 23:531 and R.S. 51:1424.

HISTORICAL NOTE: Promulgated by the Department of Public Safety, Office of State Fire Marshal, LR 33:1361 (July 2007).

§5038. Nonstandard Welded Boilers

A. The maximum allowable working pressure of a nonstandard steel or wrought iron heating boiler of welded construction shall not exceed 15 psig for steam. For other than steam service, the maximum allowable working pressure shall be calculated in accordance with Section IV of the ASME Code, but in no case shall it exceed 30 psig.

AUTHORITY NOTE: Promulgated in accordance with R.S. 23:531 and R.S. 51:1424.

HISTORICAL NOTE: Promulgated by the Department of Public Safety, Office of State Fire Marshal, LR 33:1361 (July 2007).

§5039. Nonstandard Cast Iron Boilers

A. The maximum allowable working pressure of a nonstandard boiler composed principally of cast iron shall not exceed 15 psig for steam service or 30 psig for hot water service.

B. The maximum allowable working pressure of a nonstandard boiler having cast iron shell or heads and steel or wrought iron tubes shall not exceed 15 psig for steam service or 30 psig for hot water service.

AUTHORITY NOTE: Promulgated in accordance with R.S. 23:531 and R.S. 51:1424.

HISTORICAL NOTE: Promulgated by the Department of Public Safety, Office of State Fire Marshal, LR 33:1361 (July 2007).

§5040. Potable Water Heaters

A. A potable water heater shall not be installed or used at pressures exceeding 160 psig or water temperatures exceeding 210° F. Water heaters may be used to simultaneously provide potable hot water and space heat in combination, except in places of public assembly.

AUTHORITY NOTE: Promulgated in accordance with R.S. 23:531 and R.S. 51:1424.

HISTORICAL NOTE: Promulgated by the Department of Public Safety, Office of State Fire Marshal, LR 33:1361 (July 2007).

§5041. Safety Valves

A. Each steam boiler shall have one or more ASME/National Board stamped and certified safety valves of the spring pop-type adjusted and sealed to discharge at a pressure not to exceed 15 psig. Seals shall be attached in a manner to prevent the valve from being taken apart without breaking the seal. The safety valves shall be arranged so that they cannot be reset to relieve at a higher pressure than the maximum allowable working pressure on the boiler. A body drain connection below seat level shall be provided by the manufacturer and this drain shall not be plugged during or after field inspection. For valves exceeding 2 inches pipe size, the drain hole or holes shall be tapped not less than 3/8 inch pipe size. For valves less than 2 inches, the drain hole shall not be less than 1/4 inch in diameter.

B. No safety valve for a steam boiler shall be smaller than 1/2 inch. No safety valve shall be larger than 4 1/2 inches. The inlet opening shall have an inside diameter equal to, or greater than, the seat diameter.

C. The minimum relieving capacity of the valve or valves shall be governed by the capacity marking on the boiler. The minimum valve capacity in pounds per hour shall be the greater of that determined by dividing the maximum BTU output at the boiler nozzle obtained by the firing of any fuel for which the unit is installed by 1,000, or shall be determined on the basis of the pounds of steam generated per hour per square foot of boiler heating surface as given in Table EHB-6. In many cases a greater relieving capacity of

valves than the minimum specified by these rules will have to be provided.

Table EHB-6. Minimum Pounds of Steam per Hour per Square Foot of Heating Surface		
	Fire Tube Boilers	**Water Tube Boilers**
Boiler Heating Surface:		
Hand fired	5	6
Stoker fired	7	8
Oil, gas, or pulverized fuel fired	8	10
Water Wall Heating Surface:		
Hand fired	8	8
Stoker fired	10	12
Oil, gas, or pulverized fuel fired	14	16

1. When a boiler is fired only by a gas giving a heat value not in excess of 200 BTU per cu. ft., the minimum safety valve or safety relief valve relieving capacity may be based on the value given for hand fired boilers above.

2. The minimum safety valve or safety relief valve relieving capacity for electric boilers shall be 3-1/2 pounds per hour per kilowatt input.

3. For heating surface determination see ASME Code Section IV, Paragraph HG-403.

D. The safety valve capacity for each steam boiler shall be such that with the fuel burning equipment installed and operating at maximum capacity, the pressure cannot rise more than 5 psig above the maximum allowable working pressure.

E. When operating conditions are changed, or additional boiler heating surface is installed, the valve capacity shall be increased, if necessary, to meet the new conditions. When additional valves are required, they may be installed on the outlet piping provided there is no intervening valve.

F. If there is any doubt as to the capacity of the safety valve, an accumulation test shall be run (see ASME Code, Section VI, Recommended Rules for Care and Operation of Heating Boilers).

G. No valve of any description shall be placed between the safety valve and the boiler, nor on the discharge pipe between the safety valve and the atmosphere. The discharge pipe shall be at least full size and be fitted with an open drain to prevent water lodging in the upper part of the safety valve or in the discharge pipe. When an elbow is placed on the safety valve discharge pipe, it shall be located close to the safety valve outlet or the discharge pipe shall be securely anchored and supported. All safety valve discharges shall be so located or piped as not to endanger persons working in the area.

AUTHORITY NOTE: Promulgated in accordance with R.S. 23:531 and R.S. 51:1424.

HISTORICAL NOTE: Promulgated by the Department of Public Safety, Office of State Fire Marshal, LR 33:1361 (July 2007).

§5042. Safety Relief Valve Requirements for Hot Water Heating and Hot Water Supply Boilers

A. Each hot water heating and hot water supply boiler shall have at least one ASME/National Board stamped and certified safety relief valve set to relieve at or below the maximum allowable working pressure of the boiler. Each hot water supply boiler shall have at least one ASME/National Board stamped and certified safety relief valve of the automatic reseating type set to relieve at or below maximum allowable working pressure of the boiler. Safety relief valves ASME/National Board stamped and certified as to capacity shall have pop action when tested by steam. When more than one safety relief valve is used on either a hot water heating or hot water supply boiler, the additional valve or valves shall be ASME/National Board stamped and certified and may be set within a range not to exceed 6 psig above the maximum allowable working pressure of the boiler up to and including 60 psig and 5 percent for those having a maximum allowable working pressure exceeding 60 psig. Safety relief valves shall be spring loaded. Safety relief valves shall be so arranged that they cannot be reset at a higher pressure than the maximum indicated in this Paragraph.

B. No materials liable to fail due to deterioration or vulcanization when subject to saturated steam temperature corresponding to capacity test pressure shall be used for any part.

C. No safety relief valve shall be smaller than 3/4 inch nor larger than 4-1/2 inch standard pipe size, except that boilers having a heat input not greater than 15,000 BTU per hour may be equipped with a safety relief valve of 2 inch standard pipe size. The inlet opening shall have an inside diameter approximately equal to, or greater than, the seat diameter. In no case shall the minimum opening through any part of the valve be less than 1/4 inch in diameter or its equivalent area.

D. The required steam relieving capacity, in pounds per hour, of the pressure relieving device or devices on a boiler shall be the greater of that determined by dividing the maximum output in BTU at the boiler nozzle obtained by the firing of any fuel for which the unit is installed by 1,000 or shall be determined on the basis of pounds of steam generated per hour per square foot of boiler heating surface as given in Table EHB-6. In many cases, a greater relieving capacity of valves will have to be provided than the minimum specified by these rules.

E. When operating conditions are changed, or additional boiler heating surface is installed the valve capacity shall be increased, if necessary, to meet the new conditions. The additional valves required because of changed conditions may be installed on the outlet piping provided there is no intervening valve.

F. Safety relief valve capacity for each boiler shall be such that, with the fuel burning equipment installed and operated at maximum capacity, the pressure cannot rise more than 10 percent above the maximum allowable working pressure. When more than one safety relief valve is used, the

over pressure shall be limited to 10 percent above the set pressure of the highest set value allowed.

G. If there is any doubt as to the capacity of the safety relief valve, an accumulation test shall be run (see ASME Code, Section VI, Recommended Rules for Care and Operation of Heating Boilers).

H. No valve of any description shall be placed between the safety relief valve and the boiler, nor on the discharge pipe between the safety relief valve and the atmosphere. The discharge pipe shall be not less than the diameter of the safety relief valve outlet and fitted with an open drain to prevent water lodging in the upper part of the safety relief valve or in the discharge pipe. When an elbow is placed on the safety relief valve discharge pipe, it shall be located close to the safety relief valve outlet or the discharge pipe shall be securely anchored and supported. All safety relief valve discharges shall be so located or piped as not to endanger persons working in the area.

AUTHORITY NOTE: Promulgated in accordance with R.S. 23:531 and R.S. 51:1424.

HISTORICAL NOTE: Promulgated by the Department of Public Safety, Office of State Fire Marshal, LR 33:1362 (July 2007).

§5043. Steam Gages

A. Each steam boiler shall have a steam gage or compound steam gage connected to its steam space or to its water column or to its steam connection. The gage or connection shall contain a siphon or equivalent device which will develop and maintain a water seal that will prevent steam from entering the gage tube. The connection shall be so arranged that the gage cannot be shut off from the boiler except by a cock placed in the pipe at the gage and provided with a tee or lever handle arranged to be parallel to the pipe in which it is located when the cock is open. The connections to the boiler shall be not less than 1/4 inch standard pipe size, but where steel or wrought iron pipe or tubing is used, they shall not be less than 2 inch standard pipe size. The minimum size of a siphon, if used, shall be 1/4 inch inside diameter. Ferrous and nonferrous tubing having inside diameters at least equal to that of standard pipe sizes listed above may be substituted for pipe.

B. The scale on the dial of a steam boiler gage shall be graduated to not less than 30 psig nor more than 60 psig. The travel of the pointer from 0 to 30 psig pressure shall be at least 3 inches.

AUTHORITY NOTE: Promulgated in accordance with R.S. 23:531 and R.S. 51:1424.

HISTORICAL NOTE: Promulgated by the Department of Public Safety, Office of State Fire Marshal, LR 33:1632 (July 2007).

§5044. Pressure or Altitude Gages and Thermometers

A. Each hot water boiler shall have a pressure or altitude gage connected to it or to its flow connection in such a manner that it cannot be shut off from the boiler except by a cock with tee or lever handle, placed on the pipe near the gage. The handle of the cock shall be parallel to the pipe in which it is located when the cock is open.

B. The scale on the dial of the pressure of altitude gage shall be graduated approximately to not less than 1-1/2 nor more than 3 times the pressure at which the safety relief valve is set.

C. Piping or tubing for pressure or altitude-gage connections shall be of nonferrous metal when smaller than 1 inch pipe size.

D. Each hot water boiler shall have a thermometer so located and connected that it shall be easily readable when observing the water pressure or altitude. The thermometer shall be so located that it shall at all times indicate the temperature in degrees Fahrenheit of the water in the boiler at or near the outlet.

AUTHORITY NOTE: Promulgated in accordance with R.S. 23:531 and R.S. 51:1424.

HISTORICAL NOTE: Promulgated by the Department of Public Safety, Office of State Fire Marshal, LR 33:1362 (2007).

§5045. Water Gage Glasses

A. Each steam boiler shall have one or more water gage glasses attached to the water column or boiler by means of valved fittings not less than 2 inch pipe size, with the lower fitting provided with a drain valve of a type having an unrestricted drain opening not less than 1/4 inch in diameter to facilitate cleaning. Gage glass replacement shall be possible under pressure. Water glass fittings may be attached directly to a boiler.

B. Boilers having an internal vertical height of less than 10 inches may be equipped with a water level indicator of the glass bulls-eye type provided the indicator is of sufficient size to show the water at both normal operating and low water cutoff levels.

C. The lowest visible part of the water gage glass shall be at least 1 inch above the lowest permissible water level recommended by the boiler manufacturer. With the boiler operating at this lowest permissible water level, there shall be no danger of overheating any part of the boiler.

D. Each boiler shall be provided at the time of manufacture with a permanent marker indicating the lowest permissible water level. The marker shall be stamped, etched, or cast in metal; or it shall be a metallic plate attached by rivets, screws, or welding; or it shall consist of material with documented tests showing its suitability as permanent marking for the application. This marker shall be visible at all times. Where the boiler is shipped with a jacket, this marker may be located on the jacket.

E. In electric boilers of the submerged electrode type, the water gage glass shall be so located to indicate the water levels both at startup and under maximum steam load conditions as established by the manufacturer.

F. In electric boilers of the resistance heating element type the lowest visible part of the water gage glass shall not be below the top of the electric resistance heating element. Each boiler of this type shall also be equipped with an automatic low-water electrical power cutoff so located as to automatically cut off the power supply before the surface of

the water falls below the top of the electrical resistance heating elements.

G. Tubular water glasses on electric boilers having a normal water content not exceeding 100 gallons shall be equipped with a protective shield.

AUTHORITY NOTE: Promulgated in accordance with R.S. 23:531 and R.S. 51:1424.

HISTORICAL NOTE: Promulgated by the Department of Public Safety, Office of State Fire Marshal, LR 33:1363 (July 2007).

§5046. Stop Valves

A. When a stop valve is used in the supply pipe connection of a single steam boiler, there shall be one used in the return pipe connection.

B. Stop valves in single hot water heating boilers shall be located at an accessible point in the supply and return pipe connections, as near the boiler nozzle as is convenient and practicable, to permit draining the boiler without emptying the system.

C. When the boiler is located above the system and can be drained without draining the system, stop valves may be eliminated.

D. A stop valve shall be used in each supply and return pipe connection of two or more boilers connected to a common system.

E. All valves or cocks shall conform to the applicable portions of HF-203 of Section IV of the ASME Code and may be ferrous or nonferrous.

F. The minimum pressure rating of all valves or cocks shall be at least equal to the pressure stamped upon the boiler, and the temperature rating of such valves or cocks, including all internal components, shall be not less than 250° F.

G. Valves or cocks shall be flanged, threaded or have ends suitable for welding or brazing.

H. All valves or cocks with stems or spindles shall have adjustable pressure type packing glands and, in addition, all plug type cocks shall be equipped with a guard or gland. The plug or other operating mechanism shall be distinctly marked in line with the passage to indicate whether it is opened or closed.

I. All valves or cocks shall have tight closure when under boiler pressure test.

J. When stop valves are used, they shall be properly designated substantially by tags of metal or other durable material fastened to them.

AUTHORITY NOTE: Promulgated in accordance with R.S. 23:531 and R.S. 51:1424.

HISTORICAL NOTE: Promulgated by the Department of Public Safety, Office of State Fire Marshal, LR 33:1363 (July 2007).

§5047. Feed Water Connections

A. Feed water, makeup water, or water treatment shall be introduced into a boiler through the return piping system. Alternatively, makeup water or water treatment may be introduced through an independent connection. The water flow from the independent connection shall not discharge directly against parts of the boiler exposed to direct radiant heat from the fire. Makeup water or water treatment shall not be introduced through openings or connections provided inspection or cleaning, safety valve, safety relief valve, blow off, water column, water gage glass, pressure gage, or temperature.

B. The makeup water pipe shall be provided with a check valve near the boiler and a stop valve or cock between the check valve and the boiler or between the check valve and the return pipe system.

AUTHORITY NOTE: Promulgated in accordance with R.S. 23:531 and R.S. 51:1424.

HISTORICAL NOTE: Promulgated by the Department of Public Safety, Office of State Fire Marshal, LR 33:1363 (July 2007).

§5048. Water Column and Water Level Control Pipes

A. The minimum size of ferrous or nonferrous pipes connecting a water column to a steam boiler shall be 1 inch. No outlet connections, except for damper regulator, feed water regulator, steam gages, or apparatus which does not permit the escape of any steam or water except for manually operated blow downs, shall be attached to a water column or the piping connecting a water column to a boiler (see HG-705 of Section IV of the ASME Code for introduction of feed water into a boiler). If the water column, gage glass, low-water fuel cutoff, or other water level control device is connected to the boiler by pipe and fittings, no shutoff valves of any type shall be placed in such pipe, and a cross or equivalent fitting to which a drain valve and piping may be attached shall be placed in the water piping connection at every right angle turn to facilitate cleaning.

B. The steam connections to the water column of a horizontal fire tube wrought iron boiler shall be taken from the top of the shell or the upper part of the head, and the water connection shall be taken from a point not above the center line of the shell. For a cast iron boiler, the steam connection to the water column shall be taken from the top of an end section or the top of the steam header, and the water connection shall be made on an end section not less than 6 inches below the bottom connection to the water gage glass.

AUTHORITY NOTE: Promulgated in accordance with R.S. 23:531 and R.S. 51:1424.

HISTORICAL NOTE: Promulgated by the Department of Public Safety, Office of State Fire Marshal, LR 33:1364 (July 2007).

§5049. Return Pump

A. Each boiler equipped with a condensate return pump shall be provided with a water level control arranged to automatically maintain the water level in the boiler within the range of the gage glass.

AUTHORITY NOTE: Promulgated in accordance with R.S. 23:531 and R.S. 51:1424.

HISTORICAL NOTE: Promulgated by the Department of Public Safety, Office of State Fire Marshal, LR 33:1364 (July 2007).

Subchapter D. Potable Water Heaters (Hot Water Heaters Other than Hot Water Supply Boilers)

§5052. Service Restrictions and Exceptions

A. Potable water heaters supplying potable hot water for commercial purposes that exceed a heat input of 200,000 BTU per hour or a nominal water-containing capacity of 120 gallons, shall be designed, constructed, inspected and stamped in conformity with Part HLW of the ASME Code, Section IV.

B. Potable water heaters supplying potable hot water for commercial purposes that do not exceed a heat input of 200,000 BTU per hour or a nominal water-containing capacity of 120 gallons, but has a nominal water-containing capacity of 50 gallons, shall be designed and constructed to underwriters laboratories or other nationally recognized standard and shall bear their label on the completed unit.

C. All other potable water heaters not otherwise exempted by the Act, shall be designed and constructed to underwriters laboratories or other nationally recognized standard and shall bear their label on the completed unit.

D. The maximum allowable working pressure of a potable water heater shall in no case exceed the pressure indicated by the manufacturer's identification stamped or cast on the heater or a plate or label secured to it. In no case shall the maximum allowable working pressure of a potable water heater exceed 160 psi or a water temperature of 210° F.

AUTHORITY NOTE: Promulgated in accordance with R.S. 23:531 and R.S. 51:1424.

HISTORICAL NOTE: Promulgated by the Department of Public Safety, Office of State Fire Marshal, LR 33:1364 (July 2007).

§5053. Safety Relief Valves

A. Each potable water heater shall have at least one ASME certified pressure temperature relief valve of the automatic reseating type set to relieve at or below the maximum allowable working pressure of the potable water heater and/or no greater than 210° F. Safety relief valves officially rated as to capacity shall have pop action when tested by steam. When more than one safety relief valve is used on a potable water heater, the additional valve or valves shall be ASME rated and may be set within a range not to exceed 10 percent of the set pressure of the first valve. Safety relief valves shall be spring-loaded. Safety relief valves shall be so arranged that they cannot be reset at a higher pressure.

B. When water supply to a potable water heater exceeds 75 percent of the design pressure of the water heater, a pressure reducing valve is required.

AUTHORITY NOTE: Promulgated in accordance with R.S. 23:531 and R.S. 51:1424.

HISTORICAL NOTE: Promulgated by the Department of Public Safety, Office of State Fire Marshal, LR 33:1364 (July 2007).

§5054. Controls

A. Each individual automatically-fired potable water heater, in addition to the operating control used for normal water heater operation shall have a separate high limit temperature actuated combustion control that will automatically cut off the fuel supply. The temperature range of the high limit temperature actuated control shall not allow a setting over 210° F.

1. On gas-fired water heaters, the high limit temperature control when actuated shall shut off the fuel supply with a shut off means other than the operating control valve. Separate valves may have a common body.

2. On electrically-heated potable water heaters, the high limit temperature control when actuated shall cut off all power to the operating controls.

3. On oil-fired potable water heaters, the limit temperature control when actuated shall cut off all current flow to the burner mechanism.

B. All potable water heaters shall be equipped with suitable primary (flame safeguards) safety controls, safety limit switches, and burners, or electrical elements as required by one of the following nationally recognized standards:

1. ANSI/UL 732 Standard for Safety Oil-Fired Water Heaters (UL 732);

2. ANSI Z 21.10.3 American National Standards for Gas Water Heaters, Volume III, Circulating Rank, Instantaneous and Large Automatic Storage Type water Heaters;

3. Underwriters Laboratories Inc. UL 795. Standards for Safety, Commercial-Industrial Gas-Heating Equipment;

4. Underwriters Laboratories Inc. UL 1453, Standards for Safety, Electric Booster and Commercial Storage Tank Water Heaters.

C. The symbol of the certifying organization which has investigated such as having complied with a nationally recognized standard shall be affixed to the equipment and shall be considered as evidence that controls and heat generating apparatus were manufactured in accordance with that standard. (A certifying organization is one that provides uniform testing, examination, and listing procedures under established, nationally recognized standards and that is acceptable to the jurisdiction.)

AUTHORITY NOTE: Promulgated in accordance with R.S. 23:531 and R.S. 51:1424.

HISTORICAL NOTE: Promulgated by the Department of Public Safety, Office of State Fire Marshal, LR 33:1364 (July 2007).

§5055. Repairs

A. Whenever repairs are made to fittings or appliances, or it becomes necessary to replace them, the repairs must comply with Section IV of the ASME Code for new construction. Welded repairs must meet the additional requirements.

AUTHORITY NOTE: Promulgated in accordance with R.S. 23:531 and R.S. 51:1424.
HISTORICAL NOTE: Promulgated by the Department of Public Safety, Office of State Fire Marshal, LR 33:1365 (July 2007).

Subchapter E. General Requirements

§5058. Notice of Internal Inspection of Boilers

A. The owner or user of a boiler or boilers not exempted by the Act or by rules and regulations promulgated under the Act shall be provided 14 days notice of impending internal inspection requirements, by the inspector responsible for inspections of subject boiler(s). No such notice shall be required for external inspections. No inspection shall be made on Sunday or other legal holiday by an inspector employed by the Department of Public Safety except in case of accident or other emergency.

AUTHORITY NOTE: Promulgated in accordance with R.S. 23:531 and R.S. 51:1424.
HISTORICAL NOTE: Promulgated by the Department of Public Safety, Office of State Fire Marshal, LR 33:1365 (July 2007).

§5059. Preparation for Internal Inspection

A. The owner or user shall prepare each boiler for internal inspection, and shall prepare for and apply a hydrostatic pressure test, whenever necessary, on the date arranged by the inspector. The boiler shall be prepared for internal inspection as follows.

1. Water shall be drawn off and the boiler washed thoroughly.

2. Manhole and hand hole plates, washout plugs and inspection plugs in water column connections shall be removed as required by the inspector. The furnace and combustion chambers shall be cooled and thoroughly cleaned.

3. All grates of internally fired boilers shall be removed.

4. Insulation or brickwork shall be removed as required by the inspector in order to determine the condition of the boiler, headers, furnace, supports or other parts.

5. The pressure gauge shall be removed for testing, as required by the inspector.

6. Any leakage of steam or hot water into the boiler shall be prevented by disconnecting the pipe or valve(s) at the most convenient point or any appropriate means approved by the inspector.

7. Before opening the manhole or hand hole covers and entering any parts of the steam generating unit connected to a common header with other boilers, the non-return and steam stop valves must be closed, tagged and padlocked, and drain valves or cocks between the two valves opened. The feed valves must be closed, tagged and padlocked, and drain valves or cocks located between the two valves opened. After draining the boiler, the blow off valves shall be closed, tagged and padlocked. Blow off lines, where practicable, shall be disconnected between pressure parts and valves. All drain and vent lines shall be opened.

AUTHORITY NOTE: Promulgated in accordance with R.S. 23:531 and R.S. 51:1424.
HISTORICAL NOTE: Promulgated by the Department of Public Safety, Office of State Fire Marshal, LR 33:1365 (July 2007).

§5060. Boilers Improperly Prepared for Inspection

A. If a boiler has not been properly prepared for an internal inspection, or if the owner or user fails to comply with the requirements for a pressure test as set forth in these rules, the inspector may decline to make the inspection or test and the inspection certificate shall be withheld or the right to operate revoked, until the owner or user complies with the requirement. The owner or user shall be charged the applicable inspection fees as set by law for this missed inspection.

AUTHORITY NOTE: Promulgated in accordance with R.S. 23:531 and R.S. 51:1424.
HISTORICAL NOTE: Promulgated by the Department of Public Safety, Office of State Fire Marshal, LR 33:1365 (July 2007).

§5061. Removal of Covering to Permit Inspection

A. If the boiler is jacketed so that the longitudinal seams of shells, drums or domes cannot be seen, sufficient jacketing, setting wall, or other form of casing or housing shall be removed to permit reasonable inspection of the seams and other areas necessary to determine the condition and safety of the boiler, provided such information cannot be determined by other means.

AUTHORITY NOTE: Promulgated in accordance with R.S. 23:531 and R.S. 51:1424.
HISTORICAL NOTE: Promulgated by the Department of Public Safety, Office of State Fire Marshal, LR 33:1365 (July 2007).

§5062. Lap Seam Crack

A. The shell or drum of a boiler, in which a lap seam crack is discovered along a longitudinal riveted joint, shall be immediately condemned. Patching is prohibited.

B. *Lap Seam Crack*—a crack found in lap seams, extending parallel to the longitudinal joint and located either between or adjacent to rivet holes.

AUTHORITY NOTE: Promulgated in accordance with R.S. 23:531 and R.S. 51:1424.
HISTORICAL NOTE: Promulgated by the Department of Public Safety, Office of State Fire Marshal, LR 33:1365 (July 2007).

§5063. Pressure Test

A. A pressure test, when applied to boilers or pressure vessels, need not exceed the maximum allowable working pressure or the setting of the lowest set safety valves. The pressure shall be under proper control so that in no case shall the required test pressure be exceeded.

B. During a pressure test, the safety valve or valves shall be removed or each valve disk shall be held to its seat by means of a testing clamp and not by screwing down the compression screw upon the spring. A plug device designed for this purpose may be used.

C. The temperature of the water used to apply a hydrostatic test shall be no less than ambient temperature, but in no case less than 70° F. The maximum temperature of the water during inspection shall not exceed 120° F.

D. When a hydrostatic test is applied to determine tightness, the pressure shall be equal to the normal operating pressure but need not exceed the release pressure of the safety valve having the lowest release pressure setting.

AUTHORITY NOTE: Promulgated in accordance with R.S. 23:531 and R.S. 51:1424.

HISTORICAL NOTE: Promulgated by the Department of Public Safety, Office of State Fire Marshal, LR 33:1366 (July 2007).

§5064. Inspection of Power Boilers

A. The internal and external inspections of power boilers shall meet the guidelines of Subsection C6 of the ASME Code, Section VII, Recommended Rules for Care of Power Boilers; and the National Board Inspection Code.

AUTHORITY NOTE: Promulgated in accordance with R.S. 23:531 and R.S. 51:1424.

HISTORICAL NOTE: Promulgated by the Department of Public Safety, Office of State Fire Marshal, LR 33:1366 (July 2007).

§5065. Inspection of Heating, Supply and Potable Water Boilers

A. The internal (when required), and the external inspections of steam and hot water heating, hot water supply and potable water boilers (hot water heaters), shall meet the guidelines of 7.09 and 8.09 of the ASME Code, Section VI, Recommended Rules for Care of Heating Boilers; and the National Board Inspection Code.

AUTHORITY NOTE: Promulgated in accordance with R.S. 23:531 and R.S. 51:1424.

HISTORICAL NOTE: Promulgated by the Department of Public Safety, Office of State Fire Marshal, LR 33:1366 (July 2007).

§5066. Changes from Louisiana Boiler Law/Rules and Regulations

A. On each inspection of a boiler, the inspector shall determine if changes or departures from the Louisiana Boiler Law/Rules and Regulations have taken place since the previous inspection was made.

B. If repairs have been made to a boiler, the owner or user shall provide documentation to the inspector determining if the repairs meet the requirements of these rules and regulations. In all cases where repairs and/or replacements are made or new fittings or appurtenances are installed, the material and workmanship must comply with the Louisiana Boiler Law/Rules and Regulations for new installations.

AUTHORITY NOTE: Promulgated in accordance with R.S. 23:531 and R.S. 51:1424.

HISTORICAL NOTE: Promulgated by the Department of Public Safety, Office of State Fire Marshal, LR 33:1366 (July 2007).

§5067. Defective Conditions Disclosed at Time of External Inspection

A. If, upon an external inspection, there is evidence of a leak or crack, sufficient covering of the boiler shall be removed to permit the inspector to satisfactorily determine the safety of the boiler. If the covering cannot be removed at that time, the inspector may order the boiler taken out of service until such time as the covering can be removed and proper examination made.

AUTHORITY NOTE: Promulgated in accordance with R.S. 23:531 and R.S. 51:1424.

HISTORICAL NOTE: Promulgated by the Department of Public Safety, Office of State Fire Marshal, LR 33:1366 (July (July 2007).

§5068. Unsafe Boilers

A. Whenever the chief inspector, a deputy inspector or special inspector finds a boiler in operation or about to be placed in operation, the continued use of which constitutes an imminent hazard to life or limb, he shall order such boiler to be instantly taken out of service and/or not placed in service until proper repairs or changes have been made. He shall at that time serve a preliminary order on the owner or user ordering the use of such boiler discontinued. He shall have the owner or user sign the preliminary order, and submit the original copy to the chief inspector. He shall notify the chief inspector by telephone when a preliminary order is issued.

AUTHORITY NOTE: Promulgated in accordance with R.S. 23:531 and R.S. 51:1424.

HISTORICAL NOTE: Promulgated by the Department of Public Safety, Office of State Fire Marshal, LR 33:1366 (July 2007).

§5069. Condemned Boilers

A. A deputy inspector or special inspector, after having inspected a boiler and declared such boiler unfit for further service, shall notify the chief boiler inspector and submit a written report within seven calendar days of the inspection.

B. Any person, firm, partnership, or corporation using a condemned boiler shall be subject to the penalties provided by the Act.

AUTHORITY NOTE: Promulgated in accordance with R.S. 23:531 and R.S. 51:1424.

HISTORICAL NOTE: Promulgated by the Department of Public Safety, Office of State Fire Marshal, LR 33:1366 (July 2007).

§5070. Owner or User to Notify Chief Inspector of Accident

A. When an accident occurs to a boiler, the owner or user shall, within 7 calendar days, notify the chief inspector by submitting a detailed report of the accident. In the event of a personal injury or any explosion, notice shall be given within 12 hours by telephone, telegraph or messenger, and neither the boiler, nor any parts thereof, shall be removed or disturbed before permission has been given by the chief inspector, except for the purpose of saving human life and limiting consequential damage.

AUTHORITY NOTE: Promulgated in accordance with R.S. 23:531 and R.S. 51:1424.

HISTORICAL NOTE: Promulgated by the Department of Public Safety, Office of State Fire Marshal, LR 33:1366 (July 2007).

§5071. Automatic Low Water Fuel Cutoff and/or Water Feeding Device

A. Each automatically fired steam boiler shall have an automatic low-water fuel cutoff so located as to automatically cut off the fuel supply when the surface of the water falls to the lowest visible part of the water gauge glass. If a water feeding device is installed, it shall be so constructed that the water inlet valve cannot feed water into the boiler through the float chamber and so located as to supply requisite feed water. Such a fuel cutoff or water feeding device shall comply with HG-606 of the ASME Code, Section IV.

B. Each automatically fired hot water heating boiler with heat input greater than 400,000 BTU/hr shall have an automatic low-water fuel cutoff which has been designed for hot water service, and it shall be located as to automatically cut off the fuel supply when the surface of the water falls to the lowest safe water level established by the boiler manufacturer. Such low-water fuel cutoff shall comply with HG-614 of the ASME Code, Section IV.

AUTHORITY NOTE: Promulgated in accordance with R.S. 23:531 and R.S 51:1424.

HISTORICAL NOTE: Promulgated by the Department of Public Safety, Office of State Fire Marshal, LR 33:1367 (July 2007).

§5072. Pressure Reducing Valves

A. Where pressure reducing valves are used, one or more safety relief valves shall be provided on the low pressure side of the reducing valve when the piping or equipment on the low pressure side does not meet the requirements for the full initial pressure. The safety or safety relief valves shall be located adjoining or as close as possible to the reducing valve. Proper protection shall be provided to prevent injury or damage caused by the escaping fluid from the discharge of the safety relief valves if vented to the atmosphere. The combined discharge capacity of the safety or safety relief valves shall be such that the pressure rating shall not be exceeded in case the reducing valve fails in the open position.

B. The use of hand controlled bypasses around the reducing valves are permissible. If a bypass is used around the reducing valve, the safety valve required on the low pressure side shall be of sufficient capacity to relieve all the fluid that can pass through the bypass without over pressuring the low pressure side.

C. A pressure gauge shall be installed on the low pressure side of the reducing valve.

AUTHORITY NOTE: Promulgated in accordance with R.S. 23:531 and R.S. 51:1424.

HISTORICAL NOTE: Promulgated by the Department of Public Safety, Office of State Fire Marshal, LR 33:1367 (July 2007).

§5073. Boiler Blow Off Equipment

A. The blow down from a boiler that enters a sanitary sewer system or blow down which is considered a hazard to life or property shall pass through some form of blow off equipment that will reduce the pressure leaving the blow down equipment to not more than 5 psi, and the temperature to no more then 150° F.

B. All blow off equipment shall be fitted with openings to facilitate cleaning and inspection and shall conform to the recommended rules for National Board Boiler Blow off Equipment.

AUTHORITY NOTE: Promulgated in accordance with R.S. 23:531 and R.S. 51:1424.

HISTORICAL NOTE: Promulgated by the Department of Public Safety, Office of State Fire Marshal, LR 33:1367 (July 2007).

§5074. Location of Discharge Piping Outlets

A. The discharge of safety valves, blow off pipes and other outlets shall be located and supported so as to prevent injury to personnel.

AUTHORITY NOTE: Promulgated in accordance with R.S. 23:531 and R.S. 51:1424.

HISTORICAL NOTE: Promulgated by the Department of Public Safety, Office of State Fire Marshal, LR 33:1367 (July 2007).

§5075. Repairs or Alterations

A. Where repairs or alterations to a boiler are necessary, an authorized inspector shall be called for consultation and advice as to the best method of making such repairs or alterations. After such repairs or alterations are made, they shall be reviewed by and found acceptable to an authorized inspector. Organizations making repairs or alterations shall be qualified in accordance with the rules and regulations.

AUTHORITY NOTE: Promulgated in accordance with R.S. 23:531 and R.S. 51:1424.

HISTORICAL NOTE: Promulgated by the Department of Public Safety, Office of State Fire Marshal, LR 33:1367 (July 2007).

§5076. Supports

A. Each boiler shall be supported by masonry or structural supports of sufficient strength and rigidity to safely support the boiler and its contents. There shall be no excessive vibration in either the boiler or its connecting piping.

AUTHORITY NOTE: Promulgated in accordance with R.S. 23:531 and R.S. 51:1424.

HISTORICAL NOTE: Promulgated by the Department of Public Safety, Office of State Fire Marshal, LR 33:1367 (July 2007).

§5077. Boiler Door Latches

A. A water tube boiler shall have the firing doors of the inward opening type, unless such doors are provided with substantial and effective latching or fastening devices or otherwise so constructed as to prevent them, when closed, from being blown open by pressure on the furnace side.

B. These latches or fastenings shall be of the positive self-locking type. Friction contacts, latches, or bolts actuated by springs shall not be used. The foregoing requirements for latches or fastening shall not apply to coal openings of downdraft or similar furnaces.

C. All other doors, except explosion doors, not used in the firing of the boiler, may be provided with bolts or fastenings in lieu of self-latching devices.

D. Explosion doors, if used and if located in the setting walls within 7 feet of the firing floor or operating platform, shall be provided with substantial deflectors to divert the blast.

AUTHORITY NOTE: Promulgated in accordance with R.S. 23:531 and R.S. 51:1424.

HISTORICAL NOTE: Promulgated by the Department of Public Safety, Office of State Fire Marshal, LR 33:1367 (July 2007).

§5078. Clearance

A. When boilers are replaced or new boilers are installed in either existing or new buildings, they shall be so located hat adequate space will be provided for the proper operation of the boilers and their appurtenances, for the inspection of all surfaces, tubes, water walls economizers, piping, valves and other equipment, and for their necessary maintenance and repair and replacement tubes.

AUTHORITY NOTE: Promulgated in accordance with R.S. 23:531 and R.S. 51:1424.

HISTORICAL NOTE: Promulgated by the Department of Public Safety, Office of State Fire Marshal, LR 33:1368 (July 2007).

§5079. Ladders and Runways

A. When necessary for safety, there shall be a steel runway or platform of standard construction installed across the tops of adjacent boilers or at some other convenient level for the purpose of affording safe access. All walkways shall have at least two means of exit, each to be remotely located from the other.

AUTHORITY NOTE: Promulgated in accordance with R.S. 23:531 and R.S. 51:1424.

HISTORICAL NOTE: Promulgated by the Department of Public Safety, Office of State Fire Marshal, LR 33:1368 (July 2007).

§5080. Exit from Boiler Room

A. All boiler rooms exceeding 500 square feet floor area and containing one or more boilers having a fuel burning capacity 1,000,000 BTU/hr., or equivalent electrical heat input, shall have at least two means of exit. Each shall be remotely located from the other. Each elevation in such boiler room shall have two means of exit, each remotely located from the other.

AUTHORITY NOTE: Promulgated in accordance with R.S. 23:531 and R.S. 51:1424.

HISTORICAL NOTE: Promulgated by the Department of Public Safety, Office of State Fire Marshal, LR 33:1368 (July 2007).

§5081. Air and Ventilation Requirements-Combustion Air Supply and Ventilation of Boiler Room

A. A permanent source of outside air shall be provided for each boiler room to permit satisfactory combustion of the fuel as well as proper ventilation of the boiler room under normal operating conditions.

B. The total requirements of the burners for all fired pressure vessels in the boiler room must be used to determine the louver sizes whether fired by coal, oil or gas; however, the minimum net free louvered area must not be less than 1 square foot. The following table or formula shall be used to determine the net louvered area in square feet.

Input (Btu/Hour)	Required Air (Cu/Ft/Min)	Minimum Net Louvered Area (Sq. Ft.)
500,000	125	1.0
1,000,000	250	1.0
2,000,000	500	1.6
3,000,000	750	2.5
4,000,000	1,000	3.3
5,000,000	1,250	4.1
6,000,000	1,500	5.0
7,000,000	1,750	5.8
8,000,000	2,000	6.6
9,000,000	2,250	7.5
10,000,000	2,500	8.3

(BTUH) 10,000) X 2.5 = CFM - 300 /dfm per sq. ft. of net required area.

C. When mechanical ventilation is used in lieu of Subsection A above, the supply of combustion and ventilation air to the boiler room and the firing device shall be interlocked with the fan so the firing device will not operate with the fan off. The velocity of the air through the ventilating fan shall not exceed 500 feet per minute and the total air delivered shall be equal to or greater than shown in Subsection B above.

AUTHORITY NOTE: Promulgated in accordance with R.S. 23:531 and R.S. 51:1424.

HISTORICAL NOTE: Promulgated by the Department of Public Safety, Office of State Fire Marshal, LR 33:1368 (July 2007).

§5082. Gas Burners

A. For installations which are gas fired, the burners used shall conform to the applicable requirements of the American Gas Association or other nationally recognized standards.

AUTHORITY NOTE: Promulgated in accordance with R.S. 23:531 and R.S. 51:1424.

HISTORICAL NOTE: Promulgated by the Department of Public Safety, Office of State Fire Marshal, LR 33:1368 (July 2007).

§5083. Attendance on Power Boilers

A. No power boiler while in active service, i.e., that portion of time when the main stop valves are open and the fires are burning, shall be left unattended longer than it will take the water level to drop from the normal operating level in the water gauge glass, or by indicating devices or recorders, when the feed water is shut off and the boiler is forced to its maximum capacity unless the following are complied with:

1. the boiler is equipped with an audible alarm that will operate when the water reaches the highest and/or the lowest permissible operating level, or, for boilers having no fixed steam or water line, when the highest permissible operating temperature is reached. The audible alarm shall be sufficiently loud that it can be plainly heard at the most remote point from the boiler that the attendant is required to work; and

2. the boiler is equipped with two independently connected low water safety devices that will shut off the fuel to the burner or burners when the water reaches the lowest permissible operating level, or, for boilers having no fixed steam or water line, when the highest permissible operating temperature is reached. These devices shall require manual resetting; or

3. the attendant shall personally check the operation of the boiler, the necessary auxiliaries, and the water level in the boiler at such intervals as are necessary to insure safe operation of the boiler, and in no case shall this exceed 120 minutes.

B. The operation of the automatic controls shall be checked at the beginning of each shift.

AUTHORITY NOTE: Promulgated in accordance with R.S. 23:531 and R.S. 51:1424.

HISTORICAL NOTE: Promulgated by the Department of Public Safety, Office of State Fire Marshal, LR 33:1368 (July 2007).

§5084. Restamping of Boilers

A. When the stamping on a boiler becomes indistinct, the inspector shall instruct the owner or user to have it restamped. Request for permission to restamp the boiler shall be made to the chief inspector and proof of the original stamping shall accompany the request. The chief inspector may grant such authorization. Restamping authorized by the chief inspector shall be done only in the presence of an authorized inspector, and shall be identical with the original stamping. If the ASME Code symbol is to be restamped, it may only be done by the original manufacturer of the boiler in the presence of the inspector who signed the manufacturers data report. Notice of completion of such restamping shall be filed with the chief inspector by the inspector who witnessed the stamping on the boiler, together with a facsimile of the stamping applied.

AUTHORITY NOTE: Promulgated in accordance with R.S. 23:531 and R.S. 51:1424.

HISTORICAL NOTE: Promulgated by the Department of Public Safety, Office of State Fire Marshal, LR 33:1369 (July 2007).

§5085. Moving of Boilers

A. When a boiler is moved from one setting to another setting, the owner or user thereof shall furnish the chief inspector with a notice of change in location, and shall have the boiler inspected by an authorized inspector prior to firing of the boiler at the new location.

AUTHORITY NOTE: Promulgated in accordance with R.S. 23:531 and R.S. 51:1424.

HISTORICAL NOTE: Promulgated by the Department of Public Safety, Office of State Fire Marshal, LR 33:1369 (July 2007).

§5086. Safety Appliances

A. No person shall attempt to remove or do any work on any safety appliance prescribed by these rules and regulations while the appliance is subject to pressure.

B. Should any of these appliances be removed for repair during an outage of the boiler, they must be reinstalled and in proper working order before the boiler is again placed in service.

C. No person shall alter any safety or safety relief valves or pressure relief devices in any manner to maintain a working pressure in excess of that stated on the boiler inspection certificate.

D. Repairs to safety or safety relief valves shall be made only by organizations qualified.

AUTHORITY NOTE: Promulgated in accordance with R.S. 23:531 and R.S. 51:1424.

HISTORICAL NOTE: Promulgated by the Department of Public Safety, Office of State Fire Marshal, LR 33:1369 (July 2007).

§5087. Variations

A. Any person who believes the rules and regulations promulgated by the assistant secretary are unreasonable or impose an undue burden upon the owner or user, may request a variation from such rule or regulation. The request shall be in writing and shall specify how equivalent safety is to be maintained. The assistant secretary, after investigation and such hearing as he may direct, may grant such variation from the terms of any rule or regulation provided such special conditions as may be specified are maintained in order to provide equivalent safety.

B. When there is a reason to believe, or upon receipt of a complaint that a variation does not provide freedom from danger equivalent to the published rule or regulation, the

assistant secretary, after notice to the owner or user and complainant after such hearing and investigation as he may direct, may continue to in force, suspend, revoke or modify the conditions specified in any variation. No declaration, act or omission of the assistant secretary, or the chief inspector, deputy inspector or special inspectors other than a written order authorizing a variation as permitted above, shall be deemed to exempt, either wholly or in part, expressly or implied, any owner or user from full compliance with the terms of any rule or regulation.

AUTHORITY NOTE: Promulgated in accordance with R.S. 23:531 and R.S. 51:1424.

HISTORICAL NOTE: Promulgated by the Department of Public Safety, Office of State Fire Marshal, LR 33:1369 (July 2007).

§5088. Conditions not Covered by these Rules and Regulations

A. For any condition not covered by these rules and regulations, the applicable provisions of the ASME Code or the National Board Inspection Code shall apply.

AUTHORITY NOTE: Promulgated in accordance with R.S. 23:531 and R.S. 51:1424.

HISTORICAL NOTE: Promulgated by the Department of Public Safety, Office of State Fire Marshal, LR 33:1369 (July 2007).

§5089. Suggestions for Operations

A. It is suggested that the Recommended Rules for Care of Power Boilers, Section VII, and the Recommended Rules for Care and Operation of Heating Boilers, Section VI of the ASME Code, be used as a guide for proper and safe operating practices.

AUTHORITY NOTE: Promulgated in accordance with R.S. 23:531 and R.S. 51:1424.

HISTORICAL NOTE: Promulgated by the Department of Public Safety, Office of State Fire Marshal, LR 33:1369 (July 2007).

Title 55
PUBLIC SAFETY
Part VI. Uniform Construction Code Enforcement

Editor's Note: The Uniform Construction Code, LAC 55:VI.Chapters 1-3, has been moved to LAC 17, Construction.

Chapter 5. Enforcement of Louisiana State Uniform Construction Code

§501. General

A. Effective January 1, 2007, all municipalities and parishes shall enforce the Louisiana State Uniform Construction Code. Municipalities and parishes may establish agreements with other governmental entities or registered and certified third party providers to issue permits and enforce the state uniform construction code. No municipality or parish shall require that residential building plans for one and two family dwellings be prepared or stamped by a licensed architect or engineer if the dwelling falls within the prescriptive codes of the Louisiana State Uniform Construction Code, except as required by Chapter 12 of the Louisiana State Plumbing Code.

AUTHORITY NOTE: Promulgated in accordance with R.S. 40:1730.22(C) and (D).

HISTORICAL NOTE: Promulgated by the Department of Public Safety and Corrections, State Uniform Construction Code Council, LR 33:291 (February 2007).

§503. Farm or Recreational Structures

A. Definitions

1. For the purposes of these regulations the words defined in this Section have the following meaning.

Farm Structure—a structure which is constructed on a farm, other than a residence or structure attached to it, for use on the farm including, but not limited to barns, sheds and poultry houses.

Private Outdoor Recreational Structure—a hunting or fishing camp or other structure that is:

i. not used as a residence;

ii. not attached to a residence;

iii. not utilizing the same physical address of a residence;

iv. not located on the same property as a residence;

v. not capable of qualifying for a homestead exemption;

vi. not used for commercial purposes;

vii. not located within the corporate limits of a municipality; and

viii. not located in an approved subdivision within a jurisdiction:

(a). for purposes of this Section, residence shall have the following meaning: a dwelling unit used or occupied or intended to be used or occupied for permanent living purposes as opposed to one's place of temporary sojourn.

B. Exemptions to State Uniform Construction Code

1. The governing authority of a parish or municipality may not enforce the Louisiana State Uniform Construction Code pertaining to the construction or improvement of a farm structure or private outdoor recreational structure. For private outdoor recreational structures only, the property owner of record, in applying for an exemption, shall execute an affidavit attesting to the property's or structure's exempt status. The affidavit shall be filed into the parish conveyance records.

AUTHORITY NOTE: Promulgated in accordance with R.S. 40:1730.22(C) and (D).

HISTORICAL NOTE: Promulgated by the Department of Public Safety and Corrections, State Uniform Construction Code Council, LR 33:291 (February 2007), amended LR 34:2407 (November 2008).

§504. Exemption for Industrial Facilities

A. For purposes of R.S. 1730.29, the exemption (excluding the applicable requirements of the Louisiana State Plumbing Code) for industrial facilities shall apply to any structure or building constructed inside the restricted access area of the facility. However, any structure or building that is constructed outside the restricted access area of the facility or any structure or building located inside the restricted access area of the facility that is accessible by the public are subject to the requirements of the Louisiana State Uniform Construction Code.

AUTHORITY NOTE: Promulgated in accordance with R.S. 40:1730.22(C) and (D).

HISTORICAL NOTE: Promulgated by the Department of Public Safety and Corrections, State Uniform Construction Code Council, LR 34:2408 (November 2008).

§505. Commercial Plan Review

A. Until December 31, 2007, where a parish or municipality is not providing plan review, architects, engineers, owners, parishes or municipalities on commercial projects may request International Building Code plan review by the Office of State Fire Marshal.

AUTHORITY NOTE: Promulgated in accordance with R.S. 40:1730.22(C) and (D).

HISTORICAL NOTE: Promulgated by the Department of Public Safety and Corrections, Uniform Construction Code

Council, LR 33:1683 (August 2007), amended LR 35:2819 (December 2009), repromulgated LR 36:327 (February 2010).

Chapter 7. Certificates of Registration

§701. General

A. On and after January 1, 2007, no person shall practice as a code enforcement officer in this state unless registered with the Louisiana State Uniform Construction Code Council (council). A person desiring to be registered as a parish or municipality building code enforcement officer or a third party provider shall apply to the council for a certificate of registration. The applicant shall apply on the application form prescribed the by the council. An applicant shall furnish satisfactory proof to the council of valid certification. A certificate of registration is valid for one year and expires on the last day of the month of issuance. Those possessing certificates of registration must renew their certificates in order to remain in good standing with the council. After the initial registration year expires, the renewal expiration dates shall be as follows. Building code enforcement officers whose last names begin with A through M will expire on December 31 and last names which begin with N through Z will expire on January 31. All third party providers and wind mitigation surveyors shall expire on July 31.

AUTHORITY NOTE: Promulgated in accordance with R.S. 40:1730.22(C) and (D).

HISTORICAL NOTE: Promulgated by the Department of Public Safety and Corrections, State Uniform Construction Code Council, LR 33:292 (February 2007), amended LR 35:2819 (December 2009), repromulgated LR 36:327 (February 2010), amended the Department of Public Safety and Corrections, Office of State Fire Marshal, State Uniform Construction Code Council, LR 44:1914 (October 2018).

§703. Classifications and Required Certifications for Municipal or Parish Building Code Enforcement Officers

A. General

1. In order to obtain a certificate of registration from the council for a particular classification, an individual must meet the following qualifications.

B. Definitions

Building Code Enforcement Officer (BCEO)—a person employed by a public entity who is primarily responsible for the overall inspection or enforcement of applicable building code requirements within the jurisdiction of the employer.

Building Official—the BCEO employed and charged by a public entity with the administration and enforcement of the Louisiana State Uniform Construction Code (LSUCC).

Inspector—a BCEO, who under the authority of the building official, is charged with the inspection of structures for compliance with his or her specialty classification(s) of the LSUCC.

Plans Examiner or Reviewer—a BCEO, who under the authority of the building official, is charged with the inspection of construction documents for compliance with his or her specialty classification(s) of the LSUCC.

Third-Party Provider (TPP)—any individual, entity, or an individual employed by an entity, contracted to act in the capacity of a BCEO by an authority having jurisdiction, a licensed contractor, or a homeowner who is exempted from the contractor licensing law under R.S. 37:2170.

Wind Mitigation Surveyor—the wind mitigation surveyor classification of third party provider is limited to performing a survey to complete the Louisiana Hurricane Loss Mitigation Survey Form. The Survey Form, LAC 37 Part XIII, Section 12721. Appendix A, is to be utilized by consumers applying for justifying discounts for features that comply with building codes, or, for installed mitigation improvements utilizing construction techniques demonstrated to reduce the amount of hurricane loss from a windstorm. This classification does not qualify applicant to perform building code inspections in compliance with the Louisiana State Uniform Construction Code Council (LSUCCC) or International Code Council (ICC) classifications for building inspectors.

C. BCEO Registration Classifications/Requirements

1. General Classifications

a. Building Official (BO)—requirements; possess a current ICC Certified Building Official certificate, a current ICC Master Code Professional Certificate, or be a Louisiana Licensed Architect, or Louisiana Licensed Engineer and have two years experience as an architect, engineer, inspector, plans examiner, contractor or superintendent of construction or any combination of these. General classifications are not restricted and may enforce all classified specialties of the LSUCC.

2. Specialty Classifications

a. Commercial Inspectors

i. Commercial Building Inspector Requirements—possess a current ICC Commercial Building Inspector, ICC Building Inspector, ICC Commercial Combination Inspector, or ICC Combination Inspector certificate.

ii. Commercial Electrical Inspector Requirements—possess a current ICC Commercial Electrical Inspector, ICC Electrical Inspector, ICC Commercial Combination Inspector, or ICC Combination Inspector certificate.

iii. Commercial Mechanical Inspector Requirements—possess a current ICC Commercial Mechanical Inspector, ICC Mechanical Inspector, ICC Commercial Combination Inspector, or ICC Combination Inspector certificate.

iv. Commercial Plumbing Inspector Requirements—possess a current ICC Commercial Plumbing Inspector, ICC Plumbing Inspector, ICC Commercial Combination Inspector, ICC Louisiana

Commercial Plumbing Inspector, or ICC Combination Inspector certificate.

v. Commercial Energy Inspector Requirements—shall be enforced by the Office of State Fire Marshal.

b. Commercial Plans Examiners or Reviewers

i. Building Plans Examiner Requirements—possess a current ICC Commercial Building Plans Examiner, or ICC Combination Plans Examiner certificate.

ii. Electrical Plans Examiner Requirements—possess a current ICC Commercial Electrical Plans Examiner, or ICC Combination Plans Examiner certificate.

iii. Mechanical Plans Examiner Requirements—possess a current ICC Commercial Mechanical Plans Examiner, or ICC Combination Plans Examiner certificate.

iv. Plumbing Plans Examiner Requirements—possess a current ICC Commercial Plumbing Plans Examiner, ICC Louisiana Plumbing Plan Examiner, or ICC Combination Plans Examiner certificate.

v. Commercial Energy Plans Examiner Requirements—shall be enforced by the Office of State Fire Marshal.

c. Residential Inspectors

i. Residential Building Inspector Requirements—possess a current ICC Residential Building Inspector, ICC Building Inspector, ICC Residential Combination Inspector, or ICC Combination Inspector certificate.

ii. Residential Electrical Inspector Requirements—possess a current ICC Residential Electrical Inspector, ICC Electrical Inspector, ICC Residential Combination Inspector, or ICC Combination Inspector certificate.

iii. Residential Mechanical Inspector Requirements—possess a current ICC Residential Mechanical Inspector, ICC Mechanical Inspector, ICC Residential Combination Inspector, or ICC Combination Inspector certificate.

iv. Residential Plumbing Inspector Requirements—possess a current ICC Residential Plumbing Inspector, ICC Plumbing Inspector, ICC Residential Combination Inspector, ICC Louisiana Residential Plumbing inspector, or ICC Combination Inspector certificate.

v. Residential Energy Inspector Requirements—possess a current ICC Residential Energy Inspector/Plans Examiner certificate.

d. Residential Plans Examiners or Reviewers

i Residential Plans Examiner – possess a current ICC Residential Plans Examiner certificate.

ii. Residential Energy Plans Examiner – possess a current ICC Residential Energy Inspector/Plans Examiner certificate.

AUTHORITY NOTE: Promulgated in accordance with R.S. 40:1730.34(B).

HISTORICAL NOTE: Promulgated by the Department of Public Safety and Corrections, Uniform Construction Code Council, LR 33:292 (February 2007), amended LR 33:1683 (August 2007), LR 34:93 (January 2008), amended by the Department of Public Safety and Corrections, Office of Management and Finance, Uniform Construction Code Council, LR 35:490 (March 2009), amended LR 35:2819 (December 2009), repromulgated 36:327 (February 2010).

§705. Third-Party Providers

A. General

1. A third party provider shall register with the council. Third party providers shall meet the requirements of the general or specialty classification(s) whichever applicable and as contracted with the parish or municipality. Furthermore, any individual employed by a third party provider who is also performing work for the parish or municipality, shall also be registered with this council.

B. Insurance. All third party providers shall carry at least $500,000 in professional liability insurance. Proof of valid and current insurance coverage must be provided to the council upon registration and renewal of registration in the form of an insurance certificate listing the Louisiana State Uniform Construction Code Council as the certificate holder.

1. Exceptions

a. Wind mitigation surveyors shall carry at least $300,000 in professional liability insurance.

C. Restrictions

1. Third party providers shall not provide plan review or inspections on projects of their own design and/or construction.

D. Code Enforcement Services for Non-Governmental Entities

1. Third party providers providing plan review services for non-governmental entities shall provide written copies of the plan review to the code enforcement officer of the municipality or parish prior to issuance of construction permits and in accordance with the administrative procedures of the authority having jurisdiction.

2. Where a third party provider provides services in a jurisdiction which has a building department, third party providers shall adhere to the permitting and inspection procedures of said jurisdiction in accordance with the administrative procedures of the authority having jurisdiction.

3. Third party providers providing inspection services for non-governmental entities shall provide written copies of the approved inspection reports to the code enforcement officer of the jurisdiction prior to the issuance of the certificate of occupancy in accordance with the

administrative procedures of the authority having jurisdiction.

E. A wind mitigation surveyor classification of third party provider may specialize as a wind mitigation surveyor upon meeting the following qualifications:

1. possession of a home inspector license through the Louisiana State Board of Home Inspectors; and

2. possession of a certificate of completion for the 2006 IRC Hurricane Resistant Residential Construction Program, or other equivalent program approved by the LSUCCC.

AUTHORITY NOTE: Promulgated in accordance with R.S. 40:1730.22(C) and (D).

HISTORICAL NOTE: Promulgated by the Department of Public Safety and Corrections, State Uniform Construction Code Council, LR 33:292 (February 2007), amended LR 33:2462 (November 2007), amended by the Department of Public Safety and Corrections, Office of Management and Finance, Uniform Construction Code Council, LR 35:491 (March 2009), amended by the Department of Public Safety and Corrections, State Uniform Construction Code Council, LR 35:2820 (December 2009), repromulgated LR 36:328 (February 2010).

§707. Continuing Education Requirements

A. Prior to annual renewal of the certificate of registration as required by this Chapter, all building code enforcement officers and third-party providers, except Louisiana licensed architects or engineers as allowed by R.S. 40:1730.24(B), shall be registered with the International Code Council and obtain the continuing education units required for that registry.

B. Building code enforcement officers holding provisional certificates of registration and prior to certification and registration with the International Code Council shall provide evidence of one continuing education unit relating to construction code enforcement for the preceding year.

C. Prior to annual renewal of the certificate of registration, Louisiana licensed architects and engineers exempted by R.S. 40:1730.24(B) shall be licensed in the state of Louisiana and obtain the continuing education units required for that licensure.

AUTHORITY NOTE: Promulgated in accordance with R.S. 40:1730.22(C) and (D) and R.S. 40:1730.38

HISTORICAL NOTE: Promulgated by the Department of Public Safety and Corrections, State Uniform Construction Code Council, LR 33:2666 (December 2007), amended LR 35:2821 (December 2009), repromulgated LR 36:328 (February 2010).

Chapter 9. Temporary Exemption to Certification Requirement

§901. Employment after January 1, 2007

A. Upon employment or if currently employed and promoted to a specific certification by a parish, municipality, or other political subdivision, an individual must be granted a provisional "F" certificate of registration without certification by a recognized code organization or testing agency, provided that such individual is under the supervision of a registered code enforcement officer who is certified by the International Code Council. Provisional "F" certifications shall be as follows.

1. A provisional "F" certification shall be valid for 12 months from date of hire or promotion.

2. A provisional "F" certification for veterans shall be valid for 24 months from date of hire or promotion.

AUTHORITY NOTE: Promulgated in accordance with R.S. 40:1730.22(C) and (D).

HISTORICAL NOTE: Promulgated by the Department of Public Safety and Corrections, State Uniform Construction Code Council, LR 33:293 (February 2007), amended LR 35:2821 (December 2009), repromulgated LR 36:329 (February 2010), amended LR 40:2611 (December 2014), amended LR 46:191 (February 2020).

§903. Employment prior to January 1, 2007

A. Certificates of registration may be issued without certification by a recognized code organization or testing agency to building code enforcement officers already employed in code enforcement on January 1, 2007, only for the position and locality held at the time of registration. This registration is valid for three years for building officials and six months for building inspectors and plans reviewers. Additionally, inspectors and plan reviews who were employed by an authority having jurisdiction before July 1, 2006, and remain employed by that authority having jurisdiction, an additional 30 month provisional certificate or registration may be granted provided the individual can demonstrate an annual minimum of three continuing education units for a core discipline as required in §703. Thereafter, anyone renewing this certificate of registration shall satisfy the certification requirement(s) as set forth in §703.

B. The building code enforcement officers designated in Paragraph A above shall have until January 1, 2012, to satisfy the certification requirements as set forth in §703 of this Part. Officials availing themselves of this provision shall obtain the required continuing education units and have attempted at least one International Code Council certification exam by January 1, 2010. Failure to do either shall result in the revocation of that official's provisional certificate of registration.

AUTHORITY NOTE: Promulgated in accordance with R.S. 40:1730.22(C) and (D).

HISTORICAL NOTE: Promulgated by the Department of Public Safety and Corrections, State Uniform Construction Code Council, LR 33:293 (February 2007), amended LR 35:2821 (December 2009), repromulgated LR 36:329 (February 2010).

§905. Grandfathering for Employment of at Least 10 Years on January 1, 2007

A. Certificates of Registration may be issued without certification by a recognized code organization or testing agency to building code enforcement officers who have been employed in building code enforcement for at least 10 years on January 1, 2007, only for the position and locality held at the time of registration. Building code enforcement officers who are registered pursuant to this paragraph shall provide

notarized verification of employment from the payroll agent of their employing authority having jurisdiction, and must comply with all continuing education requirements established by the council.

1. Building code enforcement officers currently provisionally registered with the Louisiana State Uniform Construction Code Council and meeting the 10-year employment requirement in Subsection A above shall have until December 31, 2010 to renew registration under the provisions of R.S. 40:1730.35 C(2) and this Section.

2. Building code enforcement officers not currently registered with the Louisiana State Uniform Construction Code Council and referenced in Subsection A above shall have until April 15, 2010 to satisfy the registration requirements set forth in §701 of this Part and this Section, and have until December 31, 2010 to meet the continuing education requirements of their provisional registration.

AUTHORITY NOTE: Promulgated in accordance with R.S. 40:1730.22(C) and (D).

HISTORICAL NOTE: Promulgated by the Department of Public Safety and Corrections, Uniform Construction Code Council, LR 36:1271 (June 2010).

Chapter 11. Disciplinary Proceedings

§1101. General

A. The council shall have the authority to suspend, revoke or deny renewal of Certificates of Registration upon any violation of R.S. 40:1730.21 et seq., after notice and proper hearing.

AUTHORITY NOTE: Promulgated in accordance with R.S. 40:1730.35(E).

HISTORICAL NOTE: Promulgated by the Department of Public Safety and Corrections, State Uniform Construction Code Council, LR 33:293 (February 2007).

§1102. Informal Proceedings

A. Notice. If the council receives written information indicating that a person holding a Certificate of Registration (registrant) is violating or has violated any provision of R.S. 40:1730.21 et seq., or this Part, the council, after an informal investigation, by the council administrator or his/her designee, shall notify the registrant, in writing, of the findings of the informal investigation by the council administrator. The council administrator is authorized to conduct the informal investigation by telephone or site visit as deemed necessary by the council administrator. Furthermore, for complaints involving an immediate safety threat or dangerous condition, the council administrator shall notify, in writing, the local building official of the complaint. After presentation of a report by the council administrator, the council may, in writing, order the registrant to immediately cease the conduct or violation.

B. Response. The registrant after written informal notice from the council, shall respond in writing to the council's informal notice within 21 days of receipt by providing the council with a written statement containing any information related to the allegations of the informal notice which would show compliance with all requirements for retention or renewal of his/her certificate of registration. In lieu of providing a written statement, the registrant may request, in writing to the council administrator, an informal conference with the council chair, code enforcement advisory committee chair, council administrator, and legal counsel. In the event that a resolution to the matter is not accomplished during the informal procedures, the council administrator shall forward a report to the council for initiation of the formal procedures.

AUTHORITY NOTE: Promulgated in accordance with R.S. 40:1730.35(E).

HISTORICAL NOTE: Promulgated by the Department of Public Safety and Corrections, State Uniform Construction Code Council, LR 33:293 (February 2007), amended LR 34:1632 (August 2008).

§1103. Formal Proceedings

A. Complaint. In the event that the matter is not resolved during the informal proceedings, the council shall file a formal complaint which then shall be forwarded to the registrant, via certified mail, to the address on file with the council.

B. Hearing. No hearing shall be conducted prior to 20 business days following the filing of the formal complaint.

AUTHORITY NOTE: Promulgated in accordance with R.S. 40:1730.35(E).

HISTORICAL NOTE: Promulgated by the Department of Public Safety and Corrections, State Uniform Construction Code Council, LR 33:293 (February 2007).

§1105. Procedures

A. Hearings. All hearings conducted before the council or a designated committee shall be in accordance with the Administrative Procedure Act.

B. Notice. The hearing notice shall include:

1. a statement of the time, place and nature of the hearing;

2. a statement of the legal authority under which the hearing is to be had;

3. a reference to the particular sections of the statutes and rules involved;

4. a short plain statement of the matters asserted.

C. Opportunity shall be afforded to all parties to respond and present evidence on all issues of fact involved and argument on all issues of law and policy involved and to conduct such cross examination as may be required for a full and true disclosure of the facts.

D. Unless precluded by law, informal disposition may be made of any case of adjudication by stipulation, agreed settlement, consent order or default.

AUTHORITY NOTE: Promulgated in accordance with R.S. 40:1730.35(E).

HISTORICAL NOTE: Promulgated by the Department of Public Safety and Corrections, State Uniform Construction Code Council, LR 33:293 (February 2007).

§1107. Decisions and Orders

A. A final decision or order adverse to a party in an adjudication proceeding shall be in writing. A final decision shall include findings of fact and conclusions of law. Findings of fact, if set forth in statutory language, shall be accompanied by a concise and explicit statement of the underlying facts supporting the findings. Parties shall be notified by mail of the decision or order. A copy of the decision or order shall be sent via certified mail forthwith to each party and, if applicable, to his attorney of record. The parties by written stipulation may waive compliance with this Section. The council, in the event there is no contest, may eliminate compliance with this Section.

AUTHORITY NOTE: Promulgated in accordance with R.S. 40:1730.35(E).

HISTORICAL NOTE: Promulgated by the Department of Public Safety and Corrections, State Uniform Construction Code Council, LR 33:294 (February 2007).

§1109. Rehearings

A. A decision or order in a case of adjudication are subject to rehearing, reopening, or reconsideration by the council, within 10 days from the date of its entry. The grounds for such action shall be either that:

1. the decision or order is clearly contrary to the law and the evidence;

2. the party has discovered since the hearing evidence important to the issues which he could not have with due diligence obtained before or during the hearing;

3. there is a showing that issues not previously considered ought to be examined in order properly to dispose of the matter; or

4. there is other good ground for further consideration of the issues and the evidence in the public interest.

B. The petition of a party for rehearing, reconsideration, or review, and the order of the council granting it, shall set forth the grounds which justify such action. On reconsideration, reopening, or rehearing, the matter may be heard by the council, or it may be referred to a subordinate committee. The hearing shall be confined to those grounds upon which the reconsideration, reopening, or rehearing was ordered. If an application for rehearing shall be timely filed, the period within which judicial review, under the applicable statute, must be sought, shall run from the final disposition of such application.

AUTHORITY NOTE: Promulgated in accordance with R.S. 40:1730.35(E).

HISTORICAL NOTE: Promulgated by the Department of Public Safety and Corrections, State Uniform Construction Code Council, LR 33:294 (February 2007).

§1111. Judicial Review of Adjudication

A. A registrant who is aggrieved by a final decision or order in an adjudication proceeding is entitled to judicial review whether or not he has applied to the agency for rehearing, without limiting, however, utilization of or the scope of judicial review available under other means of review, redress, relief, or trial de novo provided by law. A preliminary, procedural, or intermediate action or ruling is immediately reviewable if review of the final council decision would not provide an adequate remedy and would inflict irreparable injury.

B. Proceedings for review may be instituted by filing a petition in the District Court of East Baton Rouge Parish within 30 days after mailing of notice of the final decision or, if a rehearing is requested, within 30 days after the decision thereon. Copies of the petition shall be served upon the council and all parties of record.

C. The filing of the petition does not itself stay enforcement of the council decision. The council may grant, or the reviewing court may order, a stay ex parte upon appropriate terms, relative to professions and occupations. The court may require that the stay be granted in accordance with the local rules of the reviewing court pertaining to injunctive relief and the issuance of temporary restraining orders.

D. Within 30 days after the service of the petition, or within further time allowed by the court, the council shall transmit to the reviewing court the original or a certified copy of the entire record of the proceeding under review. By stipulation of all parties to the review proceedings, the record may be shortened. A party unreasonably refusing to stipulate to limit the record may be taxed by the court for the additional costs. The court may require or permit subsequent corrections or additions to the record.

E. If, before the date set for hearing, application is made to the court for leave to present additional evidence, and it is shown to the satisfaction of the court that the additional evidence is material and that there were good reasons for failure to present it in the proceeding before the council, the court may order that the additional evidence be taken before the council upon conditions determined by the court. The council may modify its findings and decision by reason of the additional evidence and shall file that evidence and any modifications, new findings, or decisions with the reviewing court.

F. The review shall be conducted by the court without a jury and shall be confined to the record. In cases of alleged irregularities in procedure before the council, not shown in the record, proof thereon may be taken in the court. The court, upon request, shall hear oral argument and receive written briefs.

G. The court may affirm the decision of the council or remand the case for further proceedings. The court may reverse or modify the decision if substantial rights of the appellant have been prejudiced because the administrative findings, inferences, conclusions, or decisions are:

1. in violation of constitutional or statutory provisions;

2. in excess of the statutory authority of the agency;

3. made upon unlawful procedure;

4. affected by other error of law;

5. arbitrary or capricious or characterized by abuse of discretion or clearly unwarranted exercise of discretion; or

6. not supported and sustainable by a preponderance of evidence as determined by the reviewing court. In the application of this rule, the court shall make its own determination and conclusions of fact by a preponderance of evidence based upon its own evaluation of the record reviewed in its entirety upon judicial review. In the application of the rule, where the council has the opportunity to judge the credibility of witnesses by first-hand observation of demeanor on the witness stand and the reviewing court does not, due regard shall be given to the agency's determination of credibility issues.

AUTHORITY NOTE: Promulgated in accordance with R.S. 40:1730.35(E).

HISTORICAL NOTE: Promulgated by the Department of Public Safety and Corrections, State Uniform Construction Code Council, LR 33:294 (February 2007).

Chapter 13. Code Enforcement Violations

§1301. General

A. If the council has reason to believe that a person or authority having jurisdiction is violating or intends to violate a provision of this Part, it may order the person or authority having jurisdiction immediately to refrain from the conduct or to immediately start performing some specific act. The council may apply to the district court of the parish for an injunction restraining the person or authority having jurisdiction from the conduct or for a mandamus to compel the performance of a duty. The court may issue a temporary injunction ex parte not to exceed 10 days and upon notice a full hearing may issue other orders in the matter it considers proper. No bond is required of the council by the court as a condition to the issuance of an injunction or other order.

AUTHORITY NOTE: Promulgated in accordance with R.S. 40:1730.22(C) and (D) and R.S. 40:1730.37.

HISTORICAL NOTE: Promulgated by the Department of Public Safety and Corrections, State Uniform Construction Code Council, LR 33:2666 (December 2007).

§1303. Informal Proceedings

A. If the council receives written information indicating that a person or authority having jurisdiction is violating or has violated any provision of R.S. 40:1730.21 et seq., or this Part, the council, after an investigation, may, in writing, order the person or authority having jurisdiction to immediately refrain from the conduct or violation or to immediately start performing some specific act.

B. Response. The person or authority having jurisdiction shall respond in writing to the council's informal notice within 10 days of receipt by providing the council with a written statement containing any information related to the allegations of the informal notice which would show compliance with state law or this Part.

AUTHORITY NOTE: Promulgated in accordance with R.S. 40:1730.22(C) and (D).

HISTORICAL NOTE: Promulgated by the Department of Public Safety and Corrections, State Uniform Construction Code Council, LR 33:2667 (December 2007).

§1305. Investigation Procedures

A. In investigating a complaint, the following measures shall be observed by the council.

1. Complainant must file a written complaint with the council. The complaint shall be made on the form provided by the council.

2. The completed complaint form shall be mailed, faxed or hand delivered to the council administrator.

3. Once the complaint is filed with the council administrator, a file on the matter shall be opened and maintained by the administrator. A separate complaint file shall be kept on each complaint.

4. The council administrator shall oversee the investigation. The investigation may be conducted by the council administrator or his designee.

5. Upon completion of the investigation, the council administrator shall prepare a report to the council's Code Enforcement Advisory Committee.

6. The Code Enforcement Advisory Committee shall review the file and make a determination as to a course of action.

7. Once the Code Enforcement Advisory Committee makes their determination then they send their recommendation to the council to be heard at the earliest available council meeting.

8. The council shall consider the Code Enforcement Advisory Committee's recommendation then vote on a course of action.

AUTHORITY NOTE: Promulgated in accordance with R.S. 40:1730.22(C) and (D).

HISTORICAL NOTE: Promulgated by the Department of Public Safety and Corrections, State Uniform Construction Code Council, LR 33:2667 (December 2007).

§1307. Judicial Proceedings

A. Injunction or Mandamus. In the event that the matter is not resolved during the informal proceedings, the council may file a petition for injunction or seek a writ of mandamus with the district court having jurisdiction.

AUTHORITY NOTE: Promulgated in accordance with R.S. 40:1730.22(C) and (D) and R.S. 40:1730.37.

HISTORICAL NOTE: Promulgated by the Department of Public Safety and Corrections, State Uniform Construction Code Council, LR 33:2667 (December 2007).

Title 55
PUBLIC SAFETY
Part VII. Alcohol and Tobacco Control
Subpart 1. Beer and Liquor

Chapter 1. Beer Cash Regulations

§101. Definitions

A. For use in these regulations, the following terms are defined.

Beer—(as used in these regulations) beer, porter, ale, or any malt beverage obtained by alcoholic fermentation of an infusion, or concoction of barley, or other grain, malt and hops in water.

Cash Basis Order—the order issued by the commissioner after considering violations of the Beer Cash Law, which requires that a specified retailer must pay cash (currency and/or coin) for beer.

Cash Payment Basis—a retail dealer is required to pay for beer with currency and/or coin.

Cash Sale—(as used in R.S. 26:741 and in this regulation) the sale of beer for a consideration passing simultaneously upon delivery of merchandise, which consideration shall be currency or coin, or check as provided herein, or, bank certified items of cashier's check, certified check, or bank money order.

Cash Sales of Beer Law or *Beer Cash Law*—the provisions of Act No. 466 of 1948, the current reference being 1950 Louisiana R.S. 26:741.

Certified Payment Basis—bank certified items which a retail dealer may use in payment for beer, as, cashier's check, certified check, or bank money order.

Check—an order in writing by a beer permittee, written in accordance with the rules of the bank on which it is drawn, ordering the bank to pay a certain sum of money from the account of said permittee and to the order of a payee wholesaler.

Commissioner—the Commissioner of Alcoholic Beverage Control for the State of Louisiana, or his agent.

Documentary Permit—the document issued by the collector of revenue to show that the application to engage in business as a beer dealer is approved, which document will show to whom the permit was issued (the permittee), the address location of the business, kind of permit, the year for which issued and date of issuance.

Hearing—the procedural matter of the commissioner setting and conducting a hearing to determine findings on violations of the Beer Cash Law by retailers and wholesalers.

Hearing Officer—the person in charge of the hearing on violations of the Beer Cash Law for the commissioner.

Notice of Hearing—the commissioner's written notice sent to dealers containing information of a hearing to be held on violations, which notice shall specify place, date and time.

Permit Suspension Order—the order issued by the commissioner suspending the privilege license of doing business as a beer dealer after a hearing.

Retail Dealer or *Retailer*—every person who sells, offers for sale, exposes for sale, or has in possession for sale and distribution, beer or malt beverages in any quantity to person other than to wholesaler or other retailers.

Uncollected Funds—bank terminology where items are accepted by the bank as a deposit for collection to be credited to the account of the depositor after collection, and which collection has not cleared by the bank.

Wholesale Dealer or *Wholesaler*—every person who sells, or offers for sale beer to other wholesale dealers, or to retail dealers for resale within the state, or to any person for delivery beyond the borders of the state.

AUTHORITY NOTE: Promulgated in accordance with R.S. 26:32 and R.S. 26:793.

HISTORICAL NOTE: Adopted by the Department of Public Safety, Office of Alcoholic Beverage Control, 1948, filed at the Office of the State Register, 1974.

§103. Credit Sale of Beer Prohibited—Retail Dealer Checks

A. The sale of beer by a wholesale dealer to a retail dealer shall be made only for cash. Any maneuver, device, or shift of any kind by either wholesaler or retailer, whereby credit is extended or obtained, is a violation of the Beer Cash Law.

B. Only retail beer dealers operating under a documentary permit, issued to them by the collector of revenue, may give a check for the payment of beer, and then only when such check is given and accepted in accordance with these regulations.

C. A check given by a retail dealer in payment for beer shall be considered a cash consideration only when the following conditions are met.

1. The check is drawn on the account of the retail dealer making the purchase.

2. The check is given not later than simultaneously upon delivery of the beer.

3. The check is dated not later than the date of delivery of beer.

4. The check is for an amount not exceeding the total invoice price.

5. The check is paid by the drawee bank when first presented for payment.

D. Retail dealer checks accepted by a wholesale dealer may not be surrendered back to the retail dealer for cash before first presenting the check to the bank for payment in accordance with these regulations.

E. An applicant for a retail beer permit commencing a new business, or taking over a going business, may not give a check in payment for beer until the documentary permit has been issued by the Collector of Revenue; the applicant must meet payment with cash, or, with certified payment.

F. A check returned unpaid because of being drawn against uncollected funds is a violation of the Beer Cash Law; the dealer issuing the check may not claim the reason for the check being unpaid as a defense for the violation.

AUTHORITY NOTE: Promulgated in accordance with R.S. 26:32 and R.S. 26:793.

HISTORICAL NOTE: Adopted by the Department of Public Safety, Office of Alcoholic Beverage Control, 1948, filed at the Office of the State Register, 1974.

§105. Wholesalers to Deposit Retailer Checks Currently—Records

A. All checks accepted by the wholesale dealers from retail beer dealers shall be deposited or presented for payment by the wholesale dealer not later than the next banking day following the receipt of the check from the retail dealer.

B. Failure to timely deposit or present for payment any check shall be considered a violation of R.S. 26:741 by the wholesaler. The wholesale dealer shall record the date and the manner in which he presents the check to the bank for payment, whether by a listed deposit, or at the paying teller's window for cash.

C.1. Wholesale beer dealers shall maintain all records pertaining to checks accepted from retail dealers and bank deposits of such checks for a period of two years, and shall hold all books, records and memoranda pertaining to those checks returned unpaid by the bank; such records shall be held for examination and review by the commissioner.

2. Wholesale beer records of collections and banking for the sale of beer shall be designed to show the wholesale beer distributive business separate from any other lines of business.

AUTHORITY NOTE: Promulgated in accordance with R.S. 26:32 and R.S. 26:793.

HISTORICAL NOTE: Adopted by the Department of Public Safety, Office of Alcoholic Beverage Control, 1948, filed at the Office of the State Register, 1974.

§107. Reports by Wholesalers

A. Whenever a check accepted by a wholesaler from a retailer is not honored by the drawee bank for any reason whatsoever, the wholesaler shall furnish the commissioner a written notice of this failure on a form prescribed by the commissioner, which notice shall be mailed to the commissioner not later than the next day after receipt of notice that payment of check has been refused (Form BCL-3).

B. All wholesale dealers shall file with the commissioner a monthly report on forms prescribed by the commissioner of all checks accepted from retailers which were returned unpaid by the drawee bank for any reason; the report is to cover transactions on beer sold during the calendar month, and shall be filed not later than the twentieth day following the close of each month (Form BCL-4).

C. The reports required in §107.A and B shall contain the information on each item as specified in the form supplied by the commissioner, as well as any additional information requested of the wholesaler by the commissioner.

D. Wholesale dealers shall report to the commissioner any incident where a retail dealer defers payment for beer by a means other than the issuance of an insufficient check, such incident shall be submitted to the commissioner as a written report setting out all information to describe the transaction and the means used by the retail dealer to defer payment for beer.

AUTHORITY NOTE: Promulgated in accordance with R.S. 26:32 and R.S. 26:793.

HISTORICAL NOTE: Adopted by the Department of Public Safety, Office of Alcoholic Beverage Control, 1948, filed at the Office of the State Register, 1974.

§109. Wholesale Dealer Violations—Notices, Hearings and Findings

A. Any of the following when committed by a wholesale dealer shall be considered a violation of R.S. 26:741, the Cash Sales of Beer Law:

1. to use any maneuver, device or shift of any kind whereby credit is extended or payment is delayed for beer sold to a retailer;

2. failure to exact the full cash consideration on the sale of beer not later than at the time of delivery of beer to the retail dealer;

3. the acceptance of a check other than a check of a retail dealer operating under a documentary permit issued by the collector of revenue;

4. failure to exact cash payment or certified payment for beer from an applicant for a retail beer permit whose documentary permit has not been issued;

5. failure to deposit checks of retail dealers as required by §105 of these regulations;

6. failure to file with the commissioner within the prescribed time and in the proper form any reports or notices provided in these regulations;

7. selling of beer other than for cash to a retail dealer who is operating under the commissioner's cash basis order;

8. making a sale of beer to a retail dealer during the period the retail dealer is under the commissioner's permit suspension order;

9. failure to satisfactorily answer notice to appear at hearings on violations, or, failure to furnish requested information at hearing.

B. Whenever the commissioner has reason to believe a violation of R.S. 26:741 or these regulations has been committed by a wholesale dealer, he shall determine, according to the available records, if it is the first violation, or if prior violations have occurred, and proceed according to the following.

1. First Violation. The commissioner shall send a warning notice to the wholesale dealer.

2. Second Violation

a. The commissioner shall send a notice to the wholesale dealer that the records show that since the first violation was found, the wholesaler has committed another violation and that a hearing will be held at a specified time and place.

b. If, at the hearing on the second violation, the commissioner is satisfied that the violation did occur within one year of the first violation, then the permit of the violator may be suspended for a period of two days exclusive of Sundays, election days and legal holidays and the violator may be fined not less than $50 but not more than $500.

3. Third Violation

a. The commissioner shall send a notice to the wholesale dealer that the records show that since the second violation was found, the wholesaler has committed another violation and that a hearing will be held at a specified time and place.

b. If, at the hearing on the third violation, the commissioner is satisfied that the violation did occur within one year of the first violation, then the violator may be suspended for a period of five days, exclusive of Sundays, election days and legal holidays and the violator may be fined not less than $250 but not more than $1,000.

4. Fourth Violation

a. The commissioner shall send a notice to the wholesale dealer that the records show that since the third violation was found, the wholesaler has committed another violation and that a hearing will be held at a specified time and place.

b. If, at the hearing on the fourth violation, the commissioner is satisfied that the violation did occur within one year of the first violation, then the violator may be suspended for a period of 10 days, exclusive of Sundays, election days and legal holidays and the violator may be fined not less than $500 but not more than $2,500.

C. When there are violations found subsequent to the fourth violation, the commissioner will likewise set hearing as in the third and fourth violations, and if, after the hearing, the commissioner is satisfied that the violation did occur within one year of the first violation, then the violator may be suspended for a period of 90 days, or the revocation of the permit holder may be ordered, and, in addition to either, the violator may be fined not less than $3,000 but not more than $10,000.

AUTHORITY NOTE: Promulgated in accordance with R.S. 26:741.

HISTORICAL NOTE: Adopted by the Board of Alcoholic Beverage Control, 1948, amended by the Department of Public Safety and Corrections, Office of Alcoholic Beverage Control, LR 19:1175 (September 1993).

§111. Retail Dealer Violations—Notices, Hearings and Findings

A. Any of the following, when committed by a retail dealer, shall be considered a violation of R.S. 26:741, the Beer Cash Law:

1. failure to pay the full cash consideration for the purchase of beer not later than at the time of delivery of said beer, or, to use any maneuver, device, or shift of any kind whereby credit is obtained;

2. making payment to a wholesaler for beer with a check which does not comply with the requirements of §103 of these regulations;

3. to buy, borrow or otherwise obtain beer by any means while under a permit suspension order;

4. to sell, loan, give or otherwise supply beer on any basis to a retail dealer who is under a permit suspension order;

5. to violate the conditions of a cash basis order, or, to violate conditions of a permit suspension order.

B. Whenever the commissioner has reason to believe that a violation of R.S. 26:741 or these regulations has been committed by a retail dealer, he shall determine, according to available records, if it is the first violation, or, if prior violations have occurred, and, proceed according to the following.

1. First Violation. The commissioner shall send a warning notice to the retailer.

2. Second Violation

a. On the second recorded instance of a violation, after the notice of the first violation to a retail dealer, the commissioner shall review the file and records of violations of the retail dealer to determine a finding.

b. If, after such review, the commissioner is satisfied that the violation did occur within one year of the first violation, then, he shall rule that the retail dealer must pay cash for beer for a period of three months, to begin the date so specified in the cash basis order.

c. If the cash basis order is issued on the retailer, the commissioner shall rule to require wholesale dealers to accept only cash from the retailer for the payment of beer sold during the period of the cash basis order.

3. Third Violation

a. The commissioner shall send a notice to the retail dealer that the records show that since the second violation was found, the retailer has committed another violation and that a hearing will be held at a specified time and place.

b. If, at the hearing on the third violation, the commissioner is satisfied that the violation did occur within one year of the first violation, then the permit of the violator shall be suspended for a three-day period, exclusive of Sundays, election days and holidays.

c. In addition to the suspension of the permit, the commissioner shall rule that the retail dealer must pay cash for beer for a period of six months, which rule, shall require wholesale dealers to accept only cash from the retailer during the period of the cash basis order.

4. Fourth Violation

a. The commissioner shall send a notice to the retail dealer that the records show that since the third violation was found, the retail dealer has committed another violation and that a hearing will be held at a specified time and place.

b. If at the hearing on the fourth violation the commissioner is satisfied that the violation did occur within two years of the first violation, then the permit of the violator shall be suspended for a period of not less than 10 days nor more than 30 days.

c. In addition to the suspension of the permit, the commissioner shall rule that the retail dealer must pay cash for beer for a period of one year, which rule shall become effective on the finding of the violation; and the commissioner shall rule to require wholesale dealers to accept only cash from retail dealer during the period of the cash basis order.

C. When violators found subsequent to the fourth violation, the commissioner likewise set hearings as in the third and fourth violations, and if after the hearing the commissioner is satisfied that the violation did occur within one year of the last previous violation, then the permit of the retail violator shall be suspended for a period of not less than 10 days nor more than 30 days, and shall be required to pay cash for the purchase of beer for one year.

D. If the commissioner determines at the hearing on the fourth violation, or, any subsequent hearing, that an aggravated condition occurred with that violation, an alternative penalty may be invoked by the commissioner to include permit suspension for a period of 90 days, or the revocation of the permit of the violator.

AUTHORITY NOTE: Promulgated in accordance with R.S. 26:32 and R.S. 26:793.

HISTORICAL NOTE: Adopted by the Department of Public Safety, Office of Alcoholic Beverage Control, 1948, filed at the Office of the State Register, 1974.

§113. Notice of Violations and Hearings—Retailers and Wholesalers

A. The commissioner's notice to dealers of violations and/or hearings will be directed to the dealer at the address shown on the dealer's permit and may be sent by mail, or, in writing to be delivered to the dealer by the commissioner's agent.

B. The notice shall be marked to show whether it is the first violation, second violation, third violation, or subsequent violation, as the case may be and if there is a hearing, the notice shall contain information pertinent to the hearing, as, place, date and time.

AUTHORITY NOTE: Promulgated in accordance with R.S. 26:32 and R.S. 26:793.

HISTORICAL NOTE: Adopted by the Department of Public Safety, Office of Alcoholic Beverage Control, 1948, filed at the Office of the State Register, 1974.

§115. Attendance at Hearings—Retailers and Wholesalers

A. Dealers shall be sent a notice of hearings on violations which involve the suspension of his permit so as to afford the dealer an opportunity to be present and to offer any evidence or argument on his behalf in connection with those violations.

B. If the dealers do not attend the hearing, then the hearing officer shall proceed with the hearing; if his findings affect the status of the permit of the dealer, the hearing officer shall send a written notice of such findings to the dealer.

AUTHORITY NOTE: Promulgated in accordance with R.S. 26:32 and R.S. 26:793.

HISTORICAL NOTE: Adopted by the Department of Public Safety, Office of Alcoholic Beverage Control, 1948, filed at the Office of the State Register, 1974.

§117. Effect of Suspension of License and Cash Rule

A. The license of any wholesale beer dealer, who continues to engage in the business subject of his beer license while under suspension for violation of the Cash Sales of Beer Law, shall be suspended for a period of 30 days, or may be revoked as a violation of the Beer Cash Law after notice and hearing.

B. The license of any retail beer dealer, who continues to engage in the business subject of his beer license to any extent while under suspension for a violation of the Cash Sales of Beer Law, shall be suspended for a period of 90 days, or, may be revoked as a violation of the Beer Cash Law after notice and hearing.

C. When a retail dealer is a multiple holder of retail beer permits, and said retailer is found to have committed a violation of the Beer Cash Law, and the hearing officer issues the cash payment order, such rule shall apply to all separate places of business operated by the retail dealer as of the date of the cash rule.

AUTHORITY NOTE: Promulgated in accordance with R.S. 26:32 and R.S. 26:793.

HISTORICAL NOTE: Adopted by the Department of Public Safety, Office of Alcoholic Beverage Control, 1948, filed at the Office of the State Register, 1974.

§119. Commissioner's Assertion of Intention of These Regulations

A. These regulations are issued to implement R.S. 26:741, the Beer Cash Law, to provide an administrative vehicle by which effective administration may be accomplished so as to give clarity and understanding to those provisions.

B. It is the intention of these regulations to give consideration to the desired effect in the conduct of the beer distributive industry so as to contribute to the orderliness of that industry; to give force and clarity to the necessity of submitting applications for the privilege license as a beer dealer; to further point out the necessity of the documentary permit.

C. Special attention is directed to wholesale dealers from whom state and local beer taxes are collected, to point to their responsibility under these regulations, and that such responsibility may not be disregarded; to point out that where the facts show an apparent disregard for the spirit and purpose of these regulations, that even though is not a specific violation, the dealer will be cited by the commissioner for such condition.

AUTHORITY NOTE: Promulgated in accordance with R.S. 26:32, R.S. 26:741 and R.S. 26:793.

HISTORICAL NOTE: Adopted by the Department of Public Safety, Office of Alcoholic Beverage Control, 1948, filed at the Office of the State Register, 1974.

Chapter 3. Liquor Credit Regulations

§301. Regulation I—Liquor Credit Law

A. Every delivery of liquor to retail dealers shall be accompanied by an invoice of sale showing the name of the retail dealer, his trade name and permit number, and the date of the invoice which shall be the date of actual delivery.

B. Manufacturers and wholesale dealers shall on each Monday morning mail to the commissioner, on a form prescribed by him, delinquent reports containing all of the information called for on said report.

C. The dealers required to be reported as delinquent are those whose accounts were delinquent as of 7 p.m. Sunday preceding the date of the report.

D. Delinquent retail dealers who pay their deficiency in full by Monday mornings are not to be included on the delinquent reports of that day.

E. Delinquents are to be reported each Monday morning until their accounts have been paid in full.

F. When collections are made from delinquent retail dealers before the expiration of their credit period, but too late to be processed on the wholesaler's or manufacturer's books and included on their delinquent report, provided an affidavit, on a sample form to be furnished by the commissioners, is executed by the person receiving the payment, which affidavit is to be retained by the wholesaler or manufacturer.

G. Delinquent reports shall name all outlets and package houses owned or operated by the delinquent retail dealer.

H. When manufacturers and wholesale dealers are not open for business on Mondays, reports shall be submitted on the last working day prior thereto, unless notified to the contrary by the commissioner.

I. Triplicate copies of delinquent reports are to be made by manufacturers and wholesale dealers, the original of which is to be sent to the commissioner at Baton Rouge, one to the delinquent retail dealer and one to be retained by the wholesale dealer or manufacturer.

J. No sale of liquor, except for cash (currency or silver), shall be made to a delinquent retail dealer on or after the date a list containing his name has been published by the commissioner.

K. A retail dealer shall remain in default of credit until a list on which his name does not appear has been published by the commissioner, or manufacturers and wholesale dealers are notified to the contrary by the commissioner.

L. Any liquor salesman and/or any wholesale liquor dealer who, either individually or collectively, coerces, or conspires with, any retail liquor dealer to purchase alcoholic beverages on any terms other than those permitted under R.S. 26:159 and these regulations shall subject said liquor salesman, and/or said retail or wholesale liquor dealer to a hearing with possible suspension of permit or permits for violation of Title 26 of the Revised Statutes of 1950, as amended, and these regulations.

M. Any permittee who remains in default over a period of 30 days, may be called to a hearing by the commissioner to either suspend his permit or be placed on a permanent cash basis, or both; and in the event the commissioner places any permittee on a cash basis, all wholesale dealers shall be notified thereof in writing, and after the receipt of such notice, no dealer shall sell, offer to sell, or deliver any alcoholic beverages for any consideration other than cash until otherwise advised in writing by the commissioner.

N. Any permittee placed on a permanent cash basis by order of the commissioner may request recision of the order by petitioning the commissioner in writing for a rehearing and the commissioner may rescind his order upon the permittee satisfying the commissioner of his financial responsibility to carry on his business on a credit basis.

AUTHORITY NOTE: Promulgated in accordance with R.S. 26:32.

HISTORICAL NOTE: Adopted by the Department of Public Safety, Office of Alcoholic Beverage Control, 1948, filed at the Office of the State Register, 1974.

§303. Regulation II—Adulterated Beverages

A. As set forth in R.S. 26:150(B)(3), no dealer shall adulterate, water, or in any manner change the original contents of any container of regulated beverages nor possess any so adulterated, watered or changed. The provisions of

this rule shall not apply to duly licensed manufacturers engaged in the blending or rectifying of regulated beverages under existing regulations or laws.

B. As set forth in R.S. 26:150(B)(4), no dealer shall do any act or thing which, by the laws of this state, is defined or prohibited as an unfair practice. Unfair sales as defined and prohibited in R.S. 51:421 et seq., are hereby deemed to be unfair practices.

C.1. To provide for the Truth in Labeling and Consumer Information Law, the following are required.

a. Any alcoholic beverage, concoction, or premixed alcohol mixed drink sold in a frozen drink machine, slush machine, or other type of dispensing system or device where the identity of the trademarked alcohol brands are lost in preparation, shall have affixed to such machine, dispensing system or device a sign clearly visible to the consumer showing the trademarked alcohol brands contained in such mixture.

b. In casinos, riverboats, and establishments holding Class AG(6) Exception permits, that cannot be accommodated with a back bar, due to their confined space and their method of service for alcoholic beverages, the owner shall prominently display all trademarked alcohol brands and types of alcohol available for consumption on the premises. The display of trademarked alcohol brands and types of alcohol must be obvious and clearly visible to consumers.

2. Any distributor of such alcoholic beverages may provide the signs or displays that are required to be posted by the retail dealer, pursuant to the cost limitations set forth in LAC 55:VII.317.

D. Any violation of these regulations are deemed unfair practices and shall subject the permittee to revocation, suspension, or withholding of his alcoholic beverage permits after a second or subsequent conviction and /or fines after any conviction.

AUTHORITY NOTE: Promulgated in accordance with R.S. 26:32.

HISTORICAL NOTE: Adopted by the Department of Public Safety, Office of Alcoholic Beverage Control, 1966, filed at the Office of the State Register, 1974, amended by the Department of Revenue, Office of Alcohol and Tobacco Control, LR 27:1931 (November 2001).

§305. Regulation III—Prohibitive Acts

A. Every dealer engaged in the business of dealing in alcoholic beverages shall, upon receipt of the document listing prohibitive acts on licensed premises mailed with all permits, post the same in the premises licensed in a place conspicuous, in full public view, subject to inspection at all times.

B. In connection with R.S. 26:88(5), the following terms are thus defined:

Disturbance of the Peace—those acts as now defined or as may hereafter be defined as such in the criminal laws of this state;

Lewd, Immoral, or Improper Entertainment, Conduct, or Practices—includes, by way of illustration and not limitation, any of the following:

a. lustful, lascivious, or sexually indecent dances;

b. offering one's self for sexual intercourse for hire;

c. crimes against nature as now defined or as may hereafter be defined as such in the criminal laws of this state.

Obscenity—those acts as now defined or as may hereafter be defined as such in the criminal laws of this state.

C. Contest and Game Promotions. Except as otherwise provided by law, contest and game promotions are allowed in accordance with the following restrictions.

1. No manufacturer, wholesaler, or retailer may allow, encourage, or otherwise entice any patron to risk the loss of anything of value or require any purchase payment or proof of purchase as a condition of entering or participating in any contest or game promotion or receiving any prize. Each patron allowed, encouraged, enticed, or required to make any purchase as a condition of entering any contest or game prohibited by this Subsection will constitute a separate violation.

2. No manufacturer, wholesaler, or retailer may collect an entry fee or cover charge as a condition of entering or participating in any contest or game promotion or receiving any prize. Each patron from whom an entry fee or cover charge is collected in violation of this Subsection will constitute a separate violation.

3. No manufacturer, wholesaler, or retailer may collect, hold, redistribute, possess or otherwise handle any prize money on behalf of players in any contest or game. Each patron for or from whom any such prize money is collected, held, or otherwise handled will constitute a separate violation of this Subsection.

4. No manufacturer, wholesaler, or retailer may encourage or otherwise entice any patron to participate in poker, blackjack, craps, or any other gambling game conducted on the licensed premises. Encouragement and enticement includes, but is not limited to, advertising in any form, including broadcast, print, indoor or outdoor signage, and word-of-mouth advertising. Advertising in any form will constitute prima facie evidence of a violation of this Subsection. Each patron responding to any such encouragement or enticement will constitute a separate violation of this Subsection.

5. No manufacturer, wholesaler, or retailer may allow any patron or other third party to conduct, manage, direct, or otherwise organize games, tournaments, or leagues involving multiple tables on their licensed premises. Each patron or other third party conducting, managing, directing, or otherwise organizing such games will constitute a separate violation of this Subsection. Each patron participating in games, tournaments, or leagues played on multiple tables will constitute a separate violation of this Subsection.

6. No manufacturer, wholesaler, or retailer may maintain or furnish any gambling paraphernalia to any patron for purposes of engaging in a contest prohibited by this Subsection. Gambling paraphernalia includes, but is not limited to, playing cards, poker chips, tokens, markers, buttons, card tables, dice, seating cards, and containers or other means of storage of wagers for safekeeping during any prohibited game. Pool or billiard tables, cues, chalk, racks, and balls; darts, dart boards, and score boards; bowling balls and shoes are not subject to provisions of this Subsection.

7. All prizes awarded must be furnished by the retailer hosting, or the sponsor of, any such contest or game promotion. Any and all prizes awarded in violation of this Subsection will constitute a separate violation.

8. Athletic competitions and games, including but not limited to pool or billiards, darts, golf, bowling, and softball, are not subject to provisions of this Section.

9. Legalized gaming, as provided for in R.S. 27:1 et seq., and charitable gaming, as provided for in R.S. 4:701 et seq., are not subject to provisions of this Section

10. Except as otherwise provided by law, contests based on the score of athletic competitions, or the outcomes or scores of a series of athletic competitions, commonly known as "football boards," "basketball pools," and other similar contests, are not subject to provisions of this Section.

D. No retailer may sell or deliver beer, spirits, wine or any other alcoholic beverage, whether high or low alcoholic content, in a retail establishment to any person through any unattended or self-service checkout counter or mechanical device unless the purchaser submits to a clerk a valid driver's license, selective service card, or other lawful identification which on its face establishes the age of the person as 21 years or older and there is no reason to doubt the authenticity and correctness of the identification prior to approaching the self-checkout counter.

1. Violation of Subsection D by a retail dealer's agent, associate, employee, representative, or servant will be considered the retail dealer's act for purposes of suspension or revocation of a permit.

2. Violation of Subsection D subjects the retail dealer to penalties provided in R.S. 26:96 and/or R.S. 26:292, including but not limited to suspension or revocation of his permit and penalty provisions in R.S. 26:171.

E. No retailer may allow the sale, dispensing, or distribution of beverages of high or low alcoholic content in any type of automatic mechanical vending machine activated by the use of a coin, token, or similar instrument except in class A establishments and subject to the following.

1. All state laws regulating retail establishments, including but not limited to, the legal drinking age, service to intoxicated persons, etc. apply and it is the responsibility of the retail dealer to ensure that his business is at all times compliant with all applicable laws and regulations. Violation of any such laws or regulations on the licensed premises will subject the retail dealer to penalties provided in R.S. 26:96 and/or R.S. 26:292, including but not limited to suspension or revocation of his permit and penalty provisions in R.S. 171.

2. All automatic mechanical vending machines are located in a facility where at least one employee is on duty during all hours of operation.

3. All automatic mechanical vending machines are located such that they are within the unobstructed line of sight and within 25 feet of at least one employee during all hours of operation.

4. All patrons must submit to an employee of the retail dealer a valid driver's licenses, selective service card, or other lawful identification which on its face establishes the age of the person as 21 years or older and there is no reason to doubt the authenticity and correctness of the identification prior to approaching any automatic mechanical vending machine containing alcoholic beverages of high or low alcoholic content.

5. All automatic vending machines must be under functioning video surveillance during all hours of operation.

AUTHORITY NOTE: Promulgated in accordance with R.S. 26:90 and R.S. 26:286.

HISTORICAL NOTE: Adopted by the Department of Public Safety, Office of Alcoholic Beverage Control, 1968, amended in 1973, filed at the Office of the State Register, 1974, amended by the Department of Revenue, Office of Alcohol and Tobacco Control, LR 31:2034 (August 2005), LR 31:2035 (August 2005), LR 38:2937 (November 2012).

§307. Regulation IV—Definitions and Explanations

A. Definitions

Alcoholic Beverages—[as used in R.S. 26:80(E), (F), (G), and (H)] interpreted as defined in R.S. 26:2(1).

Bona Fide Wholesaler—a dealer who in good faith truly and openly conducts the business of wholesaling alcoholic beverages to retailers in an immediate trade area without any simulation or pretense as to his true classification as a wholesaler.

Immediate Trade Area—(as used in R.S. 26:80) that geographical area in which a wholesale permittee in good faith actually carries on and intends to carry on a bona fide wholesale business by regular sales and deliveries of alcoholic beverages on hand to at least 20 percent of the retail permittees carrying on business in such area with separate sales to said retailers accounting for at least 50 percent of the gallonage handled by said wholesale permittee.

Liquor—[as used in R.S. 26:80(D)] interpreted as defined in R.S. 26:2(2).

B. Every bona fide wholesale dealer must necessarily have an immediate trade area the size of which depends upon the scope and extent of his operation.

C. Every applicant for a wholesale license must define his immediate trade area, as defined above, at the time of application. An applicant's designation must be reasonable

and must not contain artificial or unrealistic areas, or areas amounting to a pretense or simulation.

D. No wholesale permit shall be issued to any applicant, or, if issued no wholesale permit shall be held by any permittee unless such applicant or permittee, at all times throughout the license year, meets and maintains, in addition to all other qualifications and requirements provided by law, the applicable standards set forth in R.S. 26:80, and in these regulations.

E. A Schedule B is required by the board of every wholesale permit applicant. This schedule must be filed prior to the issuance or renewal of any wholesale permit and must be answered in anticipation of the coming year's operation.

F. At any time during the license year, the board may require any wholesale dealer to file with the board any pertinent information requested in connection with his classification as a wholesale dealer.

G. At any time during the license year, the board may order an inspection and audit of any wholesale dealer in connection with his classification as a wholesale dealer.

H. All inspections and audits made and all Schedule B's on file shall remain confidential in the board's files, unless and until the same are used in connection with enforcement purposes or any denial, suspension or revocation preceding based upon R.S. 26:80(D), (E), (F), (G), and (H).

AUTHORITY NOTE: Promulgated in accordance with R.S. 26:32.

HISTORICAL NOTE: Adopted by the Department of Public Safety, Office of Alcoholic Beverage Control, 1966, filed at the Office of the State Register, 1974.

§309. Regulation Number V—Solicitors

A. Applicants for state permits as solicitors shall meet the following qualifications in addition to those provided in R.S. 26:79:

1. is not the owner or manager required to file a Schedule A as the decision maker of a business having Class A, Class B or Class C Retail Liquor Permit;

2. if the spouse of a person who is the owner or manager of a business having a Class A, Class B or Class C Retail Liquor Permit, the solicitor-spouse cannot be the solicitor who calls on the spouse's business, and whatever supplier or wholesale license the solicitor's license is representing must not maintain any tied house or fair trade issues with the permitee;

3. these restrictions shall not apply to persons lawfully holding both retail and wholesale permits under the provisions of R.S. 26:83 (1950).

AUTHORITY NOTE: Promulgated in accordance with R.S. 26:32.

HISTORICAL NOTE: Adopted by the Department of Public Safety, Office of Alcoholic Beverage Control, 1950, filed at the Office of the State Register, 1974, amended by the Department of Revenue, Office of Alcohol and Tobacco Control, LR 35:1137 (June 2009).

§311. Regulation VI—Fingerprints Required

A. Except as provided in §311.B, every applicant, or if the applicant is a partnership or corporation, every person listed in §311.B or R.S. 26:79, shall furnish a set of fingerprints to the Department of Public Safety, Division of State Police, Box 66614, Baton Rouge, LA 70896, together with the identification sheet furnished by the board, prior to the filing of the application.

B. Applicants who are not seeking a new permit but only the annual renewal of a current one need not be fingerprinted if sets of fingerprints have been filed within the previous five year period in accordance with §311.A.

C. Every permittee who holds a permit for the year 1972 and who has not been fingerprinted previously shall furnish a set of fingerprints as required by §311.A within 30 days after notification by the board.

AUTHORITY NOTE: Promulgated in accordance with R.S. 26:32.

HISTORICAL NOTE: Adopted by the Department of Public Safety, Office of Alcoholic Beverage Control, 1972, filed at the Office of the State Register, 1974.

§313. Regulation VII—Records

A. The holders of wholesale liquor permits shall maintain records to reflect clearly information as follows:

1. the dollar value of liquor inventory on hand on the last day of each month;

2. total number of gallons of liquor sold each month;

3. total number of gallons of liquor sold each month to retail outlets in the immediate trade area other than to himself, if he also is a retail dealer;

4. total number of gallons of liquor sold each month to retail outlets owned by himself as the wholesale dealer;

5. a listing of the different retail dealers to whom sales were made each month showing name, address and permit number.

AUTHORITY NOTE: Promulgated in accordance with R.S. 26:32.

HISTORICAL NOTE: Adopted by the Department of Public Safety, Office of Alcoholic Beverage Control, 1973, filed at the Office of the State Register, 1974.

§315. Regulation VIII—Procedures Determined for Issuing Permits

A. Except as otherwise provided for by law and these regulations, all alcoholic beverage permits shall be issued for a period of no more than one year.

B. Notwithstanding Subsection A of this Section, the commissioner may issue alcoholic beverage permits which are valid for two years to applicants in good standing with the office of alcohol and tobacco control. Obtaining a two year permit shall not be mandatory for qualified applicants. Qualified applicants electing not to obtain a two year permit shall make application under the provisions of Subsection B of this Section.

C. For purposes of this Section, good standing shall mean any original or renewal applicant for a retail, wholesale, or manufacturer/brewer alcoholic beverage permit who has not been issued a warning, pled or been found guilty of any violations of Title 26 of the Louisiana Revised Statutes and/or the regulations promulgated thereunder more than once during the two year period preceding the original or renewal application date.

D. Permit fees for the entire permit period shall be due upon submission of an original or renewal application.

AUTHORITY NOTE: Promulgated in accordance with R.S. 26:71.1(1)(h) and 271.2(1)(h).

HISTORICAL NOTE: Promulgated by the Department of Revenue, Office of Alcoholic Beverage Control, LR 28:346 (February 2002), amended LR 38:144 (January 2012), amended by the Department of Revenue, Office of Alcohol and Tobacco Control, LR 38:2938 (November 2012).

§317. Regulation IX—Prohibition of Certain Unfair Business Practices

A. Definitions

Advertisement—includes any written or verbal statement, illustrations, or depiction which is in, or calculated to induce sales in, interstate or foreign commerce, or is disseminated by mail, whether it appears in a newspaper, magazine, trade booklet, menu, wine card, leaflet, circular, mailer, book insert, catalog, promotional material, sales pamphlet, or in any written, printed, graphic, or other matter accompanying the bottle, representations made on cases or in any billboard, sign, other outdoor display, public transit card, other periodical literature, publication, or in a radio or television broadcast, or in any other media; except that such term shall not include:

a. any label affixed to any bottle of distilled spirits or container or wine or malt beverages; or any individual covering carton, or other container of the bottle or container which constitute a part of the labeling under federal law and regulations; or

b. any editorial or other reading material (*i.e.* news release) in any periodical or publication or newspaper for the publication of which no money or valuable consideration is paid or promised, directly or indirectly, by any permittee, and which is not written by or at the direction of the permittee.

Alcoholic Beverages—any fluid or any solid capable of being converted into fluid, suitable for human consumption, and containing more than 1/2 of 1 percent alcohol by volume, including malt, vinous, spiritous, alcoholic or intoxicating liquors, beer, porter, ale, stout, fruit juices, cider, or wine.

Beverages of High Alcoholic Content—alcoholic beverages containing more than 6 percent alcohol by volume.

Beverages of Low Alcoholic Content—alcoholic beverages containing not more than 6 percent alcohol by volume.

Brewer—any person who, directly or indirectly, personally or through any agency, engages in the making or production of malt beverages.

Bureau—the Bureau of Alcohol, Tobacco and Firearms of the United States Treasury Department.

Commissioner—the Louisiana Commissioner of Alcohol and Tobacco Control.

Cost to Industry Members—the invoice cost, or the replacement cost, of the merchandise to the industry member, whichever is lower:

a. less all trade discounts except customary discounts for cash and discounts from the state or any governmental agency allowed for the payment of collection of any taxes;

b. plus, in the following order:

i. freight charges not otherwise included in the invoice cost or the replacement cost of the merchandise;

ii. cartage cost which shall be 3/4 of 1 percent of the cost to the industry member after adding freight charges but before adding cartage, any existing tobacco stamp excise tax, and markup;

iii. any existing tobacco stamp excise tax;

iv. a markup to cover a proportionate part of the cost of doing business which markup, in the absence of proof of a lesser cost, shall be 2 percent of the cost to the industry member after adding freight charges, cartage, and any existing tobacco stamp excise tax.

Enhancer—an item used as part of a display and which may be awarded to a customer who shops in a retail outlet voluntarily participating in a contest, offer, promotion, sweepstakes, or advertising or marketing campaign, the object of which is to award the enhancer to a winner thereof.

Exclusive Outlet—the requirement, by agreement or otherwise, that any retail dealer engaged in the sale of distilled spirits, wine, malt beverages, or malt liquors purchase any such products from such person to the exclusion in whole or in part of distilled spirits, wine, malt beverages, or malt liquors sold or offered for sale by other persons.

Handle—sell, use, distribute, store, consume, or otherwise handle.

Importer—any dealer who imports alcoholic beverages from any state, territory, possession, or foreign country for handling in Louisiana.

Industry Member—any person engaged in business as a distiller, brewer, rectifier, blender or other producer, or as an importer or wholesaler, of distilled spirits, wine, malt beverages, or malt liquors, or as a bottler, or warehouseman and bottler, of distilled spirits, but shall not include an agency of a state or political subdivision thereof, or an officer or employee of such agency.

Malt Beverages or *Malt Liquors*—beverage made by the alcoholic fermentation of an infusion or decoction, or combination of both, in potable brewing water, of malted barley with hops, or their parts, or their products, and with or without other malted cereals, and with or without the addition of unmalted or prepared cereals, other carbohydrates, or products prepared therefrom, and with or without the addition of carbon dioxide, and with or without other wholesome products suitable for human food consumption.

Manufacturer—any person who, directly or indirectly, personally or through any agency, engages in the making, blending, rectifying, or other processing of alcoholic beverages in Louisiana or outside the state for shipments to licensed wholesale dealers within the state.

Person—any individual, municipality, industry, public or private corporation, partnership, firm, or any other entity.

Retail Dealer or *Retailer*—any person who offers for sale, exposes for sale, has in his possession for sale or distribution, or sells alcoholic beverages in any quantity to persons other than licensed wholesale or retail dealers.

Retailer Trade Association—an association or similar designation with a majority of its members holding a state retail alcoholic beverage permit that is registered and in good standing with the Louisiana secretary of state as a non-profit entity who has applied with and received approval from the Internal Revenue Service as a 501(c)(6) tax exempt organization in good standing.

Social Media Advertisement—any advertisement disseminated by social network services, video sharing sites, blogs, microblogs, links and quick response codes.

Sweepstakes—any program which employs any enhancer(s) that exceed $155 in value as part of a retail display for any contest, offer, promotion, or advertising or marketing campaign.

Tied House—when any retail dealer engaged in the sale of distilled spirits, wine, malt beverages, or malt liquors is induced to purchase any such products from such person to the exclusion in whole or in part of distilled spirits, wine, malt beverages, or malt liquors sold or offered for sale by other persons through any of the following means:

a. by acquiring or holding after the expiration of any existing license any interest in any license with respect to the premises of the retail dealer;

b. by acquiring any interest in real or personal property owned, occupied, or used by the retail dealer in the conduct of his business;

c. by furnishing, giving, renting, lending, or selling to the retail dealer, any equipment, fixtures, signs, supplies, money, services, or other thing of value, subject to such exceptions as the commissioner of alcohol and tobacco control shall by regulation prescribe, having due regard for public health, the quantity and value of articles involved, established trade customs not contrary to the public interest and the purposes of this Section;

d. by paying or crediting the retail dealer for any advertising, display, or distribution service;

e. by guaranteeing any loan or the repayment of any financial obligation of the retail dealer;

f. by extending to the retail credit; or

g. by requiring the retail dealer to take and dispose of a certain quota of any of such products.

Wholesale Dealer or *Wholesaler*—any person who sells alcoholic beverages to licensed wholesale dealers or licensed retail dealers exclusively within the state or to any person for delivery beyond the borders of the state and who conducts a bona fide wholesale business and maintains a warehouse or warehouses for the storage and warehousing of alcoholic beverages in the area where domiciled and licensed by the state, and conducts and maintains systematic and regular solicitations, distribution, deliveries, and sales of the alcoholic beverages to licensed retail dealers located within the boundary of each parish and municipality in which the wholesale dealer makes any sale or delivery.

B. Prohibition against Certain Business Practices in the Alcoholic Beverage Industry

1. The Bureau of Alcohol, Tobacco and Firearms of the United States Treasury prohibits exclusive outlet and tied house arrangements with respect to the marketing and sale of beverages of both high and low alcoholic content as authorized by the Federal Alcohol Administration Act (FAA Act), 27 U.S.C., §205.

2. The bureau's enforcement of this federal law requires Louisiana to have a similar law that imposes similar requirements for similar transactions.

3. The bureau enforces the provisions of the FAA Act prohibiting exclusive outlets and tied house arrangements in the marketing and sale of alcoholic beverages in Louisiana under the authority of R.S. 51:422, the Louisiana Unfair Sales Law, and R.S. 26:287.A(9) and (10), which provide for additional causes for suspension and revocation of permits.

4. Prohibitions against exclusive outlets and tied house arrangements with respect to the marketing and sale of alcoholic beverages in Louisiana has stabilized the industry and prevented unlawful and unfair inducements for the retail purchase of alcohol and unlawful coercion, bribery, kickback demands, and other unfair and unlawful business practices.

5. It is in the best interest of the state's citizens that fair business dealings and unfettered competition govern the alcohol beverage industry in Louisiana, that it remain an industry dominated by fairness and integrity, and that it be safeguarded against the threat of corrupt and unfair business practices.

C. Marketing and Sale of Alcoholic Beverages in Louisiana

1. Exclusive outlet and tied house arrangements are unfair inducements to purchase goods or services by wholesalers or retailers, and it is unlawful for any person engaged in business as a distiller, brewer, rectifier, blender,

manufacturer, or other producer, or as an importer or wholesaler of distilled spirits, wine, malt beverages or malt liquors, directly or indirectly or through an affiliate, to have exclusive outlet or tied house arrangements.

2. Exceptions

a. Equipment

i. In order to provide proper dispensing of alcoholic beverages by retail dealers, industry members may provide, without charge, coil cleaning service, tap markers which show brand, and tapping equipment such as rods, vents, taps, hoses, washers, couplings, vent tongues, and check valves.

ii. Accessories such as carbon dioxide gas tanks, regulators, and other draught equipment accessories with a reasonable open market price of more than $5 but less than $200 per item must be sold to retailers at a price no less than the cost to the industry member as defined herein. Such sales shall be made for cash only.

iii. Draught equipment accessories with a reasonable open market value of $200 or more per item are not included under this exception.

b. Inside Signs

i. An industry member may furnish, give, rent, loan, or sell to a retailer inside signs that bear advertising matter. Inside signs include such things as mechanical devices, illuminated devices, clocks, neon signs, and other devices that are designed for permanent use in a retail account. These items may be furnished to an industry member if the total value of each sign in use at any one time does not exceed $350 to any one retail establishment, including all expenses incurred directly or indirectly by any industry member in connection with the purchase, manufacture, transportation, and assembly of such items and accessories. The industry member shall not directly or indirectly pay or credit the retailer for displaying such material or any expense incidental to their operation. In determining the value of these items for purposes of the limitation, value shall be the cost attributable to them at the time of their installation in the retail establishment. No retail establishment shall exclusively display inside signs from the same industry member.

ii. Display stackers, pricing cards, shelf talkers, rail strips, posters, and other such items constructed of paper, cardboard, and similar materials and which are designed and installed as point-of-sale material for temporary use in a retail account are not included under this Section and may be provided without limitation. Prior approval of point-of-sale material is not required and will not be given.

iii. Product displays may be furnished by an industry member to a retailer, provided that the total value of all product displays furnished by an industry member may not exceed $155 per brand in use at any one time in any one retail establishment. Product display are racks, bins, barrels, casks, shelving, and the like from which alcoholic beverages are displayed or sold. Product displays shall bear conspicuous and substantial advertising matter.

c. Outside Signs. The furnishing of outside signs by an industry member to licensed retail dealers is prohibited. It is unlawful for an industry member to, directly or indirectly, give, rent, loan, sell or in any other manner provide a retail dealer with any form of outside signage except as expressly allowed by the alcoholic beverage control laws and regulations.

i. This prohibition shall not be construed to apply to any advertising, branding or labeling artwork that is smaller than, proportionate in size and affixed to any equipment supplied to the holder of a type A, B, or C special event permit holder in accordance with Subsection F of Section 323 of this Chapter.

d. Advertising Specialties, Utility Items, Merchandise, and Supplies

i. Trays, coasters, paper napkins, clothing, groceries, snack foods, paper and plastic bags, cups, pitchers, glasses, menu covers, menu sheets, meal checks, match books, ash trays, ice, and other items that are primarily of utility value to a retailer cannot be given away but may be sold to retailers by industry members and the price charged for such items must be no less than the cost to the industry member as defined herein.

ii. Other retailer advertising specialties and novelty items, such as foam scrapers, thermometers, litter bags, pencils, bottle openers, balloons, lapel pins, and key rings that bear advertising matter, and are primarily valuable to the retailer as point-of-sale advertising media but have no utility value to the retailer, may be furnished, given, or sold to a retailer if the total cost to any industry member of the retailer advertising specialties furnished, given, or sold in connection with any one retail establishment in any one calendar year does not exceed $50.

iii. After the delivery of the retailer advertising specialties with a total cost to an industry member of $50 has been made by the industry member to a retail establishment during any one calendar year, any future deliveries of such items to that particular retail establishment by such respective industry member during the remainder of the calendar year must be effected only by the sale of the items at their reasonable open market price in the locality where sold. Any items sold, furnished, or given away under this Section must be itemized separately on the industry member's invoice and other records.

iv. Carbon dioxide gas or ice may be sold to a retailer only if sold at a reasonable open market price in the locality where sold.

e. Sponsorships

i. Wholesalers and manufacturers may sponsor events relating to or on the premises of retail dealers if nothing of value is given to retail dealers except as allowed elsewhere in this Section.

ii. T-shirts, caps, and similar items may be given to event contestants or patrons of the retail establishment but the total cost of these items may not exceed $250 per event.

iii. An industry member shall not sponsor an event on the premises of a retail dealer within 60 days of their last sponsored event.

iv. Alcoholic beverage sales must be incidental to the event being sponsored.

v. Industry members shall not directly or indirectly require that the sponsor's product be the exclusive product offered for sale at the event.

vi. A manufacturer or wholesaler may donate alcohol and trophies of nominal value to unlicensed civic, religious, or charitable organizations.

vii. In conjunction with events held on regular licensed retail premises, all restrictions on advertising and signage will remain in full force and effect, except that temporary paper signs and posters may be used inside the premises to advertise the event for not more than 31 days prior to the event. A wholesaler or manufacturer may list the name and address of one or more retail dealers and the date and time of one or more events in a social media advertisement for not more than 31 days prior to the event provided that:

(a). the social media advertisement does not also contain the retail price for any product;

(b). the retail dealer shall not provide the industry member with anything of value as a condition to having its business listed in the social media advertisement; and

(c). the wholesaler or manufacturer does not directly or indirectly, incur any cost or expend anything of value in connection with the social media advertisement.

f. Trade Calls

i. Bar spending during trade calls, where the alcohol purchased by a manufacturer or wholesaler for a consumer is consumed on retail licensed premises in the presence of the giver, shall be lawful so long as the state's laws regulating retail establishments such as the legal drinking age, etc., are observed and not more than $250 is expended during the trade call.

ii. No trade calls may occur on college campuses.

iii. Manufacturers and wholesalers may be accompanied by entertainers, sports figures, and other personalities during trade calls.

iv. The trade calls may be pre-announced to consumers in the retail account through table tents, posters, and other inside signs.

v. No outside advertising of such events through signs or any media is allowed.

g. Except as otherwise provided by law, the gift of beer, wine or beverage alcohol as a purely social courtesy to unlicensed persons by a manufacturer or wholesaler is not prohibited.

h. Sampling. Beer, wine, or beverage alcohol sampling for the purpose of allowing a customer to taste a brand of beverage alcohol must be conducted on any premises holding a permit as designated in R.S. 26:75.C.(1) and 275.B.(1) in accordance with the following restrictions.

i. A retail dealer, wholesaler or manufacturer may furnish the beer, wine, or beverage alcohol to be sampled and the cups to hold the beverages. The wholesaler or manufacturer may also provide and display point-of-sale material in an amount not to exceed $150 in value. The display materials shall only be placed inside of the facility and shall not block the aisles or other entrances or exits.

ii. No retail dealer, wholesaler, or manufacturer shall furnish a sampling of beverage alcohol in a greater quantity than two ounces per brand of beverage alcohol to each individual and no individual shall consume more than two ounces of each brand of beverage alcohol provided at the sampling. The sampling of a beverage alcohol having an alcoholic content of more than 23 percent by volume shall be limited to one-half ounce per serving per individual.

iii. All samplings shall be limited in duration to one day.

iv. No more than two samplings per brand of beverage alcohol shall be conducted on the same licensed premises in any month.

v. The retail dealer, wholesaler, or manufacturer shall provide the Office of Alcohol and Tobacco Control with written notice of the date, time, place, permit number and brand of beverage alcohol to be sampled at least one week prior to the date of the sampling.

vi. A wholesaler or manufacturer may promote a sampling event by listing the name and address of one or more retail dealers and the date and time of one or more sampling events in a social media advertisement for not more than 31 days prior to the sampling provided that:

(a). the social media advertisement does not also contain the retail price for any product;

(b). the retail dealer shall not provide the industry member with anything of value as a condition to having its business listed in the social media advertisement; and

(c). the wholesaler or manufacturer does not directly or indirectly, incur any cost or expend anything of value in connection with the social media advertisement.

vii. Industry members may use a third-party promotional company to conduct product samplings under the following conditions:

(a). the industry member has a written contractual agreement with the third-party promotional company that clearly defines the scope of the activities to be conducted by the promotional company on behalf of the industry member and the contractual agreement is provided

to the office of alcohol and tobacco control prior to any representation by the third-party promotional company on behalf of the licensed industry member;

(b). the third-party promotional company shall comply with all provisions of the alcoholic beverage control laws and regulations including, but not limited to, the provisions of this Section;

(c). violations of the alcoholic beverage control laws or regulations by a third-party promotional company or any of its representatives shall be considered the industry member's act for purposes of penalties or suspension or revocation of the industry member's alcoholic beverage permit;

(d). the third-party promotional company shall not be directly or indirectly owned, created, operated, inappropriately influenced, or controlled by an alcoholic beverage retail dealer licensed by the state of Louisiana or any person holding an interest therein;

(e). the industry member or third-party promotional company shall not give the retail dealer anything of value, unless otherwise allowed in the alcoholic beverage control laws and regulations;

(f). the name and permit number of the industry member and the name of the third-party promotional company shall be provided on all documents required to be submitted to the office of alcohol and tobacco control by this Section;

(g). the industry member shall ensure that all agents of the third-party promotional company possess valid Louisiana responsible vendor certifications prior to conducting any samplings of alcoholic beverages on the industry member's behalf;

(h). the third-party promotional company shall not offer for sale or solicit any orders for the sale of any alcoholic beverages produced or supplied by the industry member; and

(i). any sampling conducted by a third-party promotional company on behalf of an industry member shall count as a sampling conducted by the industry member.

i. Tubs and Other Single Containers. Tubs, ice chests, and other containers designed to hold single units of product and display them for sale in retail establishments may be furnished by manufacturers and wholesalers, provided that no more than two containers per retail location may be furnished by an industry member and the value of the items furnished shall not exceed $155.

j. Consignment Sales and Returns

i. It is unlawful for an industry member to sell, offer for sale, or contract to sell to any retailer, or for any retailer to purchase or contract to purchase any products under the following circumstances:

(a). on consignment;

(b). under conditional sale;

(c). with the privilege of return;

(d). on any basis other than a bona fide sale;

(e). if any part of the sale involves, directly or indirectly, the acquisition of other products from the trade buyer or the agreement to acquire other products from the trade buyer; or

(f). if the return or exchange of a product is solely because it overstocked or slow-moving.

ii. Transactions involving the bona fide return of products for ordinary and usual commercial reasons arising after the product had been sold are not prohibited, but the industry member is under no obligation to accept such returns. "Ordinary and usual commercial reasons" include:

(a). the exchange of product for products that are unmarketable because of product deterioration, leaking containers or damaged labels;

(b). the correction of any discrepancy between products ordered and products delivered within a one-week period; or

(c). products on hand at the time a retail dealer closes a business or terminates business operations, in which case the return may be for cash or credit against outstanding indebtedness. This also includes a temporary seasonal event or temporary shutdown or slowdown where the industry member is able to show that the products are likely to spoil during the off season.

iii. Out-dated product or product that is within 30 days of date code expiration may be exchanged for other products. Products for which there is only a limited seasonal demand, such as holiday decanters and distinctive containers, may only be exchanged for non-distinctive like products.

k. Coupons and Rebates. Alcoholic Beverages of High Alcoholic Content, excluding Malt Beverages. Except as otherwise provided by law, coupon and rebate offers, promotions or marketing campaign of alcoholic beverages of high alcoholic content, excluding malt beverages, are allowed in accordance with the following restrictions.

i. Any coupon or rebate offer, promotion, or marketing campaign must be redeemable directly by the manufacturer or a third-party, including but not limited to, a clearinghouse retained by the manufacturer at its sole expense.

ii. No retailer can be required to participate in any offer, promotion, or marketing campaign.

iii. No retailer can be required to bear any of the costs associated with any offer, promotion, or marketing campaign.

iv. No one under the legal drinking age during the time of the offer, promotion or marketing campaign may participate in any offer, promotion, or marketing campaign.

v. All coupon or rebate offers, promotions, and marketing campaigns must be for a specified time not to

exceed 90 days from the first date on which such offers may be redeemable.

vi. No coupon or rebate offer, promotion, or marketing campaign may result in any sale of alcoholic beverages for a price of less than 6 percent above the invoice cost.

l. Coupons and Rebates: Malt Beverages of Not More than or More than 6 Percent Alcohol by Volume. Except as otherwise provided by law, coupon and rebate offers, promotions or marketing campaigns of malt beverages of not more than or more than 6 percent alcohol by volume are allowed with the following restrictions.

i. Instantly Redeemable Coupons (IRCs) shall be prohibited. Coupons and rebates shall only be redeemable by mail.

ii. When marketing more than one product, "cross-merchandising" or "cross-promotion", mail-in rebates ("MIRs") shall only be redeemable upon the providing of proof of purchase of all products involved in the coupon or rebate marketing, "cross-merchandising" or "cross-promotion" offer.

iii. Coupon and rebate values shall be equal to or less than the following:

(a). packages containing no less than 6 and no more than 11 single units, $1;

(b). packages containing no less that 12 and no more than 17 single units, $2;

(c). packages containing no less that 18 and no more than 23 single units, $3;

(d). packages containing no less that 24 or more single units, $4.

iv. Wholesale or retail dealers of malt beverages shall not incur any cost in connection with any coupon or rebate offers, promotions or marketing campaigns.

m. Enhancers, as defined in this Chapter, may be used as part of a contest, offer, promotion, sweepstakes, or advertising or marketing campaign.

i. Items may include ice chests, grills, rafts, and other items not to exceed $155 in value.

ii. Industry members utilizing enhancers must provide either entry forms and a drop box in which all entries must be placed, a mailing address to which entries may be sent, or an Internet or other electronic address where entries may be accepted, and post the date of the official prize drawing.

n. Sweepstakes. Sweepstakes, as defined in this Chapter, may be used as part of a contest, promotion, or advertising or marketing campaign with the following restrictions.

i. Enhancers that exceed $155 in value, such as four-wheel all-terrain vehicles, trips, etc., may be utilized as part of a sweepstakes.

ii. Industry members and wholesalers must offer the opportunity to participate in any sweepstakes conducted to the entire retail base which the participating wholesalers serve.

iii. Participation by retailers must be voluntary.

iv. Enhancers cannot be displayed within any retail outlet.

v. Photographs or models of enhancers may only be displayed, provided the photographs or models do not exceed $155 in value.

vi. Industry members conducting sweepstakes must provide entry forms and a drop box in which all entries must be placed, a mailing address to which entries may be sent, or an Internet or other electronic address where electronic entries may be accepted, and post a date on which the official prize drawing will occur.

vii. Industry members are prohibited from purchasing enhancers from any retail outlet participating in the display or sweepstakes.

viii. Retail owners, industry members, and their employees and family members are not eligible to participate in any display or sweepstakes drawing allowed under provisions of this Section.

o. Retail Trade Associations. Industry members may participate in the activities of a retailer-affiliated trade association, as defined in this Section, only in the following ways:

i. by advertising in convention publications and/or programs, if the advertising fees are the same rate offered to all other participants at the event;

ii. by being an associate member;

iii. by renting display booth space if the rental fee is the same as paid by all exhibitors at the event;

iv. by purchasing tickets to functions and paying registration fees if the payments or fees are the same as paid by all attendees, participants or exhibitors at the event;

v. by exhibiting their products and offering single serve portions of their products at no cost for immediate consumption on the premises of the exhibition without having to obtain a special event permit;

vi. all state and parish or municipal excise taxes due shall be paid prior to the provision of any products for consumption at exhibition events;

vii. the industry member shall provide the Office of Alcohol and Tobacco Control with written notice of the location, date(s) and time(s) it intends to exhibit any product no less than five business days prior to the exhibition; and

viii. the industry member's participation with a retailer trade association shall not benefit one or more of the trade association's members to the exclusion, in whole or in part, of the other retail members.

p. Reasonable Retail Entertainment. The furnishing of food and beverages, entertainment and recreation by an industry member to a retail dealer or its owners, officers, members, directors, stockholders, employees, agents, managers, or subsidiaries is prohibited except under all of the following conditions:

i. the value of food, beverages, entertainment and recreation shall not exceed $500 per person on only one occasion per week;

ii. the providing industry member must accompany the receiving retail member to the event at which the food, beverages, entertainment and/or recreation are provided;

iii. in the course of providing food, beverages, entertainment or recreation under this Rule, upper tier industry members may only furnish local transportation;

iv. food, beverages, recreation and entertainment may also be provided during attendance at a convention, conference, or similar event so long as the primary purpose for the attendance of the retailer at such event is not to receive benefits under this regulation; and

v. each industry member shall keep complete and accurate business records and/or other documents reflecting all expenses incurred for retailer entertainment for two years.

q. Events at Unlicensed Venues. The provisions of R.S. 26:287 and this Section shall not be construed to prohibit an alcoholic beverage manufacturer, wholesale dealer or retail dealer from sponsoring, providing sponsorship signs, promoting or advertising an alcoholic beverage brand or product, or purchasing, displaying, and/or transmitting indoor or outdoor signs or other advertising and marketing products at a premises that does not hold a retail alcoholic beverage permit, or for any event at such premises, by agreement with the owner, operator, promoter, lessee, a party with a right of use, or management company of the unlicensed venue if all alcoholic beverages are sold and/or served at the premises by a person holding a class A-caterer's permit issued in accordance with these regulations and all of the following conditions apply:

i. the caterer is engaged to provide food and beverage concession services pursuant to a written agreement with the owner, operator, promoter, lessee or management company of the premises where alcoholic beverages are sold and/or served;

ii. the caterer receives no monetary benefit, directly or indirectly by any scheme or device or in any form or degree from the manufacturer, wholesaler, or retailer in connection with the provision or purchase of sponsorship, signs, advertising or marketing products from the owner, operator, promoter, lessee, party with a right of use, or management company of the premises. The provision of indoor or outdoor signs or other advertising or marketing products, including mobile dispensing equipment which display the name, logo, or other branding of an alcoholic beverage manufacturer, or wholesaler pursuant to an advertising or sponsorship agreement with the owner, operator promoter, lessee, a party with a right of use or management company of the premises, and the use of proceeds of a manufacturer's, or wholesaler's, purchase of indoor or outdoor signs or other advertising and marketing products from the owner, operator, promoter, lessee, a party with a right of use or management company of the premises conducting events to enhance or otherwise benefit an event or the venue conducting events shall not be construed to be a direct or indirect monetary benefit to the caterer or any retail dealer located on or around the premises of the event or venue;

iii. the caterer is not owned, in whole or in part, by the owner, operator, promoter, lessee or management company of the premises, or a subsidiary, agent or manager of the event or premises that is a direct recipient of such monetary benefit as defined in this Subparagraph;

iv. the owner, operator, promoter, lessee or management company of the premises shall not directly or indirectly control or otherwise influence the quantity or brand of alcoholic beverages bought or sold by the caterer unless the caterer is owned, in whole or in part, by the owner of the premises who is not the direct recipient of such monetary benefit as defined in this Subparagraph; and

v. no part of the cost of an advertisement, sponsorship or promotion authorized by this subparagraph may be charged to or paid by a wholesale dealer unless the wholesaler either contracts directly with the owner, operator, promoter, lessee or management company of the unlicensed premises for the advertisement, sponsorship, or promotion or the wholesaler is a party to the advertising, sponsorship or promotion agreement between the manufacturer and the owner, operator, promoter, lessee or management company of the unlicensed premises.

D. As part of an original and each permit renewal application, every manufacturer, wholesaler and retailer shall certify in writing that the applicant and all persons acting on behalf of the applicant understands and agrees to comply with the market practices regulations provided for by law and these regulations. Specifically, every manufacturer, wholesaler and retailer shall certify in writing that:

1. the applicant understands that manufacturers and/or wholesalers are prohibited from providing a retailer with anything of value unless explicitly enumerated as an exception in the Alcoholic Beverage Control Law or these regulations;

2. manufacturers and wholesalers are prohibited from inducing or otherwise influencing, directly or indirectly, a retailer from selling and/or serving its products to the exclusion, in whole or in part, of products of other manufacturers and/or wholesalers including but not limited to illegally influencing the retailer in any way regarding the quantity or brand of alcoholic beverages bought or sold by a retailer; and retailers are prohibited from accepting or requiring any such inducement or other influence; and

3. if anyone violates the market practices laws and regulations of the state of Louisiana, the United States or any

other state, their permit(s) is subject to suspension, revocation and/or assessment of a fine or other penalty provided for by law.

E. Penalty. The commissioner of the Office of Alcohol and Tobacco Control may seek suspension or revocation of the permit or permits of a violator and may impose such other penalties or administrative remedies against violators as are prescribed by law for violations of the Alcoholic Beverage Code.

AUTHORITY NOTE: Promulgated in accordance with R.S. 26:150.

HISTORICAL NOTE: Promulgated by the Department of Public Safety, Office of Alcoholic Beverage Control, LR 4:463 (November 1978), amended LR 5:11 (January 1979), amended by the Department of Public Safety and Corrections, Office of Alcoholic Beverage Control, LR 17:607 (June 1991), LR 20:671 (June 1994), amended by the Department of Revenue and Taxation, Office of Alcoholic Beverage Control, LR 22:116 (February 1996), LR 26:2631 (November 2000), LR 28:1484 (June 2002), LR 31:1344 (June 2005), amended by the Department of Revenue, Office of Alcohol and Tobacco Control, LR 35:89 (January, 2009), LR 38:1286 (May 2012), LR 38:2938 (November 2012), LR 42:66 (January 2016).

§319. High Alcoholic Content Beverages—Stocking, Pricing, and Rotating

A. Persons holding valid Louisiana wholesale alcoholic beverage permits, their agents, servants or employees, manufacturers' agents, importers and brokers may price, stock and rotate merchandise at retail premises only to the following extent.

1. Dealers in beverages of more than 6 percent alcohol by volume and in wine coolers containing more than 6 percent alcohol by volume and pre-mixed beverages of any alcoholic content may build and stock displays of their product on the premises of retail dealers. Displays can in no way be part of the dealer's regular shelving. They may restock displays for a maximum period of one month after the initial display has been installed. They may not price the displays. They are prohibited from pricing and stocking shelves on the premises of retail dealers and from affixing security tags. Industry members are granted authority to maintain the quality of their product on retail shelves, provided, that products purchased from other industry members are not altered or disturbed. The act of picking up alcoholic beverages in excess of 6 percent alcohol by volume for credit or exchange from a retail dealer by a wholesale dealer is considered a consignment sale and is therefore specifically prohibited.

2. No wholesale dealer of beverages that are more than 6 percent alcohol by volume shall handle or move any alcoholic beverages delivered to the premises of a retail dealer by a competing wholesale dealer, nor shall a wholesale dealer reset all or any part of the alcoholic beverages situated on the premises of a retail dealer, nor shall a wholesale dealer engage in the initial setting of products into a new store, unless the retail dealer sends notice, by certified mail to the Commissioner of Alcohol and Tobacco Control, stating the date, time, and location permit number of the contemplated movement, reset, or initial setting of alcoholic beverages. The addition of new products into the alcoholic beverage section shall not constitute a reset under the provisions of §319. Not less than one week prior to the approved date of such activity, the retail dealer shall mail copies both of the notice and commissioner's written approval, to all wholesale dealers whose products are situated on their premises. The retail dealer shall maintain a list of the names and addresses of the wholesale dealers receiving such notice, and a copy of that list shall be filed with the Commissioner of Alcohol and Tobacco Control.

3. A wholesale dealer whose products are situated on the premises of a retail dealer must be given the opportunity to participate in any movement or reset of those products, and no retail dealer shall, under any circumstances, exclude a wholesale dealer from such participation. The reset of all or any part of the beverage alcohol situated on the premises of a retail dealer may not occur more than twice during any calendar year. The stocking of cold boxes by a wholesale dealer in a retail dealer's premises is permitted.

4. The spotting of shelves by a wholesale dealer in a retail dealer's premises is prohibited. The act of manually entering delivery or invoice information into the retail dealer's computer system at the time of delivery is prohibited.

5. Except as authorized under §319, employees of a wholesale dealer shall not, in connection with the sale or delivery of alcoholic beverages to a retail dealer, provide any services whatsoever to a retail dealer.

B. The Commissioner of the Office of Alcohol and Tobacco Control may seek a suspension or revocation of the permit or permits of a violator and may impose such other penalties or administrative remedies as are prescribed by law for violators of the Alcoholic Beverage Control Law.

AUTHORITY NOTE: Promulgated in accordance with R.S. 26:287 and R.S. 26:150(A).

HISTORICAL NOTE: Promulgated by the Department of Public Safety, Office of Alcoholic Beverage Control, LR 6:734 (December 1980), amended LR 17:609 (June 1991), amended by the Department of Revenue, Office of Alcohol and Tobacco Control, LR 25:311 (February 1999).

§321. Staggering of Expiration Dates

A. In accordance with the authority of R.S. 26:794(B), the expiration dates of retail permits issued by the Office of Alcohol and Tobacco Control shall be staggered in accordance with the provisions of this Section.

B. Purpose. The purpose of this staggering process is to provide for the even distribution of expiration dates of new and existing permits based upon the parish in which the licensed establishment is located. This will allow the Office of Alcohol and Tobacco Control to concentrate its limited resource to the particular region of the state in which all retail permits are scheduled to expire. The expiration date of retail permits will be easy to determine and thereby assist both state and local enforcement agents, retail and wholesaler dealers in the enforcement of the licensing requirements contained in Title 26. This in turn will reduce

the ever-increasing number of delinquent renewal applications filed with this office and eliminate the purchase and resale of alcoholic beverages by unlicensed establishments.

C. New Business Application and Related Fees

1. Beginning February 18, 1998, the expiration date of all retail permits issued pursuant to new-business applications shall have an expiration date to be determined by the Office of Alcohol and Tobacco Control in accordance with Subsection G of this Section.

2. The fee for all such new business permits shall be as set forth in Sections 71 and 271 of Title 26.

D. Renewal of Existing Permits and Related Fees

1. The renewal of an existing permit during this staggering process shall be for a period of not less than seven months nor more than 18 months, which period shall be determined by the Office of Alcohol and Tobacco Control in accordance with Subsection G of this Section.

2. The fee for such a permit shall be determined by a proration of the annual fee as established by Title 26 over the appropriate number of months.

E. Renewal Deadline: Penalties

1. Applications for the renewal of permits issued pursuant to this regulation shall be due in the Office of Alcohol and Tobacco Control on or before the date of expiration on current permit.

2. The monetary penalties established in Sections 88 and 285 of Title 26 for those permittees who fail to timely file their renewal application shall remain in effect. The permittee shall be charged the delinquency penalty over and above the prorated fee.

F. Gross Sales. The payment of an additional permit fee by retailers based on the amount of their gross liquor sales as provided in Section 71 of Title 26 shall continue and shall be assessed on the gross sales made during the preceding calendar year. In renewal permits issued pursuant to this regulation, the additional fee shall be prorated over the appropriate number of months.

G. Expiration Date of Retail Permit. All retail permits issued after February 18, 1998, by the Office of Alcohol and Tobacco Control shall expire in accordance with the following schedule.

Parish Code	Parish Name	Expire Month
1	Acadia	October
2	Allen	March
3	Ascension	January
4	Assumption	November
5	Avoyelles	July
6	Beauregard	March
7	Bienville	September
8	Bossier	September
9	Caddo	September
10	Calcasieu	March
11	Caldwell	December
12	Cameron	March
13	Catahoula	December
14	Claiborne	September
15	Concordia	December
16	DeSoto	September
17	East Baton Rouge	January
18	East Carroll	December
19	East Feliciana	August
20	Evangeline	July
21	Franklin	December
22	Grant	December
23	Iberia	October
24	Iberville	July
25	Jackson	December
26	Jefferson	February
27	Jefferson Davis	March
28	Lafayette	October
29	Lafourche	November
30	LaSalle	December
31	Lincoln	September
32	Livingston	August
33	Madison	December
34	Morehouse	December
35	Natchitoches	December
36	Orleans	May
37	Ouachita	December
38	Plaquemines	April
39	Point Coupee	July
40	Rapides	July
41	Red River	September
42	Richland	December
43	Sabine	September
44	St. Bernard	April
45	St. Charles	April
46	St. Helena	August
47	St. James	April
48	St. John	April
49	St. Landry	July
50	St. Martin	October
51	St. Mary	November
52	St. Tammany	August
53	Tangipahoa	August
54	Tensas	December
55	Terrebonne	November
56	Union	December
57	Vermillion	March
58	Vernon	March
59	Washington	August
60	Webster	September
61	West Baton Rouge	July
62	West Carroll	December
63	West Feliciana	August
64	Winn	December

AUTHORITY NOTE: Promulgated in accordance with R.S. 26:794.

HISTORICAL NOTE: Promulgated by the Department of Public Safety and Corrections, Office of Alcoholic Beverage Control, LR 12:247 (April 1986), amended by the Department of Revenue, Office of Alcohol and Tobacco Control, LR 24:1318 (July 1998), LR 40:1114 (June 2014).

§323. Regulation XI—Fairs, Festivals and Special Events

A. For purposes of this regulation, special events are defined as events, held at any location, where alcoholic beverages are served as an incidental part of the event for payment rendered or are supplied as a part of a general admission or other type fee.

B. For such events, this office will issue a special temporary retail alcoholic beverage permit. These permits authorize alcoholic beverages to be sold, served and/or supplied at the special event for a maximum duration of three consecutive days only, but wholesalers may deliver alcoholic beverages to the event location up to 2 days prior to the effective date of the permit. No more than 12 such permits shall be issued to any one person, organization or entity within a single calendar year.

1. There shall be three types of temporary alcoholic beverage permits—Type A, Type B and Type C.

a. Type A permits will be issued only to non-profit organizations with tax exempt status under the United States Internal Revenue Code, Sections 501(c)(3) and 501(c)(8). To qualify for this permit, applicants must submit written proof of their tax exempt status, a copy of a local permit or letter from the local governing authority granting their permission to sell alcoholic beverages, a valid lease, contract or written permission of the owner of the property upon which the event is to be held if the property is not owned by the applicant and a completed, notarized application form. Type A permits shall be issued without charge by the Office of Alcohol and Tobacco Control.

b. Type B permits will be issued only to non-profit organizations which are able to provide some type of written proof of their non-profit status, but are unable to show written proof of their tax exempt status under the Internal Revenue Code sections cited above. To qualify for this permit, applicants must submit the same documentation as for Type A permits, substituting the written proof of non-profit status for the written proof of tax exempt status. Applicants for Type B permits will be assessed a $10 handling fee to cover the cost of processing the application.

c. Type C permits will be issued to persons holding limited events where alcoholic beverages are sold or supplied as part of a general admission or other type fee, but who do not meet the requirements for Type A or Type B temporary permits. To qualify for a Type C temporary permit, applicants must meet the qualifications required of permit holders under R.S. 26:80 and R.S. 26:280 and must submit a copy of a local permit or letter from the local governing authority granting their permission to sell alcoholic beverages, a valid lease or contract with the owner of the property on which the event is to be held if it is not owned by the applicant and a completed, notarized application form. A $100 fee will be assessed to cover the cost of handling the Type C permit application.

2. Class A—Caterer's permits shall not be utilized in lieu of Special Event permits.

C. The holders of temporary special event permits may return unused product at the conclusion of the event for cash or credit refund.

D. The provisions of R.S. 26:90 and 26:286 shall apply to all special events for which temporary permits are issued under this regulation, and violations are punishable as provided for under the provisions of Title 26 of the Revised Statutes. The provisions of R.S. 26:81 and 26:281 shall not apply to special event permits.

E. The provisions of R.S. 26:287(9) and Regulation IX dealing with unfair business practices shall not apply to the holders of Type A and Type B special event permits, except as provided in Subsection F below, but shall fully apply to the holders of Type C special event permits.

1. Type A special events held on the premises of a class A, B or C retail alcoholic beverage permit holder shall comply with all of the following conditions:

a. the special event permit is applied for and obtained in the name of the non-profit organization;

b. the non-profit organization is not affiliated, either directly or indirectly, with an alcoholic beverage manufacturer or wholesale dealer;

c. the non-profit organization holding the type A special event permit must return or remove all unused alcoholic beverage products at the conclusion of the event. No alcoholic beverage product purchased or otherwise obtained in the name of the non-profit organization or for the purpose of servicing the special event shall be left on the licensed premises at the conclusion of the event;

d. subject to inspection by the commissioner or his agents, the non-profit organization shall document and maintain record of:

i. the total amount of alcoholic beverages purchased for the event;

ii. the total amount of alcoholic beverages sold or served during the event; and

iii. the total amount of alcoholic beverages removed or returned at the conclusion of the event;

e. any and all signage, equipment or other items provided by an alcoholic beverage manufacturer or wholesale dealer in relation to the non-profit special event shall be removed from the premises of the retail dealer immediately upon conclusion of the special event;

f. the premise's class A, B, or C alcoholic beverage permit was not issued pursuant to R.S. 26:85.1 and R.S. 26:273C;

g. all proceeds generated by or in connection with the event shall be paid to the holder of the type A special event permit;

h. the holder of the class A, B or C retail alcoholic beverage permit shall receive no proceeds, alcoholic beverage products, sponsorship dollars, promotional items or

other items of value other than a reasonable rental fee at fair market value; and

i. The provisions of R.S. 26:287(9) and Regulation IX dealing with unfair business practices shall apply with respect to the holder of the class A, B or C retail alcoholic beverage permit holder.

F.1. When the holder of a special event permit of any type calls upon an industry member to service an event, the industry member must charge the permit holder for all equipment used and services rendered in an amount at least equal to that listed as follows:

a. labor—at a rate equal to that required as a minimum wage under the Federal Wage and Hour Law;

b. self contained electric units in which the beer container is refrigerated within the unit—$25 per day;

c. electric unit in which the beer container sits outside the cooling unit—$25 per day;

d. picnic pumps—$10 per day or may be sold to the permit holder in accordance with Subsection j below;

e. tubs—$10 per day or may be sold to the permit holder in accordance with subsection j. below;

f. cold plates—$25 per day;

g. trucks designed to handle packaged beer without refrigeration—$30 per day;

h. refrigerated trucks or mobile units such as trailers or other vehicles designed to handle package or draught beer—$100 per day;

i. cups, ice, additional CO_2 gas, gas picnic pumps, tubs and similar supplies and equipment—cost to industry member;

j. alcoholic beverages—at the price available to all other retail dealers in alcoholic beverage;.

k. stages, including labor to erect—$200 per day; and

l. tents, including labor to erect:

i. 12' x 12' or smaller—$30 per day;

ii. larger than 12' x' 12'—$50 per day.

2. Equipment such as that listed above may not be furnished to regular licensed retail dealers unless the dealer acquires a temporary special event permit. Equipment may not be provided by a wholesaler for functions where no permit is issued but beer is acquired from a retail dealer, such as private parties or receptions.

AUTHORITY NOTE: Promulgated in accordance with R.S. 26:793.

HISTORICAL NOTE: Promulgated by the Department of Public Safety and Corrections, Office of Alcoholic Beverage Control, LR 17:606 (June 1991), amended by the Department of Revenue, Office of Alcohol and Tobacco Control, LR 34:1634 (August 2008), LR 40:1112 (June 2014).

§324. Wine Producers; Fairs, Festivals, Farmer's Markets and Similar Venues

A. For purposes of this Section, the following definitions shall apply.

1. *Fair, Festival, Farmer's Market or Other Similar Venue*—any non-profit, state or local governmental organizational event being held in a limited duration capacity.

2. *Wine Producer*—the holder of a valid unsuspended wine producers permit, as defined in R.S. 26:2(21).

B. Wine producers may, with local authority, offer for sale and sell directly to consumers at fairs, festivals, farmer's markets and other similar venues under the following terms and/or conditions.

1. Any and all sales at fairs, festivals, farmer's markets and similar venues shall be limited in duration as provided in LAC 55:VII.323.

2. Notwithstanding Paragraph 1 of Subsection B above, if the site of the fair, festival, farmer's market or similar venue is utilized by a state or local governmental entity for purpose of promoting tourism and/or agribusiness, durational limitations provided in LAC 55:VII.323 shall not apply.

AUTHORITY NOTE: Promulgated in accordance with R.S. 26:85 and 793.

HISTORICAL NOTE: Promulgated by the Department of Revenue, Office of Alcohol and Tobacco Control, LR 33:1685 (August 2007).

§325. Caterer's Permits

A. The Office of Alcohol and Tobacco Control may issue a class A-caterer's permit to persons who meet the qualifications and criteria of either Paragraph 1, 2, 3 or 4 below.

1. Holders of any Class A, B or C liquor or beer retail permit will be allowed to sell and serve alcoholic beverages, on a temporary basis, limited to three days in duration, at events other than on the premises for which the holder's regular permit is issued.

a. This holder of a Class A—Caterer's permit must use the permit in conjunction with their A, B or C liquor and/or beer permit and shall expire at the same time as the regular A, B or C permit.

b. If the regular Class A, B or C permit ceases to be valid for cause, the caterer's permit ceases to be valid.

2. Class B liquor or beer retail permit holders shall be subject to the following terms and/or conditions.

a. Class A—Caterer's permits shall only be issued to holders of a Class B liquor and/or beer retail permit whose primary purpose is the sale of alcoholic beverages.

b. Class B liquor or beer retail permit holders who applied for and obtained a Class A—Caterer's permit prior to August 20, 2008, shall not be subject to Subparagraph a above.

3. Persons who do not otherwise qualify for a retail dealer permit pursuant to the provisions of R.S. 26:71.1 or R.S. 26:271.2, but who operate a facility with a fully equipped kitchen where food is prepared for the purpose of catering functions, will be allowed to obtain a Class A—Caterer's permit under the following conditions.

a. This holder of a Class A—Caterer's permit must derive 70 percent of their gross annual revenue from the sale of food or food-related product, and 40 percent of the gross revenue per event must be derived from the sale of food or food-related product.

b. This holder of a Class A—Caterer's permit must maintain separate sales figures for alcoholic beverages.

c. Class A—Caterer's permits shall not be used in lieu of Special Event permits.

4. Persons who do not otherwise qualify for a retail dealer permit pursuant to the provisions of R.S. 26:71.1 or R.S. 26:271.2, but who hold a written concessions agreement to provide food and beverage concession services at any arena, stadium, race track, amphitheater, auditorium, theater, civic center, convention center, or similar facility that is primarily designed and used for live artistic, theatrical, cultural, educational, charitable, musical, sporting, nationally sanctioned automobile or horse racing or entertainment events will be allowed to obtain a class A-caterer's permit for the premises under all of the following conditions.

a. The permit holder must have a written concession agreement to provide food and beverages concession services from the owner, operator or lessee of the premises. The written concession agreement shall contain an affirmative provision disavowing the right of any party to engage in conduct prohibited by the alcoholic beverage control laws and regulations.

b. The permit holder must not be owned, in whole or in part, by the owner, operator, lessee, subsidiary, agent, or company managing the premises.

c. The permit holder must not own, in whole or part, or manage the premises.

d. The permit holder shall receive no monetary benefit, directly or indirectly, by any scheme or device or in any form or degree from the alcoholic beverage industry including a benefit in the form of capital improvements, furniture, fixtures, equipment or supplies except as provided in Subsection C of this Section, unless otherwise allowed in the alcoholic beverage control laws and regulations. The provision and use of indoor or outdoor signs, or other advertising or marketing products, including mobile dispensing equipment, logo or other branding of an alcoholic beverage manufacturer or wholesaler pursuant to an advertising or sponsorship agreement with the owner, operator, promoter, lessee party with a right of use or management company of the premises, and the use of proceeds of a manufacturer's or wholesaler's purchase of indoor or outdoor signs or other advertising and marketing products or rights from the owner, operator, promoter, lessee, party with a right of use or management company of the premises, shall not be construed to be a direct or indirect monetary benefit to the permit holder.

e. The permit holder shall not receive any direct monetary benefit from advertising, promotional or sponsorship revenues generated by operation of the premises.

f. The owner, operator, lessee, subsidiary, agent or company managing the premises nor any alcoholic beverage manufacturer or wholesaler or agent thereof shall not, directly or indirectly, control the quantity or brand of alcoholic beverages bought, sold or served by the holder of the class A-caterer permit.

g. This class A-caterer's permit shall not be utilized to sell, serve or otherwise engage in business as an alcoholic beverage dealer at any premises where the primary purpose is the sale of food or alcoholic beverages, including, but not limited to, a bar, nightclub, restaurant, hotel, bowling alley, pool hall, or dance hall, or any premises that derives 75 percent or more of its gross revenue from the on-premise sale of alcoholic beverages.

B.1. An application for a Class A—Caterer's permit shall be made on forms prescribed by the Commissioner of the Office of Alcohol and Tobacco Control.

2. A Class A—Caterer must display the permit on the premises of the event being catered.

3. A Class A—Caterer must only cater events in an area in which the sale of alcoholic beverages has been authorized by local option election and with permission from the local governing authority.

4. A class A—caterer issued under Paragraphs 1, 2 and 3 of Subsection A of this Section must provide the Office of Alcohol and Tobacco Control with written notice of the date, time, and place of each catered event at least one week prior to the date of the event.

5. All alcoholic beverages at a catered event must be dispensed by the holder of the Class A—Caterer's permit or his employee, agent, or servant.

6. Class A—Caterers must comply with the provisions of the Responsible Vendor Program of R.S. 26:931 et seq.

7. The cost of the Class A—Caterer's permit is $200 per year or any portion thereof; costs shall not be prorated.

8. Class A—Caterer permits shall be renewed annually in accordance with the provisions relative to all other retail permits, specifically R.S. 26:88 and 285 and LAC 55:VII.321.

C. Holders of a caterer's permit must specifically comply with provisions of R.S. 26:90, 26:91, 26:286 and 26:287 in addition to other provisions not exempted; however, exceptions are: when the holder of caterer's permit calls upon an industry member to serve an event; at events other than upon the premises for which the holder's regular permit is issued, the industry member must charge the holder of the

caterer's permit for all equipment used and services rendered in an amount at least equal to that listed as follows:

1. labor—at a rate equal to that required as a minimum wage under the Federal Wage and Hour Act;

2. self contained electric units in which the beer container is refrigerated with the unit—$25 per day;

3. electric unit in which the beer container sits outside the cooling unit—$25 per day;

4. picnic pumps—$10 per day or may be sold to the permit holder in accordance with Paragraph 9 below;

5. tubs—$10 per day or may be sold to the permit holder in accordance with Paragraph 9 below;

6. cold plates—$25 per day;

7. trucks designed to handle packaged beer without refrigeration—$30 per day;

8. refrigerated trucks designed to handle packaged or draught beer or mobile units such as trailers or other vehicles designed to handle package or draught beer—$100 per day;

9. cups, ice, additional CO_2 gas, gas picnic pumps, tubs and similar supplies and equipment—cost to industry member;

10. alcoholic beverages—at the price available to all other retail dealers in alcoholic beverages;

11. stages, including labor to erect—$200 per day; and

12. tents, including labor to erect:

a. 12' x 12' or smaller—$30 per day;

b. larger than 12' x' 12'—$50 per day.

D. Any violation of these regulations or causes enumerated in Title 26 of the Louisiana Revised Statutes shall subject the retailer to revocation, suspension, or withholding of his alcoholic beverage permits.

AUTHORITY NOTE: Promulgated in accordance with R.S. 26:793.

HISTORICAL NOTE: Promulgated by the Department of Public Safety and Corrections, Office of Alcoholic Beverage Control, LR 19:904 (July 1993), amended by the Department of Revenue, Office of Alcohol and Tobacco Control, LR 26:2631 (November 2000), LR 34:1633 (August 2008), LR 41:2689 (December 2015).

§327. Class C-Package Store Retail Alcoholic Beverage Permits

A. Definitions

Batch—any mixture of ingredients or concoction prepared, blended, mixed, or otherwise combined in the preparation of a regulated or alcoholic beverage, as defined by R.S. 26:2 and 241, to be served to patrons in the form of specialty frozen drinks, commonly known as frozen daiquiris.

Batch Freezer—any refrigeration or cooling unit, machine, device or processor of any kind in which a *batch*, as defined in this Section, of specialty frozen drinks, commonly known as frozen daiquiris, is placed for purposes of transforming the batch into frozen specialty drinks for service to patrons, regardless of whether the refrigeration or cooling unit, machine, device or processor includes a spigot or other mechanism for pouring the specialty frozen drink into single serving closed containers for service to patrons.

B. In order to qualify for a Class C-package store retail alcoholic beverage permit, the applicant must:

1. operate a place of business where the sale and service of alcoholic beverages represents more than 50 percent of the business' total annual retail sales revenue;

2. not offer to sell, sell, or otherwise distribute motor fuel anywhere on or about the licensed premises;

3. sell and serve alcoholic beverages, including frozen specialty alcoholic beverages, in closed containers prepared for transportation and consumption off the licensed premises only;

4. maintain a public habitable floor area of no less that 1,000 square feet;

5. not allow any person under the age of 18 years to enter, visit, or loiter in or about the licensed premises;

6. not employ anyone under the age of 18 years;

7. not allow the consumption of any alcoholic beverage for any purpose of reason on or about the licensed premises;

8. not permit the mixing, sale, or service of mixed alcoholic beverages on the licensed premises;

9. notwithstanding Paragraph 8 above, a Class C-package store license holder may combine non-alcoholic frozen specialty mixes with factory sealed and packaged alcoholic beverages on the licensed premises for the sole purpose of preparing a *batch*, as defined in Subsection A of this Section, which batch is placed in a *batch freezer*, as defined in Subsection A of this Section designed for the dispensing of frozen specialty alcoholic beverages, provided the license holder complies with the following at all times:

a. the mixing of a *batch*, as defined in Subsection A above, shall at all times be conducted out of the view of the public;

b. open bottles of manufacturer-packaged alcoholic beverage or any other open alcoholic beverage shall be kept out of view of the public;

c. all frozen specialty drinks shall be dispensed from batch freezer machines into containers affixed with a lid for transportation and consumption by the customer off of the licensed establishment's premises. The use of blenders or similar devices is prohibited;

d. no additional alcoholic beverage shall be added to the batch after the batch is placed into the batch freezer machine. The sale and service of additional "shots" or any other portion of any alcoholic beverage or the introduction

of any additional alcohol into a container used for the sale or service of frozen specialty drinks to the public is prohibited;

e. the preparation and/or sale of one or more drinks commonly known as "highballs," "cocktails," or any type of "mixed drink" other than frozen specialty alcoholic beverages, as described and/or defined in this Section, is expressly prohibited on or about the licensed premises.

AUTHORITY NOTE: Promulgated in accordance with R.S. 26:71.2B.

HISTORICAL NOTE: Promulgated by the Department of Revenue, Office of Alcohol and Tobacco Control, LR 33:1684 (August 2007).

§329. Regulation XII—Participation in Hearing by Video Conference

A. To the extent practicable and if the parties do not object, the commissioner may authorize the use of teleconference, video link, or other visual remote communications technology to conduct all or any portion of any hearing authorized by the provisions of Title 26 of the Louisiana Revised Statutes and the regulations promulgated thereunder; unless prohibited by law.

B. Prior to authorizing the use of teleconference, video link, or other visual remote communications technology for the conducting of any hearing, the commissioner shall provide the permittee with written notice of his intent to do so. The notice shall be sent by certified mail to the permittee at the address of his place of business as given in his application for the permit and shall be sent not less than ten nor more than thirty calendar days from the scheduled hearing date. When so addressed and mailed, the notice shall be conclusively presumed to have been received by the permittee.

C. Any party objecting to the commissioner's authorization of the use of teleconference, video link, or other visual remote communications technology to conduct all or any portion of any authorized hearing shall provide the commissioner with written notification of the objection at least five days prior to the scheduled hearing date. Upon receipt of any objection, the commissioner shall not allow the use of teleconference, video link, or other visual remote communications technology to conduct any portion of the hearing for which a proper objection was raised. Failure of a permittee to object in writing within at least five calendar days prior to the scheduled hearing date shall conclusively constitute a waiver of any objections.

D. Any use of teleconference, video link, or other visual remote communications technology for the conducting of any hearing shall be done in real-time.

AUTHORITY NOTE: Promulgated in accordance with R.S. 99.1, 296.1, and 919.1 and Act 88 of the 2011 Regular Session of the Louisiana Legislature.

HISTORICAL NOTE: Promulgated by the Louisiana Department of Revenue, Office of Alcohol and Tobacco Control, LR 38:1285 (May 2012).

§331. Regulation XIII—Posting of the National Human Trafficking Resource Center Hotline

A. All establishments listed in R.S. 15:541.1(A) shall prominently display a poster furnished by the Office of Alcohol and Tobacco Control containing information regarding the National Human Trafficking Resource Center hotline in all male and female public restrooms located within the premises.

AUTHORITY NOTE: Promulgated in accordance with R.S. 15:541.1.

HISTORICAL NOTE: Promulgated by the Department of Revenue, Office of Alcohol and Tobacco Control, LR 40:1113 (June 2014).

§333. Regulation XIV—Alcoholic Beverage Container Label Registration

A. The purpose of this regulation is to promote the safety and welfare of Louisiana consumers and commerce by prohibiting alcoholic beverage labels that are deceptive or likely to mislead the consumer with regards to the nature of the product or quantity thereof; to ensure that the consumer is provided with adequate information as to the identity and quality of the products, the alcoholic content thereof, the net contents of the package, and the manufacturer or bottler or importer of the product; and to prohibit statements on alcoholic beverage labels that are disparaging of a competitor's products or are false, misleading, obscene, or indecent.

B. No alcoholic beverage manufacturer, supplier, or importer shall sell or ship or deliver for sale or shipment, or otherwise introduce in Louisiana commerce, any distilled spirits, wine, cider, mead, malt beverages, or any other product having an alcohol content of more than 1/2 of 1 percent by volume (unless expressly excepted in R.S. 26:3), unless all the following requirements have been met:

1. the alcoholic beverage manufacturer, supplier, or importer holds a valid manufacturer's permit with the Office of Alcohol and Tobacco Control;

2. each product is packaged in containers that comply with any applicable standard of fill and casing requirements set out in title 26 of the *Louisiana Revised Statutes*;

3. each product is labeled in conformity with all requirements of the applicable part of title 27 of the *Code of Federal Regulations*;

4. each product label has been registered in Louisiana via the electronic submission system approved by the Office of Alcohol and Tobacco Control by a manufacturer holding an active Louisiana manufacturer's permit; and

5. if product label registration with the Alcohol and Tobacco Tax and Trade Bureau is not required, each product label has been approved by the Office of Alcohol and Tobacco Control.

C. All alcoholic beverage product label registrations shall be renewed annually by June 30 via the electronic submission system approved by the Office of Alcohol and Tobacco Control.

D. The submission of a certificate of label approval prepared in compliance with the requirements of the Alcohol and Tobacco Tax and Trade Bureau shall constitute satisfactory compliance for the registration of products and labels pursuant to this Section, and such registration shall become effective upon submission of a completed application.

E. No manufacturer licensed in Louisiana shall sell or offer for sale to any wholesaler any alcoholic beverage product that does not have a valid and current label registration with the Office of Alcohol and Tobacco Control.

F. No person or entity shall alter, destroy, obliterate, or remove any mark, brand, or label upon distilled spirits, wine, cider, mead, malt beverages, or any other product having an alcohol content of more than 1/2 of 1 percent by volume (unless expressly excepted in R.S. 26:3) held for sale in Louisiana commerce or after shipment therein, except as authorized by federal law or except pursuant to federal regulation authorizing relabeling for purposes of compliance with the requirements of federal or state law or regulation and submitted to the Office of Alcohol and Tobacco Control for advance approval.

G. No retail dealer operating in Louisiana shall receive, sell, or offer for sale any alcoholic beverage product that misrepresents the brand, identity, age or origin of the beverage.

H. All alcoholic beverage brands and registered labels sold or offered for sale in Louisiana must be owned by a manufacturer licensed in Louisiana.

I. Violations of this Section may result in:

1. reporting to the Alcohol and Tobacco Tax and Trade Bureau;

2. the denial of a Louisiana alcoholic beverage permit; and

3. the imposition of any penalty permissible under Louisiana law.

AUTHORITY NOTE: Promulgated in accordance with R.S. 26:793(D).

HISTORICAL NOTE: Promulgated by the Department of Revenue, Office of Alcohol and Tobacco Control, LR 43:1555 (August 2017).

§335. Direct Shipment of Sparkling Wine or Still Wine to Consumers in Louisiana

A. Any manufacturer, wine producer or retailer of sparkling wine or still wine domiciled outside of Louisiana must obtain a permit from the commissioner as required by R.S. 26:359 prior to engaging in the direct shipment of sparkling wine or still wine to any consumer in Louisiana.

B. Access to Records. In order to determine compliance with R.S. 26:359, all manufacturers, wine producers, and retailers that direct ship sparkling wine or still wine to consumers shall make available to the commissioner all books, invoices, and records concerning the direct shipment of wine to consumers in Louisiana immediately upon request. This includes but is not limited to the following:

1. all invoices contained on the packages of wine required by R.S. 26:359(B)(1)(g);

2. all oral or written agreements with wholesalers licensed by the state of Louisiana;

3. all invoices and other records revealing the labels and brands sold to wholesalers licensed by the state of Louisiana;

4. a copy of any and all original applications and renewal applications submitted to the Louisiana Department of Revenue by manufacturers, wine producers and retailers domiciled outside of Louisiana seeking authority to ship sparkling wine or still wine directly to consumers in Louisiana, including any supporting documentation submitted in connection with such applications;

5. a copy of the monthly statements submitted to the Department of Revenue by manufacturers, wine producers and retailers domiciled outside of Louisiana pursuant to R.S. 26:359(D), including any supporting documentation submitted in connection with such monthly statements; and

6. a copy of all records with the transporters of such sparkling wine or still wine pertaining to such shipments to Louisiana consumers.

C. Inspection of Premises. The commissioner may inspect any premise where such sparkling wine or still wine that is sold or shipped directly to consumers in Louisiana are stored, sold or handled. No manufacturer, wine producer, or retailer who ships wine directly to Louisiana consumers may refuse to allow such inspection.

D. Payment of Taxes. Any manufacturer, wine producer, or retailer must timely report and remit all applicable excise and sales and use taxes due to the state of Louisiana. Failure to do so shall subject their permit to penalties as set forth in R.S. 26:96 and R.S. 26:292, including but not limited to suspension or revocation of the permit.

E. Monthly Reports to LDOR. Approved manufacturers, wine producers, or retailers domiciled outside of Louisiana must concurrently provide the commissioner with a copy of the monthly statements submitted to the Department of Revenue pursuant to R.S. 26:359(D), including all supporting documentation.

F. Authorized Recipients/Quantities. Sparkling wine or still wine may only be shipped directly to a consumer 21 years of age or older for their personal consumption. It may not be sold or shipped to a retailer, solicitor, broker, or any other agent of the manufacturer, wine producer, or retailer in the state for resale or distribution. The total amount of sparkling wine or still wine shipped in 750 milliliter bottles shall not exceed 144 per adult person per household address per calendar year.

G. Identification of Shipments. All shipments made by an authorized manufacturer or retailer of sparkling wine or

still wines that are shipped directly to any consumer in Louisiana shall be identified as follows.

1. The words "Alcoholic Beverage—Direct Shipment" shall be marked and clearly visible on both the front and back of the package in lettering measuring at least 1/4 inch in height.

2. The words "Unlawful to Sell or Deliver to Anyone under 21 Years of Age" must be clearly visible on the front of the package, in lettering measuring at least 1/4 inch in height.

3. The manufacturer's, wine producer's or retailer's Louisiana ATC permit number and the manufacturer's, wine producer's or retailer's out-of-state license number, if domiciled outside of Louisiana, shall be clearly displayed on the front of the package.

4. All shipments shall have affixed to the exterior packaging a notification to the person making the delivery that a signature of the recipient is required prior to delivery. The notice should be at least 3-inch by 3-inch and contain words similar to the following.

ATTENTION Courier
(Signature Required) Deliver to RECIPIENT address only. No indirect delivery. Disregard any Signature Release. Recipient MUST be at least 21 years old, and not show signs of intoxication.

H. Direct Ship Permit Renewals, Penalty. Permits for the direct shipment of wine as required by R.S. 26:359(B)(3) and (4) shall expire every year on December 31. Failure to timely file a renewal permit shall result in the imposition of penalties as provided for by R.S. 26:88 and R.S. 26:285.

I. Use of Approved Transporters Only. Approved manufacturers, wine producers, or retailers domiciled outside of Louisiana and manufacturers, wine producers or retailers domiciled inside of Louisiana may only sell or ship wine through transporters who are registered with the commissioner pursuant to R.S. 26:359(D)(3). Approved manufacturers, wine producers, or retailers domiciled outside of Louisiana and manufacturers, wine producers or retailers domiciled inside of Louisiana must notify the commissioner within 30 days of any change of transporters utilized.

J. Transporters Reporting Obligations. Every transporter of sparkling or still wine for direct shipment into or out of the state shall make and file a monthly report to the commissioner at its office in Baton Rouge, LA on or before the fifteenth day of the month following the calendar month for which the report is made. The report shall give an accurate account of all sparkling and still wine transported by the transporter during the month for which the report is made. Each report shall contain, at a minimum, the following for every shipment:

1. date of shipment;

2. name of shipper;

3. address of shipper;

4. name of recipient;

5. address of recipient;

6. tracking identification number;

7. date of delivery;

8. total package weight;

9. quantity of each shipment; and

10. volume of sparkling or still wine shipped (in milliliters or liters).

K. If no shipments were made by a transporter for a month, the transporter must submit a report to the commissioner stating that no such shipments were made.

AUTHORITY NOTE: Promulgated in accordance with R.S. 15:541.1.

HISTORICAL NOTE: Promulgated by the Department of Revenue, Office of Alcohol and Tobacco Control, LR 43:1556 (August 2017).

§337. Online Grocery Pickup

A. Retail dealers shall not operate an online grocery pickup of alcoholic beverage products except where expressly authorized in writing by the commissioner.

B. A retail dealer shall designate a special area for online grocery pickup whereby orders placed online that includes any alcoholic beverage products shall be placed in a bin located within the designated OGP holding area.

C. All online orders containing alcoholic beverage and non-alcoholic beverage items must be segregated whereby all alcoholic beverage products are to be placed in separate bags distinctly labeled "ALCOHOL."

D. A server who is solely responsible for completing online grocery pick-up shall be 21 years of age or older and shall be required to attend an approved server training course prior to employment. Server shall be designated as a curbside associate.

E. A retail dealer shall provide proper training to any and all curbside associate(s). Such training shall require a curbside associate to verify online orders, retrieve purchased products from the bin located in the OGP designated area, and verify proper identification prior to completion of OGP transaction.

F. Server or curbside associate shall make direct contact with customer and verify the customer's age with the customer's identification card which shall on its face establish the age of the person as 21 years old or older and that there is no reason to doubt the authenticity or correctness of the identification.

G. Retail dealer shall maintain an ATC-approved handheld identification device that shall by utilized by the server or curbside associate to assist in identifying the customer's proper age prior to completion of all OGP orders.

H. The OGP hours shall be limited only during retail dealer's regular hours of operation. Online ordering and pickup shall only be available between 8 a.m. to 10 p.m.

I. OGP orders with alcoholic beverage products shall have a minimum total OGP purchase price of $30 and shall not be comprised solely of alcoholic beverage products.

J. Holder of a class A or class C permit is prohibited from providing OGP services.

AUTHORITY NOTE: Promulgated in accordance with R.S. 15:541.1.

HISTORICAL NOTE: Promulgated by the Department of Revenue, Office of Alcohol and Tobacco Control, LR 43:1557 (August 2017).

Chapter 4. Alcohol Public Safety Regulations

§401. Digitized Identification Acceptance and Education

A. LA Wallet digitized identification shall be the only digital identification that may be accepted by alcohol and tobacco retailers.

B. Alcohol and tobacco retailers may choose to accept digitized identification or they may still require a physical identification when checking identification.

C. Retailers whom the agency has required to utilize scanners shall still be required to request and scan a physical identification and may not accept digitized identification.

D. Digitized identification may be accepted by establishments provided that all employees have been properly trained prior to acceptance. Establishments which intend to accept digital identification shall conduct their own employee training and provide the following information to all employees prior to acceptance:

1. Hands-off/No-touch. Digitized identification was designed so that anyone validating or verifying the information on the holder's device may do so without handling the device. All interactive features are to be completed by the holder of the device with the digitized identification application and not by the retailer.

2. Validity of Digitized Identification. The validity of digitized identification may easily be determined by the green or red line across the top of the electronic license. This line will read "VALID" or "INVALID", respectively. If the license has not been suspended, revoked, or been determined invalid for any other reason, the word "VALID" shall be displayed in green.

3. Over 21/Under 21 Orientation. The age of the digitized identification holder may be determined by the orientation of the digital identification. For individuals over the age of 21 years old, the license will be displayed horizontally on the holder's electronic device. For individuals under the age of 21 years old, the license will be displayed vertically on the holder's electronic device.

4. Refresh Button. The digitized identification application shall contain a "refresh" button which acts as an interactive safeguard. This button enables the holder of the device to contact the Department of Motor Vehicles and re-validate the license, usually in less than three seconds. The time of the last update will be displayed next to the license, above the refresh button. Retailers are encouraged to require the holder of the digitized identification to refresh their identification to aid in determining authenticity.

5. Security Seal. If the retailer requires further validation of the digitized identification, the retailer may ask the holder of the digitized identification to press and hold their finger on the identification displayed on their device screen to reveal the security seal. Retailers are encouraged to require the holder of the digitized identification to display the security seal to aid in determining authenticity.

6. View Button. If the retailer needs to view the date of birth more clearly to verify, the digitized identification application is equipped with a "view" button which may be activated by the holder of the digitized identification. When the holder activates the "view" button, the device application will then display a larger print version of the holder's identification number, date of birth, endorsements, and restrictions.

7. All other rules and requirements for physical identification still apply for digitized identification.

AUTHORITY NOTE: Promulgated in accordance with R.S. 26:922.

HISTORICAL NOTE: Promulgated by the Department of Revenue, Office of Alcohol and Tobacco Control, LR 45:74 (January 2019).

§403. Governmental Entity Special Events

A. The commissioner shall have the authority to issue alcohol and tobacco special event permits to governmental entities, quasi-governmental entities, quasi-governmental development districts, and their agents and assigns. Special event permits issued to governmental entities, quasi-governmental entities, and quasi-governmental development districts, shall be classified as Type B Special Events pursuant to R.S. 26:793(A)(1)(c) and LAC 55:VII.323(B)(1)(b). Special event permits issued to the agents and assigns of governmental entities, quasi-governmental entities, and quasi-governmental development district shall be classified as Type C Special Events pursuant to R.S. 26:793(A)(1)(d) and LAC 55:VII.323(B)(1)(c). Special event permits issued to governmental entities, quasi-governmental entities, quasi-governmental development districts and their agents and assigns shall not be subject to the twelve special event permit per year limitation imposed on non-governmental entities. The agents and assigns of governmental entities, quasi-governmental entities, and quasi-governmental development district shall still be restricted to 12 special events for those events wherein they are not acting as an agent or assign of a governmental entities, quasi-governmental entities, or quasi-governmental development district

AUTHORITY NOTE: Promulgated in accordance with R.S. 26:793(A)(4) and R.S. 26:922.

HISTORICAL NOTE: Promulgated by the Department of Revenue, Office of Alcohol and Tobacco Control, LR 45:75 (January 2019).

§420. Low Alcohol Content Beverages, Malt Beverages and Ciders—Handling, Stocking, Pricing, and Rotating

A. Persons holding valid Louisiana wholesale beverage alcohol permits, their agents, servants or employees, manufacturers' agents, importers and brokers may price, stock and rotate merchandise at retail premises only to the following extent.

1. Dealers in beverages of not more than 6 percent alcohol by volume, malt beverages or ciders may handle, build and stock displays of their product on the premises of retail dealers.

2. All dealers in beverages of not more than 6 percent alcohol by volume, malt beverages and ciders are prohibited from requiring other dealers to provide services including stocking, rotating, and frequency in delivery of product. Wholesale dealers are prohibited from pricing, and affixing security tags on product at a retail outlet.

3. Except as authorized under this Chapter, employees of a wholesale dealer shall not, in connection with the sale or delivery of alcoholic beverages to a retail dealer, provide any services whatsoever to a retail dealer.

B. The commissioner of the Office of Alcohol and Tobacco Control may seek a suspension or revocation of the permit or permits of a violator and may impose such other penalties or administrative remedies as are prescribed by law for violators of the Alcoholic Beverage Control Law.

AUTHORITY NOTE: Promulgated in accordance with R.S. 26:922.

HISTORICAL NOTE: Promulgated by the Department of Revenue, Office of Alcohol and Tobacco Control LR 45:1083 (August 2019).

Chapter 5. Responsible Vendor Program

§501. Purpose

A. The Responsible Vendor Program is intended to educate vendors and their employees and customers about selling, serving, and consuming beverage alcohol, tobacco, and tobacco products. Chapter 5 relates to the development, establishment, and maintenance of the program.

AUTHORITY NOTE: Promulgated in accordance with R.S. 26:931 et seq.

HISTORICAL NOTE: Promulgated by the Department of Revenue, Office of Alcohol and Tobacco Control, LR 24:702 (April 1998), amended LR 24:1949 (October 1998).

§503. Definitions

A. For purposes of this Chapter, the following terms are defined.

Approved Provider—an individual, unincorporated association, partnership, or corporation approved by the program administrator to provide server or security personnel training courses.

Commissioner—the commissioner of the state Office of Alcohol and Tobacco Control.

Program Administrator—a committee or board of nine persons that shall develop and administer the Responsible Vendor Program.

Responsible Vendor—any vendor who qualifies and maintains certification in the Responsible Vendor Program.

Responsible Vendor Handbook—the handbook that is developed, published, and distributed by the program administrator and approved by the commissioner.

Server—any employee of a vendor, other than security personnel, who is authorized to sell or serve beverage alcohol, tobacco, and tobacco products in the normal course of his or her employment or deals with customers who purchase or consume beverage alcohol, tobacco or tobacco products.

Server Permit—the permit issued to a server or security personnel upon completion of all required server or security personnel training and all refresher courses.

Security Personnel – any person other than a server who monitors the entrance and other areas of an establishment for purposes of identifying underage and intoxicated persons, enforcing establishment rules and regulations and otherwise providing security for the establishment and its customers where alcoholic beverages are the principle commodity sold for consumption on the premises. “Security Personnel” shall not include persons employed by hotels or motels which consist of sleeping rooms, cottages, or cabins unless the person works primarily in an area on the licensed premises of a hotel or motel where the principle commodity sold is alcoholic beverages for consumption on the licensed premises.

Trainer—an individual employed or authorized by an approved training provider to conduct an alcohol server education course wherein the successful completion of the course by the student will result in the issuance of a server permit.

Vendor—any holder of a state Class A—General, Class A—Restaurant, or Class B—Retail permit.

AUTHORITY NOTE: Promulgated in accordance with R.S. 26:931 et seq.

HISTORICAL NOTE: Promulgated by the Department of Revenue, Office of Alcohol and Tobacco Control, LR 24:1949 (October 1998), amended LR 31:939 (April 2005), LR 39:1827 (July 2013).

§505. Vendors

A. Certification and Enrollment as a Responsible Vendor

1. The vendor shall review and understand the vendor handbook.

2. The vendor shall provide the Office of Alcohol and Tobacco Control with a completed "vendor affidavit" for enrollment in the program.

3. The vendor shall require all “servers” and “security personnel” to attend an approved server or security personnel training course within 45 days of the first day of employment.

4. The vendor shall pay an annual fee of $50 per licensed establishment holding a Class A-General, Class A-Restaurant, or Class B-Retail permit for the purpose of funding development and administration of the Responsible Vendor Program.

a. The fee shall be assessed on all new and renewal applications for retail permits to engage in the business of dealing in alcoholic beverages and/or tobacco and tobacco products.

b. The fee shall not be assessed to those parties seeking a Special Event Permit under the provisions of R.S. 26:793(A).

B. Maintaining Certification

1. The vendor shall keep the vendor handbook current with all updates and periodic amendments distributed by the program administrator.

2. The vendor shall provide new employees already licensed under the Responsible Vendor Program with the rules and regulations applicable in the parish or municipality of the establishment's location.

3. The vendor shall maintain server and security personnel training records, which include the name, date of birth, last four digits of Social Security number, and date of hire for all servers and security personnel. The records shall be kept on the licensed premises at all times for inspection by agents of the Office of Alcohol and Tobacco Control or other peace officers.

4. The vendor shall post signs on the licensed premises informing customers of the vendor's policy against selling alcoholic beverages or tobacco products to underage persons if required by law.

AUTHORITY NOTE: Promulgated in accordance with R.S. 26:931 et seq.

HISTORICAL NOTE: Promulgated by the Department of Revenue, Office of Alcohol and Tobacco Control, LR 24:1949 (October 1998), amended LR 25:879 (May 1999), LR 31:939 (April 2005), LR 39:1827 (July 2013), LR 40:1113 (June 2014).

§507. Servers and Security Personnel

A. Server and security personnel applicants with special needs, such as an inability to read or write in English, hearing impairment, etc., shall contact the approved training provider at least one week before the alcohol server or security personnel training course to request specific assistance in completing the course. Notwithstanding any other provisions of Chapter 5, the approved provider and the program administrator shall attempt to provide reasonable accommodation when requested in compliance with the state and federal law.

B. Server and Security Personnel Permit

1. Server and security personnel permits shall be valid for four years from the completion of an approved responsible vendor training course.

2. Whenever a server or security personnel is employed in the service of alcohol, their permit and one legal form of picture identification shall be available on the premises for inspection by agents of the Office of Alcohol and Tobacco Control or other peace officers.

3. A server's or security personnel’s refusal or failure to make their permit available on the premises for immediate inspection by authorized agents or peace officers shall be evidence of a violation of this Section.

C. Server or Security Personnel Permit Verification. The Office of Alcohol and Tobacco Control shall maintain a list of currently certified servers and security personnel by name, permit number, and date of birth, so that vendors can verify the validity of the servers’ and security personnel’s permits.

D. Permit Expiration, Renewal and Lost Permits

1. Every server and security personnel permit shall expire on the last day of the month, four years after the month that the server or security personnel successfully completed the applicable responsible vendor server or security personnel course.

2. To be eligible for renewal of a server or security personnel permit, the server or security personnel shall attend and successfully pass an approved abbreviated renewal responsible vendor course and examination given by an approved provider.

3. Lost permits shall be canceled and a replacement issued by the Office of Alcohol and Tobacco Control after the server or security personnel submits an affidavit of lost permit and a $5 fee.

E. Illegal Possession of a Permit. Any person who falsifies, keeps, or possesses a server permit contrary to the provisions of this Chapter shall be guilty of a violation of this Chapter.

F. Server and Security Personnel Liability: Penalties, Fines, Suspension, or Revocation of Server or Security Personnel Permit. Notwithstanding any criminal actions taken, the commissioner may issue administrative violations notices to any holder of a server permit for noncompliance with this Chapter or for any violations, attributable to the server or security personnel, of Title 26 of the Louisiana Revised Statutes.

AUTHORITY NOTE: Promulgated in accordance with R.S. 26:931 et seq.

HISTORICAL NOTE: Promulgated by the Department of Revenue, Office of Alcohol and Tobacco Control, LR 24:1950 (October 1998), amended LR 31:939 (April 2005), LR 39:1827 (July 2013).

§509. Training: Provider and Trainers

A. Trainer Certification. Approved providers shall only contract with trainers that have any combination of a minimum of two years of:

1. verified full-time employment in the fields of training, education, law, law enforcement, certified security services, substance abuse rehabilitation, the hospitality, retail industry that involved the sale or service of alcohol or tobacco products; or

2. post-secondary education in the fields of training, education, law, law enforcement, certified security services, substance abuse rehabilitation, the hospitality or retail industry that involved the sale or service of alcohol or tobacco products.

B. Provider Certification

1. Classroom Training Provider: A person or business entity that applies to become an approved provider for alcohol and tobacco server or security personnel classroom training shall submit the following to the program administrator:

a. a completed application form provided by the program administrator;

b. a copy of the lesson plans, audio, visual, and printed materials provided as part of the alcohol server training course;

c. a copy of the examinations;

d. the names, date of birth, last four digits of Social Security numbers, addresses and phone numbers, and educational and employment backgrounds of all trainers to be used in teaching the course; and

e. notification of any changes within 30 days of hiring, contracting with, or termination of any trainers.

2. Computer-Based Training Provider. A person or business entity that applies to become an approved provider for alcohol and tobacco server computer based education shall submit the following to the program administrator:

a. a completed application forms provided by the program administrator;

b. the names, dates of birth, last four digits of Social Security numbers, addresses and phone numbers, and educational and employment backgrounds of all persons engaged in the development/creation of the online (computer-based) training course;

c. a copy of the complete online (computer-based) alcohol and/or tobacco server training course;

i. the presentation and course progress platform used by a computer-based provider must be reviewed and approved by the program administrator to ensure that the course of instruction contains all topics required by the mandatory curriculum;

d. a copy of the examination and item bank;

e. verification that the security measures implemented and maintained by the provider meet state and federal standards for the transmission and protection of personal identification information and financial information of individuals accessing the website;

f. a detailed description of the provider's system to verify a student's identity;

g. approved providers for computer-based training shall make a representative available to provide information and/or technical support during standard business hours via the internet, telephone, or other method as approved by the program administrator;

h. approved providers for computer-based training must submit to audits by the Office of Alcohol and Tobacco Control for the purpose of ensuring compliance and to review and examine the following:

i. number of server courses that have been issued by the provider;

ii. security measures taken in relation to the course examination;

iii. procedures used to score the course examination;

iv. size of the examination bank to generate examination questions;

v. methodology used to translate the course and examination in multiple languages and the name and qualifications of the translator service provider;

vi. integrity of the program data generated and stored by the approved provider;

vii. program's data handling, reporting and archiving capacities, policies and procedures;

viii. approved provider's anti-discrimination policy and procedures;

i. access to the provider's web address and secured portal must be made available to the Office of Alcohol and Tobacco Control and the entire course of instruction offered to servers must be provided free of charge to the Office of Alcohol and Tobacco Control;

j. notification within 30 days of any changes in the provider's ownership or system operations;

k. approved classroom training providers shall obtain approval to become a computer-based provider by submitting a separate application and all additional information required in this section;

l. computer-based training providers are exempt from the provisions of LAC55:VII.511.K requiring seven days notice of scheduling courses;

m. computer-based training providers shall adhere to the provisions of LAC55.VII.509.E.1 requiring submission of class rosters within 10 days of nay training course.

3. After the program content or method of presentation has been approved by the program administrator, the provider shall notify and obtain approval of any changes from the program administrator.

C. the alcohol and tobacco server and security personnel permits issued to students who successfully complete the server and security personnel training programs shall be obtained from the Office of Alcohol and Tobacco Control or its designee.

D. Denial or Recision of Program Approval

1. The program administrator may deny or rescind approval of any program if any of the following is found:

a. the program does not meet the minimum course standards set out in Chapter 5;

b. the Application for Program Certification is not correct or complete;

c. any trainer has been convicted of a felony or of a misdemeanor related to theft, fraud, or misrepresentation and it has been less than three years since the discharge of the sentence imposed as a result of the conviction; or

d. any trainer has been convicted of operating a vehicle while intoxicated at the time they were employed as a trainer and it has been less than one year since the discharge of the sentence imposed as a result of the conviction.

2. Within 10 days after receipt of the notice that the program approval has been denied or rescinded, the applicant has the right to request a hearing before the program administrator.

3. If the applicant fails to request a hearing, the right to a hearing is waived and the program administrator's decision is final.

4. The notice that the program approval has been denied or rescinded shall be served by either certified mail or personal service at the applicant's main office to any adult agent or employee or to its registered agent.

E. Provider and Trainer Records—Rights of Inspection

1. Within 10 days of any training course, the approved provider shall submit to the Office of Alcohol and Tobacco Control a report of the server or security personnel training that includes the following:

a. the name, last four digits of Social Security number, permit number, address, telephone number, and date of birth of each student that completed the training course and passed the required examination;

b. the name of the trainer or training provider that provided the course and the trainer's signature and verification that each student listed has successfully completed the approved course on the date indicated and any other facts as the program administrator or agents or employees of the Office of Alcohol and Tobacco Control may require.

2. Copies of the examinations and permits shall be kept for four years from the date of issue at the approved provider's place of business available for inspection and copying by agents or employees of the Office of Alcohol and Tobacco Control.

3. The approved provider shall maintain for four years from the date the class was conducted, the course information, which includes the class location, date, and time; trainer's name; and the student's names, last four digits of Social Security number and permit number. These records shall be maintained at the approved provider's place of business available for inspection and copying by agents or employees of the Office of Alcohol and Tobacco Control.

F. Approved Provider Minimum Course Standards. To be certified to issue a server or security personnel permit, the provider's course of instruction must include the subject areas specified in R.S. 26:933(C) in accordance with LAC 55:VII.511.

G. Approved Server and Security Personnel Training Course Fees. Approved providers may charge fees for the cost of conducting the approved server or security personnel training courses. The fees for classroom or computer-based instruction and examination shall be approved by the program administrator and the commissioner and may not exceed $25.

H. Sanctions against Approved Providers and Trainers. Any approved provider or trainer who violates any of the provisions of Title 26 of the Louisiana Revised Statutes or any of the requirements of Chapter 5 shall:

1. for a first offense receive a notice of intended suspension or revocation of the program administrator's certification or authorization, with 30 days allowed to correct any violations. If the violation is rectified no further action will be taken;

2. if the violation is not rectified or a second violation by the provider or their trainer occurs, the program administrator or their designee shall suspend approval and certification of the provider or trainer for a period not to exceed six months. Before the suspension will be lifted, the provider or trainer shall correct all violations;

3. the program administrator or their designee may increase sanctions based on successive violations within a two-year period. Numerous violations within a two-year period may indicate disregard for the law or failure to provide an acceptable responsible vendor server or security personnel program so as to warrant cancellation of the certification of either the provider or their trainer.

I. Approved Provider Responsible for Acts of Trainers. The program administrator may hold a provider responsible for any act or omission of the provider's program, personnel, trainers, or representatives that violate any law or administrative rule pertaining to approved providers' privileges.

J. Prohibited Conduct. No approved provider or authorized trainer shall:

1. make any false or misleading statement to induce or prevent the program administrator's actions;

2. falsify, alter or otherwise tamper with responsible vendor server or security personnel permits or records;

3. permit a student to refer to any written material or have a discussion with another person during the exam unless the instructor authorizes the student to use an interpreter;

4. permit any student to drink alcoholic beverages or to be under the influence of intoxicants during the course presentation or examination, including breaks;

5. drink alcoholic beverages or be under the influence of intoxicants during the course presentation or examination, including breaks;

6. prohibit, interfere, or fail to assist the program administrator or their designee with scheduling or attendance of on-site observations.

K. Approved Provider and Trainer Advertising and Promotion Standards

1. Approved provider and trainer advertising related to the responsible vendor server and security personnel training courses shall include:

a. the approved provider's or trainer's telephone number and cancellation policy;

b. the total amount of course time that includes instruction, examination and breaks;

c. a statement that students shall attend the entire course before taking the examination.

2. Advertising shall not suggest that the state of Louisiana, the program administrator, or any state agency endorses or recommends the approved provider's program to the exclusion of any other program.

3. Upon request, the approved provider or trainer shall give the program administrator copies of the program publications, brochures, pamphlets, scripts, etc. or any other representation of advertising materials related to the program.

4. An approved training provider or trainer must have records available to support all advertising claims or representations.

AUTHORITY NOTE: Promulgated in accordance with R.S. 26:931 et seq.

HISTORICAL NOTE: Promulgated by the Department of Revenue, Office of Alcohol and Tobacco Control, LR 24:1950 (October 1998), amended LR 31:939 (April 2005), LR 39:1828 (July 2013), LR 40:1114 (June 2014).

§511. Responsible Vendor Program Minimum Course Standards

A. Classroom Instruction

1. Alcoholic Beverage and Tobacco Products Classroom Training—must include at least two hours of classroom instruction, exclusive of breaks and examination time, presented in a continuous block of instruction. Classes shall be limited to no more than one 10-minute break per hour.

2. Tobacco Products—must include at least one hour of classroom instruction, exclusive of breaks and examination time, presented in a continuous block of instruction.

B. Computer Based Instruction

1. Alcoholic Beverage and Tobacco Products Online Training—must include:

a. A secure log in and data transfer process to ensure security:

i. a unique log in is required for each server or security personnel that only allows that server or security personnel to access course and exam;

ii. server or security personnel shall not be able to modify first name and last name on user profile;

iii. server or security personnel provides data required by the ATC to issue permits;

iv. encryption, secure socket layer (SSL) or like, for personal information data transfer between website forms and database;

b. course and exam access information is provided to server or security personnel via email and/or directly after point of purchase;

c. online course shall automatically log users out after a minimum of 30 minutes of inactivity. Server or security personnel must be able to start where they left off;

d. online course shall provide a minimum of two hours of course instruction;

e. linear navigation requires participant to view all modules in course. Each the screen or module must be completed before proceeding to the next;

f. servers or security personnel cannot take the exam until the course has been fully completed;

g. a provider shall take extra measures to ensure to deter fraud and verify the identity of each student. Ways to prevent fraudulent course and test taking shall include, but are not limited to:

i. obtaining the log-in and log-off times;

ii. discontinuing an examination if it stays idle after a minimum period of 10 minutes of inactivity;

iii. asking each student personal identifying questions:

a). the server or security personnel must be asked a minimum of ten personal identifying questions before starting the exam;

b). server or security personnel must answer correctly a minimum of 5 randomly selected personal validation questions throughout the exam;

h. exam must be completed in one sitting. If Server or security personnel logs out, server must start over at the beginning of the exam;

i. the time allotted to take the examination shall not exceed 90 minutes;

j. if the time limit is exceeded or personal validation questions are answered incorrectly, the exam shall be reset and server must start over at the beginning of the exam;

k. server or security personnel must enter same exam access information to restart exam after exit;

l. server or security personnel will be allowed two exits from the exam before being locked out. The provider shall take sufficient measures to allow a student to re-access a previously started exam in the case of inadvertent logout;

m. approved providers must rotate the exam questions on a regularly scheduled basis to ensure exam security and validity;

n. the exam must include the 10 required Louisiana responsible vendor questions and then a minimum of 15 questions developed by the provider. The exam provider shall provide a bank from which the provider questions are taken which shall have a minimum of three times the number of items as the number of questions on the exam;

o. a server or security personnel must have adequate access to help desk/customer service during standard business hours to resolve technical issues without delaying the flow of instruction or examination;

p. no provider-based advertisements shall appear during the course of instruction and examination.

C. The approved server or security personnel training course shall be presented in its entirety to each student in a language approved by the program administrator.

D. Each server or security personnel training course must include an examination approved by the program administrator, which is administered by the trainer immediately following the course presentation. Students shall take the examination in writing, unless special circumstances require an oral examination. With the approval of the program administrator, the test may be offered in a language best understood by the student, or bilingual trainers may, in response to direct inquiries, clarify test questions using another language. Each student shall correctly answer at least 70 percent of the examination questions. Students who receive failing scores may be retested once at a time and place to be determined by the trainer. Otherwise, students must repeat the full course for an additional fee.

E. All training facilities shall meet the requirements of the Americans with Disabilities Act (ADA) and shall have adequate lighting, seating, easily accessible restrooms, and comfortable room temperature.

F. At the beginning of each server or security personnel training course, the trainer shall give each student:

1. an enrollment agreement that clearly states the obligations of the trainer and student, refund policies, and procedures to terminate enrollment;

2. a notice that a student must complete the course in order to take the examination;

3. a server training and/or a security personnel training workbook, approved by the program administrator, that is current, complete, and accurate. The workbook shall include an outline of the minimum course curriculum, table of contents, titles, subheadings, and page numbers. Physical specifications must meet the following minimum standards:

a. minimum dimensions of paper size must be 8 1/2 by 11 inches;

b. paper stock, excluding front and back cover, shall be white or near white, and of a quality and weight suitable for reproduction and note-taking with no ink bleed through;

c. type must be a minimum of 11-point in a type style commonly used for textbooks and periodicals;

d. binding must firmly hold the pages together in correct order and be sufficient for use during the course and as a reference;

e. professional printing and typesetting are not required, but reproductions must be clear, readable, and letter quality;

f. for ease of reading and adequate room for note-taking, white space must be a minimum of 30 percent per page with the print or copy to be no more than 70 percent of the page.

g. each student must be provided a copy of the applicable training workbook(s), in either paper or electronic format, that the student retains upon completion of sever and/or security personnel training course.

G. No server or security personnel training class shall include more than 100 students and students that arrive more than 15 minutes after the class begins shall not be admitted.

H. The classroom presentation must be consistent with the approved program.

I. Discussions must be pertinent to responsible beverage alcohol or tobacco sales, service, and consumption.

J. The program administrator or their designee may attend any class or computer-based course to evaluate conformance with the program certified by the program administrator.

K. At least seven days in advance, the approved provider or their authorized trainers shall give written notice to the Office of Alcohol and Tobacco Control of the date, time, and location of all courses scheduled. The Office of Alcohol and Tobacco Control shall be notified by phone or fax of course cancellations prior to the course date except when cancellation cannot be anticipated, in which case notification shall be within three business days of the scheduled course date.

L. Minimum Course Standards for Alcoholic Beverage and Tobacco Product Server Training Courses. To be certified to issue a server permit, the provider's course of instruction shall include the subject areas specified in R.S. 26:933(C), as well as the following.

1. Introduction:

a. brief review of the law creating the Louisiana Responsible Vendor Program, which shall include when the program was enacted, who is required to participate and how, when it becomes mandatory, nature of permits issued to server, when server permits expire, obligation of server to attend a course every two years, and server renewal procedures;

b. objectives of the Responsible Vendor Program, which shall include education of vendors, servers, and their customers about responsible sales, service, and consumption of alcohol and tobacco; and prevention of the misuse, illegal use, and abuse of alcohol.

2. Alcoholic beverage and tobacco products course:

a. classification of alcohol as a depressant and its effect on the human body, particularly on the ability to drive a motor vehicle:

i. alcohol is a depressant not a stimulant;

ii. how alcohol travels through the body, including how quickly it enters the bloodstream and reaches the brain;

iii. alcohol's effect on a person's ability to drive a motor vehicle, specifically reviewing alcohol's effect on a person’s behavior, self-control, and judgment;

iv. outline of Louisiana's driving while intoxicated laws and penalties for violations;

b. effects of alcohol when taken with commonly used prescription and nonprescription drugs:

i. mixing alcohol with other drugs can produce dangerous side effects. It is especially dangerous to drive under the influence of alcohol and other drugs because of the increased impairment due to both;

ii. alcohol and other depressant drugs. Mixing alcohol with other depressants dangerously increases the depressant effect on the body;

iii. alcohol and stimulants. Stimulants do not cancel the intoxication and impairment due to alcohol;

iv. alone, many prescription and nonprescription drugs impair the ability to drive a motor vehicle;

v. the effects of commonly used prescription and nonprescription drugs;

vi. review of the effects of contemporary designer drugs such as GHB and Rohypnol;

c. absorption rate, as well as the rate at which the human body can dispose of alcohol and how food affects the absorption rate:

i. rate at which the human body absorbs alcohol;

ii. blood alcohol concentration (BAC) and how to estimate a person's BAC. Include drink equivalency guidelines;

iii. how the human body disposes of alcohol;

iv. the effect of food on the absorption rate;

v. time is the only real factor that reduces intoxication;

d. methods of identifying and dealing with underage and intoxicated persons, including strategies for delaying and denying sales and service to intoxicated and underage persons:

i. procedures and methods for detecting false identification;

ii. procedures and methods for denying service or entry to underage persons;

iii. procedures and methods for identifying intoxicated persons including behavioral warning signs and other signs of impairment;

iv. procedures and methods for preventing over intoxication;

v. procedures and methods for terminating service to intoxicated persons;

e. state laws and regulations regarding the sales and service of alcoholic beverages for consumption on or off premises:

i. legal forms of identification in Louisiana;

ii. legal age to purchase, possess, and consume alcohol and penalties for violation;

iii. legal age to enter licensed premises and penalties for violation;

iv. legal age to be employed by a vendor and penalties for violation;

v. acts prohibited on licensed premises and penalties for violation;

f. parish and municipal ordinances and regulations that affect the sale and service of alcoholic beverages for consumption on or off the licensed premises. These provisions will depend on the jurisdiction of the servers attending the class and may vary according to the parish and municipality:

i. legal hours of operation and Sunday sales;

ii. noise, litter, and zoning;

iii. leaving premises with alcohol;

iv. preemption of parish and municipal server training courses;

v. parish or municipal server licensing requirements;

vi. other relevant regulations;

g. state and federal laws and regulations related to the lawful age to purchase tobacco products and age verification requirements:

i. state and federal legal purchasing age;

ii. federal age verification requirements;

iii. state and federal laws and regulations related to vending machines;

iv. state laws related to sign posting requirements;

v. state laws related to minimum packaging requirements.

3. Tobacco Products Course

a. Outline and review of all relevant changes to local, state, and federal laws, rules and regulations affecting the retail operation of tobacco businesses. With regard to local laws, rules and regulations, each approved provider shall determine the changes for each jurisdiction in which it offers Tobacco courses and submit their local tobacco curriculum to the program administrator for approval;

b. state and federal laws and regulations related to the lawful age to purchase tobacco products and age verification requirements:

i. state and federal legal purchasing age;

ii. federal age verification requirements;

iii. state and federal laws and regulations related to vending machines;

iv. state laws related to sign posting requirements;

v. state laws related to minimum packaging requirements;

c. state laws and regulation regarding the sales and service of tobacco products:

i. legal form of identification in Louisiana;

ii. procedures and methods for detecting false identification;

d. guidelines for prevention of tobacco use and addiction:

i. health risks;

ii. addiction problems with adolescents;

iii. health effects of smoking among young people;

e. what you should know about tobacco:

i. tobacco and athletic performance;

ii. tobacco and personal appearance;

f. state laws and regulations regarding the sales and service of the Louisiana Lottery Corporation Law:

i. a review of the Louisiana Lottery Corporation Law, which shall include when it was established;

ii. legal age to purchase a lottery ticket and penalties for violation;

iii. legal age to claim a lottery ticket;

iv. legal age to sell lottery ticket;

v. advertisement;

g. parish and municipal ordinances and regulations that affect the sale and service of tobacco products. These provisions will depend on the jurisdiction of the servers attending the class and may vary according to the parish and municipality.

M. Minimum Course Standards for Security Personnel Training Courses. To be certified to issue a server permit for security personnel, the provider's course of instruction shall include the subject areas specified in R.S. 26:933(C) and (D) and the minimum course standards specified on subsection L of these regulations as well as the following:

1. A description of the role and duties of security personnel that includes the responsibility to monitor the entrance and other areas of an establishment for purposes of identifying underage and intoxicated persons; to enforce the establishment's rules; and to otherwise provide security for the establishment and its customers.

2. A review of the skills that make security personnel more effective including communication skills, self-control, posture, confidence, physical fitness and knowledge of certain laws.

3. Techniques to identify and handle disruptive customers and customer altercations including but not limited to:

a. description of common types of disturbances;

b. techniques to identify and manage potentially disruptive customers;

c. proper procedures to employ when removing a disruptive customer from the premises including common mistakes to avoid; and

d. identification and description of the types of resistance security personnel may encounter when dealing with disruptive customers.

4. Description and review of proper restraint techniques and when to use such techniques including the following:

a. description and review of "positional asphyxia" including techniques to manage "positional asphyxia"; and

b. description and review of "excited delirium" including techniques to manage "excited delirium."

5. Identification and review of state laws related to the duties and responsibilities of security personnel including:

a. simple, second degree and aggravated battery;

b. simple and aggravated assault;

c. false imprisonment;

d. simple and aggravated criminal damage to property;

e. entry on or remaining in places or on land after being forbidden;

f. simple, second degree and armed robbery; and

g. disturbing the peace.

N. Minimum Standards and Certification for an Abbreviated Renewal Course

1. To be certified to conduct abbreviated renewal server training courses, the approved provider's course of instruction shall include the following.

a. An Outline and Review of All Relevant Changes to Local, State, and Federal Laws, Rules and Regulations Affecting the Retail Operation of Alcohol Beverage and or Tobacco Businesses. With regard to local laws, rules and regulations, each approved provider shall determine the changes for each jurisdiction in which it offers abbreviated renewal courses and submit their local renewal course curriculum to the program administrator for approval.

b. Statistics Related to Drunk Driving Arrests, Accidents and Fatalities in Louisiana. The approved provider shall incorporate the statistics into their abbreviated renewal course curriculum in the same form and content that it is provided by the program administrator and compiled from the most current annual report of the Louisiana Highway Safety Commission or National Highway Traffic Safety Administration.

c. Techniques to Prevent Persons Suspected of Being Intoxicated from Operating Motor Vehicles.

d. Any Other Information Relevant to the Prevention of Drunk Driving.

e. Information Concerning Societal and Health Concerns Related to the Use of Tobacco Products.

2. All abbreviated renewal course program content and method of presentation shall be approved by the Program Administrator prior to conducting any abbreviated renewal server training courses.

3. All abbreviated renewal server training courses shall include at least one hour of classroom instruction exclusive of breaks and examination time, and shall be presented in a continuous block of time.

4. Each abbreviated renewal server training course shall include an examination approved by the program administrator.

5. Prior to teaching an abbreviated renewal server training course, the trainer must receive proof of prior training from the server. This proof may consist of a server permit not having expired for longer than one year, or any other proof deemed valid by the discretion of the trainer.

6. Unless otherwise provided for in this Subsection, all other regulations applicable to regular server training courses shall apply to renewal server training courses.

AUTHORITY NOTE: Promulgated in accordance with R.S. 26:931 et seq.

HISTORICAL NOTE: Promulgated by the Department of Revenue, Office of Alcohol and Tobacco Control, LR 31:940 (April 2005), amended LR 39:1828 (July 2013).

Chapter 7. Live Entertainment

§701. Prohibited Acts

A. Notwithstanding any provisions of R.S. 26:90(D) and (E) and R.S. 26:286(D) and (E) to the contrary, live entertainment shall be permitted on any licensed premises except that no permittee shall permit any person to perform acts of or act which permit or simulate:

1. sexual intercourse, masturbation, sodomy, bestiality, oral copulation, flagellation, or any sexual acts which are prohibited by law;

2. the touching, caressing or fondling of the breasts, buttocks, anus or genitals;

3. the displaying of the pubic hair, anus, vulva or genitals.

B. Such live entertainers whose breasts or buttocks are exposed to view shall perform only upon a movable or immovable stage at least 18 inches above the immediate floor level. Any provisions of R.S. 26:90 and R.S. 26:286 to the contrary are hereby suspended.

AUTHORITY NOTE: Promulgated in accordance with R.S. 26:793.

HISTORICAL NOTE: Promulgated by the Department of Public Safety, Office of Alcoholic Beverage Control, LR 20:671 (June 1994).

Chapter 8. Direct Delivery of Alcohol Public Safety Regulations

§801. General Direct Delivery Requirements

A. Prior to any alcohol retailer or third party alcohol delivery service engaging in the delivery of alcoholic beverages, same shall obtain an alcoholic beverage delivery permit from the commissioner of the Office of Alcohol and Tobacco Control and shall adhere to the following requirements.

1. Only alcoholic beverages intended for personal consumption and delivered in a manufacturer sealed container may be offered for delivery. *Manufacturer sealed container* as used in this chapter shall mean the original sealed container that is filled with the alcoholic beverage at the permitted facility by the manufacturer as defined in R.S. 26:2(12) and 241(10). The delivery of an *open alcoholic beverage container* as defined by R.S. 32:300 is prohibited;

2. Delivery shall be permitted only in those areas where the sale of alcoholic beverages is permitted. Delivery shall be prohibited in any area where it has been prohibited by a referendum vote or the local governing authority.

3. Delivery by a retailer shall not extend past the boundaries of the parish where the retailer's permitted establishment is located and shall be made only to a

residential or commercial address. Third party delivery radius shall be determined by the parish population. For any parish having a population of less than 100,000 according to the latest federal decennial census, no alcoholic beverages shall be delivered more than 25 miles from the place of purchase. For any parish having a population of greater than 100,000 according to the latest federal decennial census, no alcoholic beverages shall be delivered more than 10 miles from the place of purchase.

4. Orders for alcohol delivery of any type may only be accepted and processed if the permitted premises receiving the order has actual physical possession of the alcoholic beverage being ordered on the physical premises at the time the order is accepted and can fulfilled the order from stock on-hand.

5. The alcoholic beverages of all deliveries which are refused by a third party or incapable of being delivered for any reason shall be returned to the place of purchase.

6. Alcohol beverage delivery permit holders must verify that a consumer placing an order for alcohol delivery is of legal drinking age.

7. Alcoholic beverages shall not be delivered:

a. to an address on the campus of any elementary school, secondary school, university, college, technical college, or institute;

b. to any public playground or building used primarily as a church, synagogue, mosque, or public library;

c. outside of the hour that the retailer's physical premises are open to the public;

d. without verifying that the recipient is not visibly intoxicated;

e. without obtaining the signature of the recipient verifying that the receipt of the delivery of alcohol and their age.

8. Alcoholic beverage delivery permit holders shall keep and retain a record of all deliveries of alcoholic beverages for a period of three years from the date of delivery and shall make such records available to the commissioner of Alcohol and Tobacco Control, and her agents and assigns, upon request. The record of each delivery shall include:

a. the retail dealers name, address, and permit number;

b. the name of the person who placed the order and the date, time, and method of order;

c. the name of the employee or delivery agent making the delivery and the date, time, and address of the delivery;

d. the type, brand, and quantity of each alcoholic beverage delivered; and

e. the name, date of birth, and signature of the person that received the delivery.

9. Parishes and municipalities may require and issue local direct delivery of alcohol permits similar to those issued by the Commissioner of Alcohol and Tobacco Control.

10. All persons delivering alcoholic beverages under an alcoholic beverage permit shall be 21 years of age or older, be the permittee or their employee or agents for which the permittee is required to file an Internal Revenue Service Form W-2 or 1099.

11. Persons delivering alcoholic beverages under an alcoholic beverage delivery permit shall refuse delivery and return the alcoholic beverages to the place of purchase if:

a. the recipient does not produce a valid and current form of identification as identified in Paragraph G.5 of this Section;

b. there is reason to doubt the authenticity or correctness of the recipient's identification;

c. the recipient refuses to sign for the receipt of the delivery; or

d. the recipient is intoxicated.

12. If an alcohol retailer's alcohol permit is revoked, suspended, or lapsed, then that retailer's alcoholic beverage delivery permit shall also be considered to be revoked, suspended, or lapsed and delivery of alcohol beverages shall immediately cease for that particular retailer until permit is deemed valid and current.

13. Third party delivery company or the third party platform shall maintain a commercial general liability insurance policy with a liquor liability endorsement with a minimum coverage amount of $1,000,000 for the duration of the alcoholic beverage delivery permit and they shall provide proof of coverage to the retail dealer and commissioner of Alcohol and Tobacco Control upon request.

14. The permittee shall require all delivery drivers to maintain vehicle general liability insurance on any and all vehicles permittee or its agent may use for deliveries as required by state law for the duration of the alcoholic beverage delivery permit and they shall provide proof of coverage to the commissioner of the Office of Alcohol and Tobacco Control upon request.

15. Class B or class AR retailers who engage the services of third party alcohol delivery service to deliver alcohol for them, must notify the commissioner of the Office of Alcohol and Tobacco Control in writing within 10 days of executing or terminating an agreement with a third party alcohol delivery service to deliver alcohol by providing a copy of the agreement and/or termination notice directly to the agency.

AUTHORITY NOTE: Promulgated in accordance with R.S. 26:307(E).

HISTORICAL NOTE: Promulgated by the Department of Revenue, Office of Alcohol and Tobacco Control, LR 47:80 (January 2021).

§803. Package Store Retail Alcohol Delivery Permit

A. Retailers holding a valid class B retail liquor permit, retailers holding a valid class C retail liquor permit, and retailers holding a valid retail liquor permit that allows for off-premises consumption shall be allowed to apply for, obtain, and maintain a class P retail alcohol delivery permit pursuant to this particular regulation (§803) and they shall adhere to the following requirements in addition to the general requirements otherwise enumerated in this Chapter:

B. The commissioner of Alcohol and Tobacco shall collect the initial and annual licensure fee for class P retail alcohol delivery permits in the amount of $250 and same shall expire and be renewable at the same time as the holder's alcohol permit.

C. Each and every order for the delivery of alcoholic beverages received by a class P retail alcohol delivery permit holder shall include food with each order.

D. All alcohol delivery transactions initiated by a consumer shall be processed, assembled, packaged, and fulfilled at the retailer's permitted physical premises wherein the order was received. All transactions can be processed, assembled, packaged, and fulfilled by the permittee, a W-2 employee of the permittee, a third party, a third party platform, or an authorized agent.

E. Deliveries to consumers shall only be made by the permittee, a W-2 employee of the permittee, a third party, a third party platform, or an authorized agent.

F. Alcoholic beverages shall not be delivered without verifying the identity and age of the recipient by reading a valid state-issued photo identification card, valid military identification card, valid passport of the person, or through the use of a real-time electronic age verification device or application shall be approved by the commissioner of Alcohol and Tobacco Control.

G. Notwithstanding any law, rule, or regulation to the contrary, the permittee may use electronic means to market, receive, and process orders for alcohol products.

H. The permittee may market, receive, and process orders for alcohol products using electronic means owned, operated, and maintained by a third party, provided that:

1. the permittee maintains ultimate control and responsibility over the sales transaction, the transfer of the physical possession of the alcoholic beverages, and the collection and remittance of all applicable state and local taxes;

2. the permittee retains the sole discretion to determine whether to accept and complete an order or reject it and the permittee, or a W-2 employee of the permittee, reviews, and accepts or rejects each order;

3. the permittee retains the independence to determine which alcoholic beverages are made available through electronic means and which alcoholic beverages are made available for delivery to the consumer either at their licensed physical premises itself or at another address designated by the consumer;

4. the permittee independently sets the price of alcoholic beverages being offered for delivery;

5. any credit or debit card information provided by a consumer to the third party for the purpose of transacting a purchase is automatically directed to the permittee such that the transaction takes place between the consumer and the permittee and the permittee appears as the retail dealer at the time of purchase and the receipt;

6. the permittee, or a W-2 employee of the permittee, shall processes at the physical premises that accepted the orders and payments initiated by a consumer;

7. the relationship between the permittee and the third party shall be one of independent contractors and neither party shall be deemed the employee, or joint venture of the other party under any circumstances or for any purposes;

8. the third party shall not deal, handle, sell, offer for sale, or possess for sale alcoholic beverages or process payments for the sale of alcoholic beverages.

AUTHORITY NOTE: Promulgated in accordance with R.S. 26:307(E).

HISTORICAL NOTE: Promulgated by the Department of Revenue, Office of Alcohol and Tobacco Control, LR 47:81 (January 2021).

§805. Restaurant Retail Alcohol Delivery Permit

A. Retailers holding a class AR retail liquor permit shall be allowed to apply for and obtain a class R retail alcohol delivery permit pursuant to this particular regulation (§805) and they shall adhere to the following requirements in addition to the general requirements otherwise enumerated in this Chapter.

B. The commissioner of Alcohol and Tobacco shall collect an initial and annual licensure fee for class R retail alcohol delivery permits in the amount of $250 and same shall expire and be renewable at the same time as the holder's alcohol permit.

C. Only malt beverages, sparkling wine, and still wine, as defined in R.S. 26:2 and 241 may be offered for delivery. No alcohol beverages shall be offered for curbside pickup unless otherwise authorized under law, a separate rule, or guidance. All deliveries containing alcoholic beverages shall also include food. Alcohol and food purchased from a class AR retailer for delivery shall be included in its gross average monthly sales figures for purposes ensuring that an AR retailer meets its 50 percent food or food items requirement under R.S. 26:73(C)(1)(a). However, pursuant to R.S. 26:73(C)(2), sparkling or still wine delivered by the bottle in conjunction with food shall not be considered an alcoholic beverage when determining gross revenue for purposes of R.S. 26:73(C)(1)(a).

D. No alcohol shall be delivered more than 10 miles from the place of purchased for any parish having a population greater than 100,000 according to the latest federal decennial census. Additionally, no alcohol shall be

delivered more than 25 miles from the place of purchase for any parish having a population of less than 100,000 according to the latest federal decennial census.

E. All alcohol delivery transactions initiated by a consumer shall be processed, assembled, packaged, and fulfilled at the retailer's permitted physical premises wherein the order was received by the permittee or a W-2 employee of the permittee.

F. Deliveries to consumers shall be made by the permittee or agents for which the permittee is required to file an Internal Revenue Service Form W-2 or 1099.

G. At the time of delivery of alcoholic beverages, the permittee shall obtain the recipient's signature and verify the age of the recipient through the use of an electronic age verification device or combination of devices that shall be approved by the commissioner of Alcohol and Tobacco Control. Such devices shall be capable of all of the following:

1. verifying proof of age through technology of a magnetic card reader or an alternative technology capable of verifying proof of age;

2. reading a valid state-issued driver's license, a valid state-issued identification card, a valid military identification card, or a valid passport;

3. storing the recipient's name, age, date of birth, the expiration date of the identification, and the date and time that the identification was scanned.

H. Notwithstanding any law, rule, or regulation to the contrary, the permittee may use electronic means to market, receive, and process orders for alcohol products.

I. The permittee may market, receive, and process orders for alcohol products using electronic means owned, operated, and maintained by a third party, provided that:

1. the permittee maintains ultimate control and responsibility over the sales transaction, the transfer of the physical possession of the alcoholic beverages, and the collection and remittance of all applicable state and local taxes;

2. the permittee retains the sole discretion to determine whether to accept and complete an order or reject it and the permittee or agents for which the retailer is required to file an Internal Revenue Service Form W-2 or 1099, shall review and accept or reject each order;

3. the permittee retains the independence to determine which alcoholic beverages ae made available through electronic means and which alcoholic beverages are made available for delivery to the consumer at the licensed physical premises itself or at another address designated by the consumer;

4. the permittee independently sets the price of alcoholic beverages being offered for delivery;

5. any credit or debit card information provided by a consumer to the third party for the purpose of transacting a purchase is automatically directed to the permittee such that the transaction takes place between the consumer and the permittee and the permittee appears as the retail dealer at the time of purchase and a receipt;

6. the permittee, or a W-2 employee of the permittee, processes at the physical premises that accepted the order, all payments initiated by a consumer and assembles, packages, and fulfills each order at the same physical premises;

7. deliveries to consumers shall be made by the permittee or agents for which the retailer is required to file an Internal Revenue Service Form W-2 or 1099.

8. the relationship between the permittee and the third party shall be one of independent contractors and neither party shall be deemed the employee, or joint venture of the other party under any circumstances or for any purposes;

9. the third party shall not deal, handle, sell, offer or sale, or possess for sale alcoholic beverages or process payments for the sale of alcoholic beverages.

AUTHORITY NOTE: Promulgated in accordance with R.S. 26:307(E).

HISTORICAL NOTE: Promulgated by the Department of Revenue, Office of Alcohol and Tobacco Control, LR 47:82 (January 2021).

§807. Third Party Alcohol Delivery Service Permit

A. Third party alcohol delivery service companies desiring to deliver alcohol to consumers in connection with a delivery agreement with a retail dealer possessing valid class AR or B retail permits shall first apply for and obtain a class T third party alcohol delivery permit pursuant to this particular regulation (§807) and they shall adhere to the following requirements in addition to the general requirements otherwise enumerated in this chapter:

B. The commissioner of Alcohol and Tobacco shall collect an initial and annual fee for third party alcohol delivery service permits in the amount of $1,500 and same shall expire and be renewable annually from date of first issuance.

C. Third party company or platform may enter into an alcoholic beverage service delivery agreements with retail dealers possessing valid class AR or B retail permits with the Office of Alcohol and Tobacco Control that provide for the use by the retailer of an internet or mobile application or similar technology platform to facilitate the sale of alcoholic beverages for delivery to consumers for personal consumption and the third party alcohol delivery service permittee may deliver the alcoholic beverages so facilitated to the consumer.

D. Only malt beverages, sparkling wine, and still wine, as defined in R.S. 26:2 and 241 may be offered for delivery by third party delivery companies from the licensed premises of a restaurant Class AR permit holder. Alcoholic beverages as defined by R.S. 26:2(1) and 26:241(1)(a) may be offered for delivery by a third party delivery permittee from the licensed premises of package house-class B permit holder. No alcoholic beverages shall be offered for curbside

pickup unless otherwise authorized under the law or a separate rule or guidance. All delivery orders containing alcoholic beverage shall also contain food.

E. No alcohol shall be delivered more than 10 miles from the place of purchased for any parish having a population greater than 100,000 according to the latest federal decennial census. Additionally, no alcohol shall be delivered more than 25 miles from the place of purchase for any parish having a population of less than 100,000 according to the latest federal decennial census.

F. No alcohol shall be purchased or sold by the third party delivery service. The third party delivery service is prohibited from charging a markup price for alcohol sales, however third party delivery service may charge a reasonable delivery fee. All transactions must be completed by the retail dealer.

G. Third party company or platform shall be licensed to do business in the state of Louisiana, use their own employees or agents for which the third party delivery company or the third party platform is required to file an Internal Revenue Service Form W-2 or 1099 for delivery, be able to monitor the routes of their employees during deliveries, and conduct screenings and background checks of all employees that will deliver alcoholic beverages.

H. Third party company or platform shall maintain a general liability insurance policy with a liquor liability endorsement in an amount no less than $1,000,000 per occurrence for the duration of every agreement maintained with a retail dealer and they shall provide proof of coverage to every retail dealer with whom they have an agreement and notice to the retail dealer and the commissioner of the Office of Alcohol and Tobacco Control if the coverage lapses or is cancelled.

I. The retail dealer shall manage and control the sale of alcoholic beverages and shall accept or reject all orders placed for alcoholic beverages through the third party delivery service permittee's internet or mobile application or similar technology, collect and remit all applicable state and local taxes, determine the alcoholic beverages offered for sale through the third party delivery service permittee's internet or mobile application or similar technology, and determine the price at which alcoholic beverages are offered for sale or sold through the third party delivery service permittee's internet or mobile application or similar technology.

1. Any credit or debit card information provided by a consumer to the third party permittee for the purpose of transacting a purchase with a retail permittee shall automatically be directed to the retail permittee to ensure that the retail permittee is:

a. the retail dealer at the time of purchase;

b. is shown on the receipt; and

c. receives the payment from the consumer.

2. The retail dealer may pay a third party delivery company or third party platform a fee for its service.

J. The third party alcohol delivery service permittee may not markup the price of alcoholic beverages and may not sell or resell alcoholic beverages. The third party delivery company or platform may charge retailer dealers a reasonable delivery fee for the orders delivered by the third party and may act as an agent for the retail dealer in the collection of payments from the sale of alcoholic beverages, but the full amount of each order must be handled in a manner that gives the retail dealer control over the ultimate receipt of the payment from the consumer.

1. At the time of delivery, alcoholic beverages shall be priced at the same or equal price as if offered for sale by the retailer directly from its licensed location.

2. Alcoholic beverages' prices advertised higher than those offered directly by retailers and/or receipts of alcohol beverages for sale listing prices higher than that offered directly by retailers through third party companies or platforms shall be deemed an impermissible mark-up.

K. The third party alcohol delivery service permittee may receive orders and accept payment via the internet or through a mobile application or similar technology.

L. At the time of delivery of alcoholic beverages, the third party alcohol delivery service permittee shall obtain the recipient's signature and verify the age of the recipient through the use of an electronic age verification device or combination of devices that shall be approved by the Commissioner of Alcohol and Tobacco Control. Such devices shall be capable of all of the following:

1. Verifying proof of age through technology of a magnetic card reader or an alternative technology capable of verifying proof of age;

2. Reading a valid state-issued driver's license, a valid state-issued identification card, a valid military identification card, or a valid passport;

3. Storing the recipient's name, age, date of birth, the expiration date of the identification, and the date and time that the identification was scanned;

M. A third party alcohol delivery service permittee who delivers alcoholic beverages, but fails to comply with the provisions of section I immediately above §801(L) and any other applicable rules contained in this chapter, shall be vicariously liable for damages incurred as a result of the failure to comply.

N. Third party alcohol delivery service permittees must maintain and provide the commissioner of Alcohol and Tobacco Control with a list of retailers they have entered into agreements with within 60 days of receiving their permit and at each renewal. An up-to-date version of the retailer list shall be made available upon demand by the commissioner and her agents and assigns.

AUTHORITY NOTE: Promulgated in accordance with R.S. 26:307(E).

HISTORICAL NOTE: Promulgated by the Department of Revenue, Office of Alcohol and Tobacco Control, LR 47:83 (January 2021).

Title 55
PUBLIC SAFETY
Part VII. Alcohol and Tobacco Control
Subpart 2. Tobacco

Chapter 31. Tobacco Permits

§3101. Definitions

A. For purposes of this Chapter, the following terms are defined.

Brand Family—all styles of cigarettes sold under the same trade mark and differentiated from one another by means of additional modifiers or descriptors, including but not limited to "menthol," "lights," kings," and "100s," and includes any brand name (alone or in conjunction with any other word), trademark, logo, symbol, motto, selling message, recognizable pattern of colors, or any other indicia of product identification identical or similar to, or identifiable with, a previously known brand of cigarettes.

Dealer—every person who manufactures or purchases cigars, cigarettes, or other tobacco products for distribution or resale in this state. The term also means any person who imports cigars, cigarettes, or other tobacco products from any state or foreign country for distribution, sale, or consumption in this state.

Exporter License—permits wholesale dealers with a valid stamping agent designation to engage in interstate business or to affix the tax stamps of another state.

Knowing Violation—the knowing or intentional act of engaging in conduct without a good faith belief that the conduct was consistent with the title 26 of the *Louisiana Revised Statutes*.

Manufacturer—anyone engaged in the manufacture, production, or foreign importation of tobacco products who sells to wholesalers.

Person—any natural *person*, trustee, company, partnership, corporation, or other legal entity.

Purchase—acquisition in any manner, for any consideration. Includes the transport or receipt of product in connection with a *purchase*.

Retail Dealer—every dealer, other than a wholesale dealer, tobacconist, or manufacturer, who sells or offers for sale cigars, cigarettes, or other tobacco products, irrespective of quantity or number of sales.

Sale; Sell—any transfer, exchange, or barter in any manner or by any means for any consideration. Includes the distribution or shipment of product in connection with a *sale*. References to a *sale* "in" or "into" a state refer to the state of the destination point of the product in the *sale*, without regard to where title was transferred. References to *sale* "from" a state refer to the *sale* of cigarettes that are located in that state to the destination in question without regard to where title was transferred.

Sales Entity Affiliate—an entity that (1) sells cigarettes that it acquires directly from a manufacturer or importer and (2) is affiliated with that manufacturer or importer as established by documentation received directly from that manufacturer or importer to the satisfaction of the attorney general. Entities are affiliated with each other if one, directly or indirectly through one or more intermediaries, controls or is controlled by or is under common control with the other.

Stamping Agent—a dealer that is authorized to affix tax stamps to packages or other containers of cigarettes pursuant to R.S. 47:843 et seq., or any dealer that is required to pay the excise tax or tobacco tax imposed pursuant to R.S. 47:841 et seq., on cigarettes.

State Directory; Directory—the *directory* compiled by the attorney general pursuant to R.S. 13:5073, or, when referencing another *state's directory*, the *directory* compiled pursuant to the similar law in that other state.

Tobacconist—any bona fide tobacco retailer engaged in receiving bulk smoking tobacco for the purpose of blending such tobacco for retail sale at a particular outlet where 50 percent or more of the total purchases for the preceding 12 months were purchases of tobacco products, excluding cigarettes.

Vending Machine—any mechanical, electric, or electronic self-service device that, upon insertion of money, tokens, or any other form of payment, automatically dispenses tobacco products.

Vending Machine Operator—any person who controls the use of one or more vending machines as to the supply of cigarettes or any tobacco products in the machine or the receipts from cigarettes vended through such machines.

Wholesale Dealer—dealers whose principal business is that of a wholesaler, who sells cigars, cigarettes, or other tobacco products to retail dealers for purpose of resale, who is a bona fide wholesaler, and 50 percent of whose total tobacco sales are to retail stores other than their own or their subsidiaries within Louisiana. Wholesale dealer shall include any person in the state who acquires cigarettes solely for the purpose of resale in vending machines, provided such person services 50 or more cigarette vending machines in Louisiana other than his own, and those Louisiana dealers who were affixing cigarette and tobacco stamps as of January 1, 1974.

AUTHORITY NOTE: Promulgated in accordance with R.S. 26:901.

HISTORICAL NOTE: Promulgated by the Department of Revenue, Office of Alcohol and Tobacco Control, LR 24:1320 (July 1998), amended LR 38:145 (January 2012), LR 40:1114 (June 2014).

§3103. Identifying Information for Permits

A. Permits

1. An exporter license shall be issued to a wholesale dealer with a valid stamping agent designation if that dealer engages in interstate business or affixes the tax stamps of another state. Such wholesale dealer/stamping agent shall first apply for the license prior to the purchase or possession of unstamped or non-tax paid cigarettes of another state.

2. A retail dealer permit shall be issued to a dealer other than a wholesale dealer, tobacconist, or vending machine operator for each retail outlet where cigars, cigarettes, or other tobacco products are offered for sale either over the counter or by vending machine.

3. A stamping agent designation shall be issued to a dealer that engages in the business of purchasing unstamped or non-tax paid cigarettes and that meets all the requirements of a wholesale dealer as defined in accordance with the provisions of R.S. 26:906(H) and the provisions of this Chapter.

4. A tobacconist permit shall be issued to a dealer engaged in receiving bulk smoking tobacco for the purpose of blending such tobacco for retail sale at a particular outlet where 50 percent or more of the total purchases for the preceding 12 months were purchases of tobacco products, excluding cigarettes, for each retail outlet where cigars, cigarettes, or other tobacco products are offered for sale either over the counter or by vending machine.

5. A vending machine operator permit shall be issued to a vending machine operator operating one or more vending machines. Licensed wholesale dealers who operate vending machines shall not be required to obtain a vending machine operator permit.

6. A vending machine permit shall be issued to the vending machine operator or wholesale dealer for each vending machine he operates and such permit shall be affixed to the upper front surface of the vending machine.

7. A wholesale dealer permit shall be issued to a wholesale dealer for each wholesale place of business operated by the wholesale dealer.

B. The following identifying information shall be listed on the face of all retail dealer permits, vending machine operator permits, and wholesale dealer permits:

1. the name of the license holder;

2. the name and address of the establishment for which the license is obtained;

3. the license number;

4. the dates of issuance and expiration;

5. the amount paid for the license.

C. The following identifying information shall be listed on the face of all vending machine permits:

1. the name of the license holder;

2. the vending machine operator permit number;

3. the vending machine permit number;

4. the address for the location of the vending machine;

5. the date of expiration.

AUTHORITY NOTE: Promulgated in accordance with R.S. 26:902.

HISTORICAL NOTE: Promulgated by the Department of Revenue, Office of Alcohol and Tobacco Control, LR 24:1320 (July 1998), amended LR 38:145 (January 2012), LR 38:2939 (November 2012), LR 40:1115 (June 2014).

§3105. Additional Information for Licenses: Partnership, Corporation, Limited Liability Company (LLC)

A. In addition to all other information required of an applicant by Title 26, any partnership, corporation, or limited liability company applying for a tobacco license shall provide the written agreement (partnership) or certificate (corporation and LLC) to the Office of Alcohol and Tobacco Control.

B. This requirement is waived for any applicant who also has a liquor license with the Office of Alcohol and Tobacco Control, provided the applicant includes the liquor license number on the application.

AUTHORITY NOTE: Promulgated in accordance with R.S. 26:906(D).

HISTORICAL NOTE: Promulgated by the Department of Revenue, Office of Alcohol and Tobacco Control, LR 24:1320 (July 1998).

§3107. Expiration of Licenses

A. The expiration of retail dealer permits shall be staggered to expire in accordance with the following schedule.

Parish Code	Parish Name	Month Permit Expires
01	Acadia	October
02	Allen	March
03	Ascension	January
04	Assumption	November
05	Alveolus	July
06	Beauregard	March
07	Bienville	September
08	Bossier	September
09	Caddo	September
10	Calcasieu	March
11	Caldwell	December
12	Cameron	March
13	Catahoula	December
14	Claiborne	September
15	Concordia	December
16	DeSoto	September
17	East Baton Rouge	January
18	East Carroll	December
19	East Feliciana	August
20	Evangeline	July
21	Franklin	December

Parish Code	Parish Name	Month Permit Expires
22	Grant	December
23	Iberia	October
24	Iberville	July
25	Jackson	December
26	Jefferson	February
27	Jefferson Davis	March
28	Lafayette	October
29	Lafourche	November
30	LaSalle	December
31	Lincoln	September
32	Livingston	August
33	Madison	December
34	Morehouse	December
35	Natchitoches	December
36	Orleans	May
37	Ouachita	December
38	Plaquemines	April
39	Point Coupee	July
40	Rapides	July
41	Red River	September
42	Richland	December
43	Sabine	September
44	St. Bernard	April
45	St. Charles	April
46	St. Helena	August
47	St. James	April
48	St. John	April
49	St. Landry	July
50	St. Martin	October
51	St. Mary	November
52	St. Tammany	August
53	Tangipahoa	August
54	Tensas	December
55	Terrebonne	November
56	Union	December
57	Vermillion	March
58	Vernon	March
59	Washington	August
60	Webster	September
61	West Baton Rouge	July
62	West Carroll	December
63	West Feliciana	August
64	Winn	December

B. All vending machine operator permits shall expire each year on June 30.

C. All vending machine permits shall expire each year on June 30.

D. All wholesale dealer permits shall expire each year on December 31.

AUTHORITY NOTE: Promulgated in accordance with R.S. 26:904.

HISTORICAL NOTE: Promulgated by the Department of Revenue, Office of Alcohol and Tobacco Control, LR 24:1320 (July 1998), amended LR 38:2940 (November 2012).

§3109. Initial Application and Related Fees

A. Tobacco Permits

1. Except as otherwise provided by law and these regulations, tobacco permits shall be issued for a period of no more than one year.

2. Notwithstanding Paragraph A.1 of this Section, the commissioner may issue tobacco permits which are valid for two years to applicants in good standing with the office of alcohol and tobacco control with the fees for the entire permit period being due upon the submission of the original or renewal application. Obtaining a two year permit shall not be mandatory for qualified applicants. Qualified applicants electing not to obtain a two year certificate shall make application under the provisions of Paragraph A.1 of this Section.

2. For purposes of this Section, *good standing* shall mean any original or renewal applicant for a tobacco permit who has not been issued a warning, pled or been found guilty of any violations of Title 26 of the Louisiana Revised Statutes and/or the regulations promulgated thereunder more than once during the two year period preceding the original or renewal application date.

B. The fee for a retail dealer permit shall be $25 per year or any portion thereof, as established in Title 26 of the Louisiana Revised Statutes.

C. The fee for a vending machine operator permit shall be $75 per year or any portion thereof, as established in Title 26 of the Louisiana Revised Statutes.

D. The fee for a vending machine permit shall be $5 per machine per year or any portion thereof, as established in Title 26 of the Louisiana Revised Statutes.

E. The fee for a wholesale dealer permit shall be $75 per year or any portion thereof, as established in Title 26 of the Louisiana Revised Statutes

F. Pursuant to Title 26 of the Louisiana Revised Statutes, the fee for a tobacconist permit shall be $100 per year or any portion thereof based on the effective rate as of August 15, 2010.

AUTHORITY NOTE: Promulgated in accordance with R.S. 26:903.

HISTORICAL NOTE: Promulgated by the Department of Revenue, Office of Alcohol and Tobacco Control, LR 24:1321 (July 1998), amended LR 38:145, 146 (January 2012), LR 38:2940 (November 2012).

§3111. Renewal Deadline: Penalties

A. For a renewal application to be timely filed, the application and the appropriate fee must be received by the Office of Alcohol and Tobacco Control on or before the license expiration date.

B. Failure to timely file the renewal application will subject the license holder to the delinquency penalties authorized by R.S. 26:905.

AUTHORITY NOTE: Promulgated in accordance with R.S. 26:905.

HISTORICAL NOTE: Promulgated by the Department of Revenue, Office of Alcohol and Tobacco Control, LR 24:1322 (July 1998).

§3113. Special Event Permits and Related Fees

A. The Office of Alcohol and Tobacco Control may issue a special event permit for a duration of three consecutive days, with no more than 12 such permits issued to any one person within a single calendar year.

B. The fee for a special event permit shall be $25.

AUTHORITY NOTE: Promulgated in accordance with R.S. 26:923.

HISTORICAL NOTE: Promulgated by the Department of Revenue, Office of Alcohol and Tobacco Control, LR 24:1322 (July 1998).

§3115. Age Verification Requirements

A. Before a seller mails, ships, or otherwise delivers cigarettes cigars, pipe tobacco, chewing tobacco, smokeless tobacco, or any other tobacco product of any kind in connection with a sale, the seller must verify the consumer's age through electronic or written communication.

B. Persons accepting purchase orders for delivery sales may request that prospective consumers provide their e-mail addresses.

C. No retailer may sell or deliver cigarettes, cigars, pipe tobacco, chewing tobacco, smokeless tobacco, or any other tobacco product of any kind in a retail establishment to any person through any unattended or self-service checkout counter or mechanical device unless the customer submits to a clerk a valid driver's license, selective service card, or other lawful identification that on its face establishes the age of the person as 18 years or older and there is no reason to doubt the authenticity and correctness of the identification prior to approaching the self-checkout counter.

AUTHORITY NOTE: Promulgated in accordance with R.S. 47:833.

HISTORICAL NOTE: Promulgated by the Department of Revenue, Office Alcohol and Tobacco Control, LR 31:2035 (August 2005).

§3117. Importation of Cigarettes by Wholesaler Only

A. Cigarettes, as defined in R.S. 26:901, produced or manufactured outside of this state cannot be sold or offered for sale in Louisiana, or shipped or transported into the state except to the holder of a wholesaler's permit. Delivery of cigarettes produced or manufactured outside of this state must be made at the place of business of the wholesaler shown on the wholesaler's permit, and must be received and warehoused by the wholesaler at that place of business, where such cigarettes must come to rest before delivery is made to any retailer.

B. Pursuant to the provisions of R.S. 26:902 et seq., a wholesale dealer shall not accept delivery of any unstamped cigarettes produced or manufactured outside the state unless such wholesale dealer is also the holder of a valid stamping agent designation and exporter license. Acting within his duties as stamping agent, a wholesale dealer who comes into receipt of such and unstamped package of cigarettes, shall immediately cause the proper affixation of the required stamps to each package of cigarettes.

C. In accordance with R.S. 47:871, no person who is engaged in the business of selling or distributing cigarettes may ship or transport, or cause to be shipped or transported, cigarettes to any consumer in the state. The provisions of this Section shall apply regardless of whether the person engaged in the business of selling or distributing cigarettes is located within or without the state.

D. Any retailer of cigarettes who violates any provision of this Section will be subject to a civil penalty in the amount of $25,000. Any retailer that sells and ships directly to consumers in Louisiana pursuant to Subsection B of this Section must, on the application for authority to make such shipments filed with the secretary of the Department of Revenue in accordance with Subsection C of this Section, acknowledge in writing the civil penalty established in this Subsection and must consent to the imposition thereof upon violation of this Section. The secretary may initiate and maintain a civil action in a court of competent jurisdiction to enjoin any violation of this Section and to recover the civil penalty established in this Subsection, together with all costs and attorney fees incurred by the secretary incidental to any such action.

AUTHORITY NOTE: Promulgated in accordance with R.S. 26:922.

HISTORICAL NOTE: Promulgated by the Department of Revenue, Office of Alcohol and Tobacco Control, LR 31:2036 (August 2005), amended LR 40:1115 (June 2014).

§3119. Participation in Hearing by Video Conference

A. To the extent practicable and if the parties do not object, the commissioner may authorize the use of teleconference, video link, or other visual remote communications technology to conduct all or any portion of any hearing authorized by the provisions of Title 26 of the Louisiana Revised Statutes and the regulations promulgated thereunder; unless prohibited by law.

B. Prior to authorizing the use of teleconference, video link, or other visual remote communications technology for the conducting of any hearing, the commissioner shall provide the permittee with written notice of his intent to do so. The notice shall be sent by certified mail to the permittee at the address of his place of business as given in his application for the permit and shall be sent not less than 10 nor more than 30 calendar days from the scheduled hearing date. When so addressed and mailed, the notice shall be conclusively presumed to have been received by the permittee.

C. Any party objecting to the commissioner’s authorization of the use of teleconference, video link, or other visual remote communications technology to conduct all or any portion of any authorized hearing shall provide the commissioner with written notification of the objection at least five days prior to the scheduled hearing date. Upon receipt of any objection, the commissioner shall not allow the use of teleconference, video link, or other visual remote communications technology to conduct any portion of the hearing for which a proper objection was raised. Failure of a permittee to object in writing within at least five calendar days prior to the scheduled hearing date shall conclusively constitute a waiver of any objections.

D. Any use of teleconference, video link, or other visual remote communications technology for the conducting of any hearing shall be done in real-time.

AUTHORITY NOTE: Promulgated in accordance with R.S. 99.1, 296.1, and 919.1 and Act 88 of the 2011 Regular Session of the Louisiana Legislature.

HISTORICAL NOTE: Promulgated by the Louisiana Department of Revenue, Office of Alcohol and Tobacco Control, LR 38:1285 (May 2012).

Title 55
PUBLIC SAFETY
Part IX. Liquefied Petroleum Gas

Chapter 1. General Requirements

Editor's Note: This Chapter applies to all classes of permits.

Subchapter A. New Dealers

§101. Prerequisite

A. As a prerequisite to engage in the liquefied petroleum gas business in the state of Louisiana, an applicant shall first comply with the applicable rules and regulations of the commission.

AUTHORITY NOTE: Promulgated in accordance with R.S. 40:1846.

HISTORICAL NOTE: Adopted by the Department of Public Safety, Liquefied Petroleum Gas Commission, November 1972, amended December 1974, LR 38:1254 (May 2012).

§103. Definitions

A. The following terms, as used in this Part, have the meanings listed below.

Appliance—any device that utilizes gas as a fuel or raw material to produce light, heat, power, refrigeration, or air conditioning.

Applicant—a person, firm, or corporation who has applied for a permit or registration with the Liquefied Petroleum Gas Commission.

Approved—approved by or acceptable to the authority having jurisdiction. This normally means that equipment or materials that are listed or labeled have been specifically approved by the authority having jurisdiction.

ASME—American Society of Mechanical Engineers.

Authority Having Jurisdiction (AHJ)—the organization, office, or individual responsible for approving equipment, an installation, or a procedure. In Louisiana the AHJ is the Liquefied Petroleum Gas Commission, the Office of the Director of the Liquefied Petroleum Gas Commission.

Cargo Tank—a container used to transport liquefied petroleum gas over a highway as liquid cargo, either mounted on a conventional truck chassis or as an integral part of a transporting vehicle in which the container constitutes in whole, or in part, the stress member used as a frame.

CETP—Certified Employee Training Program.

Commission—Louisiana Liquefied Petroleum Gas Commission.

Container—any vessel, including cylinders, tanks, portable tanks, and cargo tanks used for the transporting or storing of liquefied petroleum gas.

Dealer or *Permit Holder*—any person, firm, or corporation who holds a permit or registration to enter into any phase of the liquefied petroleum gas business in the state of Louisiana.

Disaster—the result of a natural or man-made event which causes loss of life, injury, and property damage, including but not limited to natural disasters such as a hurricane, tornado, storm, flood, high winds, and other weather related events, forest and marsh fires, and man-made disasters, including but not limited to nuclear power plant incidents, hazardous materials incidents, oil spills, explosion, civil disturbances, public calamity, acts of terrorism, hostile military action, and other events related hereto.

DOT—the United States Department of Transportation.

Emergency—the actual or threatened condition which has been or may be created by a disaster or; any natural or man-made event which results in an interruption in the delivery of utility services to any consumer of such services and which affects the safety, health, or welfare of a Louisiana resident; or

a. any instance in which a utility's property is damaged and such damage creates a dangerous condition to the public;

b. any national or state emergency, including acts of terrorism or a congressional authorization or presidential declaration pursuant to the War Powers Resolution (50 U.S.C. 1541 et seq.).

End User—any person, firm, or corporation which has the use of or legal authority or control over any system which utilizes liquefied petroleum gas.

Installation—when used in the context of an existing thing, the same as system or liquefied petroleum gas system (see definition of *system* or *liquefied petroleum gas system*).

Installation—when used in the context of an action, the art of installing or setting up for use or service.

Labeled—equipment or materials to which has been attached a label, symbol, or other identifying mark of an organization that is acceptable to the authority having jurisdiction and concerned with product evaluation that maintains periodic inspection of production of labeled equipment or materials and by whose labeling manufacturer indicates compliance with appropriate standards or performance in a specified manner.

Leak Check—operation performed on a complete gas piping system and connected equipment prior to placing it into operation following initial installation and pressure

testing or interruption of gas supply or out-of-gas situation or first time service of a new customer to verify that the system does not leak.

Liquefied Petroleum Gases—those gases derived from petroleum or natural gas, and are herein defined as those in the gaseous state at normal atmospheric temperature and pressure, and those maintained in liquid state at normal atmospheric temperature by means of suitable pressure. Those gases having a vapor pressure not exceeding that allowed for commercial propane composed predominantly of the following hydrocarbons, either by themselves or as mixtures: propane, propylene, butane (normal butane or iso butane), and butylenes. This definition shall not include acetylene as a regulated gas.

Listed—equipment or materials included in a list published by an organization acceptable to the authority having jurisdiction and concerned with product evaluation that maintains periodic inspection of production of listed equipment or materials and whose listing states either that the equipment or material meets appropriate standards or has been listed and found suitable for use in a specified manner.

Materially Affect Safety—any action or inaction that significantly and adversely affects the public health, safety or welfare, whether caused by deliberate act or negligence.

Mobile Air Conditioning System—mechanized vapor compression equipment which is used to cool the driver's or passenger's compartment of any motor vehicle.

New Dealer—any person, firm, or corporation that does not hold a permit or registration to engage in the liquefied petroleum gas business as of the date of their application.

Office of the Director—the office of the Executive Director of the Louisiana Liquefied Petroleum Gas Commission.

Places of Public Assembly—places where the egress is open to the public. This definition includes, but is not limited to, bars, restaurants, service stations, grocery stores, schools, churches, hospitals, sales offices, nursing homes, and other similar places. This definition is not intended to include places that limit public access.

Pressure Test—an operation performed to verify the gas tight integrity of gas piping following its installation or modification.

Qualified Agency—any person, firm, or corporation which is engaged in and is responsible for the installation or replacement of liquefied petroleum gas piping, tanks, containers, the connection, installation, repair, or servicing of equipment or appliances and is experienced in such work and familiar with all precautions required and has complied with all the requirements of the authority having jurisdiction.

Reseller or *Wholesaler*—

a. a person, firm, or corporation who:

i. holds title or ownership of liquefied petroleum gas as it leaves the facility or plant of a manufacturer of liquefied petroleum gas, or the facility or plant of a manufacturer of products of which liquefied petroleum gas form a component part, or of a commercial storage facility;

ii. transfers such title or ownership to another without substantially changing the form of the liquefied petroleum gas;

iii. transfers such title or ownership to another reseller, or to a liquefied petroleum gas dealer for sale at retail;

b. this definition shall include a manufacturer of liquefied petroleum gas or a manufacturer of products of which liquefied petroleum gas forms a component part, if title or ownership transfers directly from the manufacturer to a liquefied petroleum gas dealer for sale at retail;

c. this definition shall not include a manufacturer of liquefied petroleum gas or a manufacturer of products of which liquefied petroleum gas forms a component part, if title or ownership transfers to another manufacturer of liquefied petroleum gas, to another manufacturer of products of which liquefied petroleum gas forms a component part or to a reseller.

Retail Dealer—any person, firm, or corporation who normally sells liquefied petroleum gas to an end user for consumption.

Retail Station—that portion of property where liquefied petroleum gases used as motor fuel are stored and dispensed from fixed equipment into liquefied petroleum gas fuel tanks of motor vehicles and where such dispensing is an act of retail motor fuel sale.

State of Emergency or Disaster—any event declared by the governor of the state by his authority under the Louisiana Homeland Security and Emergency Assistance and Disaster Act, under R.S. 29:721 et seq.

System or Liquefied Petroleum Gas System—any tank, container, heat or cold producing device, appliance or piping that utilizes or has liquefied petroleum gas connected thereto. This includes, but is not limited to, ranges, hot water heaters, heaters, air conditioners, containers, tanks, furnaces, space heaters or piping used in the transfer of liquefied petroleum gas either in the vapor or the liquid state from one point to another, internal combustion engines, both stationary and mobile, grain dryers or any combination thereof.

Tank(s)—same as a container(s).

Used Manufactured Home—a manufactured home which is not being sold or offered for sale as new, which has been previously sold as new and is used for residential purposes.

AUTHORITY NOTE: Promulgated in accordance with R.S. 40:1846.

HISTORICAL NOTE: Adopted by the Department of Public Safety, Liquefied Petroleum Gas Commission, November 1972, amended December 1974, amended by the Department of Public Safety and Corrections, Liquefied Petroleum Gas Commission, LR 24:459 (March 1998), LR 29:2508 (November 2003), LR 31:2556 (October 2005), LR 33:1139 (June 2007), effective July 1, 2007,

LR 36:2571 (November 2010), LR 38:1255 (May 2012), LR 47:481 (April 2021).

§105. Applications

A. Any person, firm, or corporation desiring to enter the liquefied petroleum gas business in the state of Louisiana shall file formal application for a permit or registration with the commission. In the case of Class VI and Class VIII permits, a formal application for a permit shall be filed for each location. All other classes of permits and registrations require only one formal application for the permit or registration. These applications for permits or registrations shall be administratively granted by the office of the director, upon complying with all commission requirements, such as payment of the applicable fees, qualification of personnel, providing proof of insurance and if applicable, final approval of a sketch, registration and safety inspection of tanker trucks. The commission shall ratify the permits or registrations at the first subsequent commission meeting after at least 20 days have elapsed after the permit has been administratively granted by the office of the director. Presence of applicant for the permit or his authorized representative is required at the commission meeting when the application for a permit is ratified for Class I, IV and VI. The applicant's supplier is prohibited from being the authorized representative. Only with special approval of the commission, under extenuating circumstances, will the commission allow the applicant for a permit to be represented by another party other than a principal officer, director, manager, or attorney. The formal application form(s) will be furnished by the commission upon request.

B. No person, firm or corporation engaged in selling of liquefied petroleum gas only in small consumer quantities in U.S. Department of Transportation specification 2Q containers shall be required to obtain a permit as required by R.S. 40:1847. These quantities shall not exceed 1 liter per container.

AUTHORITY NOTE: Promulgated in accordance with R.S. 40:1846.

HISTORICAL NOTE: Adopted by the Department of Public Safety, Liquefied Petroleum Gas Commission, November 1972, amended December 1974, amended by the Department of Public Safety and Corrections, Liquefied Petroleum Gas Commission, LR 11:557 (May 1985), LR 24:460 (March 1998), LR 25:1262 (July 1999), LR 29:2509 (November 2003), LR 31:2567 (October 2005), LR 33:1139 (June 2007), effective July 1, 2007, LR 38:1256 (May 2012), LR 46:188 (February 2020).

§107. Requirements

A. Before any permit or registration may be issued from the office of the director, all applicants shall have complied with or agree to comply with the applicable requirements as follows.

1. Shall deposit filing fee of $100 for Class I, I-E, IV and VI; $50 for class VI-X and $25 for all remaining permits. This fee shall accompany the application.

2. Formal application for a permit or registration shall be submitted to the office of the director.

3. Shall have proof of insurance on file in the office of the director on a commission proprietary certificate of insurance or one substantially equivalent issued by a Louisiana licensed agent in the minimum sum of $1,000,000, in the classes of insurance as required by the commission. This certificate of insurance shall indicate the type and amount of coverage. This policy of insurance shall meet the proof of insurance as required by the commission. Said certificate shall be considered evidence of liability insurance coverage; said certificate shall state that in the event the insurance company cancels the insurance policy, the insurance company shall notify the office of the director 10 days prior to the date of cancellation. A binder of insurance coverage shall be acceptable as proof of insurance until the policy is issued and a certificate of insurance is issued. The $1,000,000 requirement shall be effective on the first proof of insurance required after November 1, 2003. The commission shall provide the proprietary certificate of insurance form on its public web site for downloading or shall provide copies of the proprietary certificate of insurance form via facsimile or via U.S. mail upon request. In lieu of the certificate of insurance for automobile liability, the commission may accept a certificate of self-insurance issued by the office of motor vehicles.

a. In lieu of such liability insurance coverage, the applicant may post with the commission bonds or other securities issued by the United States of America or the state of Louisiana, or certificates of deposit or similar instruments issued by a lending institution regulated by an agency of this state or by the federal government, in the minimum sum of $1,000,000, which bonds or securities shall be held in trust by the commission for the benefit of any person, firm or corporation to which such legal liability may accrue;

b. Nothing in this Paragraph shall be construed as reducing the insurance requirements imposed by the laws or rules and regulations of the federal government or the state of Louisiana upon persons, firms or corporations engaged in the liquefied petroleum gas business.

4.a. Where applicable, storage tank and location shall be approved by the commission's authority having jurisdiction.

b. All sketches or drawings of proposed bottle filling plants and/or liquid withdrawal systems shall be submitted to the office of the director and approved before system is put into operation.

5.a. Where applicable, applicant shall provide adequate transport and/or delivery trucks satisfactory to the commission. Each transport and/or delivery truck shall be registered in accordance with commission rules and regulations, LAC 55:IX.166.

b. All sketches of proposed installations, as required in other Sections of these regulations, shall be submitted to the office of the director, showing all details of the proposed installation governed by these regulations. Sketches or drawings shall be submitted to the office of the director and approved before installation may begin. The commission

reserves the right to make a final inspection and witness a pressure test by an inspector of the commission.

c. Each location of Class I, Class I-E, Class VI and Class VIII dealers, which fill DOT specification cylinders of 200 lbs. or less, liquefied petroleum gas capacity, that are in commerce or transportation, shall provide a suitable weighing device (scales).

6. Applicants shall have paid a permit fee in the amount of $150, Class I-E and Class III which shall be $500 and R-1, R-2 registrations, which shall be $37.50 and Class VI-X shall be in the amount of $150 for each location. For fiscal year 2014-2015, and for each subsequent fiscal year, the permit fee shall be 0.1369 of 1 percent of annual gross sales of liquefied petroleum gas with a minimum of $150 for each location. For classes not selling liquefied petroleum gases in succeeding years the permit fee shall be $150, except registrations shall be $37.50 per year.

a. Each class I and class IV dealer shall prepare and submit reports to the commission of each three month period within their annual permit fee calculation period, by the end of the month following each three-month period, in a form acceptable to the commission, the previous three month's purchases and sales. An additional five calendar days shall be granted for mail delays before a violation is issued.

b. The reports of class IV dealers shall contain the purchases and sales indicated by total dollars and by company name. The reports of Class I dealers shall contain the purchases by total dollars and by company name and sales by total dollars only.

c. Any information so furnished shall be considered and held confidential and privileged by the commission, its director and/or his employees.

7. Persons in charge of operations shall furnish proof satisfactory to the commission and the office of the director, that they have had experience in and are familiar with and will abide by all safety precautions necessary in the conducting of the business for which they are granted a permit.

8. All service and installation personnel, fuel transfer personnel, carburetion mechanics and tank truck drivers shall have a card of competency from the office of the director. All permit holders, except class III and VI-X permit holders, shall have at least one card of competency issued to their permit. The commission may waive the one card of competency until the dealer commences operations in the state. A card of competency shall be issued to an applicant upon receipt of a $20 examination fee and successfully passing the competency test, providing the applicant holds some form of identification acceptable to the commission. The commission may accept as its own a reciprocal state's examination which contains substantially equivalent requirements. This shall be evidenced by a letter from the issuing authority or a copy of a valid card issued by the reciprocal state. All applicable fees shall be paid prior to issuing the card.

a. All cards of competency shall be renewed annually by the permit holder. There is a charge of $10 per card. After expiration, there is a penalty of $3 per card. There is a charge of $10 for replacing a lost card, a change of employer name or change of company name. A card with an improper employer or company name shall not be valid.

b. All employees who are qualified by this commission and have been issued certificates of competency, shall have their certificates of competency on their person while on duty. Should an employee lose his card, dealer shall notify this office within 10 days for the issuance of a new card. If an employee terminates his employment with the dealer for whom the card is issued, the card shall be picked up by the dealer and returned to this office immediately.

c. The following shall be mandatory training requirements in order to maintain a certificate of competency in Louisiana.

i. New Hires

(a). Certified Employee Training Program (CETP) or commission approved alternatives shall be the basis of all new hire training, which is not grandfathered.

(b). In addition to the standard commission competency test which is required prior to beginning work unsupervised, all certificates of competency holders of Class 1 permit holders with certificates of competency with the following names: delivery truck driver, manager exam, installation and service, and delivery truck driver/limited service shall pass the CETP Basic Test or commission approved alternative training program within one year of their hire date. Up to two years provisional certificates of competency may be issued by the commission. Other commission certificates of competency, namely serviceman recreational vehicles, transport truck driver, motor fuel and carburetion installation, welding and metal working industry, cylinder delivery truck driver, cylinder re-qualification, and all combined certificates containing the immediate before named certificates of competency are exempt from this provision.

(c). Training may be given by the individual companies or may be given by an outside firm and individual companies may use any method they choose to train their employees on the CETP Basic Program, if used. This may include, but is not limited to, e-learning, CDs, manuals, classroom instruction or any combination thereof.

(d). The CETP Basic Test, if used, shall be proctored by a licensed proctor.

(e). Proof of a passing grade, for purposes of certification, shall be maintained in dealer employee file. The employer shall maintain this record until one year after the employment has terminated.

(f). Individuals who have held a certificate of competency with the commission for five consecutive years or longer are exempt from the CETP Basic test new hire

provision; however, they shall meet the continuing education training provisions.

ii. Continuing Education

(a). Class I employees with a commission certificate of competency shall have six hours of approved continuing education every year in order to maintain their certificates of competency.

(b). This training shall include training that is most tailored for the particular functions the employee does on a normal and routine basis. This may include CETP modular training classes, defensive driving classes, equipment certification classes, pipe sizing classes, leak check classes and other similar training pre-approved and assigned credit time by the commission.

(c). All training approved by the commission shall be in objective format such as written, video with audio, or audio only. Each training class will be assigned credit time value for meeting time requirements of this Section.

(d). This training may be done in-house by the dealer, by outside sources, or by commission inspectors.

(e). Proof of a passing grade, for purposes of certification, shall be maintained in dealer employee file. The employer shall maintain this record until one year after the employment has terminated.

9. Shall have necessary experience in liquefied petroleum gas business or have employed a recognized operator of such experience and competency. The commission reserves the right to demand that such knowledge and competency be proved by a written examination.

10. Where applicable, shall provide adequate switch track or tank loading and unloading facilities. All auxiliary equipment such as pumps, hose, electrical switches, etc., shall be Underwriters Laboratory approved for liquefied petroleum gases. If equipment is not approved, drawings and descriptions shall be submitted to the office of the director for his approval before installation.

11. Applicants for change of name shall deposit a filing fee of $25 with a formal application for a name change. The office of the director shall administratively grant the name change after all commission requirements are met. The commission shall ratify the name change at the next commission meeting after which a minimum of 20 days have elapsed since the administrative granting of the name change. A representative of the new firm or corporation shall be required to be present when the application is ratified by the commission, except in the cases of Class VI-X, and R-1 and R-2 registrations, when appearance is waived. All certificates of competency shall be changed to new name, except Class VI-X which does not require certificates of competency.

12. Any permit holder who does not actively engage in business for which permit was granted, for a period of six consecutive calendar months, may have his permit revoked by the commission.

13. The commission shall grant Class I and Class I-E Liquefied Petroleum Gas permits to nonresident applicants only after the commission has reached a reciprocal agreement with the Liquefied Petroleum Gas regulating authority of the state in which the applicant resides.

14. All Class I, Class VI, Class VI-X, and Class VIII permit holders shall accept, for proper disposal or requalification, all 4 lb. through 40 lb. liquefied petroleum gas cylinders from consumers, when offered, which are not suitable for continued service in their present condition. Class I permit holders who supply liquefied petroleum gas to Class VI, Class VI-X and Class VIII permit holders shall accept and properly dispose of or requalify all 4 lb. through 40 lb. liquefied petroleum gas capacity cylinders when offered by their Class VI, Class VI-X, or Class VIII permit holders for disposal or requalification. Those cylinders offered for disposal or requalification become the property of the permit holders accepting the cylinder. It is the responsibility of the Class I permit holders to properly dispose of the cylinders which are not or cannot be requalified.

15. All classes of permit or registration holders shall display a copy of their permit in a prominent area at all locations utilizing said permit.

AUTHORITY NOTE: Promulgated in accordance with R.S. 40:1846.

HISTORICAL NOTE: Adopted by the Department of Public Safety, Liquefied Petroleum Gas Commission, November 1972, amended December 1974, LR 1:315 (July 1975), LR 4:86 (March 1978), LR 7:633 (December 1981), amended by the Department of Public Safety and Corrections, Liquefied Petroleum Gas Commission, LR 11:557 (May 1985), LR 15:854 (October 1989), LR 16:1063 (December 1990), LR 20:1400 (December 1994), LR 24:461 (March 1998), LR 24:2311 (December 1998), LR 25:1262 (July 1999), LR 25:2410 (December 1999), LR 26:1487 (July 2000), LR 27:2256 (December 2001), LR 28:2553 (December 2002), LR 29:2509 (November 2003), LR 31:2567 (October 2005), LR 33:1140 (June 2007), effective July 1, 2007, LR 35:2201 (October 2009), LR 35:2465 (November 2009), LR 38:1256 (May 2012), LR 41:395 (February 2015), LR 42:427 (March 2016), LR 42:1671 (October 2016), LR 43:967 (May 2017), LR 46:188 (February 2020), LR 47:481 (April 2021).

§109. Compliance with Rules

A. Compliance with all other applicable statutes, rules and regulations is a mandatory requirement for all permit holders.

B. The commission may assess a civil penalty of not less than $100 nor more than $1000 for each violation of the rules and regulations adopted by the commission. Civil penalties may be assessed only by a ruling of the commission based on an adjudicatory hearing held in accordance with the Administrative Procedure Act. The commission may institute civil proceedings to enforce its ruling in the district court for the parish in which the commission is domiciled or the district court for the parish in which the violation occurred.

C. In lieu of the adjudicatory hearing required in §109.B, the commission may accept an affidavit signed by the party being cited for a violation, prior to the hearing date set for the charge, waiving their right of appearance, with a plea of guilty to a charge, and with the payment of a proposed penalty as set forth in the notice issued by the commission. Regarding violations involving fees, the fee and any interest and penalty on those fees shall be paid in addition to the proposed civil penalty for the violation. This option shall not be available after the hearing date.

D. The commission reserves the right to conduct a full adjudicatory hearing regarding any violation of its rules and regulations.

AUTHORITY NOTE: Promulgated in accordance with R.S. 40:1846.

HISTORICAL NOTE: Adopted by the Department of Public Safety, Liquefied Petroleum Gas Commission, November 1972, amended December 1974, amended by the Department of Public Safety and Corrections, Liquefied Petroleum Gas Commission, LR 11:557 (May 1985), LR 25:2411 (December 1999), LR 31:2567 (October 2005), LR 38:1259 (May 2012), LR 46:188 (February 2020), LR 47:482 (April 2021).

§111. Re-Application

A. Any person, firm or corporation who has made application for a permit to enter the liquefied petroleum gas business and whose request for permit has been denied, may resubmit a permit application 90 days after the date of denial, with the exception of a Class I-E permit application. Any person, firm or corporation who has made application for a Class I-E permit to enter the liquefied petroleum gas business and whose request for permit has been denied, may resubmit a permit application any time during the same disaster and/or emergency that the initial permit application was submitted to the commission.

AUTHORITY NOTE: Promulgated in accordance with R.S. 40:1846.

HISTORICAL NOTE: Adopted by the Department of Public Safety, Liquefied Petroleum Gas Commission, November 1972, amended December 1974, LR 7:633 (December 1981), LR 38 1259 (May 2012), LR 47:482 (April 2021).

§113. Classes of Permits and Registrations

A. The commission shall issue upon application the following classes of permits and registrations upon meeting all applicable requirements of §107 and the following:

1. Class I. Holders of these permits may enter any phase of the liquefied petroleum gas business.

a. Shall furnish evidence of general liability insurance in the minimum sum of $1,000,000 coverage per:

i. products;

ii. manufacturers and contractors; and

iii. automobile liability.

b. Holders of these permits shall provide a storage capacity for liquefied petroleum gas of not less than15,000 gallons in one location, under fence, located within the dealer trade area within the state of Louisiana, and shall show evidence of ownership of storage tank or a bona fide lease of five years minimum. This requirement shall not be retroactive.

c. Where fuel is used direct from cargo tank, an approved valve with proper excess flow device shall be used. Connector to vehicle's engine shall be approved for such use and protected from mechanical injury.

d. No truck shall be parked on a street or highway at night in any city, town, or village, except for the purpose of serving a customer.

e. Compliance with all other applicable rules and regulations is a mandatory requirement.

f. The name of the dealer shall appear on all tank trucks, storage tank sites, and/or advertising being used by the dealer. At consumer premises, where the tank or the container is owned by the dealer, the dealer’s name shall be affixed. This requirement is considered met if documentation is provided, upon demand, that the dealer’s name was affixed at the time of installation. Consumer premises requirement is not retroactive.

2. Class I-E. Holders of these permits may enter any phase of the liquefied petroleum gas business. These permits shall only be granted during an emergency and/or disaster. These permits are valid for 90 days from the date of issuance. Permits may be renewed prior to the expiration date of the permit during the course of the emergency and/or disaster that it was initially applied for.

a. Holders of these permits shall furnish evidence of general liability insurance in the minimum sum of $1,000,000 coverage per:

i. products;

ii. manufacturers and contractors; and

iii. automobile liability.

b. Where fuel is used direct from cargo tank, an approved valve with proper excess flow device shall be used. Connector to vehicle's engine shall be approved for such use and protected from mechanical injury.

c. No truck shall be parked on a street or highway at night in any city, town, or village, except for the purpose of serving a customer.

d. Compliance with all other applicable statutes, rules and regulations is a mandatory requirement.

e. The name of the dealer shall appear on all tank trucks, storage tank sites, and/or advertising being used by the dealer. At consumer premises, where the tank or the container is owned by the dealer, the dealer’s name shall be affixed. This requirement is considered met if documentation is provided, upon demand, that the dealer’s name was affixed at the time of installation. Consumer premises requirement is not retroactive.

3. Class II. Holders of these permits may install and service liquefied petroleum gas containers, piping, and appliances but shall not sell nor deliver gas with this permit.

This class is also applicable to the installation and service of liquefied petroleum gas containers, piping, and appliances on mobile homes, modular homes, manufactured homes, motor homes, travel trailers homes or any other recreational vehicles.

a. Holders of these permits shall furnish evidence of general liability insurance in the minimum sum of $1,000,000 coverage per:

i. products;

ii. manufacturers and contractors; and

iii. motor vehicle liability.

b. Louisiana manufacturers and dealers of mobile homes, manufactured homes, modular homes, motor homes, travel trailers, or any recreational vehicles shall comply with all state and federal safety standards and perform all safety tests on mobile homes, modular homes, manufacture homes, motor homes, travel trailers, or any recreational vehicles using liquefied petroleum gas.

c. Upon delivery of a mobile home, manufactured homes, modular homes, motor home, travel trailer, or any other recreational vehicle, new or used, the required installation report and inspection and testing of any liquefied petroleum gas system and appliances shall be performed by the dealer or any entity performing functions as a dealer using liquefied petroleum gas in the system. An installation report properly completed and signed by the customer or his/her authorized representative shall be sent to the office of the director verifying that the tests were performed and that the test was eye witnessed by the customer or his/her authorized representative.

d. The mobile home, manufactured homes, modular homes or recreational vehicle dealer or entity performing functions as a dealer shall have a permit with this commission and is responsible to this commission to make the required installation report, perform the required inspection and safety tests, or make arrangements for it to be made by a qualified permit holder.

e. Compliance with all other applicable statutes, rules and regulations is a mandatory requirement.

4. Class III. Brokers/Special Vendors. Holders of these permits may purchase liquefied petroleum gas only from dealers who hold a valid liquefied petroleum gas permit and resell the aforementioned purchased liquefied petroleum gas product to end users utilizing floor maintenance machines and/or industrial trucks (forklifts) on their premises. Holders of these permits shall not deliver gas or engage in repairing liquefied petroleum gas containers or systems.

a. Holders of these permits shall furnish evidence of general liability insurance in the minimum sum of $1,000,000 per products liability coverage.

b. Shall submit a completed “location approval form” for each physical location being served, with a handling fee of $150 for each location being served.

c. Compliance with all other statutes, rules and regulations is a mandatory requirement.

d. Shall provide 24-hour emergency contact information at each liquefied petroleum gas storage location. The person deemed the emergency contact shall have basic knowledge regarding liquefied petroleum gas emergencies and shall maintain contact information per the servicing liquefied petroleum gas supplier.

e. The Class III permit holder shall post the servicing liquefied petroleum gas supplier’s name (name on Louisiana liquefied petroleum gas permit) at each liquefied petroleum gas storage site and each end user’s location.

5. Class IV. Resellers (Wholesalers). Holders of these permits may deliver and transport liquefied petroleum gas over the highways of the state; may sell liquefied petroleum gases only to manufacturers of liquefied petroleum gases, or manufacturers of products which liquefied petroleum gases form a component part, or to dealers who hold a permit with this commission; utilize aboveground steel storage and/or approved salt dome, shale and other underground caverns for the storage of liquefied petroleum gases; do general maintenance work on their equipment, using qualified personnel, but shall not sell or install systems and appliances.

a. Shall furnish evidence of general liability insurance in the minimum sum of $1,000,000 coverage per:

i. products;

ii. manufacturers and contractors; and

iii. automobile liability.

b. The name of the dealer shall appear on all tank trucks which require registration with the commission and storage tank sites.

c. Compliance with all other applicable statutes, rules and regulations is a mandatory requirement.

6. Class V. Carburetion Permit. Holders of these permits may install equipment, including containers, and service liquefied petroleum gas equipment used on internal combustion engines. They shall not deliver liquefied petroleum gas.

a. Holders of these permits shall furnish evidence of general liability insurance in the minimum sum of $1,000,000 per manufacturers and contractors liability coverage.

b. Compliance with all other applicable statutes, rules and regulations is a mandatory requirement.

7. Class VI. Holders of these permits may engage in the filling of approved cylinders and motor fuel tanks with liquefied petroleum gas on their premises, but shall not deliver gas.

a. Holders of these permits shall furnish evidence of general liability insurance in the minimum sum of $1,000,000 per products liability coverage.

b. The name of the dealer shall appear on storage tank sites.

c. Compliance with all other applicable statutes, rules and regulations is a mandatory requirement.

8. Class VI-X. Holders of these permits may engage in the exchange of approved liquefied petroleum gas cylinders on their premises, but shall not fill cylinders. They shall not deliver gas.

a. Holders of these permits shall furnish evidence of general liability insurance in the minimum sum of $1,000,000 per products liability coverage.

b. Any current Class VI permit holder may convert to a Class VI-X permit by filing formal application with the commission and submitting a $25 filing fee. Presence of the applicant at the commission meeting will be waived. Upon receipt of the application and filing fee, permit shall be issued.

c. Compliance with all other applicable statutes, rules and regulations is a mandatory requirement.

9. Class VII. Holders of these permits may transport liquefied petroleum gas by motor vehicle over the highways of the state of Louisiana but shall not sell product in the state.

a. Holders of these permits shall furnish evidence of general liability insurance in the minimum sum of $1,000,000 per automobile liability coverage.

b. Where fuel is used direct from cargo tank, an approved valve with proper excess flow device shall be used. Connector to vehicle's engine shall be approved for such use and protected from mechanical injury.

c. No truck shall be parked on a street or highway at night in any city, town, or village, except for the purpose of serving a customer.

d. The name of the dealer shall appear on all tank trucks which require registration with the commission.

e. Compliance with all other applicable statutes, rules and regulations is a mandatory requirement.

10. Reserved.

11. Class VIII. Holders of these permits may store, transport and sell liquefied petroleum gas used solely in the cutting and metal working industry, sell and install piping and containers for those gases and engage in the filling of approved ASME tanks, ICC or DOT containers used in the metal working industry.

a. Holders of these permits shall furnish evidence of general liability insurance in the minimum sum of $1,000,000 per products, manufacturers and contractors, and automobile liability coverage.

b. The name of the dealer shall appear on all tank trucks which require registration with the commission and storage tank sites.

c. Compliance with all other applicable statutes, rules and regulations is a mandatory requirement.

12. Class IX. Holders of these permits may inspect, recertify and recondition DOT and ICC cylinders. They shall not sell or deliver liquefied petroleum gas or anhydrous ammonia.

a. Holders of these permits shall obtain from DOT a retesters identification number, and provide proof of such to the commission.

b. Holders of these permits shall furnish evidence of general liability insurance in the minimum sum of $1,000,000 per products liability coverage.

c. Holders of these permits shall provide drawing and description of equipment to be installed to retest cylinders. Drawing and description shall be submitted to the office of the director for his approval before installation.

d. Holders of these permits shall maintain an accurate log of all cylinders that have been retested by date, size, manufacturer name, and serial number. The commission reserves the right to inspect such logs at any time through its representative.

e. Compliance with all other applicable statutes, rules and regulations is a mandatory requirement.

13. Registration 1 (R-1). Holders of these registrations shall be a person, firm, or corporation who is engaged in the business of plumbing and holds a master plumber's license issued by the state of Louisiana. They may install liquefied petroleum gas or anhydrous ammonia piping and make alterations or modifications to existing piping systems. These registrations shall be issued by the office of the director upon meeting the applicable requirements of §107 and the following:

a. Holders of these permits shall furnish evidence of general liability insurance in the minimum sum of $1,000,000 per manufacturers and contractors liability coverage.

b. Compliance with the provisions of NFPA Pamphlet Number 54 (*National Fuel Gas Code*) and NFPA Number 58 (*Standard for the Storing and Handling of Liquefied Petroleum Gas*) and ANSI K 61.1-1989 is a mandatory requirement.

c. Compliance with all other applicable statutes, rules and regulations of the commission is a mandatory requirement.

14. Registration 2 (R-2). Holders of these registrations shall be a person, firm, or corporation engaged in the mechanical contracting business. They may install liquefied petroleum gas and/or anhydrous ammonia appliances and equipment, and make alterations or modifications to existing liquefied petroleum gas and/or anhydrous ammonia appliances and equipment. These registrations shall be issued by the office of the director upon meeting the applicable requirements of §107 and the following:

a. Holders of these permits shall furnish evidence of general liability insurance in the minimum sum of $1,000,000 per products and manufacturers and contractors liability coverage.

b. Compliance with the provisions of NFPA Pamphlet Number 54 (*National Fuel Gas Code*) and NFPA Number 58 (*Standard for the Storing and Handling of Liquefied Petroleum Gas*) and ANSI K 61.1-1989 is a mandatory requirement.

c. Compliance with all other applicable statutes, rules and regulations of the commission is a mandatory requirement.

AUTHORITY NOTE: Promulgated in accordance with R.S. 40:1846.

HISTORICAL NOTE: Adopted by the Department of Public Safety, Liquefied Petroleum Gas Commission, November 1972, amended December 1974, amended and promulgated LR 3:315 (July 1977), amended LR 7:633 (December 1981), LR 8:53 (January 1982), amended by the Department of Public Safety and Corrections, Liquefied Petroleum Gas Commission, LR 11:557 (May 1985), LR 12:841 (December 1986), LR 15:855 (October 1989), LR 16:1063 (December 1990), LR 19:904 (July 1993), LR 20:1400 (December 1994), LR 21:701 (July 1995), LR 24:461 (March 1998), LR 25:2411 (December 1999), LR 29:2509 (November 2003), LR 33:1141 (June 2007), effective July 1, 2007, LR 38:1259 (May 2012), LR 41:395 (February 2015), LR 43:967 (May 2017), LR 46:188 (February 2020).

Subchapter B. Dealers

§115. Compliance with Rules and Act

A. All dealers who fail to comply with R.S. 40:1841 et seq., and the rules and regulations of the commission may have their application for permit denied or their permit suspended and/or revoked.

AUTHORITY NOTE: Promulgated in accordance with R.S. 40:1846.

HISTORICAL NOTE: Adopted by the Department of Public Safety, Liquefied Petroleum Gas Commission, November 1972, amended December 1974, amended by the Department of Public Safety and Corrections, Liquefied Petroleum Gas Commission, LR 15:860 (October 1989), LR 24:464 (March 1998), LR 38:1261 (May 2012).

§117. Revocation of Permits

A. The commission may revoke or suspend a permit only by a ruling of the commission based on an adjudication hearing held in accordance with the Administrative Procedure Act. The following are causes for revocation or suspension of a permit:

1. when the commission has assessed two or more penalties against a dealer for willful violation of or failure to comply with such rules and regulations, provided the second or succeeding penalty or penalties have been imposed for violations of or failure to comply, were committed after the imposition of the first penalty;

2. willful or knowing violation of a rule or regulation of the commission which endangers human life or health;

3. failure to properly odorize gas as required by R.S. 40:1846;

4. failure to provide insurance or proof of insurance as required;

5. failure to pay permit fees as required;

6. failure to pay any civil penalty imposed by the commission under provisions of R.S. 40:1846.1(E) within 30 days after the assessment becomes final.

B. The commission shall give 15 days written notice of the date, time and location of a hearing to deny, suspend or revoke a permit, or to impose a fine.

C. Any dealer who continues to operate after such permit is revoked or during the period of such suspension shall be liable to prosecution under provisions hereof in the same manner as if no such permit had ever been issued.

D. The commission may institute civil proceedings to enforce its rulings in the district court for the parish in which the commission is domiciled or in the district court for the parish in which violation which gave rise to the suspension or revocation.

AUTHORITY NOTE: Promulgated in accordance with R.S. 40:1846.

HISTORICAL NOTE: Adopted by the Department of Public Safety, Liquefied Petroleum Gas Commission, November 1972, amended December 1974, amended by the Department of Public Safety and Corrections, Liquefied Petroleum Gas Commission, LR 24:464 (March 1998), LR 38:1261 (May 2012).

§119. Permit Fees

A. All fees pursuant to R.S. 40:1849 shall be paid before a new permit will be issued each year, with the exception of a Class I-E permit. For a Class I-E permit, all fees shall be paid prior to a renewal permit being issued by the commission.

AUTHORITY NOTE: Promulgated in accordance with R.S. 40:1846.

HISTORICAL NOTE: Adopted by the Department of Public Safety, Liquefied Petroleum Gas Commission, November 1972, amended December 1974, amended by the Department of Public Safety and Corrections, Liquefied Petroleum Gas Commission, LR 16:1063 (December 1990), LR 38:1262 (May 2012), LR 47:484 (April 2021).

§121. Expiration of Permit

A. All permits or registrations shall expire at midnight on the date of their expiration.

B. All permits or registrations renewed after their expiration date shall have an administrative penalty of 5 percent of the assessed permit or registration fee for each month or fraction thereof, not to exceed 25 percent of the amount of the assessed permit or registration fee.

C. All permits or registrations renewed after their expiration date shall have administrative interest of 1 percent of the assessed permit or registration fee added for each month or fraction thereof to the amount of the permit or registration fee due.

D. Five days after the expiration of a permit or registration fee renewal date, any dealer continuing in operation without the payment of the fee, administrative penalty, and/or administrative interest due shall be considered as operating in violation of R.S. 40:1841-1853 and the rules and regulations of the commission. The commission may assess a civil penalty in accordance with R.S. 40:1846.1.E or any applicable provision of LAC 55:IX.117.

AUTHORITY NOTE: Promulgated in accordance with R.S. 40:1846.

HISTORICAL NOTE: Adopted by the Department of Public Safety, Liquefied Petroleum Gas Commission, November 1972, amended December 1974, amended by the Department of Public Safety and Corrections, Liquefied Petroleum Gas Commission, LR 16:1063 (December 1990), LR 24:464 (March 1998), LR 27:422 (March 2001), LR 38:1262 (May 2012).

§123. Qualified Personnel

A. All service, installation, fuel transfer personnel, carburetion mechanics, transport and delivery truck drivers shall have a card of competency from the office of the director. New employees shall not make installations, service equipment, handle or deliver gas until they have passed the examination given by the office of the director or furnished proof to the office of the director of their qualifications by another qualified agency acceptable to the commission and a card showing their competency has been issued to them.

AUTHORITY NOTE: Promulgated in accordance with R.S. 40:1846.

HISTORICAL NOTE: Adopted by the Department of Public Safety, Liquefied Petroleum Gas Commission, November 1972, amended December 1974, amended by the Department of Public Safety and Corrections, Liquefied Petroleum Gas Commission, LR 24:464 (March 1998), LR 38:1262 (May 2012).

§125. Report Accidents and Fires

A. Any accident involving liquefied petroleum gas or the transportation of liquefied petroleum gas which causes injury to employees, property damage, or injury to other persons or an accidental release of liquefied petroleum gas reportable under the Louisiana Right-To-Know Law shall be reported by that dealer in writing to the office of the director as soon as possible but not later than 48 hours after the accident. The office of the director shall accept, in lieu of the required report in writing, data and information from the information system established under the Hazardous Materials Information Development, Preparedness and Response Act.

B. Any fire in which liquefied petroleum gas is directly or indirectly involved shall be reported in writing to the office of the director by the dealer servicing that installation within 48 hours of knowledge of the fire, preferably immediately, so that it can be investigated.

AUTHORITY NOTE: Promulgated in accordance with R.S. 40:1846.

HISTORICAL NOTE: Adopted by the Department of Public Safety, Liquefied Petroleum Gas Commission, November 1972, amended December 1974, amended by the Department of Public Safety and Corrections, Liquefied Petroleum Gas Commission, LR 24:465 (March 1998), LR 25:2412 (December 1999), LR 38:1262 (May 2012).

§127. Insurance

A. Insurance requirements for all persons, firms, or corporations with the same class permit or registration shall be the same. New dealer insurance requirements shall be the same as existing dealer requirements.

B. The commission may invoke the applicable provisions of §117 when insurance requirements are not met.

AUTHORITY NOTE: Promulgated in accordance with R.S. 40:1846.

HISTORICAL NOTE: Adopted by the Department of Public Safety, Liquefied Petroleum Gas Commission, November 1972, amended December 1974, amended by the Department of Public Safety and Corrections, Liquefied Petroleum Gas Commission, LR 24:465 (March 1998), LR 38:1262 (May 2012).

§129. Odorizing Gases

A. Odorization and verification of odorization in liquefied petroleum gases shall be in accordance with the following provisions.

1. Except as otherwise provided in this Subchapter, each refinery, commercial storage facility, natural gas processing plant, pipeline, or other person which sell liquefied petroleum gas to a transporter, dealer, or distributor for distribution into the distribution chain to consumers shall odorize the liquefied petroleum gas in accordance with the provisions of this Subchapter.

2. Liquefied petroleum gas shall not be required to be odorized if it is to be delivered to a manufacturer of products of which liquefied petroleum gas forms a component part, to any facility for further processing, to a commercial storage facility, a natural gas processing plant, a refinery, a pipeline, or when odorization would be harmful in further use or processing of the gas and would not serve a useful purpose as a warning agent in further use or processing of the gas.

3. Liquefied petroleum gas, which is required to be odorized, shall be effectively odorized by an approved agent of such character as to positively, by a distinctive odor, the presence of gas down to concentrations in air of not over one-fifth the lower limit of flammability. The presence of odorization, when required, shall be positively verified by the dealer by a sniff test or other means, and the results shall be documented prior to delivery into his bulk plant, or when a shipment bypasses a bulk plant, prior to delivery to a consumer. It is the intent of this Paragraph to prohibit the sale or delivery of liquefied petroleum gas by a dealer to a consumer without the required odorization.

4. The odorization requirement shall be considered to be met by the use of 1 pound of ethyl mercaptan, 1 pound of thiophane, or 1.4 pounds of amyl mercaptan per10,000 gallons of liquefied petroleum gas, subject to the provisions of Paragraph 5 of this Subsection.

5. In order to maintain the minimum concentrations of odorant in the liquefied petroleum gas at the point of use by the consumer, the rules and regulations recommend that each person who is required to odorize gas under this Section use

1 1/2 pounds of odorant per 10,000 gallons of liquefied petroleum gas at the point of odorization.

6. The only approved odorants are those specified in Paragraph 4 of this Subsection; however, the commission may authorize, by rule, the use of other odorants which are equal in effectiveness to the odorants specified in Paragraph 4 of this Subsection.

7. The commission shall require each person who transports liquefied petroleum gas that is exempt from the odorization requirements of this Section to keep records of all purchases of unodorized gas for 3 years. The records shall include bills of lading, loading tickets and records of all deliveries of unodorized gas. Each delivery ticket and bill of lading shall be identified by reference to the bill of lading number.

AUTHORITY NOTE: Promulgated in accordance with R.S. 40:1846.

HISTORICAL NOTE: Adopted by the Department of Public Safety, Liquefied Petroleum Gas Commission, November 1972, amended December 1974, amended by the Department of Public Safety and Corrections, Liquefied Petroleum Gas Commission, LR 11:558 (May 1985), LR 29:2510 (November 2003), LR 38:1262 (May 2012).

§131. Compliance with Rules

A. Compliance with all other statutes, rules and regulations will be required for all permit holders.

AUTHORITY NOTE: Promulgated in accordance with R.S. 40:1846.

HISTORICAL NOTE: Adopted by the Department of Public Safety, Liquefied Petroleum Gas Commission, November 1972, amended December 1974, amended by the Department of Public Safety and Corrections, Liquefied Petroleum Gas Commission, LR 47:484 (April 2021).

§133. Shall Purchase Containers Manufactured by Manufacturers Acceptable to the Authority Having Jurisdiction

A. All liquefied petroleum gas containers purchased shall be manufactured by a manufacturer acceptable to the commission.

B. A manufacturer of liquefied petroleum gas containers shall be listed by the commission as acceptable when it has met or exceeded the requirements of chapter 5, NFPA 58, 2017 edition and provided documentation acceptable to the commission of the same.

AUTHORITY NOTE: Promulgated in accordance with R.S. 40:1846.

HISTORICAL NOTE: Adopted by the Department of Public Safety, Liquefied Petroleum Gas Commission, November 1972, amended December 1974, amended by the Department of Public Safety and Corrections, Liquefied Petroleum Gas Commission, LR 24:465 (March 1998), LR 38:1263 (May 2012), LR 42:427 (March 2016), LR 46:188 (February 2020).

§135. Condemnation of Tanks

A. Any liquefied petroleum gas storage container corroded, pitted or worn to 20 percent of the thickness of the head, shell plate, or stand pipe shall be condemned for further storage of liquefied petroleum gas.

AUTHORITY NOTE: Promulgated in accordance with R.S. 40:1846.

HISTORICAL NOTE: Adopted by the Department of Public Safety, Liquefied Petroleum Gas Commission, November 1972, amended December 1974, amended by the Department of Public Safety and Corrections, Liquefied Petroleum Gas Commission, LR 38:1263 (May 2012).

§139. Liquefied Petroleum Gas Systems

A. A dealer shall not serve any liquefied petroleum gas system which the dealer knows is improperly installed or in a dangerous condition. All improper systems shall be corrected before the dealer services such system with fuel for the first time. A servicing dealer shall not be responsible for unauthorized changes in or failures of an existing system or connected appliances that have been tested, checked and found in compliance with commission rules and regulations.

B. In the interest of safety and for the protection of life and property, any end user who authorizes the maintenance and/or repair, installation, adjustment, and servicing of a liquefied petroleum gas system in the state of Louisiana shall insure that any person, firm, or corporation that may be employed and/or authorized to make such repairs has a current permit or registration and cards of competency from the commission to perform maintenance and/or repair, installation, adjustment and/or servicing of that system.

C. Any end user authorizing any action listed in §139.B, where such actions are completed by any person, firm, or corporation other than the liquefied petroleum gas dealer who normally services the liquefied petroleum gas system, shall notify, as soon as possible, the servicing dealer authorized to service the affected liquefied petroleum gas system. This notification shall include:

1. name of the person, firm, or corporation that performed the service; and

2. actions taken to the affected liquefied petroleum gas systems such as adding piping, space heaters, and other such appliances. The end user shall make the described notification within five working days after completion of the action or before the liquefied petroleum gas system is next serviced with liquefied petroleum gas, whichever occurs first.

D. It is unlawful for any person, firm, or corporation to repair, install, adjust and/or service any liquefied petroleum gas system without meeting the requirements of the commission.

E. No person, firm, or corporation, except the owner, thereof, or person, firm, or corporation authorized in writing by said owner, shall fill, refill, buy, sell, offer for sale, give, take, loan, dispose of, or traffic in, a liquefied petroleum gas container or tank.

F. No individual shall be subject to a criminal fine or imprisonment under §139 as a result of any willful and wrongful acts of a fellow employee or subordinate employee whose willful and wrongful act was carried out without the knowledge of the individual. Whoever is found to be guilty of any of the following acts shall be fined not more than

$50,000, or imprisoned with hard labor for not more than10 years, or both:

1. willful or knowing violation of a rule or regulations of the commission which endanger human life or health;

2. failure to properly odorize gas or to verify the presence of odorant pursuant to R.S. 40:1846 and §129 of this Subchapter.

G. Anyone violating §139 shall also be liable for all damages resulting from any fire or explosion involving that shipment. The liability imposed by §139 shall not be delegated by contract or practice to any transporter or subcontractor responsible for the transportation of the liquefied petroleum gas.

H. A permit may be suspended or revoked by the commission whenever the commission has assessed two or more penalties against a dealer for willful violation of, or failure to comply with, such rules and regulations, provided the second or succeeding penalty or penalties have been imposed for violations of, or failure to comply with the regulations of the commission committed after the imposition of the first penalty or forfeiture, reserving to the dealer the right to resort to the courts for reinstatement of the permit suspended or revoked. The commission may suspend or revoke the permit of any person who fails to pay any civil penalty imposed by the commission under the provisions of R.S. 40:1846l.1(E) within 30 days after the assessment becomes final. Any dealer who continues to operate after such permit is revoked or during the period of such suspension shall be liable to prosecution under the provisions hereof in the same manner as if no such permit had ever been issued. A permit may be revoked or suspended only by a ruling of the commission based on adjudicatory hearing held in accordance with the Administrative Procedure Act. The commission may institute civil proceedings to enforce its rulings in the district court for the parish in which the commission is domiciled or in the district court for the parish in which the violation occurred.

I. No dealer shall service a liquefied petroleum gas system, tank or another dealer after having received notification by the commission that the system, tank or dealer is not in compliance with these rules and regulations. An All Dealers (AD) letter which states that a system, tank or dealer is not in compliance posted on the commission's public website shall constitute notification.

AUTHORITY NOTE: Promulgated in accordance with R.S. 40:1846.

HISTORICAL NOTE: Adopted by the Department of Public Safety, Liquefied Petroleum Gas Commission, November 1972, amended December 1974, amended by the Department of Public Safety and Corrections, Liquefied Petroleum Gas Commission, LR 15:860 (October 1989), LR 24:465 (March 1998), LR 29:2510 (November 2003), LR 38:1263 (May 2012).

§141. Customer Notification

A. Each dealer shall transmit a notice once each year to each customer stating that liquefied petroleum gas systems are potentially dangerous, that a leak in the system could result in a fire or explosion, and that systems should be inspected periodically.

AUTHORITY NOTE: Promulgated in accordance with R.S. 40:1846.

HISTORICAL NOTE: Adopted by the Department of Public Safety, Liquefied Petroleum Gas Commission, November 1972, amended December 1974, amended by the Department of Public Safety and Corrections, Liquefied Petroleum Gas Commission, LR 11:559 (May 1985), LR 38:1264 (May 2012).

§143. Inspections

A. Each dealer facility subject to the regulations of the commission shall submit to an inspection by a representative of the commission.

AUTHORITY NOTE: Promulgated in accordance with R.S. 40:1846.

HISTORICAL NOTE: Adopted by the Department of Public Safety, Liquefied Petroleum Gas Commission, November 1972, amended December 1974, amended by the Department of Public Safety and Corrections, Liquefied Petroleum Gas Commission, LR 11:559 (May 1985), LR 38:1264 (May 2012), LR 42:428 (March 2016).

§145. Dealer Permit Requirements

A. Permits required under these general requirements shall not be transferred. All dealers, regardless of operation, shall hold a permit and are prohibited from operating under a permit of another dealer.

AUTHORITY NOTE: Promulgated in accordance with R.S. 40:1846.

HISTORICAL NOTE: Adopted by the Department of Public Safety, Liquefied Petroleum Gas Commission, November 1972, amended December 1974, amended by the Department of Public Safety and Corrections, Liquefied Petroleum Gas Commission, LR 11:559 (May 1985), LR 38:1264 (May 2012).

Subchapter C. Manufacturers of Liquefied Petroleum Gas Containers

§151. Classification of Containers

A. Containers shall be designed and classified as provided in the applicable Sections of the Chapter 5, National Fire Protection Association Pamphlet Number 58, 2008 edition.

AUTHORITY NOTE: Promulgated in accordance with R.S. 40:1846.

HISTORICAL NOTE: Adopted by the Department of Public Safety, Liquefied Petroleum Gas Commission, November 1972, amended December 1974, LR 7:634 (December 1981), amended by the Department of Public Safety and Corrections, Liquefied Petroleum Gas Commission, LR 24:466 (March 1998), LR 38:1264 (May 2012).

Subchapter D. Forms and Reports

§159. Required Forms and Reports

A. The following forms and/or reports shall be filed with the Office of the Director.

1. Installation Reports shall be properly completed and witnessed by the customer or his/her authorized representative. This includes installed or re-installed tanks

and the completed form shall be maintained in the dealer's files. These documents shall be made available to the commission within 15 days of request. Pressure tests shall be documented on the installation report when a container is installed or reinstalled. In other cases where pressure tests are required (See §167 and §175), the pressure tests may be filed with the commission on an installation report form and noted as such. Documentation of pressure tests shall be maintained by the dealer.

2. Sketches shall be filed with the office of the director for initial approval. Final approval shall be granted by the office of the director after installation but prior to placing into service the following liquefied petroleum gas systems:

a. dealer bulk storages;

b. liquid withdrawal systems, except systems for private use;

c. places of public assembly, schools, churches, hospitals, nursing homes and other similar systems (either liquid or vapor systems);

d. automatic dispensers used for motor fuel as required by LAC 55:IX.163.C;

e. sketches for Class VI-X installations shall be filed with the office of the director for initial approval. The commission reserves the right to allow this installation to be placed in service prior to final inspection. Upon inspection, if this installation is deemed to be out of compliance with the commission's rules and regulations, the servicing dealer shall remove all LPG cylinders from the installation within 24 hours. Dealer shall correct all deficiencies and then request a final inspection and approval of the installation. The installation shall remain out of service until final approval is granted by the commission.

3. reports of fires and accidents in accordance with §125.

4. documentation in accordance with §147.

5. proof of insurance or financial security in accordance with §107.A.3 or §107.A.3.a.

6. drawings in accordance with §113.A.11.c.

7. Reports in accordance with §107.A.6.a.

8. Location approval forms shall be in accordance with §113.A.3.b.

Location Approval Form

The submission of this form by a Class III dealer representative does not absolve the dealer of following the rules and regulations established by this Commission concerning the storage of liquefied petroleum gas. Due to the fact that all requisite details are not submitted regarding the storage locations referred to on this this form, it is, therefore assumed when approval is made on the information submitted, details regarding information not provided will comply with all regulations. Any changes to the cylinder location will require a new form to be submitted.

Name of Class III dealer submitting this form:_____
Name of Dealer supplying gas:_____

Is storage location protected from vehicular impact? ___Yes ___No

Is storage location: _____ inside building or _____outside building?

Is storage location the proper distance from electrical equipment, ignition sources, doors and windows? _____Yes _____No

Is Name of Class III Dealer, Supplier and 24 hour Emergency Contact on storage location? ____Yes ____No

Is all the proper signage displayed at storage location? ____Yes ____No

Does the public have access to the cylinder storage location? ____Yes ____No

If yes, please ensure sketch is submitted by properly permitted dealer.

Contact information for someone at cylinder location:
Name _____
Telephone Number _____

Please give brief description of storage area including distances to permanent reference points:
_____
_____

All information submitted on this form has been verified as correct, and it is understood that any changes to this form shall require a new form to be submitted.

Signed (person in charge of insuring correctness of this form)

X_____
Date:_____

FEE $150.00

AUTHORITY NOTE: Promulgated in accordance with R.S. 40:1846.

HISTORICAL NOTE: Adopted by the Department of Public Safety, Liquefied Petroleum Gas Commission, November 1972, amended December 1974, amended by the Department of Public Safety and Corrections, Liquefied Petroleum Gas Commission, LR 11:559 (May 1985), LR 15:861 (October 1989), LR 24:466 (March 1998), LR 38:1265 (May 2012), LR 41:395 (February 2015), LR 43:968 (May 2017).

Subchapter E. Automatic Dispensers Used for Motor Fuel

§163. Automatic Dispensers Used for Motor Fuel

A. All self-service automatic dispensing stations shall obtain a class VI permit with the LP Gas Commission before engaging in business.

B. The filling of ICC or DOT cylinders at a self-service site is prohibited.

C. Step-by-step operating instructions and fire emergency telephone numbers shall be posted in a conspicuous place in the immediate vicinity of the automatic dispenser.

D. All dispenser meters shall be calibrated at least once every two years. Calibration reports shall be retained by the dealer for at least three years. The commission reserves the right to review the calibration reports upon demand.

AUTHORITY NOTE: Promulgated in accordance with R.S. 40:1846.

HISTORICAL NOTE: Promulgated by the Department of Public Safety and Corrections, Liquefied Petroleum Gas Commission, LR 20:1402 (December 1994), amended LR 24:467

(March 1998), LR 38:1265 (May 2012), LR 41:396 (February 2015).

Subchapter F. Tank Trucks, Semi-Trailers and Trailers

§165. Measurement

A. All trucks delivering liquefied petroleum gas for domestic use shall be equipped with a suitable measuring device which shall be used to accurately gauge the amount of gas placed in each system, either by meter or by weight.

B. Truck meters shall be calibrated at least once every two years or every 1 million gallons of gas delivered, whichever occurs first. Calibration reports shall be retained by the dealer in his truck file for at least three years. The commission reserves the right to review calibration reports upon demand.

AUTHORITY NOTE: Promulgated in accordance with R.S. 40:1846.

HISTORICAL NOTE: Promulgated by the Department of Public Safety and Corrections, Liquefied Petroleum Gas Commission, LR 20:1402 (December 1994), amended LR 24:467 (March 1998), LR 38:1266 (May 2012).

§166. Truck/Delivery Truck Cargo Containers Compliance Requirements

A. Registration. Dealers that operate transport and/or delivery trucks in the state of Louisiana shall register each unit with the commission annually, the annual registration fee is $50 for each unit registered. The annual registration period and procedure will be established by the Office of the Director of the commission. Any transport and/or delivery truck operating over the highways of the state of Louisiana with no registration decal or an expired registration decal affixed to the unit will be considered in violation of commission regulations and subject to penalties, this includes any unit operating beyond the established registration period without a current registration affixed to the unit. It is unlawful to load or unload any cargo unit not meeting commission regulations.

B. Safety Inspections. It is incumbent upon dealers and drivers to insure that all transports and/or delivery trucks being operated over the highways of Louisiana meet all federal and state requirements. The commission reserves the right to inspect any transport and/or delivery truck being registered at any time. Inspections may be performed by commission inspectors or a qualified agency acceptable to the commission. Dealer safety inspections performed by a commission inspector outside the state of Louisiana shall be solely at the discretion and procedures established by the Office of the Director.

AUTHORITY NOTE: Promulgated in accordance with R.S. 40:1846.

HISTORICAL NOTE: Promulgated by the Department of Public Safety and Corrections, Liquefied Petroleum Gas Commission, LR 24:467 (March 1998), amended LR 25:2412 (December 1999), LR 27:2256 (December 2001), LR 38:1266 (May 2012), LR 41:396 (February 2015).

§167. "Out-of-Gas Customers" or Interruption of Service Procedure

A. When a delivery of gas is made to any on-site container which is out of gas or the liquefied petroleum gas service was interrupted, the servicing dealer shall follow the following procedures.

1. When "out-of-gas customer" is not present and the container is serviced:

a. shut off the container service valve;

b. place a tag on the container and the residence, the building, or the equipment the container services indicating the container is out-of-service. The tag shall inform the gas customer to contact a liquefied petroleum gas dealer or other qualified agency to perform a leak check or test on the system as required before turning on the container. Further action is the responsibility of the customer. If the customer places the system back into service without the required test, he assumes liability for the system.

2. When "out-of-gas customer" is present and the container is serviced:

a. shut off the container service valve;

b. inform the gas customer the container is out of service and a qualified agency shall perform a leak check or test on the system as required before turning on the container. Further action is the responsibility of the customer. If the customer places the system back into service without the required test, he assumes liability for the system.

AUTHORITY NOTE: Promulgated in accordance with R.S. 40:1846.

HISTORICAL NOTE: Promulgated by the Department of Public Safety and Corrections, Liquefied Petroleum Gas Commission, LR 20:1403 (December 1994), amended LR 24:467 (March 1998), LR 33:1142 (June 2007), effective July 1, 2007, LR 38:1266 (May 2012).

§169. Maintenance

A. All piping and auxiliary equipment shall be maintained in good mechanical condition at all times so as to eliminate in so far as possible all hazards to safe operation.

B. Vehicles and all components of vehicles shall be maintained in good mechanical condition at all times so as to prevent hazards to safe operation.

AUTHORITY NOTE: Promulgated in accordance with R.S. 40:1846.

HISTORICAL NOTE: Promulgated by the Department of Public Safety and Corrections, Liquefied Petroleum Gas Commission, LR 20:1403 (December 1994), LR 38:1267 (May 2012).

Subchapter G. Systems Utilizing ASME and D.O.T. Containers

§171. Storage Capacity Requirements

A. The minimum capacity of above ground ASME storage containers shall be 100 gallon tank capacity for each 100,000 BTU appliance load. Tankless water heaters shall be

rated at 50 percent of their input rating when calculating appliance load. Exception: D.O.T. Containers of 4 lbs. though 100 lbs. capacity are exempt from this requirement when connected to small portable appliances or outdoor cooking appliances with input ratings of 100,000 btu/hr. or less. Other exceptions to this rule shall be approved by the director.

AUTHORITY NOTE: Promulgated in accordance with R.S. 40:1846.

HISTORICAL NOTE: Promulgated by the Department of Public Safety and Corrections, Liquefied Petroleum Gas Commission, LR 20:1403 (December 1994), amended LR 33:1142 (June 2007), effective July 1, 2007, LR 38:1267 (May 2012).

§172. Maintenance

A. ASME and DOT containers, container appurtenances, piping, and equipment connected thereto shall be maintained in good mechanical condition at all times. No leaks or unsafe conditions shall exist.

AUTHORITY NOTE: Promulgated in accordance with R.S. 40:1846.

HISTORICAL NOTE: Promulgated by the Department of Public Safety and Corrections, Liquefied Petroleum Gas Commission, LR 25:2412 (December 1999), amended LR 38:1267 (May 2012).

§175. Pressure Test, Leak Checks, and Inspection Required

A. Pressure Tests

1. Shall be performed on all new piping systems and on piping systems that has been modified or had new piping added.

2. The length of time of the pressure test shall be not less than 1/2 hour for each 500 cubic feet of pipe volume or fraction thereof, except when pressure testing less than 10 cubic feet of pipe volume or a single family dwelling, the duration of the test may be reduced to 15 minutes.

3. The test pressure of the Pressure Test shall be 1 1/2 times the proposed operating pressure of the system but in no case less than 3 psig.

4. There shall be no gain or loss in pressure during the test. If leakage is indicated, the system shall be repaired and a new pressure test performed before placing in service.

5. The pressure source shall be isolated before the test.

6. No underground piping shall be covered until after inspection and the pressure test are made.

7. Pressure tests shall be documented in the dealer's files.

B. Leak Checks

1. Low Pressure Leak Checks

a. Shall be used on systems that receive gas at pressures of 1/2 psig or less.

b. Shall be performed the first time a tank, piping system and appliances are connected for use.

c. Shall be performed in any suspected leak situation.

d. Shall be performed the first-time service of a new customer.

e. Shall be performed in all out-of-gas and interruption of service situations. A High Pressure Leak Check will be permitted in lieu of the Low Pressure Leak Check if the dealer has documented in his files a Low Pressure Leak Check within the past 12 months for that customer or has filed such documentation with the office of the director within the past 12 months for that customer.

f. The length of time for this test shall be 3 minutes.

g. The test pressure for this test shall be 9 inches + or - 1/2 inch of water column or equivalent.

h. Low Pressure Leak Checks shall be documented in the dealer's files.

i. This leak check shall include all regulators, including appliance regulators and control valves in the system. Accordingly each individual equipment shutoff valve should be supplying pressure to its appliance for this leak check. This leak check shall prove the integrity of the 100 percent pilot shutoff of each gas valve so equipped, so the manual gas cock of each gas valve incorporating a100 percent pilot shutoff should be in the "on" position. Pilots not incorporating a 100 percent pilot shutoff valve and all manual gas valves not incorporating safety shutoff systems shall be placed in the "off" position prior to this leak check.

j. When leakage is indicated, repairs shall be made and a new leak check performed before placing the system back into service.

k. The following protocol shall be used for performing this leak check. Insert a water manometer or equivalent gauge into the system downstream of the final stage regulator, pressurizing the system with either fuel gas or another approved test medium to full operating pressure, close pressure service valve, observe gauge reading, lockup, should be between 10-14 inches of water column or equivalent, then release enough test medium through a range burner or other suitable means to drop the system pressure to 9 inches + or -1/2 inch in water column or equivalent. This ensures that all regulators are unlocked and the entire system is communicating to the gauging device. There shall be no loss or gain in pressure for a period of three minutes.

2. High Pressure Leak Checks

a. This leak check may be used on a system that receives gas at 1/2 psig or less, when a Low Pressure Leak Check has been performed and documented within the past 12 months by the dealer for that system. This type leak check may be performed once annually when access to the gas utilization equipment is not accessible.

b. This leak check may be used on systems that receive gas at pressures greater than 1/2 psig but less than tank pressure.

c. The length of time for this leak check is 3 minutes.

d. The test pressure for this leak check is 10 pounds below tank pressure.

e. These tests shall be documented in the dealer's files.

f. When leakage is indicated, repairs shall be made and a new leak check performed before placing the system into service.

g. The following protocol shall be used for this leak check. By inserting a pressure gauge between the container gas shutoff valve and the first stage regulator in the system, admitting full container pressure to the system and then closing the container shutoff valve. Enough gas should then be released to lower the pressure reading by 10 psi. System should then be allowed to stand for 3 minutes without an increase or decrease in the pressure gauge reading. This method will indicate if there is an open line, open valve, a standing pilot open or leak anywhere in the system and can be used only under the conditions stated in §175 B(2)(a) and (b) of this Section.

3. In out-of-gas or interruption of service situations and a leak check cannot be performed by the dealer, the procedure in §167 of this Code shall be used or the container cannot be serviced.

C. Inspections

1. Inspections shall be performed any time a pressure test, a high pressure leak check, or a low pressure leak check is performed. Exception: if the dealer has documented in his files an inspection of the system within the past 12 months for that system, no inspection is required.

2. Inspection shall include installation workmanship, all visible piping materials, connectors, appliances and other materials to ensure all materials, connectors, valves and appliances are approved for liquefied petroleum gas use.

3. Inspection shall include proper appliance installation and proper flame performance characteristics for the appliances.

4. Any materials, connectors, valves, appliances, or installation workmanship not in compliance with the codes shall be repaired, replaced, or disconnected.

5. Documentation that the inspection was performed shall be made by the dealer and retained in his files.

AUTHORITY NOTE: Promulgated in accordance with R.S. 40:1846.

HISTORICAL NOTE: Promulgated by the Department of Public Safety and Corrections, Liquefied Petroleum Gas Commission, LR 20:1403 (December 1994), amended LR 24:468 (March 1998), LR 24:2312 (December 1998), LR 29:2510 (November 2003), LR 33:1142 (June 2007), effective July 1, 2007, LR 38:1267 (May 2012).

§177. Appliance Installation and Connections

A. Use of Approved Appliances. Domestic and commercial gas consuming appliances shall not be installed unless their correctness to design, construction and performance is certified by one of the following:

1. determined by a nationally recognized testing agency adequately equipped and competent to perform such services and shall be evidenced by the attachment of its seal or label to such gas appliance. This agency shall maintain a program of national inspection of production models of gas appliances at least once each year on the manufacturer's premises. Approval by the American Gas Association Laboratories (AGA) as evidenced by the attachment of its listing symbol or approval seal to gas appliances and a certificate or letter certifying approval under the abovementioned requirements or listing by Underwriter's Laboratories Inc. (UL) be considered as constituting compliance with the provisions of this Section;

2. approved by the commission.

B. Appliance Installation and Connection

1. An appliance shall be installed in accordance with its manufacturer's instructions.

2. In the absence of complete manufacturer's instructions on installation of any appliances, installation shall be in accordance with the edition of NFPA Number 54, the National Fuel Gas Code, adopted by the commission.

C. Exceptions

1. Existing installations, where piping outlets and appliances were installed in accordance with regulations which were in effect at the time of such installation, shall remain approved. This exception includes the removal of existing appliances for servicing or replacement of appliances with the same type or of equal or better quality. This exception does not allow adding new piping, appliance locations, or new appliances where there was no pre-existing appliance without meeting §177A. and B.

2. Installation of Heaters in Residences. The following liquefied petroleum gas room heaters may be installed in a residence that is a one or two family dwelling and that is not a manufactured home, mobile home, or a modular home.

a. A listed wall-mounted liquefied petroleum gas unvented room heater equipped with an oxygen depletion safety shut-off system may be installed in the bathroom of a one or two family, residential dwelling provided that the input rating shall not exceed 6,000 Btu per hour, and combustion and ventilation air is provided in accordance with Paragraph 10.1.2 of the National Fuel Gas Code, NFPA-54, that the commission adopted.

b. A listed wall-mounted liquefied petroleum gas unvented room heater equipped with an oxygen depletion safety shut-off system may be installed in the bedroom of a one or two family, residential dwelling provided that the input rating shall not exceed 10,000 Btu per hour, and combustion and ventilation air is provided in accordance with Paragraph 10.1.2 of the National Fuel Gas Code, NFPA-54, that the commission adopted.

3. Liquefied petroleum gas room heaters may be installed in used manufactured homes, mobile homes and modular homes as follows if they are:

a. liquefied petroleum gas listed vented heaters equipped with a 100 percent safety pilot and vent spill switch; and

b. liquefied petroleum gas listed unvented room heaters equipped with a factory oxygen depletion safety shut-off system; and

c. they are not installed in sleeping quarters or bathrooms; and

d. their installation is not prohibited by the appliance manufacturer's instructions; and

e. the input rating of the heater(s) does not exceed 20 Btu per hour per cubic foot of space; and

f. combustion and ventilation air is provided as specified in Part 9.3 of the National Fuel Gas Code, NFPA-54, 2018 edition, that the commission has adopted.

4. Exceptions, other than those listed herein, shall be approved by the director of the commission.

AUTHORITY NOTE: Promulgated in accordance with R.S. 40:1846.

HISTORICAL NOTE: Promulgated by the Department of Public Safety and Corrections, Liquefied Petroleum Gas Commission, LR 20:1403 (December 1994), amended LR 24:469 (March 1998), LR 25:2412 (December 1999), LR 38:1268 (May 2012), LR 46:189 (February 2020).

Subchapter H. Specification for Liquefied Petroleum Gas Installations at Schools and Places of Public Assembly

§179. Requirements for Plans and Specifications

A. Sketches and specifications including plot plans shall be submitted to the office of the director for approval before installation.

B. Sketch and specifications shall show the following:

1. type of building (frame, masonry, metal walls, etc.);

2. elevation from ground level to building;

3. the size and location of all gas piping and length of runs;

4. the size and location of the tank or container;

5. the location and Btu rating of all appliances;

6. the total Btu load;

7. all other details related to the proposed installation as required in §179.

C. The following is a clarification of the requirements for new sketches at schools, churches, nursing homes, and other places of public assembly.

1. Where any additional piping is added, the installation of a new appliance or the change out of an appliance with one with a higher BTU load, a new sketch is required to be submitted to the office of the director for approval.

2. Replacement of a storage tank or container requires a new sketch to be submitted to the office of the director for approval.

3. A new sketch is required when changing fuel suppliers at all places of public assembly, even when no changes are made in the liquefied petroleum gas system.

D. In all cases, an installation report is required with the installation of a container, tank, or cylinder at schools, churches, nursing homes, and other places of public assembly.

E. The commission reserves the right to make a final inspection and witness a pressure test through an inspector of the commission before approving the sketch and allowing the system to be placed into service at all schools, churches, nursing homes, and other places of public assembly.

F. The minimum capacity of storage containers, tanks, or cylinders shall be 100 gallons capacity per each 100,000 Btu appliance load at all schools, churches, nursing homes, and other places of public assembly. Exceptions to this rule may be made by the director of this commission.

G. Fences are required for storage containers, tanks, and cylinders at all schools, all nursing homes, and all churches with schools or day-care facilities on site. Fences may be required at other places of public assembly when deemed necessary in the interest of public safety by the office of the director. The commission may approve a request for an exemption from the fencing requirements under extenuating circumstances.

AUTHORITY NOTE: Promulgated in accordance with R.S. 40:1846.

HISTORICAL NOTE: Promulgated by the Department of Public Safety and Corrections, Liquefied Petroleum Gas Commission, LR 20:1404 (December 1994), amended LR 24:470 (March 1998), LR 31:2568 (October 2005), LR 38:1269 (May 2012).

Subchapter I. Adoption of Standards

§181. National Fire Protection Association Pamphlet Numbers 54 and 58

A. The Liquefied Petroleum Gas Commission hereby adopts the *National Fuel Gas Code*, 2018 edition. The National Fire Protection Association designation is NFPA 54 2018. The Liquefied Petroleum Gas Commission also adopts the *Liquefied Petroleum Gas Code*, 2017 edition. The National Fire Protection Association designation is NFPA 58 2017 edition.

B. The commission may adopt subsequent editions of these standards by a rule change in accordance with the Administrative Procedure Act.

C. Any published Liquefied Petroleum Gas Commission rules and regulations shall take precedence over the standards referenced and adopted in §181.A.

D. The commission reserves the right to make an exception to §181.A, as it applies to local conditions as it deems necessary in the interest of public safety.

1. Any installation that is in use and was installed in Louisiana that meets previous rules and regulations promulgated by this commission may remain in use until the systems require evacuation or replacement. Upon evacuating or replacing any installation, the system shall comply with §181.A.

E. The following are exceptions to the code and standards referenced in §181.A.

1. Pursuant to §6.27.3.16, *Shut-Off Valve on End of Transfer Hose*, NFPA 58-2017 edition, the provisions of §6.27.3.16 shall be considered met in Louisiana if a listed quick-acting shut off valve with positive lock off or a listed globe valve is installed at the discharge end of the transfer hose.

2. Pursuant to §7.4.3.1, NFPA 58-2017 edition, the maximum permitted filling limit for any container, where practical, shall be determined by weight. DOT specification cylinders of 200 lbs. propane capacity or less that are in commerce or transportation shall be filled by weight only. Exceptions:

a. DOT cylinders filled from bobtails at customer facilities, if equipped for filling by volume and are not transported over the highways of the state of Louisiana. An example is forklift cylinders filled by bobtails and used on premises and not placed in transportation over the highways of the state of Louisiana;

b. DOT cylinders filled by customers from customer tank facilities, if equipped for filling by volume and are not transported over the highways of the state of Louisiana. An example is forklift cylinders filled by customers from their tanks and used on their premises and not placed in transportation over the highways;

c. DOT cylinders that are permanently affixed if equipped for filling by volume. Examples are motor fuel tanks or DOT cylinders permanently affixed to recreational vehicles.

3. Pursuant to §9.3.2.9, NFPA 58-2017 edition, clarification for cylinders being transported. Liquefied petroleum gas cylinders having a 4 pound liquefied petroleum gas capacity or greater shall be transported having the relief valve in communication with the vapor space of the cylinder.

4. Pursuant to §8.4.2.2, NFPA 2017 edition, the following provisions shall be met:

a. All curb stops used as crash protection shall be at least 5 feet from the cage, 5 inches high and staked into the ground.

b. All posts, if used as crash protection, shall be metal at least 2 inches in diameter, 20 inches above ground level, at least 2 feet from the cage and no more than 4 feet apart.

c. Each cage shall have a "No Smoking" sign, the name of the permit holder and the suppliers name affixed to the cage.

d. All ignition sources, including any appliances, or the cabinets of appliances, such as coke machines, water coolers, electric dispensing machines etc., shall be at least 5 feet from the cage.

e. Cages shall be at least 5 feet from points of public gatherings such as pay phones, benches, smoking areas, and break areas.

f. Cages housing L.P. Gas Dot cylinders shall be located a minimum of 5 feet from any line of adjoining property.

5. Pursuant to §6.8.1.6, *Flotation Prevention-Clarification*, NFPA 58-2017 edition, installations requiring floatation prevention measures may use either the commission's guidelines or use methods or products from a qualified agency with proper documentation acceptable to the commission.

6. Pursuant to §6.21.2.1, *Installation of Liquid Transfer Facilities*, NFPA 58-2017 edition, when vented liquefied petroleum gas is used as the sole method of transferring liquid liquefied petroleum gas from one container to another (i.e. pressure differential, gravity filing), the distances in table 6.7.2.1 shall be doubled.

7. Pursuant to §6.26, *L. P. Gas on Vehicles (other than engine fuel systems)*, NFPA 58- 2017 edition, the office of the director may establish inspection procedures (including decals of approval) for mobile units utilizing liquefied petroleum gas to fuel appliances. These inspection procedures would be in addition to applicable regulations of NFPA 58, 2017 edition.

8. Pursuant to NFPA 58-2017 edition, *Vehicle Barrier Protection (VBP)*, as defined in Section 3.3.88 and to protect containers from vehicular impact installed in the scope of Chapter 6 of the this edition, including but not limited to *Vehicle Fuel Dispensers and Dispensing Systems* in Section 6.27, dealers may use either the commission's guidelines established, or use methods or products from a qualified agency, including engineers with proper documentation acceptable to the commission that adequate vehicle barrier protection has been provided.

AUTHORITY NOTE: Promulgated in accordance with R.S. 40:1846.

HISTORICAL NOTE: Promulgated by the Department of Public Safety and Corrections, Liquefied Petroleum Gas Commission, LR 20:1404 (December 1994), amended LR 24:470 (March 1998), LR 25:1263 (July 1999), LR 25:2412 (December 1999), LR 27:2257 (December 2001), LR 31:2568 (October 2005), LR 37:913 (March 2011), LR 38:1269 (May 2012), LR 46:189 (February 2020).

§183. Use of Liquefied Petroleum Gas as a Refrigerant Prohibited

A. No person, firm, or corporation shall use, sell, or distribute liquefied petroleum gas for use in mobile air conditioning systems.

B. Hydrocarbon refrigerants containing liquefied petroleum gasses is strictly prohibited for sale, storage inside buildings and use in refrigeration systems within the borders of the state of Louisiana. Specific exceptions to this regulation can be found in the United States Environmental Protection Agency (EPA) regulations 40 CFR Part 82.

C. To determine if a refrigerant is liquefied petroleum gas, the proper shipping name shall be used. Proper shipping names with a U.N. number and a hazard class and division number of liquefied petroleum gas per the DOT hazardous materials tables shall be prima facie evidence that the refrigerant is liquefied petroleum gas and is prohibited.

D. Any advertising or other literature published by the manufacturer of a refrigerant promoting it as a replacement or drop-in for CFR-12 or HFC 134a, or both, shall be prima facie evidence that it is being sold for mobile air conditioning systems and is prohibited.

AUTHORITY NOTE: Promulgated in accordance with R.S. 40:1846.

HISTORICAL NOTE: Promulgated by the Department of Public Safety and Corrections, Liquefied Petroleum Gas Commission, LR 23:990 (August 1997), amended LR 29:2511 (November 2003), amended LR 38:1271 (May 2012), LR 42:428 (March 2016).

Chapter 2. School Bus and Mass Transit Installations [Formerly Chapter 12]

Editor's Note: This Chapter applies to liquefied petroleum gas systems supplying liquefied petroleum gas to propel school buses and mass transit vehicles.

§201. Registration/Inspection of School Bus/Mass Transit Vehicles

A. Prior to placing in service any school bus or mass transit vehicle installed with a liquefied petroleum gas system used as a motor fuel system, the owner shall register the unit with the Office of the Director or the LP Gas Commission. The Office of the Director shall establish a procedure to register, perform inspections, and affix decals on these vehicles on a periodic basis.

B. It shall be a violation of commission regulations for an owner to operate any school bus/mass transit vehicle which is propelled by liquefied petroleum gas, to which a current registration decal is not permanently affixed.

C. A liquefied petroleum gas dealer or owner shall not fuel any school bus/mass transit vehicle which is propelled by liquefied petroleum gas to which a current registration decal is not permanently affixed.

AUTHORITY NOTE: Promulgated in accordance with R.S. 40:1846.

HISTORICAL NOTE: Promulgated by the Department of Public Safety and Corrections, Liquefied Petroleum Gas Commission, LR 18:866 (August 1992), amended LR 24:471 (March 1998), LR 26:1488 (July 2000), LR 38:1271 (May 2012), LR 41:396 (February 2015).

§205. Installation of Liquefied Petroleum Gas Systems Used as Engine Fuel System for School Bus/Mass Transit Vehicles

A. Installation of a liquefied petroleum gas system used as an engine fuel system for school bus/mass transit vehicles shall be in accordance with the applicable sections of Chapter 11 of the NFPA 58 of the 2017 edition that the commission has adopted.

AUTHORITY NOTE: Promulgated in accordance with R.S. 40:1846.

HISTORICAL NOTE: Promulgated by the Department of Public Safety and Corrections, Liquefied Petroleum Gas Commission, LR 24:471 (March 1998), amended LR 26:1488 (July 2000), LR 38:1271 (May 2012), LR 41:396 (February 2015), LR 46:189 (February 2020).

§207. Fueling

A. Vehicles covered in this Chapter are prohibited from being fueled at schools and other places of public assembly within 50 feet of the property line.

B. Vehicles are prohibited from being fueled while passengers are on board or within 50 feet of liquid transfer.

AUTHORITY NOTE: Promulgated in accordance with R.S. 40:1846.

HISTORICAL NOTE: Promulgated by the Department of Public Safety and Corrections, Liquefied Petroleum Gas Commission, LR 18:866 (August 1992), amended LR 24:472 (March 1998), LR 38:1272 (May 2012).

Chapter 3. Emergency Powers

§301. Procedure

A. During a declared emergency or disaster by the governor, the commission may delegate authority to the director for the purposes of waving any rule under Part IX of Title 55 that does not materially affect safety.

B. The delegation shall be by majority vote of the commission.

C. If the commission cannot meet in person to vote on the delegation due to an inability to travel because of the declared emergency or disaster, the director may make contact with each commissioner by any form of communications available at the time.

D. The director shall make a written record of each vote cast by the individual commissioners. This record shall contain:

1. the date of the vote;

2. the name of the commissioners available for vote;

3. the method of communication used to contact each commissioner including any contact information;

4. the affirmative or negative vote of each commissioner.

E. If the director cannot contact enough commissioners to constitute a quorum, he may act on behalf of the commission during the declared emergency or disaster. Once the commission is able to meet, it shall review all exemptions granted by the director during the declared emergency or disaster. The commission may ratify any actions taken on behalf of the commission by the director.

F. The emergency powers of the director under this Section shall expire upon either of the following:

1. a majority vote of the commission;

2. the expiration of the declaration of emergency or disaster by the governor.

AUTHORITY NOTE: Promulgated in accordance with R.S. 40:1846.

HISTORICAL NOTE: Promulgated by the Department of Public Safety and Corrections, Liquefied Petroleum Gas Commission, LR 36:2571 (November 2010), amended LR 38:1272 (May 2012).

Chapter 5. Rulemaking Petitions

§501. Submission of a Rulemaking Petition

A. In accordance with R.S. 49:953(C)(1), any interested person may petition an agency to adopt a new rule, or to amend or repeal an existing rule.

B. To petition the Liquefied Petroleum Gas Commission, commonly known as and hereafter referred to as the LP Gas Commission, for the adoption, amending or repeal of any rule, an interested person shall submit in writing the Department of Public Safety's petition for rulemaking form to the LP Gas Commission at 7919 Independence Boulevard, Baton Rouge, LA 70806, Attn: Rulemaking Petition, which contains the following basic information organized and captioned:

1. the petitioner's name and address;

2. the specific rulemaking agency to be petitioned within the Department of Public Safety as listed on the form;

3. a brief description of the facts or justification supporting the petitioner's request for the adoption of a rule or the amending of a rule that has already been adopted;

4. suggested specific language or language setting forth the substance of the proposed rule or rule change that is being requested, which may be attached to, or in addition to, the petition for rulemaking form;

5. a copy of each and every document upon which the petitioner bases the petitioner's request for a rule or a citation of the information and where it can be easily obtained for review by the rulemaking agency;

6. the petitioner's signature and date of signature.

C. The Department of Public Safety's petition for rulemaking form can be found on the official website of the LP Gas Commission.

AUTHORITY NOTE: Promulgated in accordance with Act 454 of the 2018 Regular Legislative Session and R.S. 49:953, et seq.

HISTORICAL NOTE: Promulgated by the Department of Public Safety and Corrections, Liquefied Petroleum Gas Commission, LR 46:700 (May 2020).

§503. Consideration of a Rulemaking Petition

A. Upon receipt of a petition for rulemaking form, the executive director shall forward the petition to the agency designee. The agency designee shall review the petition for completeness pursuant to the requirements listed in LAC 55:IX.501.B. If the petition is found to be complete, the agency designee shall consider the petition.

B. Within 90 days of receipt of the petition, the executive director or the agency designee shall either:

1. initiate rulemaking procedures to adopt a new rule, or to amend an existing rule; or

2. notify the petitioner in writing of the denial to proceed with rulemaking, stating the reason(s) therefore.

C. Whenever the executive director or the agency designee determines that a public hearing should be held prior to the adoption of any rule or rule change, a notice of the meeting date, time and place will be published in the *Louisiana Register*.

AUTHORITY NOTE: Promulgated in accordance with Act 454 of the 2018 Regular Legislative Session and R.S. 49:953, et seq.

HISTORICAL NOTE: Promulgated by the Department of Public Safety, Liquefied Petroleum Gas Commission, LR 46:700 (May 2020).

Chapter 15. Sale, Storage, Transportation and Handling of Anhydrous Ammonia

NOTE: This Chapter applies specifically to the sale, storage, handling, and transportation of anhydrous ammonia over Louisiana highways and the sale, construction and use of anhydrous ammonia containers and equipment.

Subchapter A. New Dealers

§1501. Prerequisite

A. As a prerequisite to engage in the anhydrous ammonia business in the state of Louisiana, an applicant shall first comply with the applicable rules and regulations of the commission.

AUTHORITY NOTE: Promulgated in accordance with R.S. 3:1354. Effective August 15, 2010, Act 579 of the 2010 Regular Session repealed R.S. 3:1354 and enacted R.S. 40:1911 et seq., and particularly R.S. 40:1914 as authority for anhydrous ammonia regulations.

HISTORICAL NOTE: Adopted by the Department of Agriculture, Anhydrous Ammonia Commission (January 1967), amended by the Department of Public Safety and Corrections, Liquefied Petroleum Gas Commission, LR 19:898 (July 1993), LR 38:1272 (May 2012).

§1503. Definitions

Mobile Air Conditioning System—mechanized vapor compression equipment which is used to cool the driver's or passenger's compartment of any motor vehicle.

AUTHORITY NOTE: Promulgated in accordance with R.S. 3:1354. Effective August 15, 2010, Act 579 of the 2010 Regular Session repealed R.S. 3:1354 and enacted R.S. 40:1911 et seq., and particularly R.S. 40:1914 as authority for anhydrous ammonia regulations

HISTORICAL NOTE: Adopted by the Department of Agriculture, Anhydrous Ammonia Commission (January 1967), amended by the Department of Public Safety and Corrections, Liquefied Petroleum Gas Commission, LR 19:898 (July 1993), LR 38:1272 (May 2012).

§1505. Applications

A. Any person, firm, or corporation desiring to enter the anhydrous ammonia business in the state of Louisiana shall file formal application for a permit with the commission. These applications for permits shall be administratively granted by the office of the director upon complying with all commission requirements, such as payment of the applicable fees, qualification of personnel, providing proof of insurance and if applicable, final approval of a sketch, registration and safety inspection of tanker trucks. The commission shall ratify the permits at the first subsequent commission meeting after at least 20 days have elapsed after the permit has been administratively granted by the office of the director. Presence of applicant for the permit or his authorized representative is required at the commission meeting when the application for a permit is ratified. The applicant's supplier is prohibited from being the authorized representative. Only with special approval of the commission, under extenuating circumstances, shall the commission allow the applicant for a permit to be represented by another party other than a principal officer, director, manager, or attorney. The formal application form(s) shall be furnished by the commission upon request.

AUTHORITY NOTE: Promulgated in accordance with R.S. 3:1354. Effective August 15, 2010, Act 579 of the 2010 Regular Session repealed R.S. 3:1354 and enacted R.S. 40:1911 et seq., and particularly R.S. 40:1914 as authority for anhydrous ammonia regulations.

HISTORICAL NOTE: Adopted by the Department of Agriculture, Anhydrous Ammonia Commission (January 1967), amended by the Department of Public Safety and Corrections, Liquefied Petroleum Gas Commission, LR 19:898 (July 1993), LR 33:1143 (June 2007), effective July 1, 2007, LR 38:1272 (May 2012).

§1507. Requirements

A. Before any permit may be issued from the office of the director, all applicants shall have complied with the following.

1. Shall deposit filing fee of $100 for Class A1; $50 for Class A3; and $25 for all others. This fee shall accompany application.

2. Formal application for a permit shall be submitted to the office of the director.

3. Shall have on file in the office of the director proof of insurance, issued by a Louisiana licensed agent, in the minimum sum of $1,000,000, in the classes of insurance as required by the commission. This proof of insurance may be a copy of the policy with an endorsement that the insurance company will give at least 10 days notice to the commission before cancellation, or on a commission proprietary certificate of insurance, showing kinds and amount in force, with certificate bearing the clause that in the event the insurance company intends to cancel, the insurance company will notify the director of the commission 10 days prior to the date of cancellation, or a binder of insurance coverage, within date, will be acceptable as proof of insurance until the policy or proprietary certificate of insurance can be issued. The commission shall provide the proprietary certificate of insurance form on its public web site for downloading or will provide copies of the proprietary certificate of insurance form via facsimile or via U.S. mail upon request.

4. Where applicable, storage tank and location shall be approved. Storage tanks shall not be located inside corporate limits without written permission of the governing body.

a. All sketches or drawings of proposed bottle filling plants, liquid withdrawal systems and/or installations utilizing ASME containers shall be submitted to the office of the director and approved before system is put into operation.

5. Where applicable, the applicant shall provide adequate transport and/or delivery trucks satisfactory to the commission. Each transport and/or delivery truck shall be registered in accordance with commission rules and regulations, LAC 55:XI.1543.

6. Shall have paid permit fee in the amount of $300 to the commission of the state of Louisiana. For all succeeding years the permit fee shall be 1/2 of 1 percent of gross annual sales of anhydrous ammonia or $300, whichever is greater.

7. Persons in charge of operations shall furnish proof satisfactory to the commission and the office of director that they have had experience in and are familiar with and will abide by all safety precautions necessary in the conducting of the business for which they are granted a permit.

8. All service and installation personnel, anhydrous ammonia transfer personnel and tank truck drivers shall have a card of competency from the office of the director. All permit holders, except Class A-3X permit holders, shall have at least one card of competency issued to their permit. A card of competency will be issued to an applicant upon receipt of a $20 examination fee and successfully passing the competency test, providing the applicant holds some form of identification acceptable to the commission. The commission may accept as its own a reciprocal state's examination which contains substantially equivalent requirements. This shall be evidenced by a letter from the issuing authority or a copy of a valid card issued by the reciprocal state. All applicable fees shall be paid prior to issuing the card.

a. All cards of competency shall be renewed annually by the permit holder. There will be a charge of $10 per card for renewals. After expiration, there will be a penalty of $3 per card. There is a charge of $10 for replacing a lost card, change of employer, or change of company name. A card with an improper employer or company name shall not be valid.

b. All employees who are qualified by this commission and have been issued certificates of competency shall have their certificates of competency on their person while on duty. Should an employee lose his card, the dealer shall notify the office of the director within 10 days for the issuance of a new card. If an employee terminates his employment with the dealer for whom the card is issued, the card shall be picked up by the dealer and returned to the office of the director immediately.

9. Shall have necessary experience in anhydrous ammonia business or have employed a recognized operator of such experience and competency. The commission reserves the right to demand that such knowledge and competency be proved by a written examination.

10. Where applicable shall provide adequate switch track or tank loading and unloading facilities. All auxiliary equipment such as pumps, hose, electrical switches, etc., shall be, where possible, Underwriters Laboratory or any other nationally recognized testing agency approved for anhydrous ammonia. If equipment is not so approved, drawings and descriptions shall be submitted to the office of the director for his approval before installation.

11. Applicants for change of name shall deposit a filing fee of $25 with a formal application for a name change. The office of the director shall administratively grant the name change after all commission requirements are met. The commission shall ratify the name change at the next subsequent commission meeting after which a minimum of 20 days have elapsed since the administrative granting of the name change. A representative of the new firm or corporation is required to be present when the application is ratified by the commission. All certificates of competency shall be changed to new name.

12. Any permit holder who does not actively engage in business for which permit was granted, for a period of six consecutive calendar months, may have his permit revoked by the commission.

AUTHORITY NOTE: Promulgated in accordance with R.S. 3:1354. Effective August 15, 2010, Act 579 of the 2010 Regular Session repealed R.S. 3:1354 and enacted R.S. 40:1911 et seq., and particularly R.S. 40:1914 as authority for anhydrous ammonia regulations.

HISTORICAL NOTE: Adopted by the Department of Agriculture, Anhydrous Ammonia Commission (January 1967), amended by the Department of Public Safety and Corrections, Liquefied Petroleum Gas Commission, LR 19:898 (July 1993), LR 25:2413 (December 1999), amended LR 27:423 (March 2001), repromulgated LR 27:565 (April 2001), amended LR 33:1144 (June 2007), effective July 1, 2007, LR 38:1273 (May 2012), LR 41:396 (February 2015).

§1509. Compliance with Rules

A. Compliance with all other applicable rules and regulations is a mandatory requirement for all permit holders.

1. The commission may assess a civil penalty of not less than $100 nor more than $1000 for each violation of the rules and regulations adopted by the commission. Civil penalties may be assessed only by a ruling of the commission based on an adjudicatory hearing held in accordance with the Administrative Procedure Act. The commission may institute civil proceedings to enforce its ruling in the district court for the parish in which the commission is domiciled or the district court for the parish in which the violation occurred.

AUTHORITY NOTE: Promulgated in accordance with R.S. 3:1354. Effective August 15, 2010, Act 579 of the 2010 Regular Session repealed R.S. 3:1354 and enacted R.S. 40:1911 et seq., and particularly R.S. 40:1914 as authority for anhydrous ammonia regulations.

HISTORICAL NOTE: Adopted by the Department of Agriculture, Anhydrous Ammonia Commission (January 1967), amended by the Department of Public Safety and Corrections, Liquefied Petroleum Gas Commission, LR 19:899 (July 1993), LR 25:2413 (December 1999), LR 38:1274 (May 2012).

§1511. Re-Application

A. Any person, firm or corporation who has made application for a permit to enter the anhydrous ammonia business and whose request for permit has been denied, may re-submit an application 90 days after date of denial.

AUTHORITY NOTE: Promulgated in accordance with R.S. 3:1354. Effective August 15, 2010, Act 579 of the 2010 Regular Session repealed R.S. 3:1354 and enacted R.S. 40:1911 et seq., and particularly R.S. 40:1914 as authority for anhydrous ammonia regulations.

HISTORICAL NOTE: Adopted by the Department of Agriculture, Anhydrous Ammonia Commission (January 1967), amended by the Department of Public Safety and Corrections, Liquefied Petroleum Gas Commission, LR 19:899 (July 1993), LR 38:1274 (May 2012).

§1513. Classes of Permits

A. The commission shall issue upon application the following classes of permits.

1. Class A1. Holders of these permits may enter any phase of the anhydrous ammonia business.

a. Shall file formal application for a permit with the commission. These applications for permits shall be administratively granted by the office of the director, upon complying with all commission requirements, such as payment of the applicable fees, qualification of personnel, providing proof of insurance and if applicable, final approval of a sketch, registration and safety inspection of tanker trucks. The commission shall ratify the permits at the first subsequent commission meeting after at least 20 days have elapsed after the permit has been administratively granted by the office of the director. Presence of applicant for the permit or his authorized representative is required at the commission meeting when the application for a permit is

ratified. The applicant's supplier is prohibited from being the authorized representative. Only with special approval of the commission, under extenuating circumstances, will the commission allow the applicant for a permit to be represented by another party other than a principal officer, director, manager, or attorney. The formal application form(s) shall be furnished by the commission upon request.

b. Shall deposit filing fee of $100 with application.

c. Holders of these permits shall furnish evidence of general liability insurance in the minimum sum of $1,000,000 covering:

i. products;

ii. manufacturers and contractors; and

iii. automobile liability.

d. Storage tank and location shall be approved. Storage tanks shall not be located inside corporate limits without permission of the governing body.

e. Shall pay an initial permit fee for the first year of operation in the amount of $300 to the commission. For all succeeding years, the permit fee shall be one-half of 1 percent of the gross annual sales of anhydrous ammonia or $300, whichever is greater.

f. Person in charge of operations shall be satisfactory to the commission and the office of director.

g. All service and installation personnel, anhydrous ammonia transfer personnel, and tank truck drivers shall have a card of competency from the office of the director.

h. Shall have necessary experience in anhydrous ammonia business or have employed a recognized operator of such experience and competency. The commission reserves the right to demand that such knowledge and competency be proved by a written examination.

i. Shall provide adequate switch track of tank loading and unloading facilities. All auxiliary equipment such as pumps, hose, electrical switches, etc., shall be, where possible, Underwriters Laboratories or any other nationally recognized testing agency approved for anhydrous ammonia. If equipment is not so approved, drawings and descriptions shall be submitted to the office of the director for his approval before installation.

j. No truck shall be parked on a street or highway at night in any city, town or village, except that it be for the purpose of serving a customer, then only in an emergency.

k. Compliance with all other applicable rules and regulations is a mandatory requirement.

l. The name of the dealer or permit holder shall appear on all tank trucks, storage tank sites, and/or advertising being used by the dealer.

2. Class A2. Holders of these permits may install and service anhydrous ammonia containers, piping and appliances, but shall not deliver anhydrous ammonia.

a. Shall file formal application for a permit with the commission. These applications for permits shall be administratively granted by the office of the director, upon complying with all commission requirements, such as payment of the applicable fee, qualification of personnel, providing proof of insurance and if applicable, final approval of a sketch, registration and safety inspection of tanker trucks. The commission shall ratify the permits at the first subsequent commission meeting after at least 20 days have elapsed after the permit has been administratively granted by the office of the director. Presence of applicant for the permit or his authorized representative is required at the commission meeting when the application for a permit is ratified. In no case will the applicant’s supplier be the authorized representative. Only with special approval of the commission, under extenuating circumstances, will the commission allow the applicant for a permit other than a principal officer, director, manager, or attorney. The formal application form(s) shall be furnished by the commission upon request.

b. Shall deposit filing fee of $25 with application.

c. Holders of these permits shall furnish evidence of general liability insurance in the minimum sum of $1,000,000 covering products, manufacturers and contractors, and automobile liability.

d. Shall pay permit for first year's operations in the amount of $300 to the commission. For succeeding years the permit fee shall be $300.

e. Person in charge of operations shall be satisfactory to the commission and the office of the director.

f. All service and installation personnel shall have a certificate of competency from the office of the director.

g. Shall have necessary experience in anhydrous ammonia business or have employed a recognized operator of such experience and competency. The commission reserves the right to demand that such knowledge and competency be proved by a written examination.

h. Compliance with anhydrous ammonia law and all other applicable rules and regulations is a mandatory requirement.

3. Class A3. Holders of these permits may engage in the filling of approved cylinders with anhydrous ammonia on their premises, but shall not deliver anhydrous ammonia.

a. Shall file formal application for a permit with the commission. These applications for permits shall be administratively granted by the office of the director, upon complying with all commission requirements, such as payment of the applicable fees, qualification of personnel, providing proof of insurance and if applicable, final approval of a sketch, registration and safety inspection of tanker trucks. The commission shall ratify the permits at the first subsequent commission meeting after at least 20 days have elapsed after the permit has been administratively granted by the office of the director. Presence of applicant for the permit or his authorized representative is required at the

commission meeting when the application for a permit is ratified. The applicant's supplier is prohibited from being the authorized representative. Only with special approval of the commission, under extenuating circumstances, will the commission allow the applicant for a permit to be represented by another party other than a principal officer, director, manager, or attorney. The formal application form(s) shall be furnished by the commission upon request.

b. Shall deposit filing fee of $25 with application.

c. Holders of these permits shall furnish evidence of general liability insurance in the minimum sum of $1,000,000 covering products liability.

d. Storage tank and location shall be approved by the commission's authority having jurisdiction. All tanks located in corporate limits shall also be approved by the governing body.

e. Shall pay permit for first year's operations in the amount of $300 to the commission. For all succeeding years the permit fee shall be 1/2 of 1 percent of the gross annual sales of anhydrous ammonia or $300, whichever is greater.

f. Person in charge of operations shall be satisfactory to the commission and the office of the director.

g. All employees handling anhydrous ammonia shall have a certificate of competency from the office of the director.

h. Shall have necessary experience in anhydrous ammonia business or have employed a recognized operator of such experience and competency. The commission reserves the right to demand that such knowledge and competency be proved by a written examination.

i. Compliance with all other applicable rules and regulations is a mandatory requirement.

j. The dealer's name shall appear on all stationary storage tank sites.

4. Class A3-X. Holders of these permits may engage in the exchange of approved anhydrous ammonia cylinders on their premises, but shall not fill cylinders.

a. Shall file formal application for a permit with the commission. These applications for permits shall be administratively granted by the office of the director, upon complying with all commission requirements, such as payment of the applicable fees, qualification of personnel, providing proof of insurance and if applicable, final approval of a sketch, registration and safety inspection of tanker trucks. The commission shall ratify the permits at the first subsequent commission meeting after at least 20 days have elapsed after the permit has been administratively granted by the office of the director. Presence of applicant for the permit or his authorized representative is not required at the commission meeting when the application for a permit is ratified. The formal application form(s) shall be furnished by the commission upon request.

b. Shall deposit filing fee of $50 with application.

c. Holders of these permits shall furnish evidence of general liability insurance in the minimum sum of $1,000,000 covering products and automobile liability.

d. Shall pay permit for first year's operations in the amount of $300 to the commission. For all succeeding years, the permit fee shall be 1/2 of 1 percent of the gross annual sales of anhydrous ammonia or $300, whichever is greater.

e. Storage location shall be approved by the commission's authority having jurisdiction. All tanks located in corporate limits shall also be approved by the governing body.

f. Cylinder delivery trucks shall comply with CFR 49 of the DOT specifications.

g. Person in charge of operations shall be satisfactory to the commission and the office of the director.

h. All employees handling anhydrous ammonia shall have a certificate of competency from the office of the director.

i. Compliance with all other applicable rules and regulations is a mandatory requirement.

5. Class A4. Holders of these permits may transport anhydrous ammonia by motor vehicle over the highways of the state of Louisiana but shall not sell product in the state. This permit may be secured from the office of the director upon receipt of the following:

a. Shall file formal application for a permit with the commission. These applications for permits shall be administratively granted by the office of the director, upon complying with all commission requirements, such as payment of the applicable fees, qualification of personnel, providing proof of insurance and if applicable, final approval of a sketch, registration and safety inspection of tanker trucks. The commission shall ratify the permits at the first subsequent commission meeting after at least 20 days have elapsed after the permit has been administratively granted by the office of the director. Presence of applicant for the permit or his authorized representative is required at the commission meeting when the application for a permit is ratified. The applicant's supplier is prohibited from also being the authorized representative. Only with special approval of the commission, under extenuating circumstances, will the commission allow the applicant for a permit to be represented by another party other than a principal officer, director, manager, or attorney. The formal application form(s) shall be furnished by the commission upon request.

b. Shall deposit filing fee of $25 with application.

c. Shall pay permit fee for first year's operations in the amount of $300 to the commission of the state of Louisiana. For all succeeding years the permit fee shall be $300.

d. Holders of these permits shall furnish evidence of general liability insurance in the minimum sum of $1,000,000 automobile liability.

e. All trucks traveling in Louisiana shall conform to CFR 49 of the DOT specifications.

f. All transport trucks are subject to inspection and approval of the commission.

g. No truck shall be parked on a street or highway at night in any city, town, or village, except that it be for the purpose of serving a customer and this only in an emergency.

h. All transport and tank truck drivers shall have a certificate of competency from the office of the director.

i. Compliance with all other applicable rules and regulations is a mandatory requirement.

j. The dealer's name shall appear on all tank trucks which require registration with the commission.

AUTHORITY NOTE: Promulgated in accordance with R.S. 3:1354. Effective August 15, 2010, Act 579 of the 2010 Regular Session repealed R.S. 3:1354 and enacted R.S. 40:1911 et seq., and particularly R.S. 40:1914 as authority for anhydrous ammonia regulations.

HISTORICAL NOTE: Adopted by the Department of Agriculture, Anhydrous Ammonia Commission (January 1967), amended by the Department of Public Safety and Corrections, Liquefied Petroleum Gas Commission, LR 19:899 (July 1993), LR 25:2413 (December 1999), amended LR 27:423 (March 2001), repromulgated LR 27:565 (April 2001), LR 33:1144 (June 2007), effective July 1, 2007, LR 38:1274 (May 2012), LR 46:189 (February 2020).

Subchapter B. Dealers

§1515. Compliance with Rules and Act

A. Dealers shall comply with R.S. 3:1355 and the rules and regulations of the commission in order to obtain a permit and to avoid cancellation of said permit.

AUTHORITY NOTE: Promulgated in accordance with R.S. 3:1354. Effective August 15, 2010, Act 579 of the 2010 Regular Session repealed R.S. 3:1354 and enacted R.S. 40:1911 et seq., and particularly R.S. 40:1914 as authority for anhydrous ammonia regulations.

HISTORICAL NOTE: Adopted by the Department of Agriculture, Anhydrous Ammonia Commission (January 1967), amended by the Department of Public Safety and Corrections, Liquefied Petroleum Gas Commission, LR 19:901 (July 1993), LR 38:1276 (May 2012).

§1517. Fine

A. After 15 days notice to appear before the commission for purposes of a trial and said trial is held, the commission may impose a fine in lieu of cancellation of permit.

AUTHORITY NOTE: Promulgated in accordance with R.S. 3:1354. Effective August 15, 2010, Act 579 of the 2010 Regular Session repealed R.S. 3:1354 and enacted R.S. 40:1911 et seq., and particularly R.S. 40:1914 as authority for anhydrous ammonia regulations.

HISTORICAL NOTE: Adopted by the Department of Agriculture, Anhydrous Ammonia Commission (January 1967), amended by the Department of Public Safety and Corrections, Liquefied Petroleum Gas Commission, LR 19:902 (July 1993). LR 38:1276 (May 2012).

§1519. Expiration of Permit

A. All permits or registrations shall expire at midnight on the date of their expiration.

B. All permits or registrations renewed after their expiration date shall have an administrative penalty of 5 percent of the permit or registration fee due added for each month or fraction thereof, not to exceed 25 percent of the amount of the permit or registration fee due.

C. All permits or registrations renewed after their expiration date shall have administrative interest of 1 percent of the permit or registration fee due added for each month or fraction thereof to the amount of the permit or registration fee due.

D. After the expiration of a permit or registration fee renewal date, by five days, any dealer continuing in operation without the payment of the fee, any administrative penalty, and any administrative interest due, shall be considered as operating in violation of R.S. 3:1356(A) and the rules and regulations of the commission. The commission may assess a civil penalty in accordance with R.S. 3:1357 or may suspend, cancel or revoke said permit or registration.

AUTHORITY NOTE: Promulgated in accordance with R.S. 3:1354. Effective August 15, 2010, Act 579 of the 2010 Regular Session repealed R.S. 3:1354 and enacted R.S. 40:1911 et seq., and particularly R.S. 40:1914 as authority for anhydrous ammonia regulations.

HISTORICAL NOTE: Adopted by the Department of Agriculture, Anhydrous Ammonia Commission (January 1967), amended by the Department of Public Safety and Corrections, Liquefied Petroleum Gas Commission, LR 19:902 (July 1993), LR 27:423 (March 2001), LR 38:1276 (May 2012).

§1521. Qualified Personnel

A. All service and installation personnel, anhydrous ammonia transfer personnel, and tank truck drivers shall have a card of competency from the office of the director. Where new persons are employed, they shall not be placed in charge of making installations, servicing equipment, or delivering anhydrous ammonia until they have passed the examination given by the director and a card showing their competency has been issued to them.

AUTHORITY NOTE: Promulgated in accordance with R.S. 3:1354. Effective August 15, 2010, Act 579 of the 2010 Regular Session repealed R.S. 3:1354 and enacted R.S. 40:1911 et seq., and particularly R.S. 40:1914 as authority for anhydrous ammonia regulations.

HISTORICAL NOTE: Adopted by the Department of Agriculture, Anhydrous Ammonia Commission (January 1967), amended by the Department of Public Safety and Corrections, Liquefied Petroleum Gas Commission, LR 19:902 (July 1993), LR 38:1276 (May 2012).

§1523. Report Accidents

A. Any accident involving anhydrous ammonia or the transportation of anhydrous ammonia which causes injury to employees, property damage, injury to other persons, a fire or an accidental release of anhydrous ammonia that is reportable under the Louisiana Right-To-Know Law shall be

reported by that dealer in writing to the office of the director as soon as possible but not later than 48 hours. The office of the director shall accept, in lieu of the required report in writing, data and information from the information system established under the Hazardous Materials Information Development, Preparedness and Response Act.

AUTHORITY NOTE: Promulgated in accordance with R.S. 3:1354. Effective August 15, 2010, Act 579 of the 2010 Regular Session repealed R.S. 3:1354 and enacted R.S. 40:1911 et seq., and particularly R.S. 40:1914 as authority for anhydrous ammonia regulations.

HISTORICAL NOTE: Adopted by the Department of Agriculture, Anhydrous Ammonia Commission (January 1967), amended by the Department of Public Safety and Corrections, Liquefied Petroleum Gas Commission, LR 19:902 (July 1993), LR 25:2414 (December 1999), LR 38:1277 (May 2012).

§1525. Insurance

A. Insurance requirements for an individual firm or corporation having a permit shall be the same as required of a new dealer.

AUTHORITY NOTE: Promulgated in accordance with R.S. 3:1354. Effective August 15, 2010, Act 579 of the 2010 Regular Session repealed R.S. 3:1354 and enacted R.S. 40:1911 et seq., and particularly R.S. 40:1914 as authority for anhydrous ammonia regulations.

HISTORICAL NOTE: Adopted by the Department of Agriculture, Anhydrous Ammonia Commission (January 1967), amended by the Department of Public Safety and Corrections, Liquefied Petroleum Gas Commission, LR 19:902 (July 1993), LR 38:1277 (May 2012).

§1527. Compliance with Rules

A. Compliance with all other applicable rules and regulations is a mandatory requirement for all permit holders.

AUTHORITY NOTE: Promulgated in accordance with R.S. 3:1354. Effective August 15, 2010, Act 579 of the 2010 Regular Session repealed R.S. 3:1354 and enacted R.S. 40:1911 et seq., and particularly R.S. 40:1914 as authority for anhydrous ammonia regulations.

HISTORICAL NOTE: Adopted by the Department of Agriculture, Anhydrous Ammonia Commission (January 1967), amended by the Department of Public Safety and Corrections, Liquefied Petroleum Gas Commission, LR 19:902 (July 1993), LR 38:1277 (May 2012).

§1529. Condemnation of Tanks

A. Any anhydrous ammonia storage container corroded, pitted or worn to 20 percent of the thickness of the head, shell plate, or stand pipe shall be condemned for further storage of anhydrous ammonia, provided the shell thickness is not less than 3/16 inch.

AUTHORITY NOTE: Promulgated in accordance with R.S. 3:1354. Effective August 15, 2010, Act 579 of the 2010 Regular Session repealed R.S. 3:1354 and enacted R.S. 40:1911 et seq., and particularly R.S. 40:1914 as authority for anhydrous ammonia regulations.

HISTORICAL NOTE: Adopted by the Department of Agriculture, Anhydrous Ammonia Commission (January 1967), amended by the Department of Public Safety and Corrections, Liquefied Petroleum Gas Commission, LR 19:902 (July 1993), LR 38:1277 (May 2012).

§1531. Improper Installation

A. A dealer shall not serve any anhydrous ammonia system which the dealer knows is not installed pursuant to the commission regulations or is in a dangerous condition. All new installations or reinstallations shall be checked by the dealer for tightness of lines, poor workmanship, use of unapproved pipe or equipment or use of poor piping design. All improper installations shall be corrected before the dealer services such installation or reinstallation with anhydrous ammonia for the first time. Any subsequent servicing dealer shall not be responsible for unauthorized changes in or failures of an existing system or connected equipment.

1. Anyone violating this Section shall also be liable for all damages resulting from an accident or explosion involving that shipment. The liability imposed by this Section shall not be delegated by contract or practice to any transporter or subcontractor responsible for the transportation of anhydrous ammonia.

2. A permit may be suspended or revoked by the commission whenever the commission has assessed two or more penalties against a dealer for willful violation of or failure to comply with such rules and regulations provided the second or succeeding penalty or penalties have been imposed for violations of or failure to comply with the regulations of the commission committed after the imposition of the first penalty or forfeiture, reserving to the dealer the right to resort to the courts for reinstatement of the permit suspended or revoked. The commission may suspend or revoke the permit of any person who violates the provisions of R.S. 3:1355 or who fails to pay any civil penalty imposed by the commission under the provisions of R.S. 3:1357 within 30 days after the assessment becomes final. Any dealer who continues to operate after such permit is revoked or during the period of such suspension shall be liable to prosecution under the provisions hereof in the same manner as if no such permit had ever been issued. A permit may be revoked or suspended only by a ruling of the commission based on adjudicatory hearing held in accordance with the Administrative Procedure Act. The commission may institute civil proceedings to enforce its rulings in the district court for the parish in which the commission is domiciled or in the district court for the parish in which the violation occurred.

3. No dealer shall service an anhydrous ammonia system, tank or another dealer after having received notification by the commission that the system, tank or dealer is not in compliance with these rules and regulations. An AD letter posted on the commission's public website which states that a system, tank or dealer is not in compliance shall constitute notification.

AUTHORITY NOTE: Promulgated in accordance with R.S. 3:1354. Effective August 15, 2010, Act 579 of the 2010 Regular Session repealed R.S. 3:1354 and enacted R.S. 40:1911 et seq., and particularly R.S. 40:1914 as authority for anhydrous ammonia regulations.

HISTORICAL NOTE: Adopted by the Department of Agriculture, Anhydrous Ammonia Commission (January 1967), amended by the Department of Public Safety and Corrections, Liquefied Petroleum Gas Commission, LR 19:902 (July 1993), LR 27:423 (March 2001), LR 38:1277 (May 2012).

§1533. Customer Notification

A. Each dealer shall transmit a notice once each year to each customer stating that anhydrous ammonia systems are potentially dangerous, that a leak in the system could result in an injury and that systems should be inspected periodically.

AUTHORITY NOTE: Promulgated in accordance with R.S. 3:1354. Effective August 15, 2010, Act 579 of the 2010 Regular Session repealed R.S. 3:1354 and enacted R.S. 40:1911 et seq., and particularly R.S. 40:1914 as authority for anhydrous ammonia regulations.

HISTORICAL NOTE: Adopted by the Department of Agriculture, Anhydrous Ammonia Commission (January 1967), amended by the Department of Public Safety and Corrections, Liquefied Petroleum Gas Commission, LR 19:903 (July 1993), LR 38:1278 (May 2012).

§1535. Inspections

A. Each dealer facility subject to the regulations of the commission shall submit to an inspection by a representative of the commission, which inspections may be conducted without prior notice by the commission or its representative.

AUTHORITY NOTE: Promulgated in accordance with R.S. 3:1354. Effective August 15, 2010, Act 579 of the 2010 Regular Session repealed R.S. 3:1354 and enacted R.S. 40:1911 et seq., and particularly R.S. 40:1914 as authority for anhydrous ammonia regulations.

HISTORICAL NOTE: Adopted by the Department of Agriculture, Anhydrous Ammonia Commission (January 1967), amended by the Department of Public Safety and Corrections, Liquefied Petroleum Gas Commission, LR 19:903 (July 1993), LR 38:1278 (May 2012).

§1537. Dealer Permit Requirements

A. Permits required under these general requirements shall not be transferred. All dealers, regardless of operation, shall hold a permit and shall not operate under a permit of another dealer.

AUTHORITY NOTE: Promulgated in accordance with R.S. 3:1354. Effective August 15, 2010, Act 579 of the 2010 Regular Session repealed R.S. 3:1354 and enacted R.S. 40:1911 et seq., and particularly R.S. 40:1914 as authority for anhydrous ammonia regulations.

HISTORICAL NOTE: Adopted by the Department of Agriculture, Anhydrous Ammonia Commission (January 1967), amended by the Department of Public Safety and Corrections, Liquefied Petroleum Gas Commission, LR 19:903 (July 1993), LR 38:1278 (May 2012).

§1539. Testing of Tanks

A. The director of commission reserves the right to require an internal hydrostatic pressure test on bulk storage or nurse tanks.

AUTHORITY NOTE: Promulgated in accordance with R.S. 3:1354. Effective August 15, 2010, Act 579 of the 2010 Regular Session repealed R.S. 3:1354 and enacted R.S. 40:1911 et seq., and particularly R.S. 40:1914 as authority for anhydrous ammonia regulations.

HISTORICAL NOTE: Adopted by the Department of Agriculture, Anhydrous Ammonia Commission (January 1967), amended by the Department of Public Safety and Corrections, Liquefied Petroleum Gas Commission, LR 19:903 (July 1993), LR 38:1278 (May 2012).

§1541. Sketches

A. A copy of all anhydrous ammonia installation plans and specifications including plot plans shall be submitted to the office of the director for approval prior to the commencement of work on the installation.

B. Such plans shall show the following:

1. the distance of container from line of adjoining property, highways, main line of railroads, places of public assembly, institutional occupancy (such as hospitals, nursing homes, schools) and dug wells;

2. size and location of tank;

3. the size and location of all pipe and the length of all runs;

4. all other details as related to the proposed installation as required.

AUTHORITY NOTE: Promulgated in accordance with R.S. 3:1354. Effective August 15, 2010, Act 579 of the 2010 Regular Session repealed R.S. 3:1354 and enacted R.S. 40:1911 et seq., and particularly R.S. 40:1914 as authority for anhydrous ammonia regulations.

HISTORICAL NOTE: Adopted by the Department of Agriculture, Anhydrous Ammonia Commission (January 1967), amended by the Department of Public Safety and Corrections, Liquefied Petroleum Gas Commission, LR 19:903 (July 1993), LR 38:1278 (May 2012).

§1543. Transport/Delivery Truck Cargo Compliance

A. Registration. Dealers that operate transport and/or delivery trucks in the state of Louisiana shall register each unit with the commission annually, the annual registration fee is $50 for each unit registered. The annual registration period and procedure will be established by the Office of the Director of the commission. Any transport and/or delivery truck operating over the highways of the state of Louisiana with no registration decal or an expired registration decal affixed to the unit will be considered in violation of commission regulations and subject to penalties, this includes any unit operating beyond the established registration period without a current decal affixed to the unit. It is unlawful to load or unload any cargo unit not meeting commission regulations.

B. Safety Inspections. It is incumbent upon dealers and drivers to insure that all transport and/or delivery trucks being operated over the highways of Louisiana meet all federal and state regulations. The commission reserves the right to inspect any transport and/or delivery truck being registered at any time. Inspections may be performed by commission inspectors or a qualified agency acceptable to the commission. Dealer safety inspections performed by a commission inspector outside the State of Louisiana shall be

solely at the discretion and procedures established by the Office of the Director.

AUTHORITY NOTE: Promulgated in accordance with R.S. 3:1354. Effective August 15, 2010, Act 579 of the 2010 Regular Session repealed R.S. 3:1354 and enacted R.S. 40:1911 et seq., and particularly R.S. 40:1914 as authority for anhydrous ammonia regulations.

HISTORICAL NOTE: Adopted by the Department of Agriculture, Anhydrous Ammonia Commission (January 1967), amended by the Department of Public Safety and Corrections, Liquefied Petroleum Gas Commission, LR 19:903 (July 1993), LR 25:2414 (December 1999), LR 38:1278 (May 2012), LR 41:397 (February 2015).

Subchapter C. Forms and Reports

§1545. Installation Report

A. An installation report form shall be used for all installations and reinstallations of DOT and ASME containers and shall be retained in dealer's file.

AUTHORITY NOTE: Promulgated in accordance with R.S. 3:1354. Effective August 15, 2010, Act 579 of the 2010 Regular Session repealed R.S. 3:1354 and enacted R.S. 40:1911 et seq., and particularly R.S. 40:1914 as authority for anhydrous ammonia regulations.

HISTORICAL NOTE: Adopted by the Department of Agriculture, Anhydrous Ammonia Commission (January 1967), amended by the Department of Public Safety and Corrections, Liquefied Petroleum Gas Commission, LR 19:903 (July 1993), LR 38:1279 (May 2012).

Subchapter D. Adoption of Standard

§1547. National Standard

A. The commission hereby adopts the American National Standards Institute, Safety Requirements for the Storage and Handling of Anhydrous Ammonia, CGA-G-2.1, ANSI K61.1 of 1989 except for Section 8 regarding systems mounted on railcar structures.

B. The commission may adopt subsequent editions of these standards by a rule change in accordance with the Administrative Procedure Act.

C. Any published rules and regulations shall take precedence over the standard referenced in Subsection A.

D. The commission reserves the right to make exceptions to any rule adopted in §1547.A as it applies to local conditions as it may deem necessary in the interest of public safety.

AUTHORITY NOTE: Promulgated in accordance with R.S. 3:1354. Effective August 15, 2010, Act 579 of the 2010 Regular Session repealed R.S. 3:1354 and enacted R.S. 40:1911 et seq., and particularly R.S. 40:1914 as authority for anhydrous ammonia regulations.

HISTORICAL NOTE: Adopted by the Department of Agriculture, Anhydrous Ammonia Commission (January 1967), amended by the Department of Public Safety and Corrections, Liquefied Petroleum Gas Commission, LR 19:903 (July 1993), LR 29:2511 (November 2003), LR 38:1279 (May 2012).

Title 55
PUBLIC SAFETY
Part XI. Management and Finance

Chapter 1. Fees

§101. Initial and Contract Requests

A. All initial inquiries will be directed to the director of information services within the office of management and finance. Rates may be updated each fiscal year or as legislative statutes change. For one-time requests, a minimum deposit of 75 percent of the estimated cost is required before any work shall commence. For contractual agreements which require multiple updates over a period of time, the customer must provide a bond, a certified check or other negotiable instrument made payable to the Department of Public Safety (such as a "CD") equivalent to three billing cycles of the estimated cost.

AUTHORITY NOTE: Promulgated in accordance with R.S. 32:853B(1), 32:727E, 32:393.1C.

HISTORICAL NOTE: Promulgated by the Department of Public Safety and Corrections, Office of Management and Finance, LR 19:779 (June 1993).

§103. Automated Copy Fees

A. Pricing policy for motor vehicle data extracted on a daily basis under contractual agreement which includes title, registration, renewal and other non-specific data is $25 per thousand records.

B. The pricing policy for drivers license, motor vehicle and alcoholic beverage control master records utilizing standard utility programs available for one-time extracts is as follows:

1. state, parish and municipal governments requesting less than 25,000 records:

a.	5,000 or less records	$100;
b.	10,000 or less records	$200;
c.	15,000 or less records	$300;
d.	20,000 or less records	$400;
e.	25,000 or less records	$500.

2. state, parish and municipal governments requesting greater than 25,000 records:

a.	basic processing fee	$500;
b.	first 50,000 records	$ 0.01 each;
c.	next 100,000 records	$ 0.005 each;
d.	next 850,000 records	$ 0.0025 each;
e.	all additional records	$ 0.00125 each.

3. all nongovernmental bodies:

a.	basic processing fee	$500;
b.	first 50,000 records	$ 0.03 each;
c.	next 100,000 records	$ 0.02 each;
d.	next 850,000 records	$ 0.01 each;
e.	all additional records	$ 0.005 each.

4. cost of supplies (paper, postage, etc.)—actual cost.

C. Pricing policy for online driver history data is $6 per history record as per statute. Pricing policy for online master records (all types) is $2 per transaction.

D. Pricing policy for contractual agreements which require multiple updates over a period of time is as follows:

1. cost of programmer/analyst work is $50 per hour;

2. setup cost for data control and operations, as applicable is $30 per hour;

3. flat rate charge of $0.03 per record;

4. cost of supplies.

E. Pricing policy for customized one time request is as follows:

1. cost of programmer/analyst work is $50 per hour;

2. cost of data control and operations is $30 per hour;

3. record pricing policy reflected in Subsection A;

4. cost of supplies.

F. Pricing policy for online access or continually updated reports that does not currently exist will be developed and provided by written estimate upon a written request from a customer.

G. Pricing policy for continually updated in-house reports requested by non-governmental bodies is $100 for the first report and $25 for each additional report per update or per week. There is an additional $.03 per record charge.

H. Pricing policy for continually updated in-house reports requested by governmental bodies is $100 for the first report and $25 for each additional report per update or per request.

I. Pricing policy for copies of other preprinted in-house statistical reports is $1 per page plus postage for current information. Copies of noncurrent reports (past years) are $25 each.

J. Pricing policy for batch access of drivers license and motor vehicle records extracted specifically for address verification or similar purposes where specific input data is

required is $1,000 per run plus $0.03 per record with a maximum of 15,000 records per run.

K. Copies of an individual's own public record requested by an indigent citizen of Louisiana shall be furnished free of charge. All other individual requests will be furnished as per state statute.

AUTHORITY NOTE: Promulgated in accordance with R.S. 32:853B(1), 32:727E, 32:393.1C.

HISTORICAL NOTE: Promulgated by the Department of Public Safety and Corrections, Office of Management and Finance, LR 19:779 (June 1993).

Chapter 3. Drug Testing Policy

§301. Introduction and Purpose

A. The employees of Public Safety Services are among the state's most valuable resources, and the physical and mental well-being of our employees is necessary for them to properly carry out their responsibilities. Substance abuse causes serious adverse consequences to users, affecting their productivity, health and safety, dependents, and co-workers, as well as the general public.

B. The state of Louisiana and Public Safety Services have a long-standing commitment to working toward a drug-free workplace. In order to curb the use of illegal drugs by employees of the state of Louisiana, the Louisiana Legislature enacted laws which provide for the creation and implementation of drug testing programs for state employees. Further, the governor of the state of Louisiana issued Executive Order MJF 98-38 providing for the promulgation by executive agencies of written policies mandating drug testing of employees, appointees, prospective employees and prospective appointees, pursuant to Louisiana Revised Statute 49:1001, et seq.

AUTHORITY NOTE: Promulgated in accordance with R.S. 49:1001 et seq.

HISTORICAL NOTE: Promulgated by the Department of Public Safety and Corrections, Office of Management and Finance, LR 25:2419 (December 1999).

§303. Applicability

A. Public Safety Services fully supports these efforts and is committed to a drug-free workplace. This policy shall apply to all employees of Public Safety Services including appointees and all other persons having an employment relationship with this agency.

AUTHORITY NOTE: Promulgated in accordance with R.S. 49:1001 et seq.

HISTORICAL NOTE: Promulgated by the Department of Public Safety and Corrections, Office of Management and Finance, LR 25:2419 (December 1999).

§305. Definitions

Controlled Substances—a drug, chemical substance or immediate precursor in Schedules I through V of R.S. 40:964 or Section 202 of the Controlled Substances Act (21 U.S.C. 812).

Designer (Synthetic) Drugs—those chemical substances that are made in clandestine laboratories where the molecular structure of both legal and illegal drugs is altered to create a drug that is not explicitly banned by federal law.

Employee—unclassified, classified, and student employees, student interns, and any other person having an employment relationship with this agency, regardless of the appointment type (e.g., full-time, part-time, temporary, restricted, detail, job appointment, etc.).

Illegal Drug—any drug which is not legally obtainable or which has not been legally obtained, to include prescribed drugs not legally obtained and prescribed drugs not being used for prescribed purposes or being used by one other than the person for whom prescribed.

Reasonable Suspicion—belief based upon reliable, objective and articulable facts derived from direct observation of specific physical, behavioral, odorous presence, or performance indicators and being of sufficient import and quantity to lead a prudent person to suspect that an employee is in violation of this policy.

Safety-Sensitive or Security-Sensitive Position—a position determined to contain duties of such nature that the compelling State interest to keep the incumbent drug-free outweighs the employee's privacy interests. At varying degrees, all Public Safety Services employees, regardless of rank or classification, have access to records that directly or indirectly affect the safety and security of residents of the state of Louisiana (i.e., Criminal Records, Drivers License Records, etc.). For this reason, all positions of Public Safety Services are considered to be "safety-sensitive" or "security-sensitive".

Under the Influence (for the purposes of this policy)—a drug, chemical substance, or the combination of a drug and/or chemical substance that affects an employee in any detectable manner. The symptoms of influence are not confined to that consistent with misbehavior, nor to obvious impairment of physical or mental ability, such as slurred speech, or difficulty in maintaining balance. A determination of influence can be established by a professional opinion or a scientifically valid test.

Workplace—any location on agency property including all property, offices, and facilities (including all vehicles and equipment) whether owned, leased, or otherwise used by the agency or by an employee on behalf of the agency in the conduct of its business in addition to any location from which an individual conducts agency business while such business is being conducted.

AUTHORITY NOTE: Promulgated in accordance with R.S. 49:1001 et seq.

HISTORICAL NOTE: Promulgated by the Department of Public Safety and Corrections, Office of Management and Finance, LR 25:2419 (December 1999).

§307. Policy

A. It shall be the policy of Public Safety Services to maintain a drug-free workplace and workforce free of substance abuse. Employees are prohibited from reporting to work or performing work for Public Safety Services with the presence in their bodies of illegal drugs, controlled

substances, or designer (synthetic) drugs at or above the initial testing levels and confirmatory testing levels as established in the contract between the state of Louisiana and the official provider of drug testing services. Employees are further prohibited from the illegal use, possession, dispensation, distribution, manufacture, or sale of controlled substances, designer (synthetic) drugs, and illegal drugs, at the work site and while on official state business, on duty or on call for duty.

B. To assure maintenance of a drug-free workplace, it shall be the policy of Public Safety Services to implement a program of drug testing, in accordance with Executive Order No. MJF 98-38, R.S. 49:1001 et seq., and all other applicable federal and state laws, as set forth below.

AUTHORITY NOTE: Promulgated in accordance with R.S. 49:1001 et seq.

HISTORICAL NOTE: Promulgated by the Department of Public Safety and Corrections, Office of Management and Finance, LR 25:2419 (December 1999).

§309. Conditions Requiring Drug Tests

A. Reasonable Suspicion. Any employee shall be required to submit to a drug test if there is reasonable suspicion (as defined in this policy) that the employee is using drugs.

1. Post Accident. Each employee involved in an accident that occurs during the course and scope of employment shall be required to submit to a drug test if the accident:

a. involves circumstances leading to a reasonable suspicion of the employee's drug use; or

b. results in a fatality.

2. Rehabilitation Monitoring. Any employee who is participating in a substance abuse after-treatment program or who has a rehabilitation agreement with the agency following an incident involving substance abuse shall be required to submit to random drug testing.

3. Pre-Employment. Each prospective employee shall be required to submit to drug screening at the time and place designated by the human resource director following a job offer contingent upon a negative drug-testing result. Pursuant to R.S. 49:1008, a prospective employee who tests positive for the presence of drugs in the initial screening shall be eliminated from consideration of employment.

4. Safety-Sensitive or Security-Sensitive Positions—Random Testing. As every Public Safety Services position is considered to be "safety-sensitive" or "security-sensitive", every employee shall be required to submit to drug testing as required by the Appointing Authority, who shall periodically (quarterly) call for a sample of such employees, selected at random by a computer generated random selection process, and require them to report for testing. All such testing shall, if applicable, occur during the selected employee's work schedule.

AUTHORITY NOTE: Promulgated in accordance with R.S. 49:1001 et seq.

HISTORICAL NOTE: Promulgated by the Department of Public Safety and Corrections, Office of Management and Finance, LR 25:2420 (December 1999).

§311. Procedure

A. Drug testing pursuant to this policy shall be conducted for the presence of cannabinoids (marijuana metabolites), cocaine metabolites, opiate metabolites, phencyclidine, and amphetamines in accordance with the provisions of R.S. 49:1001 et seq. Public Safety Services reserves the right to test its employees for the presence of any other illegal drug or controlled substance when there is reasonable suspicion to do so.

B. The human resource director and the deputy undersecretary shall be involved in any determination that one of the above-named conditions requiring drug testing exists. All recommendations for drug testing must be approved by Public Safety Services. Upon such final determination by the responsible officials, the human resource director shall notify the supervisor of the employee to be tested, who shall immediately notify the employee where and when to report for the testing.

C. Testing services shall be performed by a provider chosen by the Office of State Purchasing, Division of Administration, pursuant to applicable bid laws. At a minimum, the testing service shall assure the following.

1. All specimen collections will be performed in accordance with applicable federal and state regulations and guidelines to ensure the integrity of the specimen and the privacy of the donor. The human resource director shall review and concur in advance with any decision by a collection site person to obtain a specimen under direct supervision. All direct observation shall be conducted by a same gender collection site person.

2. Chain of custody forms must be provided to ensure the integrity of each urine specimen by tracking its handling and storage from point of collection to final disposition.

3. A Substance Abuse and Mental Health Services Administration (SAMSHA)—certified laboratory shall perform testing.

4. The laboratory shall use a cut-off of 50 ng/ml for a positive finding in testing for cannabinoids.

5. All positives reported by the laboratory must be confirmed by Gas Chromatography/Mass Spectrometry.

D. All positive results of a drug-testing shall be reported by the laboratory to a qualified medical review officer.

AUTHORITY NOTE: Promulgated in accordance with R.S. 49:1001 et seq.

HISTORICAL NOTE: Promulgated by the Department of Public Safety and Corrections, Office of Management and Finance, LR 25:2420 (December 1999).

§313. Confidentiality

A. All information, interviews, reports, statements, memoranda, and/or test results received by Public Safety

Services through its drug testing program are confidential communications, pursuant to R.S. 49:1012, and may not be used or received in evidence, obtained to discovery, or disclosed in any public or private proceedings, except in an administrative or disciplinary proceeding or hearing, or civil litigation where drug use by the tested individual is relevant.

AUTHORITY NOTE: Promulgated in accordance with R.S. 49:1001 et seq.

HISTORICAL NOTE: Promulgated by the Department of Public Safety and Corrections, Office of Management and Finance, LR 25:2420 (December 1999).

§315. Responsibility

A. The Deputy Secretary of Public Safety Services is responsible for the overall compliance with this policy and shall submit to the Office of the Governor, through the Commissioner of Administration, a report on this policy and drug testing program, describing progress, the number of employees affected, the categories of testing being conducted, the associated costs for testing, and the effectiveness of the program by November 1 of each year.

B. The human resource director is responsible for administering the drug testing program; recommending to the deputy secretary when drug testing is appropriate; receiving, acting on, and holding confidential all information received from the testing services provider and from the medical review officer; collecting appropriate information necessary to agency defense in the event of legal challenge; and providing the deputy secretary with the data necessary to submit a detail report to the Office of the Governor as described above.

C. All supervisory personnel are responsible for reporting to the human resource director any employee they suspect may be under the influence of any illegal drug and/or chemical substance. Supervisory personnel are also responsible for assuring that each employee under their supervision receives a copy of this policy, signs a receipt form, and understands or is given the opportunity to understand and have questions answered about its contents.

AUTHORITY NOTE: Promulgated in accordance with R.S. 49:1001 et seq.

HISTORICAL NOTE: Promulgated by the Department of Public Safety and Corrections, Office of Management and Finance, LR 25:2420 (December 1999).

§317. Violation of the Policy

A. Violation of this policy, including refusal to submit to drug testing when properly ordered to do so, will result in actions up to and including termination of employment. Each violation and alleged violation of this policy will be handled on an individual basis, taking into account all data, including the risk to self, fellow employees, and the general public.

AUTHORITY NOTE: Promulgated in accordance with R.S. 49:1001 et seq.

HISTORICAL NOTE: Promulgated by the Department of Public Safety and Corrections, Office of Management and Finance, LR 25:2421 (December 1999).

Chapter 5. Rulemaking Petitions

§501. Submission of a Rulemaking Petition

A. In accordance with R.S. 49:953(C)(1), any interested person may petition an agency to adopt a new rule, or to amend or repeal an existing rule.

B. To petition the Office of Management and Finance for the adoption, amending or repeal of any rule, an interested person shall submit in writing the Department of Public Safety's petition for rulemaking form to Department of Public Safety, Office of Management and Finance at 7919 Independence Boulevard, Baton Rouge, LA 70806, Attn: Rulemaking Petition, which contains the following basic information organized and captioned:

1. the petitioner's name and address;

2. the specific rulemaking agency to be petitioned within the Department of Public Safety as listed on the form;

3. a brief description of the facts or justification supporting the petitioner's request for the adoption of a rule or the amending of a rule that has already been adopted;

4. suggested specific language or language setting forth the substance of the proposed rule or rule change that is being requested, which may be attached to, or in addition to, the petition for rulemaking form;

5. a copy of each and every document upon which the petitioner bases the petitioner's request for a rule or a citation of the information and where it can be easily obtained for review by the rulemaking agency;

6. the petitioner's signature and date of signature.

C. The Department of Public Safety's petition for rulemaking form can be found on the official website of the Department of Public Safety, Office of Management and Finance.

AUTHORITY NOTE: Promulgated in accordance with Act 454 of the 2018 Regular Legislative Session and R.S. 49:953, et seq.

HISTORICAL NOTE: Promulgated by the Department of Public Safety and Corrections, Office of Management and Finance LR 46:701 (May 2020).

§503. Consideration of a Rulemaking Petition

A. Upon receipt of a petition for rulemaking form, the chief administrative officer shall forward the petition to his agency designee. The agency designee shall review the petition for completeness pursuant to the requirements listed in LAC 55:XI.501.B. If the petition is found to be complete, the agency designee shall consider the petition.

B. Within 90 days of receipt of the petition, the chief administrative officer or his agency designee shall either:

1. initiate rulemaking procedures to adopt a new rule, or to amend an existing rule; or

2. notify the petitioner in writing of the denial to proceed with rulemaking, stating the reason(s) therefore.

C. Whenever the chief administrative officer or his agency designee determines that a public hearing should be held prior to the adoption of any rule or rule change, a notice of the meeting date, time and place will be published in the *Louisiana Register*.

AUTHORITY NOTE: Promulgated in accordance with Act 454 of the 2018 Regular Legislative Session and R.S. 49:953, et seq.

HISTORICAL NOTE: Promulgated by the Department of Public Safety and Corrections, Office of Management and Finance, LR 46:701 (May 2020).

Title 55
PUBLIC SAFETY
Part XIII. Constables and Justices of the Peace Supplemental Pay

Chapter 1. Warrants

§101. Purpose

A. The warrant consist of:

1. a listing of each constable/JP in a given parish who is currently receiving supplemental pay; and

2. a signature sheet.

B. The warrant is the municipality's authorization for the Department of Public Safety to pay the listed individuals for the following month. For example, the warrant listing checks dated 02-28-85 is signed and returned to the Department of Public Safety, authorizing the issuance of checks dated 03-31-85.

AUTHORITY NOTE: Promulgated in accordance with R.S. 33:2218.2.
HISTORICAL NOTE: Promulgated by the Department of Public Safety and Corrections, Public Safety Services, LR 13:246 (April 1987).

§103. Who Can Sign the Warrants

A. The parish president is required to sign the warrants as the approving officer and the certifying officer should be police jury secretary/treasurer. The parish should submit a letter to the Department of Public Safety stating who will be signing the warrants. The parish should notify the Department of Public Safety when there is a change in either of the two authorized signatures.

AUTHORITY NOTE: Promulgated in accordance with R.S. 33:2218.2.
HISTORICAL NOTE: Promulgated by the Department of Public Safety and Corrections, Public Safety Services, LR 13:246 (April 1987).

§105. Extent of Municipality's Obligation

A. In the event that supplemental pay is issued to an individual in error, the Department of Public Safety will make every effort to recover the funds from the individual to whom the check was issued. However, because the municipality would have authorized any such erroneous payment by the warrant, the Department of Public Safety will, in the event that collection procedures from the individual fail, ask the municipality to reimburse the state. Extreme care should be taken in ascertaining each individual's eligibility before signing the warrant.

AUTHORITY NOTE: Promulgated in accordance with R.S. 33:2218.2.
HISTORICAL NOTE: Promulgated by the Department of Public Safety and Corrections, Public Safety Services, LR 13:246 (April 1987).

§107. How to Indicate Changes

A. An employee's payroll record can be changed by indicating such changes on the warrant. It is advisable to use a bright color of ink when making changes. Please do not obliterate the information already on the warrant, simply write the change directly above or beside the information you wish to change. Also, draw one line through the old information. See "Sample Warrant" (§2001) for a typical change of address.

AUTHORITY NOTE: Promulgated in accordance with R.S. 33:2218.2.
HISTORICAL NOTE: Promulgated by the Department of Public Safety and Corrections, Public Safety Services, LR 13:246 (April 1987).

§109. Due Date

A. The signed warrants are due in the Department of Public Safety by the tenth of the month. For example, warrants listing checks dated 02-28-85 are due on 03-10-85. It is important that warrants be returned by the due date to insure that all changes are made and the funds to pay each parish are on hand when the payroll checks are issued. If the warrants are not received by the issue date of the checks, the checks will be held in the office of the Department of Public Safety until said warrants are received.

AUTHORITY NOTE: Promulgated in accordance with R.S. 33:2218.2.
HISTORICAL NOTE: Promulgated by the Department of Public Safety and Corrections, Public Safety Services, LR 13:246 (April 1987).

Chapter 3. New Employees

§301. Required Documentation for New Employees

A. Please submit a copy of the "Oath of Office" in order to place a new constable or justice of the peace on the payroll. The secretary of state's office should supply the parish with the completed "Oath of Office" form. This form does not include all the necessary information for placing an employee on the payroll. Please be sure to supply the Department of Public Safety with the employee's name, address, Social Security number, and the date the individual took office.

AUTHORITY NOTE: Promulgated in accordance with R.S. 33:2218.2.
HISTORICAL NOTE: Promulgated by the Department of Public Safety and Corrections, Public Safety Services, LR 13:246 (April 1987).

§303. When to Submit the Oath of Office

A. The "Oath of Office" should be submitted as soon as possible after the individual has taken office. This will insure

that the employee goes on the payroll at the proper time and receives the correct amount of supplemental pay.

AUTHORITY NOTE: Promulgated in accordance with R.S. 33:2218.2.

HISTORICAL NOTE: Promulgated by the Department of Public Safety and Corrections, Public Safety Services, LR 13:246 (April 1987).

Chapter 5. Changes in Status

§501. When to Notify Public Safety

A. The Department of Public Safety should be notified of changes in status of employees within 15 days of the status change.

AUTHORITY NOTE: Promulgated in accordance with R.S. 33:2218.2.

HISTORICAL NOTE: Promulgated by the Department of Public Safety and Corrections, Public Safety Services, LR 13:246 (April 1987).

§503. Resignations

A. When a constable or justice of the peace resigns from office, please send a letter stating the employee's name, Social Security number, and the date the employee resigned from office. This letter should be sent within 15 days of the effective date of the resignation.

AUTHORITY NOTE: Promulgated in accordance with R.S. 33:2218.2.

HISTORICAL NOTE: Promulgated by the Department of Public Safety and Corrections, Public Safety Services, LR 13:246 (April 1987).

§505. Death

A. In the event of the death of a constable or justice of the peace, please send a letter stating the employee's name, Social Security number, and the date of death. This letter should be sent within 15 days of the date of death. Supplemental checks are issued on the condition that the payee is living at the time the check is issued. If death occurs at such a time that the state supplemental check is issued and released after the death of an employee, the check must be returned to the Department of Public Safety. Any supplemental pay to which the individual would have been entitled will then be made payable to the estate of the individual.

AUTHORITY NOTE: Promulgated in accordance with R.S. 33:2218.2.

HISTORICAL NOTE: Promulgated by the Department of Public Safety and Corrections, Public Safety Services, LR 13:246 (April 1987).

Chapter 7. Payroll Information

§701. Eligibility Requirements

A. A constable or justice of the peace is eligible for state supplemental pay when the individual takes office. Supplemental checks are issued at the end of the month. The new employee's first check will be dated the end of the month following receipt of the "Oath of Office." Below are some examples.

Date of Office	Date Oath Received	Date of First Check
01-10-85	01-20-85	01-31-85
01-30-85	02-07-85	02-28-85

AUTHORITY NOTE: Promulgated in accordance with R.S. 33:2218.2.

HISTORICAL NOTE: Promulgated by the Department of Public Safety and Corrections, Public Safety Services, LR 13:246 (April 1987).

§703. Cut Off Date for Eligibility for that Month's Check

A. The date of resignation could affect the amount of the individual's last supplemental check. The individual must be in office more than 15 consecutive days during the last month of office in order to receive supplemental pay for the full month. Below are some example resignation dates and the amounts of the checks for that month.

Resignation Date	Last Check Date	Last Check Amount
12-03-84	11-30-84	$21 (No December Check)
01-16-85	01-31-85	$21
01-15-85	01-31-85	$10.50
01-14-85	12-31-84	$21 (No January Check)

NOTE: Monthly amounts are based on fiscal year appropriation.

AUTHORITY NOTE: Promulgated in accordance with R.S. 33:2218.2.

HISTORICAL NOTE: Promulgated by the Department of Public Safety and Corrections, Public Safety Services, LR 13:246 (April 1987).

§705. Back Pay Policy

A. Because the Department of Public Safety's fiscal year ends on June 30, back pay cannot be paid beyond July of a given year without legislative approval. It is the responsibility of the parish to submit the necessary paperwork for an employee on a timely basis. In the event that the parish fails to submit the proper forms to the Department of Public Safety when the individual takes office, the Department of Public Safety will pay back pay only for the current fiscal year. See examples below.

Date of Office	Date Oath Received	First Check Dated	Amount
1. 08-01-84	12-11-84	12-31-84	$105
2. 05-01-84	08-07-84	08-31-84	$ 42

Explanation:

1. In this case, the employee was eligible for supplemental pay beginning on 08-01-84. The "Oath of Office" was received on 12-11-84, so the first check was issued on 12-31-84. The amount of the check is $21 for each month through December (August, September, October, November, and December).
2. In this case, eligibility began on 05-01-84. The oath was received on 08-07-84, too late to pay prior year money. The first check was dated 08-31-84, and paid the employee for the months of July and August only. The Legislative Budget Committee would have to approve payment for May and June.

AUTHORITY NOTE: Promulgated in accordance with R.S. 33:2218.2.

HISTORICAL NOTE: Promulgated by the Department of Public Safety and Corrections, Public Safety Services, LR 13:246 (April 1987).

§707. Stop Payments

A. In the event that a constable or justice of the peace reports a lost, damaged, or stolen supplemental check, the parish must notify the Department of Public Safety. The Department of Public Safety will then attempt to place a stop payment on the check. If the check has already cleared the bank, the Department of Public Safety will request a copy of both sides of the check from the bank and forward these to the individual. If the check is still outstanding and the bank sends the Department of Public Safety written confirmation of their acceptance of the stop payment order, the employee will be double paid on the next regular payroll. No checks may be issued between regular payrolls.

AUTHORITY NOTE: Promulgated in accordance with R.S. 33:2218.2.

HISTORICAL NOTE: Promulgated by the Department of Public Safety and Corrections, Public Safety Services, LR 13:246 (April 1987).

§709. Duplicate W-2's

A. An employee may request copies of his/her W-2's for any given year. The request should be written and include the name, address, Social Security number, and the year(s) for which duplicate W-2's are being requested.

AUTHORITY NOTE: Promulgated in accordance with R.S. 33:2218.2.

HISTORICAL NOTE: Promulgated by the Department of Public Safety and Corrections, Public Safety Services, LR 13:246 (April 1987).

§711. Correspondence

A. All correspondence should include the employee's Social Security number. Address all correspondence to:

Louisiana Department of Public Safety and Corrections
Constables and Justices of the Peace Supplemental Pay
Post Office Box 66909
Baton Rouge, LA 70896.

AUTHORITY NOTE: Promulgated in accordance with R.S. 33:2218.2.

HISTORICAL NOTE: Promulgated by the Department of Public Safety and Corrections, Public Safety Services, LR 13:246 (April 1987).

Chapter 20. Sample Forms

§2001. Sample Warrant

SPR020C A
PAGE 000

CONSTABLE SUPPLEMENTAL PAY
STATE OF LOUISIANA-DEPARTMENT OF PUBLIC SAFETY
P.O. BOX 66909 BATON ROUGE, LA 70896

WARRANT: THIS BEING A CERTIFIED LIST OF CONSTABLES ENTITLED TO SUPPLEMENTAL PAY IN ACCORDANCE WITH ACT 11 OF 1980 ET SEQ.

CITY OR TOWN OF: ANYTOWN
TOWN CODE: 9999

NAME ADDRESS	SOC-SEC-NUM ADDRESS-2	CITY	DATE EMPLD STATE	ZIP	YRS SER	AMOUNT TO BE PAID	CHECK DATE MO DA YR	CHECK NUMBER
DOE JOHN ~~123 MAIN ST.~~ 246 6TH ST	999-99-9999	ANYTOWN	01 01 84 LA	000070700	01	$ 50.00	05 31 85	000000
DOE JOHN 123 MAIN ST	999-99-9999	ANYTOWN	01 01 84 LA	000070700	01	$ 50.00	05 31 85	000000
DOE JOHN ~~123 MAIN ST~~ RESIGNED	999-99-9999 5-25-85	ANYTOWN	01 01 84 LA	000070700	01	$ 50.00	05 31 85	000000
DOE JOHN 123 MAIN ST	999-99-9999	ANYTOWN	01 01 84 LA	000070700	01	$ 50.00	05 31 85	000000
DOE JOHN 123 MAIN ST	999-99-9999	ANYTOWN	01 01 84 LA	000070700	01	$ 50.00	05 31 85	000000

SPR020C A
PAGE 000

CITY OR TOWN OF: ANYTOWN
TOWN CODE: 9999

CONSTABLE SUPPLEMENTAL PAY
STATE OF LOUISIANA-DEPARTMENT OF PUBLIC SAFETY
P.O. BOX 66909 BATON ROUGE, LA 70896

WARRANT: THIS BEING A CERTIFIED LIST OF CONSTABLES ENTITLED TO SUPPLEMENTAL PAY IN ACCORDANCE WITH ACT 11 OF 1980 ET SEQ.

NAME ADDRESS	SOC-SEC-NUM ADDRESS-2	CITY	DATE EMPLD STATE ZIP	YRS SER	AMOUNT TO BE PAID	CHECK DATE MO DA YR	CHECK NUMBER
CONSTABLES	5		CITY TOTAL =		$985.00		

APPROVED BY A. Anypres
APPROVING OFFICER'S SIGNATURE

A. ANYPRES — PARISH PRESIDENT
NAME — TITLE

CERTIFIED BY Y. Mee
CERTIFYING OFFICER'S SIGNATURE

Y. MEE — PARISH CLERK
NAME — TITLE

ONE COMPLETE COPY OF THIS WARRANT IS TO BE CORRECTED, SIGNED, AND RETURNED BY THE 10TH OF EACH MONTH.

*** NOTE *** ANY QUESTIONS PLEASE CONTACT DOBY VICKNAIR AT 504 925-6444 *** NOTE ***

AUTHORITY NOTE: Promulgated in accordance with R.S. 33:2218.2.

HISTORICAL NOTE: Promulgated by the Department of Public Safety and Corrections, Public Safety Services, LR 13:246 (April 1987).

Title 55
PUBLIC SAFETY
Part XV. Firemen Supplemental Pay

Chapter 1. Warrants

§101. Purpose

A. The warrant consists of a listing of each employee in a given department who is currently receiving supplemental pay and a signature sheet. The warrant is the governing authority's authorization for the Department of Public Safety to pay the listed individuals for the following month. For example, the warrant listing checks dated 02-28-85 is signed and returned to the Department of Public Safety authorizing the issuance of checks dated 03-31-85.

AUTHORITY NOTE: Promulgated in accordance with R.S. 33:2006 et seq.

HISTORICAL NOTE: Promulgated by the Department of Public Safety and Corrections, Public Safety Services, LR 13:246 (April 1987).

§103. Who Can Sign the Warrants

A. The fire chief is required to sign the warrants as the approving officer. The certifying officer should be the mayor or some other designated official of the governing authority. The governing authority should notify Public Safety stating who the certifying officer will be. The governing authority should notify Public Safety when there is a change in either of the two authorized signatures.

AUTHORITY NOTE: Promulgated in accordance with R.S. 33:2006 et seq.

HISTORICAL NOTE: Promulgated by the Department of Public Safety and Corrections, Public Safety Services, LR 13:246 (April 1987).

§105. Extent of Municipalities' Obligation

A. In the event that supplemental pay is issued to an individual in error, the Department of Public Safety will collect the funds from the fire district to whom the check(s) was issued because the individual(s) was erroneously left on the warrant. Extreme care should be taken in ascertaining each individual's eligibility for the next month before signing the warrant.

AUTHORITY NOTE: Promulgated in accordance with R.S. 33:2006 et seq.

HISTORICAL NOTE: Promulgated by the Department of Public Safety and Corrections, Public Safety Services, LR 13:246 (April 1987).

§107. How to Indicate Changes

A. An employee's payroll record can be changed by indicating such changes on the warrant. It is advisable to use a bright color of ink when making changes. Please do not obliterate the information already on the warrant—simply write the change directly above or beside the information you wish to change. Also, draw one line through the old information. See "Sample Warrant" (§2009) for a typical change of address.

AUTHORITY NOTE: Promulgated in accordance with R.S. 33:2006 et seq.

HISTORICAL NOTE: Promulgated by the Department of Public Safety and Corrections, Public Safety Services, LR 13:246 (April 1987).

§109. Due Date

A. The signed warrants are due in the Department of Public Safety by the tenth of the month. For example, warrants listing checks dated 02-28-85 are due on 03-10-85. It is important that warrants be returned by the due date to insure that all changes are made and the funds to pay each department are on hand when the payroll checks are issued. If the warrants are not received by the issue date of the checks, the checks will be held in the Office of the Department of Public Safety until said warrants are received.

AUTHORITY NOTE: Promulgated in accordance with R.S. 33:2218.2.

HISTORICAL NOTE: Promulgated by the Department of Public Safety and Corrections, Public Safety Services, LR 13:246 (April 1987).

Chapter 3. Applications

§301. Required Supportive Documentation

A. For a department covered by municipal fire and police civil service, attach a copy of the Civil Service Personnel Action Form showing the employment date and classification of the employee. See "Sample Application" with Personnel Action Form (§2003).

B. For a department not covered by Civil Service, attach a copy of one of the following:

1. the minutes of the governing authority's meeting disclosing the hire date and salary;

2. payroll sheet indicating beginning date and rate of pay.

AUTHORITY NOTE: Promulgated in accordance with R.S. 33:2006 et seq.

HISTORICAL NOTE: Promulgated by the Department of Public Safety and Corrections, Public Safety Services, LR 13:246 (April 1987).

§303. Prior Service

A. Applicants are allowed credit for previous full-time service with Louisiana fire departments provided the applicant met all supplemental pay requirements during that prior period. When submitting an application for an employee who has prior fire service, attach a completed Certificate of Prior Service from each department with

which the applicant has been employed. See "Sample Certificate of Prior Service" (§2005). It is the fire department's responsibility to correspond with the other fire departments which have employed a particular employee in order to obtain Certificates of Prior Service from those departments and submit all necessary forms with the application.

AUTHORITY NOTE: Promulgated in accordance with R.S. 33:2006 et seq.

HISTORICAL NOTE: Promulgated by the Department of Public Safety and Corrections, Public Safety Services, LR 13:246 (April 1987).

§305. When to Submit Applications to Public Safety

A. As covered in §905, new employees must wait one year before beginning to draw supplemental pay. The application must be submitted within 60 days of the end of this waiting period. It is the board's policy to pay only one month of back pay in the event of late submission of an application. See Section §913 for more detail on "Back Pay".

AUTHORITY NOTE: Promulgated in accordance with R.S. 33:2006 et seq.

HISTORICAL NOTE: Promulgated by the Department of Public Safety and Corrections, Public Safety Services, LR 13:246 (April 1987).

Chapter 5. Changes in Status

§501. When to Notify Public Safety

A. Notification of a change in employee status must be received within 15 days of the effective date of the change. These changes may be indicated on the warrant if time permits (warrants are due on the tenth). Otherwise, some other form of written notification is required. For example, if John Doe ends his employment on the eleventh (after the warrant has been returned to the Department of Public Safety), it will be too late to notify the Department of Public Safety on the next warrant. In cases like this, a letter should be sent immediately.

AUTHORITY NOTE: Promulgated in accordance with R.S. 33:2006 et seq.

HISTORICAL NOTE: Promulgated by the Department of Public Safety and Corrections, Public Safety Services, LR 13:246 (April 1987).

§503. Resignations

A. Notification by Warrant. Draw one line through the employee's name and write the resignation date beside the name under the Social Security number. See "Sample Warrant" (§2009).

B. Notification by Letter. The letter should state the employee's name, Social Security number, and the resignation date. If applicable, the Civil Service Personnel Action Form should be attached to the letter.

C. Definition

Resignation Date—the last day that the fire department pays the employee. For example, Jose Hosehandler turned in his two week notice on March 6 and took some leave he was entitled to for the remaining two weeks of his employment. His resignation was effective on March 20; he received his final regular pay check on March 23. The correct resignation date as far as the supplemental pay is concerned is March 20 because that is the last day for which the employee was paid by the municipality.

AUTHORITY NOTE: Promulgated in accordance with R.S. 33:2006 et seq.

HISTORICAL NOTE: Promulgated by the Department of Public Safety and Corrections, Public Safety Services, LR 13:246 (April 1987).

§505. Suspensions

A. Notification by Warrant. Only when an employee is suspended 15 days or more, draw one line through the employee's name and write the suspension date beside the name under the Social Security number. See "Sample Warrant" (§2009).

B. Notification by Letter. The letter should state the employee's name, Social Security number, and the suspension date. If applicable, the Civil Service Personnel Action Form should be attached to the letter.

AUTHORITY NOTE: Promulgated in accordance with R.S. 33:2006 et seq.

HISTORICAL NOTE: Promulgated by the Department of Public Safety and Corrections, Public Safety Services, LR 13:246 (April 1987).

§507. Leave without Pay

A. L.W.O.P. is treated the same as a resignation in the supplemental pay system. See §503 for information on how to notify Public Safety when an employee resigns.

AUTHORITY NOTE: Promulgated in accordance with R.S. 33:2006 et seq.

HISTORICAL NOTE: Promulgated by the Department of Public Safety and Corrections, Public Safety Services, LR 13:246 (April 1987).

§509. Change in Duties

A. Changes in duties should not be indicated on the warrant. Instead, a letter stating the employee's name, Social Security number and a brief explanation of the change in the employee's duties should be submitted to Public Safety.

B. Definition

Duties—the tasks which comprise the majority of what an employee is required to do while on the job.

AUTHORITY NOTE: Promulgated in accordance with R.S. 33:2006 et seq.

HISTORICAL NOTE: Promulgated by the Department of Public Safety and Corrections, Public Safety Services, LR 13:246 (April 1987).

§511. Change in Classification/Title

A. As with changes in duties, a letter is required. Where applicable, the Civil Service Personnel Action Form should be attached to the letter. The letter should state the employee's name, Social Security number, nature of the change, and the effective date of the change.

AUTHORITY NOTE: Promulgated in accordance with R.S. 33:2006 et seq.

HISTORICAL NOTE: Promulgated by the Department of Public Safety and Corrections, Public Safety Services, LR 13:246 (April 1987).

§513. Workmen's Comp

A. An employee who receives Workmen's Comp benefits may still be eligible for state supplemental pay. The Board of Review's policy is to review each case in which an employee is receiving Workmen's Comp benefits to determine the employee's eligibility. The general policy of the board is to continue to pay supplemental pay as long as the employee is retained as a regular full-time employee. Notification must be in the form of a letter stating the employee's name, Social Security number, and the date the employee began receiving Workmen's Comp benefits. For example, Dudley Driver was injured on the job on February 10. On March 7 he received his first Workmen's Comp check. The Comp benefit was declared to be retroactive to the date of injury, so the employee went on Workmen's Comp on February 10. The letter should also state which portion of the employee's salary is paid by the municipality and which portion is paid by Workmen's Comp.

AUTHORITY NOTE: Promulgated in accordance with R.S. 33:2006 et seq.
HISTORICAL NOTE: Promulgated by the Department of Public Safety and Corrections, Public Safety Services, LR 13:246 (April 1987).

§515. Death

A. In the event of an employee death, written notification must be received within 15 days. If the employee was due any supplemental pay, the check will be payable to his estate. Please return any supplemental checks made payable to an employee who is deceased.

AUTHORITY NOTE: Promulgated in accordance with R.S. 33:2006 et seq.
HISTORICAL NOTE: Promulgated by the Department of Public Safety and Corrections, Public Safety Services, LR 13:246 (April 1987).

Chapter 7. Reinstatements

§701. Reinstatement from Suspension

A. When an employee returns to work from a suspension, submit a Civil Service Personnel Action Form showing the suspension date and the date of return. For fire departments not under Civil Service, a letter stating the suspension date and the date of return is required.

AUTHORITY NOTE: Promulgated in accordance with R.S. 33:2006 et seq.
HISTORICAL NOTE: Promulgated by the Department of Public Safety and Corrections, Public Safety Services, LR 13:246 (April 1987).

§703. Reinstatement from Resignation

A. When an employee resigns and later returns to work, a new application must be submitted with a Certificate of Prior Service. See Chapter 3 for information on "Applications".

AUTHORITY NOTE: Promulgated in accordance with R.S. 33:2006 et seq.
HISTORICAL NOTE: Promulgated by the Department of Public Safety and Corrections, Public Safety Services, LR 13:246 (April 1987).

§705. Reinstatement from Workmen's Comp

A. To reinstate an employee who was found to be ineligible for supplemental pay while on Workmen's Comp, a letter must be sent stating the employee's name, Social Security number, and a brief recap of the period for which the employee was on Comp. The date that the employee returns is the date that his full salary is paid by the municipality, which may not necessarily be his first day back to work. For example, Dudley Driver was put back on the fire department work schedule effective March 15. His first day to actually work was March 17, but he was paid for the entire week beginning March 15. His reinstatement date was March 15.

AUTHORITY NOTE: Promulgated in accordance with R.S. 33:2006 et seq.
HISTORICAL NOTE: Promulgated by the Department of Public Safety and Corrections, Public Safety Services, LR 13:246 (April 1987).

§707. Reinstatement from L.W.O.P.

A. Same as "Resignation". See §703 for information.

AUTHORITY NOTE: Promulgated in accordance with R.S. 33:2006 et seq.
HISTORICAL NOTE: Promulgated by the Department of Public Safety and Corrections, Public Safety Services, LR 13:246 (April 1987).

Chapter 9. Payroll Information

§901. Eligibility Requirements for Supplemental Pay

A. The eligibility requirements for supplemental pay are:

1. the employee must be a full-time certified firefighter, performing his regular job duties at least 35 hours weekly;

2. the employee must be paid a minimum monthly salary of $300 from municipal funds;

3. for departments not under Civil Service, the employee must not be clerical, secretarial, or a mechanic.

B. See §903 for information on "Board Approval of Applications".

AUTHORITY NOTE: Promulgated in accordance with R.S. 33:2006 et seq.
HISTORICAL NOTE: Promulgated by the Department of Public Safety and Corrections, Public Safety Services, LR 13:246 (April 1987).

§903. Board Approval of Applications

A. All applications, for supplemental pay are subject to board approval. Applicants whose job duties and/or classifications are among those the board routinely approves are placed on the payroll in the appropriate month prior to board approval. The board meets quarterly and approves these routine additions to the payroll for the quarter just ended. Applicants whose duties and/or classifications are not among those the board routinely approves or applications

with questionable information are put before the board for an eligibility ruling.

B. In the event of an employee's application being put before the board, the fire chief is notified of the meeting and is invited to attend and participate in any discussion pertaining to the application. The fire chief is also notified of the board's decision.

C. Decisions of the board are final as per R.S. 33:2009. However, the employee has the right to appeal a board decision. Written notice of intent to appeal the board's decision must be submitted to the secretary of the board and the appeal will be included on the next regular meeting agenda. The board also decides back pay cases on an individual basis. See §913 for information on the policies of the board on "Back Pay".

AUTHORITY NOTE: Promulgated in accordance with R.S. 33:2006 et seq.

HISTORICAL NOTE: Promulgated by the Department of Public Safety and Corrections, Public Safety Services, LR 13:246 (April 1987).

§905. Waiting Period for New Employees

A. There is a full one-year waiting period for new employees. This includes employees who have been re-classified and are eligible under their new classifications, but were not eligible under their old classifications. The one-year waiting period must begin on the first day of the month. The following examples are provided to illustrate computation of the dates of first supplemental checks.

Employment Date	Add 1 Year	Next First	First Check Date
04-13-86	04-13-87	05-01-87	05-31-87
05-01-86	05-01-87	05-01-87	05-31-87
05-02-86	05-02-87	06-01-87	06-30-87
06-01-86	06-01-87	06-01-87	06-30-87

NOTE: If an employee ends his employment with the fire department before his first check is issued, the fire department must notify the Department of Public Safety within 15 days, just like any other change in status. See Chapter 5 for information on changes in status.

AUTHORITY NOTE: Promulgated in accordance with R.S. 33:2006 et seq.

HISTORICAL NOTE: Promulgated by the Department of Public Safety and Corrections, Public Safety Services, LR 13:246 (April 1987).

§907. Step Increases

A. The supplemental pay scale is as follows.

Period of Service	Supplemental Pay Rate
1 Year	$174
3 Years	$229
6 Years	$260

NOTE: Monthly payments are based upon full appropriation for that fiscal year. If funds are not appropriated, the pay scale will be decreased.

B. The step increases are done automatically by computer. It is not necessary to notify the Department of Public Safety when an employee is due a step increase. However, the Department of Public Safety should be notified when the fire department feels that an employee should have gotten an increase but did not. This sometimes occurs when there is a discrepancy in an employee's pay record as far as prior service is concerned.

AUTHORITY NOTE: Promulgated in accordance with R.S. 33:2006 et seq.

HISTORICAL NOTE: Promulgated by the Department of Public Safety and Corrections, Public Safety Services, LR 13:246 (April 1987).

§909. Cut Off Date for Raises

A. The cut off date for step increases is the twentieth of the month. See computation examples below.

Employment Date	1 Year Service Date	Raise on Check Date
02-03-84	02-03-85	02-28-85
02-20-84	02-20-85	02-28-85
02-21-84	02-21-85	03-31-85

AUTHORITY NOTE: Promulgated in accordance with R.S. 33:2006 et seq.

HISTORICAL NOTE: Promulgated by the Department of Public Safety and Corrections, Public Safety Services, LR 13:246 (April 1987).

§911. Cut Off Date for Eligibility for that Month's Check

A. The cut off date for eligibility for that month's check is the sixteenth of the month for which the check is dated. If an employee was on the fire department payroll through and including the sixteenth, he is eligible for the entire check. If an employee is on the payroll through and including the fifteenth, he is eligible for half of regular supplemental check. He is not eligible for any of the check if he is on the payroll less than 15 days. See examples below:

Termination Date	Regular Pay	Amount Eligible for/Check Dated
02-10-85	$260	$ 0 / 02-28-85
02-15-85	$260	$130 / 02-28-85
02-16-85	$260	$260 / 02-28-85

NOTE: It is the responsibility of the fire department to ascertain that each employee is eligible for a particular supplemental check before releasing the check to the employee. If an employee's status changes before the sixteenth of the month, and notification is not received by the Department of Public Safety before the checks for that month are issued, return the check to the Department of Public Safety.

AUTHORITY NOTE: Promulgated in accordance with R.S. 33:2006 et seq.

HISTORICAL NOTE: Promulgated by the Department of Public Safety and Corrections, Public Safety Services, LR 13:246 (April 1987).

§913. Back Pay Policy

A. Because the Department of Public Safety's fiscal year ends on June 30, back supplemental pay cannot be paid beyond July without Legislative approval. The Board of Review must approve all back supplemental pay, whether or not it extends beyond the current fiscal year.

1. Back Pay in Current Fiscal Year. The board will approve only one month of back pay for an employee of a fire department which already has employees on the supplemental payroll. Except in extreme cases involving litigation, which the board will consider individually, the board feels that there is no reason for the fire department to be more than one month late in submitting the appropriate forms for the employee. For fire departments which do not have any employees on the payroll and may not have been aware of the state supplemental pay or the procedures to follow in order to receive supplemental pay, the board will consider each case on an individual basis.

2. Back Pay Extending beyond Current Fiscal Year. By Act 110 of the 1982 Legislature, after board approval, applications for back pay extending beyond current fiscal year must be submitted to the Legislative Budget Committee for final approval before payment can be made to the individual.

NOTE: The board feels that it is the fire department's responsibility to submit all necessary forms in time for an employee to begin receiving supplemental pay after three months of service. If the fire department is negligent and submits the application late for no apparent reason, then the fire department should compensate the employee for any back pay the board denies.

AUTHORITY NOTE: Promulgated in accordance with R.S. 33:2006 et seq.

HISTORICAL NOTE: Promulgated by the Department of Public Safety and Corrections, Public Safety Services, LR 13:246 (April 1987).

§915. Stop Payments

A. When an employee reports a lost, stolen or damaged supplemental check, the fire department should notify the Department of Public Safety immediately. The Department of Public Safety will place a stop payment on the check. If the check has already been cashed, the Department of Public Safety will send a copy of the front and back of the check to the fire department for the employee's records. If the stop payment is accepted, the employee will be double paid on the next regular payroll. No duplicate checks will be issued. If the check is found before the next regular payroll check is issued, it should be returned to the Department of Public Safety.

AUTHORITY NOTE: Promulgated in accordance with R.S. 33:2006 et seq.

HISTORICAL NOTE: Promulgated by the Department of Public Safety and Corrections, Public Safety Services, LR 13:246 (April 1987).

§917. Duplicate W-2's

A. The Department of Public Safety will issue duplicate W-2's for any calendar year requested. Duplicate W-2's should be requested by the fire department.

AUTHORITY NOTE: Promulgated in accordance with R.S. 33:2006 et seq.

HISTORICAL NOTE: Promulgated by the Department of Public Safety and Corrections, Public Safety Services, LR 13:246 (April 1987).

§919. Correspondence

A. All correspondence to the Department of Public Safety should come from the fire department, not the individual employee. In all correspondence, please include the employee's name and Social Security number, and the name, address, and telephone number of the fire department. Address all correspondence to:

Louisiana Department of Public Safety and Corrections
Firemen's Supplemental Pay
Post Office Box 66909
Baton Rouge, LA 70896-6909

AUTHORITY NOTE: Promulgated in accordance with R.S. 33:2006 et seq.

HISTORICAL NOTE: Promulgated by the Department of Public Safety and Corrections, Public Safety Services, LR 13:246 (April 1987).

Chapter 20. Sample Forms

§2001. Sample Application with Prior Service—Civil Service

LOUISIANA DEPARTMENT OF PUBLIC SAFETY AND CORRECTIONS

FIREMEN SUPPLEMENTAL PAY

R.S. 33:2001-2003, ACT 82 of 1963

INFORMATION REQUEST FOR NEW EMPLOYEES

LOUISIANA DEPARTMENT OF PUBLIC SAFETY
AND CORRECTIONS
P.O. BOX 66909
BATON ROUGE, LA 70896-6909
ATTN.: FIREMEN SUPPLEMENTAL PAY

CITY OR FIRE DEPARTMENT: Anytown Fire Department	NAME: Fred F. Firefighter
STREET ADDRESS OR P.O. BOX: 123 Any Street	ADDRESS: 364 Main Street
CITY: Anytown, STATE: La ZIP CODE: 70000	CITY: Anytown, STATE: La ZIP CODE: 70000
CITY TELEPHONE NO.: (A.C. 504) 295-9999	SOCIAL SECURITY NO.: 999-99-9999

EMPLOYMENT DATE: January 1, 1985	IS EMPLOYMENT FULL TIME? ☒ Yes ☐ No	NO. OF HOURS WORKED PER WEEK: 60 ☒ 40 HOURS OR MORE ☐ LESS THAN 40 HOURS	MONTHLY SALARY: $ 1,000.00
DOES EMPLOYEE BELONG TO MUNICIPAL FIRE AND POLICE CIVIL SERVICE? ☒ Yes ☐ No	IF YES, ATTACH A COPY OF PERSONNEL ACTION FORM. IF NO, ATTACH A COPY OF FIRE BOARD MEETING. LIST DUTIES.		
HAS EMPLOYEE BEEN CERTIFIED AS A FIREFIGHTER? ☒ Yes ☐ No	IF YES, ATTACH COPY OF CERTIFICATION. IF NO, GIVE AN EXPLANATION IN "REMARKS" SECTION.		IS APPLICANT DRAWING A PENSION? ☒ Yes ☐ No IF YES, NAME SOURCE.
PREVIOUS MUNICIPAL FIREFIGHTER EMPLOYMENT (Attach Prior Service forms): Anothertown Fire Department			DATES OF PREVIOUS EMPLOYMENT: 01-01-76 - 12-31-77

We hereby certify that the person named in this application is a full-time Certified Firefighter of the above named fire department, paid from Municipal funds and is entitled to supplemental pay in accordance with Act 82 of 1963 legislature.

EMPLOYEE SIGNATURE: Fred Firefighter	NOTARY: N. Notary	DATE: January 20, 1985
MAYOR'S OR PRESIDENT'S SIGNATURE: Designated Person	NOTARY: N. Notary	DATE: January 20, 1985
FIRE CHIEF'S SIGNARTURE: Alan Anyname	NOTARY: N. Notary	DATE: January 20, 1985

REMARKS:

"To knowingly submit false information could constitute a criminal offense, such as, false swearing, falsification of public document or theft by fraud. Furthermore, negligent submission of erroneous information may subject such negligent person to personal liability for any resulting overpayment of supplemental pay."

DPSMF 1468 (R 11/87)

AUTHORITY NOTE: Promulgated in accordance with R.S. 33:2006 et seq.

HISTORICAL NOTE: Promulgated by the Department of Public Safety and Corrections, Public Safety Services, LR 13:246 (April 1987).

§2003. Sample Civil Service Personnel Action Form

C.S. Form No. 3

TO THE MUNICIPAL FIRE AND POLICE CIVIL SERVICE BOARD

Anytown, Louisiana
(city or fire district)

PERSONNEL ACTION

Date January 8, 1985

1. Employee's Name	2. Department	3. Personnel Action (See Reverse Side for Designation)	4. Effective Date of Action
Fred F. Firefighter Date of Birth 05-10-60 Social Security No. 999-99-9999	Fire	Probational Appointment	01-01-85

5. From (Class Title)	6. To (Class Title)	7. (Monthly Salary)
	Probational Firefighter	$1,000.00

8. Remarks Employee has passed exam and is to begin his working test period.

Recommended:

1. _____, Chief

2. Alan A. Anyone, Supervisor

Approved:

_____, Chairman
Municipal Fire and Police Civil Service Board
John Doe III

Approved:

_____
Appointing Authority
Maurice M. Mayor

AUTHORITY NOTE: Promulgated in accordance with R.S. 33:2006 et seq.

HISTORICAL NOTE: Promulgated by the Department of Public Safety and Corrections, Public Safety Services, LR 13:246 (April 1987).

§2005. Sample Certificate of Prior Service

LOUISIANA DEPARTMENT OF PUBLIC SAFETY AND CORRECTIONS

FIREMEN SUPPLEMENTAL PAY

R.S. 33:2001 – 2003, ACT 82 of 1963

CERTIFICATE OF PRIOR SERVICE

LOUISIANA DEPARTMENT OF PUBLIC SAFETY
AND CORRECTIONS
P.O. BOX 66909
BATON ROUGE, LA 70896-6909
ATTN.: FIREMENS' SUPPLEMENTAL PAY

CITY OR FIRE DEPARTMENT: Anothertown Fire Department	NAME: Fred F. Firefighter
P. O. Box 000	ADDRESS: 145 First Street
Anothertown, La 70000	CITY: Anytown, La — ZIP: 70000
	SOCIAL SECURITY NO.

DATES OF EMPLOYMENT	FROM	TO	CLASSIFICATION
	01-01-76	12-31-77	Firefighter

DUTIES

SALARY	NO. OF HOURS WORKED PER WEEK	
$825.00	50	I HEREBY CERTIFY THAT THE PERSON NAMED IN THIS APPLICATION WAS A PAID FULL-TIME EMPLOYEE OF THIS DEPARTMENT.

APPROVING OFFICER: A. Anothermayor	TITLE: Mayor
FIRE CHIEF: M. Mainman	DATE: January 11, 1985

REMARKS:

Appendix III: Sample Certificate of Prior Service

DPSMF 1469 (R 12/85)

AUTHORITY NOTE: Promulgated in accordance with 33:2006 et seq.

HISTORICAL NOTE: Promulgated by the Department of Public Safety and Corrections, Public Safety Services, LR 13:246 (April 1987).

§2007. Sample Application—Non-Civil Service

LOUISIANA DEPARTMENT OF PUBLIC SAFETY AND CORRECTIONS

FIREMEN SUPPLEMENTAL PAY

R.S. 33:2001-2003, ACT 82 of 1963

INFORMATION REQUEST FOR NEW EMPLOYEES

LOUISIANA DEPARTMENT OF PUBLIC SAFETY
AND CORRECTIONS
P.O. BOX 66909
BATON ROUGE, LA 70896-6909
ATTN.: FIREMEN SUPPLEMENTAL PAY

CITY OR FIRE DEPARTMENT: Anytown Fire Department	NAME: Fred F. Firefighter
STREET ADDRESS OR P.O. BOX: 123 Any Street	ADDRESS: 364 Main Street
CITY: Anytown, STATE: La. ZIP CODE: 70000	CITY: Anytown, STATE: La ZIP CODE: 70000
CITY TELEPHONE NO.: (A.C. 504) 295-9999	SOCIAL SECURITY NO.: 999-99-9999

EMPLOYMENT DATE: January 1, 1985	IS EMPLOYMENT FULL TIME? ☒ Yes ☐ No	NO. OF HOURS WORKED PER WEEK: 60 ☒ 40 HOURS OR MORE ☐ LESS THAN 40 HOURS	MONTHLY SALARY: $ 1,000.00
DOES EMPLOYEE BELONG TO MUNICIPAL FIRE AND POLICE CIVIL SERVICE? ☐ Yes ☒ No	IF YES, ATTACH A COPY OF PERSONNEL ACTION FORM. IF NO, ATTACH A COPY OF FIRE BOARD MEETING. LIST DUTIES.		
HAS EMPLOYEE BEEN CERTIFIED AS A FIREFIGHTER? ☒ Yes ☐ No	IF YES, ATTACH COPY OF CERTIFICATION. IF NO, GIVE AN EXPLANATION IN "REMARKS" SECTION.	IS APPLICANT DRAWING A PENSION? ☐ Yes ☒ No IF YES, NAME SOURCE.	
PREVIOUS MUNICIPAL FIREFIGHTER EMPLOYMENT (Attach Prior Service forms)		DATES OF PREVIOUS EMPLOYMENT	

We hereby certify that the person named in this application is a full-time Certified Firefighter of the above named fire department, paid from Municipal funds and is entitled to supplemental pay in accordance with Act 82 of 1963 legislature.

EMPLOYEE SIGNATURE	Fred Firefighter	NOTARY: N. Notary	DATE: January 20, 1985
MAYOR'S OR PRESIDENT'S SIGNATURE	Designated Person	NOTARY: N. Notary	DATE: January 20, 1985
FIRE CHIEF'S SIGNARTURE	Alan Anyname	NOTARY: N. Notary	DATE: January 20, 1985

REMARKS:

"To knowingly submit false information could constitute a criminal offense, such as, false swearing, falsification of public document or theft by fraud. Furthermore, negligent submission of erroneous information may subject such negligent person to personal liability for any resulting overpayment of supplemental pay."

DPSMF 1468 (R 11/87)

AUTHORITY NOTE: Promulgated in accordance with R.S. 33:2006 et seq.

HISTORICAL NOTE: Promulgated by the Department of Public Safety and Corrections, Public Safety Services LR 13:246 (April 1987).

§2009. Sample Warrant

SPR020F A
PAGE 000

FIREMEN SUPPLEMENTAL PAY
STATE OF LOUISIANA DEPARTMENT OF PUBLIC SAFETY
P.O. BOX 66909, BATON ROUGE, LA 70896

WARRANT: THIS BEING A CERTIFIED LIST OF MUNICIPAL FIREMEN ENTITLED TO SUPPLEMENTAL PAY IN ACCORDANCE WITH LA. R.S. 33 2001-2201 ET SEQ.

CITY OR TOWN OF: ANYTOWN
TOWN CODE: 9999

NAME ADDRESS	SOC-SEC-NUM ADDRESS-2	CITY	DATE EMPLD STATE ZIP	YRS SERV	AMOUNT TO BE PAID	CHECK DATE MO	DA	YR	CHECK NUMBER
DOE JOHN 296 SOME STREET	999-99-9999	ANYTOWN, LA	01 01 84 LA 000070700	01	$197.00	05	31	85	000000
DOE JOHN 123 MAIN ST	999-99-9999	ANYTOWN, LA	01 01 84 LA 000070700	01	$197.00	05	31	85	000000
DOE JOHN 123 MAIN ST	999-99-9999 RESIGNED 05-22-85	ANYTOWN, LA	01 01 84 LA 000070700	01	$197.00	05	31	85	000000
DOE JOHN 123 MAIN ST	999-99-9999 SUSPENDED 06-02-85	ANYTOWN, LA	01 01 84 LA 000070700	01	$197.00	05	31	85	000000
DOE JOHN 123 MAIN ST	999-99-9999	ANYTOWN, LA	01 01 84 LA 000070700	01	$197.00	05	31	85	000000

SAMPLE WARRANT

SPR02F A
PAGE 000

CITY OR TOWN OF: ANYTOWN
TOWN CODE: 9999

FIREMEN SUPPLEMENTAL PAY
STATE OF LOUISIANA-DEPARTMENT OF PUBLIC SAFETY
P.O. BOX 66909 BATON ROUGE, LA 70896

WARRANT: THIS BEING A CERTIFIED LIST OF MUNICIPAL FIREMEN ENTITLED TO SUPPLEMENTAL PAY IN ACCORDANCE WITH LA. R.S. 33 2001-2201 ET SEQ.

NAME ADDRESS	SOC-SEC-NUM ADDRESS-2	CITY	DATE EMPLD STATE ZIP	YRS SER	AMOUNT TO BE PAID	CHECK DATE MO DA YR	CHECK NUMBER
FIREMEN	5		CITY TOTAL =		$985.00		

APPROVED BY _____
APPROVING OFFICER'S SIGNATURE

Alan A. Anyname Chief
NAME TITLE

CERTIFIED BY _____
CERTIFYING OFFICER'S SIGNATURE

Maurice M. Mayor Mayor
NAME TITLE

ONE COMPLETE COPY OF THIS WARRANT IS TO BE CORRECTED, SIGNED, AND RETURNED BY THE 10TH OF EACH MONTH.

*** NOTE *** ANY QUESTIONS PLEASE CONTACT DOBY VICKNAIR AT 504 925-6444 *** NOTE ***

AUTHORITY NOTE: Promulgated in accordance with R.S. 33:2006 et seq.

HISTORICAL NOTE: Promulgated by the Department of Public Safety and Corrections, Public Safety Services, LR 13:246 (April 1987).

Title 55

PUBLIC SAFETY

Part XVII. Municipal Police Officers Supplemental Pay

Chapter 1. Warrants

§101. Purpose

A. The warrant consists of a listing of each employee in a given department who is currently receiving supplemental pay and a signature sheet. The warrant is the municipality's authorization for the Department of Public Safety to pay the listed individuals for the following month. For example, the warrant listing checks dated 02-28-85 is signed and returned to D.P.S., authorizing the issuance of checks dated 03-31-85.

AUTHORITY NOTE: Promulgated in accordance with R.S. 33:2218.7 et seq.

HISTORICAL NOTE: Promulgated by the Department of Public Safety and Corrections, LR 13:247 (April 1987).

§103. Who Can Sign the Warrants

A. The police chief is required to sign the warrants as the approving officer. The certifying officer should be the mayor. The municipality should notify the Department of Public Safety when there is a change in either of the two authorized signatures. See "Sample Warrant" (§2013) for correct placement of signatures.

AUTHORITY NOTE: Promulgated in accordance with R.S. 33:2218.7 et seq.

HISTORICAL NOTE: Promulgated by the Department of Public Safety and Corrections, LR 13:247 (April 1987).

§105. Extent of Municipalities' Obligation

A. In the event that supplemental pay is issued to an individual in error, the Department of Public Safety will recover the funds from the municipality because they would have authorized the erroneous payment by signing and returning the warrant with that individual's name still on the warrant. Extreme care should be taken in ascertaining each individual's eligibility for the next month before signing the warrant.

AUTHORITY NOTE: Promulgated in accordance with R.S. 33:2218.7 et seq.

HISTORICAL NOTE: Promulgated by the Department of Public Safety and Corrections, LR 13:247 (April 1987).

§107. How to Indicate Changes

A. An employee's payroll record can be changed by indicating such changes on the warrant. It is advisable to use a bright color of ink when making changes. Please do not obliterate the information already on the warrant—simply write the change directly above or beside the information you wish to change. Also, draw one line through the old information. See "Sample Warrant" (§2013) for a typical change of address.

AUTHORITY NOTE: Promulgated in accordance with R.S. 33:2218.7 et seq.

HISTORICAL NOTE: Promulgated by the Department of Public Safety and Corrections, LR 13:247 (April 1987).

§109. Due Date

A. The signed warrants are due in the Department of Public Safety by the tenth of the month. For example, warrants listing checks dated 02-28-85 are due on 03-10-85. It is important that warrants be returned by the due date to insure that all changes are made and the funds to pay each department are on hand when the payroll checks are issued. If the warrants are not received by the issue date of the checks, the checks will be held in the office of the Department of Public Safety until said warrants are received.

AUTHORITY NOTE: Promulgated in accordance with R.S. 33:2218.7 et seq.

HISTORICAL NOTE: Promulgated by the Department of Public Safety and Corrections, LR 13:247 (April 1987).

Chapter 3. Applications

§301. Required Supportive Documentation

A. All applications must be notarized. For a department covered under Municipal Fire and Police Civil Service, attach a copy of the employee's Personnel Action Form. For a department not covered under Municipal Fire and Police Civil Service, attach a signed copy of the town meeting minutes disclosing the hire date, duties, and the monthly salary of the employee. A chief of police and deputy constable must send a copy of their commission from Jim Brown's office.

AUTHORITY NOTE: Promulgated in accordance with R.S. 33:2218.7 et seq.

HISTORICAL NOTE: Promulgated by the Department of Public Safety and Corrections, LR 13:247 (April 1987).

§303. Prior Service

A. Applicants are allowed credit for previous full-time service with Louisiana police departments and/or sheriff offices, provided the applicant met all supplemental pay requirements during that prior period. When submitting an application for an employee who has prior police service, attach a completed Certificate of Prior Service from each department with which the applicant has been employed. See sample Certificate of Prior Service. It is the police department's responsibility to correspond with the other police departments which have employed a particular employee in order to obtain Certificates of Prior Service from those departments and submit all necessary forms with the application.

AUTHORITY NOTE: Promulgated in accordance with R.S. 33:2218.7 et seq.

HISTORICAL NOTE: Promulgated by the Department of Public Safety and Corrections, LR 13:247 (April 1987).

§305. POST Certification

A. Applicants must be POST certified. Submit a copy of POST Certificate (§2011).

AUTHORITY NOTE: Promulgated in accordance with R.S. 33:2218.7 et seq.
HISTORICAL NOTE: Promulgated by the Department of Public Safety and Corrections, LR 13:247 (April 1987).

§307. When to Submit Applications to D.P.S.

A. As covered in §905, new employees must wait one year before beginning to draw supplemental pay. The application(s) must be submitted within 60 days of the end of this waiting period. In cases where applications are submitted late, back pay may be involved. See §913 for information on "Back Pay".

AUTHORITY NOTE: Promulgated in accordance with R.S. 33:2218.7 et seq.
HISTORICAL NOTE: Promulgated by the Department of Public Safety and Corrections, LR 13:247 (April 1987).

Chapter 5. Change in Status

§501. When to Notify D.P.S. of Changes in Status

A. Notification of a change in employee status must be received within 15 days of the effective date of the change. These changes may be indicated on the warrant if time permits (warrants are due on the tenth). Otherwise a letter of notification is required. For example, if John Doe quits work on the eleventh (after the warrant has been returned to Public Safety), it will be too late to notify Public Safety on the next warrant. In cases such as this, a letter should be sent immediately.

AUTHORITY NOTE: Promulgated in accordance with R.S. 33:2218.7 et seq.
HISTORICAL NOTE: Promulgated by the Department of Public Safety and Corrections, LR 13:247 (April 1987).

§503. Resignations

A. Notification by Warrant. Draw one line through the employee's name and write the resignation date beside the name or under the Social Security number. See "Sample Warrant" (§2013).

B. Notification by Letter. The letter should state the employee's name, Social Security number, and the resignation date. If applicable, the Civil Service Personnel Action form should be attached to the letter.

C. Definition

Resignation Date—the last day that the police department pays the employee. For example, Ted Ticketwriter turned in his two-week notice on March 6 and took some paid leave he was entitled to for the remaining two weeks of his employment. His resignation was effective on March 20; he received his final regular paycheck on March 23. The correct resignation date as far as supplemental pay is concerned is March 20 because that is the last day that the employee was paid by the municipality.

AUTHORITY NOTE: Promulgated in accordance with R.S. 33:2218.7 et seq.
HISTORICAL NOTE: Promulgated by the Department of Public Safety and Corrections, LR 13:247 (April 1987).

§505. Suspensions

A. Notification by Warrant. Draw one line through the employee's name and write the suspension date beside the name or under the Social Security number. See "Sample Warrant" (§2013).

B. Notification by Letter. The letter should state the employee's name, Social Security number, and the effective date of the suspension. If applicable, the Civil Service Personnel Action form should be attached to the letter.

AUTHORITY NOTE: Promulgated in accordance with R.S. 33:2218.7 et seq.
HISTORICAL NOTE: Promulgated by the Department of Public Safety and Corrections, LR 13:247 (April 1987).

§507. Leave without Pay (L.W.O.P.)

A. L.W.O.P. is treated the same as a resignation in the supplemental pay system. See §503 for information on how to notify the Department of Public Safety when an employee resigns.

AUTHORITY NOTE: Promulgated in accordance with R.S. 33:2218.7 et seq.
HISTORICAL NOTE: Promulgated by the Department of Public Safety and Corrections, LR 13:247 (April 1987).

§509. Change in Duties

A. Changes in duties should not be indicated on the warrant. Instead, a letter stating the employee's name, Social Security number, and a brief explanation of the change in the employee's duties should be submitted to Public Safety.

B. Definition

Duties—the tasks which comprise the majority of what an employee is required to do while on the job.

AUTHORITY NOTE: Promulgated in accordance with R.S. 33:2218.7 et seq.
HISTORICAL NOTE: Promulgated by the Department of Public Safety and Corrections, LR 13:247 (April 1987).

§511. Change in Classification/Title

A. As with changes in duties, a letter is required. Where applicable, the Civil Service Personnel Action form should be attached to the letter. The letter should state the employee's name, Social Security number, nature of the change, and the effective date of the change.

AUTHORITY NOTE: Promulgated in accordance with R.S. 33:2218.7 et seq.
HISTORICAL NOTE: Promulgated by the Department of Public Safety and Corrections, LR 13:247 (April 1987).

§513. Workmen's Compensation

A. An employee who receives Workmen's Comp benefits is not eligible for police supplemental pay for the duration of the time he/she is receiving Comp benefits. Notification must be in the form of a letter stating the employee's name, Social Security number, and the date the employee began receiving Comp benefits. For example, Peter Patrolman was injured on the job on February 10. On March 7 he received

his first Workmen's Comp check. The Comp benefit was declared to be retroactive to the date of injury, so the employee went on Workmen's Comp on February 10.

AUTHORITY NOTE: Promulgated in accordance with R.S. 33:2218.7 et seq.
HISTORICAL NOTE: Promulgated by the Department of Public Safety and Corrections, LR 13:247 (April 1987).

§515. Death

A. In the event of an employee death, written notification must be received within 15 days. If the employee was due any supplemental pay, the check will be payable to his estate. Please return any supplemental checks made payable to an employee who is deceased.

AUTHORITY NOTE: Promulgated in accordance with R.S. 33:2218.7 et seq.
HISTORICAL NOTE: Promulgated by the Department of Public Safety and Corrections, LR 13:247 (April 1987).

Chapter 7. Reinstatements

§701. Reinstatement from Suspension

A. When an employee returns to work from a suspension, please submit a Civil Service Personnel Action form showing the suspension date and the date of return. For police departments not under Civil Service, a letter stating the employee's name, Social Security number, the suspension date, and the date of return is required.

AUTHORITY NOTE: Promulgated in accordance with R.S. 33:2218.7 et seq.
HISTORICAL NOTE: Promulgated by the Department of Public Safety and Corrections, LR 13:247 (April 1987).

§703. Reinstatement from Resignation

A. When an employee resigns and later returns to work, a new application must be submitted with a Certificate of Prior Service. See §§301-305 for information on "Applications".

AUTHORITY NOTE: Promulgated in accordance with R.S. 33:2218.7 et seq.
HISTORICAL NOTE: Promulgated by the Department of Public Safety and Corrections, LR 13:247 (April 1987).

§705. Reinstatement from Workmen's Comp

A. When an employee returns to work after drawing Workmen's Comp, a letter must be sent to the Department of Public Safety to reinstate the employee on the supplemental payroll. The letter should state the employee's name and Social Security number, and a brief recap of the period for which the employee was receiving Comp benefits. See §513 for information on effective date of Workmen's Comp. The date the employee returns is the date that the municipality resumes payment of his full salary, which may not necessarily be his first day back to work. For example, Peter Patrolman was put back on the police department work schedule effective March 15. His first day to actually work is March 17, but he will be paid for the entire week beginning March 15. His reinstatement date will be March 15.

AUTHORITY NOTE: Promulgated in accordance with R.S. 33:2218.7 et seq.
HISTORICAL NOTE: Promulgated by the Department of Public Safety and Corrections, LR 13:247 (April 1987).

§707. Reinstatement from L.W.O.P.

A. Same as "Resignation". See §703 for information.

AUTHORITY NOTE: Promulgated in accordance with R.S. 33:2218.7 et seq.
HISTORICAL NOTE: Promulgated by the Department of Public Safety and Corrections, LR 13:247 (April 1987).

Chapter 9. Payroll Information

§901. Eligibility Requirements for Supplemental Pay

A. The eligibility requirements for supplemental pay are:

1. the employee must work full time; a minimum of 40 hours per week performing his police duties;

2. he must be POST certified, receive at least minimum wages and be a commissioned officer duly empowered to make arrests;

3. the employee must be paid solely from municipal funds;

4. the employee must be POST certified.

B. Civil Service classifications routinely approved by the Board of Review are: police officer, police sergeant, police captain, assistant police chief, and police chief.

AUTHORITY NOTE: Promulgated in accordance with R.S. 33:2218.7 et seq.
HISTORICAL NOTE: Promulgated by the Department of Public Safety and Corrections, LR 13:247 (April 1987).

§903. Board Approval of Applications

A. All applications for supplemental pay are subject to board approval. Applicants whose job duties and/or classifications are among those the board routinely approves are placed on the payroll in the appropriate month prior to board approval. The board meets periodically and approves these routine additions to the payroll for the period just ended. Applicants whose duties and/or classifications are not among those routinely approved or applications with questionable information are put before the board for an eligibility ruling.

B. Decisions of the board are final as per R.S. 33:2218.7. The employee does have the right to appeal a board decision. Written notice of intent to appeal the board's decision must be submitted to the secretary of the board, and the appeal will be included on the next regular meeting agenda. The board also decides back pay cases on an individual basis.

AUTHORITY NOTE: Promulgated in accordance with R.S. 33:2218.7 et seq.
HISTORICAL NOTE: Promulgated by the Department of Public Safety and Corrections, LR 13:247 (April 1987).

§905. Waiting Period for New Employees

A. There is a full one-year waiting period for new employees. This includes employees who have been reclassified and are eligible under their new classifications, but were not eligible under their old classifications. The one-

year waiting period must begin on the first day of the month. The following examples are provided to illustrate computation of dates of first supplemental checks.

Employment Date	Add One Year	Next First	First Check Date
04-13-86	04-13-87	05-01-87	05-31-87
05-01-86	05-01-87	05-01-87	05-31-87
05-02-86	05-02-87	06-01-87	06-30-87
06-01-86	06-01-87	06-01-87	06-30-87

NOTE: If an employee ends his employment with the police department before his first check is issued, the police department must notify the Department of Public Safety within 15 days just like any other change in status. See Chapter 5 for information on status changes.

AUTHORITY NOTE: Promulgated in accordance with R.S. 33:2218.7 et seq.

HISTORICAL NOTE: Promulgated by the Department of Public Safety and Corrections, LR 13:247 (April 1987).

§907. Step Increases

A. The supplemental pay scale is as follows.

Period of Service	Supplemental Pay Rate
1 Year	$174
3 Years	$229
6 Years	$260

NOTE: Monthly payments are based upon full appropriation for that fiscal year. If funds are not appropriated, the pay scale will be decreased.

B. The step increases are done automatically by computer. It is not necessary to notify the Department of Public Safety when an employee is due a step increase. However the department should be notified when the police department feels that the employee should have gotten an increase but did not. This sometimes occurs when there is a discrepancy in an employee's pay record as far as prior service is concerned.

AUTHORITY NOTE: Promulgated in accordance with R.S. 33:2218.7 et seq.

HISTORICAL NOTE: Promulgated by the Department of Public Safety and Corrections, LR 13:247 (April 1987).

§909. Cut Off Date for Raises

A. The cut-off date for step increases is the twentieth of the month. See sample computations below.

Employment Date	1 Year Service Date	Raise on Check Dated
02-03-84	02-03-85	02-28-85
02-20-84	02-20-85	02-28-85
02-21-84	02-21-85	03-31-85

AUTHORITY NOTE: Promulgated in accordance with R.S. 33:2218.7 et seq.

HISTORICAL NOTE: Promulgated by the Department of Public Safety and Corrections, LR 13:247 (April 1987).

§911. Cut-Off Date for Eligibility for that Month's Check

A. The cut-off date for eligibility for a particular check is the sixteenth of the month for which the check is dated. If an employee was on the police department payroll through and including the sixteenth, he is eligible for the entire check. If an employee is on the police department payroll through and including the fifteenth, he is eligible for one half of his regular supplemental check. He is not eligible for any supplemental pay for less than 15 days' service in a given month. See examples below.

Termination Date	Regular Pay	Amount Eligible For/Check Dated
02-10-85	$260	$ 0 / 02-28-85
02-15-85	$260	$130 / 02-28-85
02-16-85	$260	$260 / 02-28-85
02-22-85	$260	$260 / 02-28-85

NOTE: It is the responsibility of the police department to ascertain that each employee is eligible for a particular supplemental check before allowing that check to be released to the employee. If an employee's status changes before the sixteenth of the month and notification is not received by the Department of Public Safety before the checks for that month are issued, please return the check to the Department of Public Safety.

AUTHORITY NOTE: Promulgated in accordance with R.S. 33:2218.7 et seq.

HISTORICAL NOTE: Promulgated by the Department of Public Safety and Corrections, LR 13:247 (April 1987).

§913. Back Pay Policy

A. Because the Department of Public Safety's fiscal year ends on June 30, back supplemental pay cannot be paid beyond July without legislative approval. The Board of Review must approve all back supplemental pay, whether or not it extends beyond the current fiscal year.

1. Back Pay in Current Fiscal Year. The board routinely approves back pay in full from current year funds for which the employee is found eligible. This amount will be added to the employee's regular supplemental pay amount on the next regular payroll after board approval.

2. Back Pay Extending Beyond Current Fiscal Year. By Act 110 of the 1982 Legislature, after board approval, applications for back pay extending beyond current fiscal year must be submitted to the Legislative Budget Committee for final approval before payment can be made to the individual.

NOTE: The board feels that it is the police department's responsibility to submit all necessary forms in time for an employee to begin receiving supplemental pay when he becomes eligible. If the police department is negligent and submits the application late for no apparent reason, then the police department should compensate the employee for any back pay the board denies.

AUTHORITY NOTE: Promulgated in accordance with R.S. 33:2218.7 et seq.

HISTORICAL NOTE: Promulgated by the Department of Public Safety and Corrections, LR 13:247 (April 1987).

§915. Stop Payments

A. When an employee reports a lost, damaged, or stolen supplemental check, the police department should notify the Department of Public Safety immediately. The Department of Public Safety will place a stop payment on the check. If the check has already cleared the bank, a copy of both sides will be sent to the police department for the employee's

records and no duplicate will be issued. If the stop payment is accepted, the employee will be double paid on the next regular payroll. No duplicate checks will be issued. If the check is found before the next regular payroll check is issued, it should be returned to the Department of Public Safety.

AUTHORITY NOTE: Promulgated in accordance with R.S. 33:2218.7 et seq.

HISTORICAL NOTE: Promulgated by the Department of Public Safety and Corrections, LR 13:247 (April 1987).

§917. Duplicate W-2's

A. The Department of Public Safety will issue duplicate W-2's for any calendar year requested. Duplicate W-2's should be requested by the police department.

AUTHORITY NOTE: Promulgated in accordance with R.S. 33:2218.7 et seq.

HISTORICAL NOTE: Promulgated by the Department of Public Safety and Corrections, LR 13:247 (April 1987).

§919. Correspondence

A. All correspondence to the Department of Public Safety should come from the police department, not the individual employee. In all correspondence, please include the employee name, Social Security number, and the name, address, and telephone number of the police department. Address all correspondence to:

Louisiana Department of Public Safety and Corrections
Municipal Police Officers Supplemental Pay
Post Office Box 66909
Baton Rouge, LA 70896-6909

AUTHORITY NOTE: Promulgated in accordance with R.S. 33:2218.7 et seq.

HISTORICAL NOTE: Promulgated by the Department of Public Safety and Corrections, LR 13:247 (April 1987).

Chapter 20. Sample Forms

§2001. Sample Application with Prior Service—Civil Service

LOUISIANA DEPARTMENT OF PUBLIC SAFETY AND CORRECTIONS

MUNICIPAL POLICE OFFICER'S SUPPLEMENTAL PAY

R.S. 33:2218.1, et. seq., Act 49 of 1959

INFORMATION REQUEST FOR NEW EMPLOYEES

LOUISIANA DEPARTMENT OF PUBLIC SAFETY AND CORRECTIONS
P.O. BOX 66909
BATON ROUGE, LA 70896-6909

ATTN.: MUNICIPAL POLICE OFFICER'S SUPPLEMENTAL PAY

CITY OR POLICE DEPARTMENT: Anytown Police Department	EMPLOYEE NAME: Peter Patrolman
STREET ADDRESS OR P.O. BOX: 123 Main Street	STREET ADDRESS OR P.O. BOX: 256 Fourth Street
CITY: Anytown STATE: La ZIP: 70000	CITY: Anytown, STATE: La ZIP: 70000
CITY TELEPHONE NO.: (A.C. 504) 293-9999	SOCIAL SECURITY NO.: 999-99-9999

EMPLOYMENT DATE	IS EMPLOYMENT FULL TIME?	NO. OF HOURS WORKED PER WEEK	MONTHLY SALARY
January 23, 1985	☒ Yes ☐ No	50 ☒ 40 HOURS OR MORE ☐ LESS THAN 40 HOURS	$ 1,000.00

IF YOU ARE NOT EMPLOYED FULL TIME OR IF YOU WORK LESS THAN 40 HOURS, YOU ARE NOT ELIGIBLE FOR SUPPLEMENTAL PAY.

DOES EMPLOYEE BELONG TO MUNICIPAL FIRE AND POLICE CIVIL SERVICE? ☒ Yes ☐ No	IF YES, ATTACH A COPY OF PERSONNEL ACTION FORM. IF NO, ATTACH A COPY OF THE TOWN COUNCIL MEETING. LIST DUTIES.
HAS EMPLOYEE BEEN POST CERTIFIED? ☒ Yes ☐ No	IF YES, ATTACH COPY OF CERTIFICATION. IF NO, GIVE AN EXPLANATION IN "REMARKS" SECTION.
IS EMPLOYEE A DEPUTY MARSHAL? ☐ Yes ☐ No	IF ANSWER "YES" TO PREVIOUS QUESTION, ATTACH COPY OF COMMISSION.
IS EMPLOYEE PAID SOLELY FROM MUNICIPAL FUNDS? ☒ Yes ☐ No	

PREVIOUS LAW ENFORCEMENT SERVICE (Attach prior service forms)	DATES OF PREVIOUS EMPLOYMENT
Anothertown Police Department	02-20-82 - 06-27-83

We hereby certify that the person named in this application is a full-time commissioned police person of the above named police department, paid minimum wage from municipal funds and is entitled to supplemental pay in accordance with Act 49 of the 1959 legislature.

	NOTARY	DATE
EMPLOYEE SIGNATURE: Peter Patrolman	N. Notary	February 20, 1985
MAYOR'S SIGNATURE: A. Anymayor	N. Notary	February 20, 1985
CHIEF OF POLICE'S SIGNATURE: S. Somechief	N. Notary	February 20, 1985

REMARKS:

"To knowingly submit false information could constitute a criminal offense, such as, false swearing, falsification of public document or theft by fraud. Furthermore, negligent submission of erroneous information may subject such negligent person to personal liability for any resulting overpayment of supplemental pay."

AUTHORITY NOTE: Promulgated in accordance with R.S. 33:2218.7 et seq.

HISTORICAL NOTE: Promulgated by the Department of Public Safety and Corrections, Public Safety Services, LR 13:247 (April 1987).

§2003. Sample Civil Service Personnel Action Form

TO THE MUNICIPAL FIRE AND POLICE CIVIL SERVICE BOARD

ANYTOWN, Louisiana

PERSONNEL ACTION

Date JANUARY 25, 1985

1. Employee's Name	2. Department	3. Personnel Action (See Reverse Side for Designation)	4. Effective Date of Action
PETER PATROLMAN Date of Birth 04/03/56 Social Security No. 999-99-9999	POLICE	PROBATIONAL APPOINTMENT	JANUARY 23, 1985

5. From (Class Title)	6. To (Class Title)	7. (Monthly Salary)
	POLICE OFFICER	$1,000.00

8. Remarks Employee has passed exam and is to begin his working test period.

Recommended:

1. S. Somechief, Chief

2. S. Somechief, Supervisor

Approved:

John Doe, Chairman
Municipal Fire and Police Civil Service Board
John Doe III

Approved:

A. Anymayor
Appointing Authority
A. Anymayor

(Over)

CHAIRMAN OF THE BOARD

AUTHORITY NOTE: Promulgated in accordance with R.S. 33:2218.7 et seq.

HISTORICAL NOTE: Promulgated by the Department of Public Safety and Corrections, Public Safety Services, LR 13:247 (April 1987).

§2005. Sample Certificate of Prior Police Service

LOUISIANA DEPARTMENT OF PUBLIC SAFETY AND CORRECTIONS

MUNICIPAL POLICE OFFICERS' SUPPLEMENTAL PAY

33:2218.1 et. seq., Act 49 of 1959

CERTIFICATE OF PRIOR SERVICE

LOUISIANA DEPARTMENT OF PUBLIC SAFETY
AND CORRECTIONS
P.O. BOX 66909
BATON ROUGE, LA 70896-6909
ATTN.: MUNICIPAL POLICE OFFICER'S SUPPLEMENTAL PAY

CITY OR POLICE DEPARTMENT Anothertown Police Department	NAME Peter Patrolman
Post Office Box 111	ADDRESS 128 Another Avenue
Anothertown, La 70000	CITY Anothertown, La ZIP 70000
	SOCIAL SECURITY NO.

DATES OF EMPLOYMENT	FROM 02-20-82	TO 06-27-83	CLASSIFICATION Police Officer

DUTIES
General Law Enforcement

SALARY $875.00	NO. OF HOURS WORKED PER WEEK 50	I HEREBY CERTIFY THAT THE PERSON NAMED IN THIS APPLICATION WAS A PAID FULL-TIME EMPLOYEE OF THIS DEPARTMENT.
MAYOR	T. Thismayor	TITLE Mayor
POLICE CHIEF	A. Anotherchief	DATE February 12, 1985
NOTARY	S. Somenotary	DATE February 12, 1985

REMARKS

DPSMF 1334 (R 12/85)

AUTHORITY NOTE: Promulgated in accordance with R.S. 33:2218.7 et seq.

HISTORICAL NOTE: Promulgated by the Department of Public Safety and Corrections, Public Safety Services, LR 13:247 (April 1987).

§2007. Sample Certificate of Prior Sheriff Service

LOUISIANA DEPARTMENT OF PUBLIC SAFETY AND CORRECTIONS

MUNICIPAL POLICE OFFICERS' SUPPLEMENTAL PAY

33:2218.1 et. seq., Act 49 of 1959

CERTIFICATE OF PRIOR SERVICE

LOUISIANA DEPARTMENT OF PUBLIC SAFETY
AND CORRECTIONS
P.O. BOX 66909
BATON ROUGE, LA 70896-6909
ATTN.: MUNICIPAL POLICE OFFICER'S SUPPLEMENTAL PAY

CITY OR POLICE DEPARTMENT Any Parish Sheriff Office	NAME John D. Doe, Jr.
100 Main Street	ADDRESS 222 North 6th Street
Sometown, La 70000	CITY Sometown, La ZIP 70000
	SOCIAL SECURITY NO. 999-99-9999

DATES OF EMPLOYMENT	FROM 01-01-76	TO 12-22-78	CLASSIFICATION Deputy Sheriff

DUTIES
Enforce State Laws and Parish Ordinances

SALARY $700.00	NO. OF HOURS WORKED PER WEEK 50	I HEREBY CERTIFY THAT THE PERSON NAMED IN THIS APPLICATION WAS A PAID FULL-TIME EMPLOYEE OF THIS DEPARTMENT.

MAYOR	T. Thatsheriff	TITLE March 23, 1980
POLICE CHIEF	T. Thisnotary	DATE March 23, 1980
NOTARY		DATE

REMARKS

DPSMF 1334 (R 12/85)

AUTHORITY NOTE: Promulgated in accordance with R.S. 33:2218.7 et seq.

HISTORICAL NOTE: Promulgated by the Department of Public Safety and Corrections, Public Safety Services, LR 13:247 (April 1987).

§2009. Sample Application—Non-Civil Service

LOUISIANA DEPARTMENT OF PUBLIC SAFETY AND CORRECTIONS

MUNICIPAL POLICE OFFICER'S SUPPLEMENTAL PAY

R.S. 33:2218.1, et. seq., Act 49 of 1959

INFORMATION REQUEST FOR NEW EMPLOYEES

LOUISIANA DEPARTMENT OF PUBLIC SAFETY AND CORRECTIONS
P.O. BOX 66909
BATON ROUGE, LA 70896-6909

ATTN.: MUNICIPAL POLICE OFFICER'S SUPPLEMENTAL PAY

CITY OR POLICE DEPARTMENT: Hometown Police Department	EMPLOYEE NAME: Ted Ticketwriter
STREET ADDRESS OR P.O. BOX: 200 South Main Street	STREET ADDRESS OR P.O. BOX: 200 South Main Street
CITY: Hometown, STATE: La ZIP: 70000	CITY: Hometown, STATE: La ZIP: 70000
CITY TELEPHONE NO.: (A.C. 504) 295-9999	SOCIAL SECURITY NO.: 999-99-9999

EMPLOYMENT DATE	IS EMPLOYMENT FULL TIME?	NO. OF HOURS WORKED PER WEEK	MONTHLY SALARY
March 12, 1985	☒ Yes ☐ No	50 ☒ 40 HOURS OR MORE ☐ LESS THAN 40 HOURS	$ 900.00

IF YOU ARE NOT EMPLOYED FULL TIME OR IF YOU WORK LESS THAN 40 HOURS, YOU ARE NOT ELIGIBLE FOR SUPPLEMENTAL PAY.

DOES EMPLOYEE BELONG TO MUNICIPAL FIRE AND POLICE CIVIL SERVICE?	☐ Yes ☒ No	IF YES, ATTACH A COPY OF PERSONNEL ACTION FORM. IF NO, ATTACH A COPY OF THE TOWN COUNCIL MEETING. LIST DUTIES.
HAS EMPLOYEE BEEN POST CERTIFIED?	☐ Yes ☐ No	IF YES, ATTACH COPY OF CERTIFICATION. IF NO, GIVE AN EXPLANATION IN "REMARKS" SECTION.
IS EMPLOYEE A DEPUTY MARSHAL? ☐ Yes ☐ No	IF ANSWER "YES" TO PREVIOUS QUESTION, ATTACH COPY OF COMMISSION.	IS EMPLOYEE PAID SOLELY FROM MUNICIPAL FUNDS? ☒ Yes ☐ No

PREVIOUS LAW ENFORCEMENT SERVICE (Attach prior service forms)	DATES OF PREVIOUS EMPLOYMENT

We hereby certify that the person named in this application is a full-time commissioned police person of the above named police department, paid minimum wage from municipal funds and is entitled to supplemental pay in accordance with Act 49 of the 1959 legislature.

EMPLOYEE SIGNATURE: Ted Ticketwriter	NOTARY: N. Notary	DATE: April 20, 1985
MAYOR'S SIGNATURE: N. Nicemayor	NOTARY: N. Notary	DATE: April 20, 1985
CHIEF OF POLICE'S SIGNATURE: G. Goodchief	NOTARY: N. Notary	DATE: April 20, 1985

REMARKS:

"To knowingly submit false information could constitute a criminal offense, such as, false swearing, falsification of public document or theft by fraud. Furthermore, negligent submission of erroneous information may subject such negligent person to personal liability for any resulting overpayment of supplemental pay."

AUTHORITY NOTE: Promulgated in accordance with R.S. 33:2218.7 et seq.

HISTORICAL NOTE: Promulgated by the Department of Public Safety and Corrections, Public Safety Services, LR 13:247 (April 1987).

§2011. Sample POST Certificate

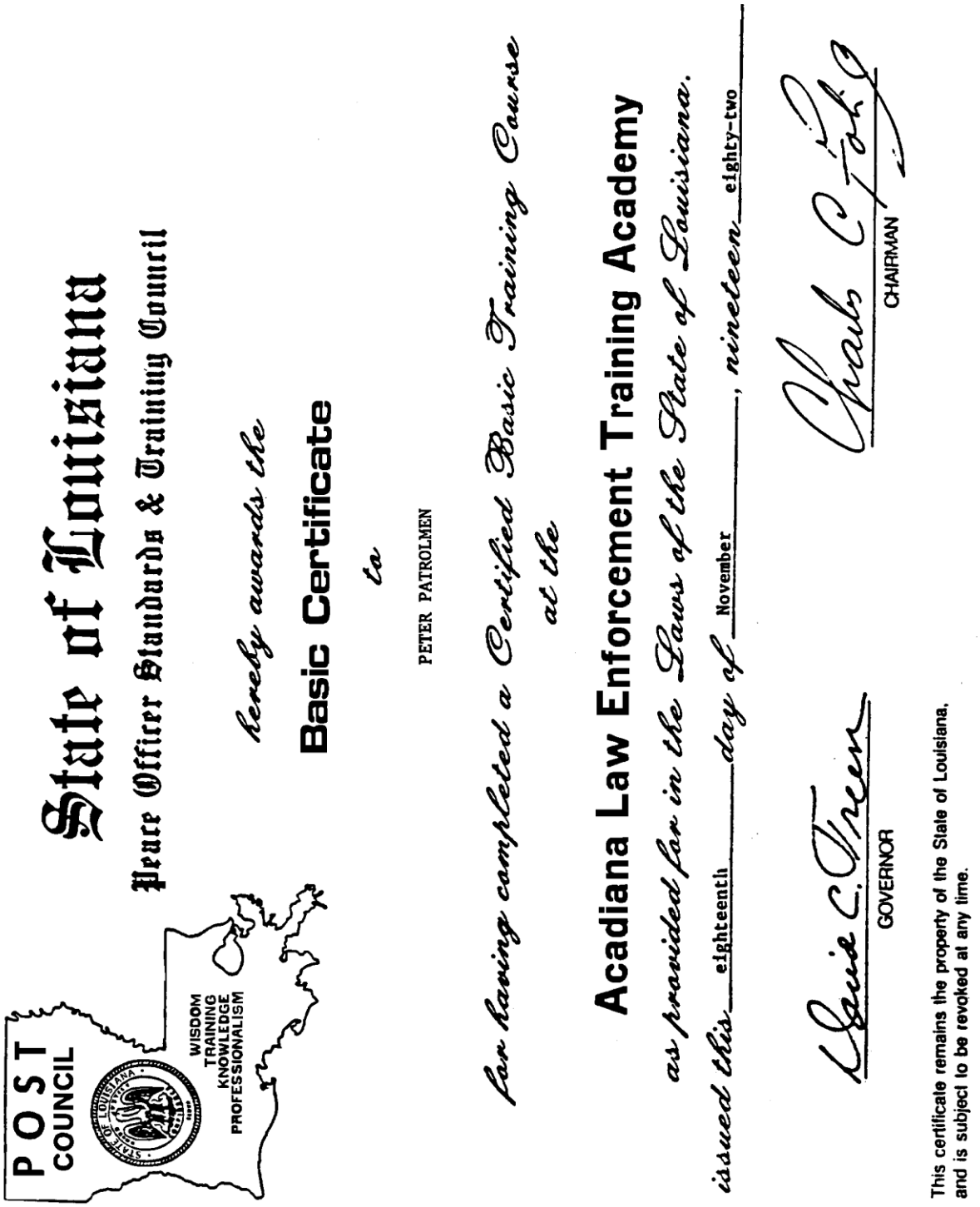

AUTHORITY NOTE: Promulgated in accordance with R.S. 33:2218.7 et seq.

HISTORICAL NOTE: Promulgated by the Department of Public Safety and Corrections, Public Safety Services, LR 13:247 (April 1987).

§2013. Sample Warrant

SPRO20MPA
PAGE 000

MARSHAL/POLICE SUPPLEMENTAL PAY
STATE OF LOUISIANA-DEPARTMENT OF PUBLIC SAFETY
P.O. BOX 66909 BATON ROUGE, LA 70896

WARRANT: THIS BEING A CERTIFIED LIST OF MUNICIPAL POLICE OFFICERS ENTITLED TO SUPPLEMENTAL PAY IN ACCORDANCE WITH LA. R.S. 33 2218.1-2218.7 ET SEQ.

CITY OR TOWN OF: ANYTOWN
TOWN CODE: 9999

NAME ADDRESS	SOC-SEC-NUM ADDRESS-2	CITY	DATE EMPLO STATE ZIP	YRS SER	AMOUNT TO BE PAID	CHECK DATE MO	DA	YR	CHECK NUMBER
DOE JOHN ~~123 MAIN ST~~ 246 S. 6th ST.	999-99-9999	ANYTOWN	01 01 84 LA 000070700	01	$197.00	05	31	85	00000
~~DOE JOHN~~ 123 MAIN ST Resigned 05-30-85	999-99-9999	ANYTOWN	01 01 84 LA 000070700	01	$197.00	05	31	85	00000
DOE JOHN 123 MAIN ST	999-99-9999	ANYTOWN	01 01 84 LA 000070700	01	$197.00	05	31	85	00000
DOE JOHN 123 MAIN ST	999-99-9999	ANYTOWN	01 01 84 LA 000070700	01	$197.00	05	31	85	00000
~~DOE JOHN~~ 123 MAIN ST SUSPENDED 06-01-85	999-99-9999	ANYTOWN	01 01 84 LA 000070700	01	$197.00	05	31	85	00000

SPR020MPA
PAGE 000

MARSHAL/POLICE SUPPLEMENTAL PAY
STATE OF LOUISIANA-DEPARTMENT OF PUBLIC SAFETY
P.O. BOX 66909 BATON ROUGE, LA 70896

WARRANT: THIS BEING A CERTIFIED LIST OF MUNICIPAL POLICE OFFICERS ENTITLED TO SUPPLEMENTAL PAY IN ACCORDANCE WITH LA. R.S. 33 2218.1-2218.7 ET SEQ.

CITY OR TOWN OF: ANYTOWN
TOWN CODE: 9999

NAME ADDRESS	SOC-SEC-NUM ADDRESS-2	CITY	DATE EMPLO STATE ZIP	YRS SER	AMOUNT TO BE PAID	CHECK DATE MO DA YR	CHECK NUMBER
POLICE	5			CITY TOTAL =	$985.00		1

APPROVED BY A. Anymayor
APPROVING OFFICER'S SIGNATURE

A. ANYMAYOR — MAYOR
NAME — TITLE

CERTIFIED BY S. Somechief
CERTIFYING OFFICER'S SIGNATURE

S. SOMECHIEF — CHIEF
NAME — TITLE

ONE COMPLETE COPY OF THIS WARRANT IS TO BE CORRECTED, SIGNED, AND RETURNED BY THE 10TH OF EACH MONTH.

*** NOTE *** ANY QUESTIONS PLEASE CONTACT DOT MILAM AT 504-925-6042 *** NOTE ***

AUTHORITY NOTE: Promulgated in accordance with R.S. 33:2218.7 et seq.

HISTORICAL NOTE: Promulgated by the Department of Public Safety and Corrections, Public Safety Services, LR 13:247 (April 1987).

Title 55
PUBLIC SAFETY
Part XIX. Deputy Sheriffs' Supplemental Pay

Chapter 1. General Provisions

§101. Supplemental Pay Requirements and Board Operations

A. "The Sheriff's Guide to Departmental Policies and Statutory Specifications for the Administration of the Supplemental Pay Program" is hereby identified as the official guide to the administration of the Deputy Sheriffs' Supplemental Pay Program. Revisions to "The Sheriff's Guide" shall be approved by the Board of Review.

B. In the event a question of legality arises, an Attorney General's Opinion will be requested by the Board of Review as a body and not by an individual member of the board.

C. Individuals employed by police juries as correctional officers cannot receive supplemental pay as "de facto" deputy sheriffs. Based on Attorney Generals Opinion 80-454.

D. The board shall have bi-annual regular meetings each fiscal year, and the chairman may call additional regular meetings, as required. The meetings will be held in the Office of the State Register.

E. The board shall have semiannual regular meetings each fiscal year, and the chairman may call additional regular meetings, as required. The meetings will be held in the office of the state treasurer.

AUTHORITY NOTE: Promulgated in accordance with R.S. 33:2218.8.

HISTORICAL NOTE: Promulgated by the Department of Treasury, Board of Review of Deputy Sheriffs' Supplemental Pay, LR 6:517 (August 1980), amended LR 24:1518 (August 1998).

Title 55
PUBLIC SAFETY
Part XXI. Homeland Security and Emergency Preparedness

Chapter 1. General Provisions

§101. Overview

A. Act 35 of the First Extraordinary Session of 2006, effective on March 1, 2006, established the Governor's Office of Homeland Security and Emergency Preparedness in R.S. 29:725.

B. Revised Statutes 29:727(E)(13) added by Act 36 of the First Extraordinary Session of 2006, effective February 23, 2006, requires the Office of Homeland Security and Emergency Preparedness, prior to May 31, 2006 to promulgate standards and regulations in accordance with the Administrative Procedure Act for local governments when a mandatory evacuation has been ordered in response to a weather event or disaster, of people located in high risk areas utilizing all available modes of transportation, including but not limited to local school and municipal buses, government-owned vehicles, vehicles provided by volunteer agencies, and trains and ships to public shelters located outside of the high risk area with priority consideration being given to the special needs of the following classes of people:

1. people with specific special needs such as the elderly and the infirm;

2. tourists;

3. those who refuse to leave;

4. those without personal transportation.

C. Revised Statutes 29:727(E)(14) added by Act 36 of the First Extraordinary Session of 2006, effective February 23, 2006, requires the Office of Homeland Security and Emergency Preparedness, prior to May 31, 2006 to promulgate standards and regulations in accordance with the Administrative Procedure Act for local governments when a mandatory evacuation has been ordered for the evacuation or safe housing of essential workers located in high risk areas.

AUTHORITY NOTE: Promulgated in accordance with R.S. 15:587.

HISTORICAL NOTE: Promulgated by the Office of the Governor, Office of Homeland Security and Emergency Preparedness, LR 33:646 (April 2007), amended LR 38:49 (January 2012).

§103. Goals and Objectives

A. The goals of these regulations are:

1. to protect citizens who cannot protect themselves when threatened or endangered by a weather event or disaster;

2. to reduce loss of life due to impediments to self-evacuation from a weather event or disaster;

3. to protect essential workers whose jobs require that they remain in harm's way before, during and after a weather event or disaster; and

4. to protect personal liberty while preserving law and order in areas evacuated due to the threat of a weather event or disaster.

B. The objectives of these regulations are:

1. to identify the population which lacks means to self-evacuate;

2. to identify and provide for the use of the nearest available transportation resources for use by local governments during mandatory evacuations;

3. to identify and provide means of protection for essential workers whose employment or commission requires that they remain in areas susceptible to damage and destruction wrought by weather events or disasters; and

4. to provide for establishment of rules by local government for citizens in high risk areas who refuse to leave when a mandatory evacuation is ordered.

AUTHORITY NOTE: Promulgated in accordance with R.S. 15:587.

HISTORICAL NOTE: Promulgated by the Office of the Governor, Office of Homeland Security and Emergency Preparedness, LR 33:646 (April 2007), LR 38:49 (January 2012).

§105. Definitions

At Risk Population—people who fall within the following non-exclusive categories:

1. those without means of personal transportation;

2. the infirm who are not living in a public or private health care facility;

3. nursing home residents;

4. private hospital patients;

5. other special needs who are not confined to a health care facility;

6. hotel and motel guests.

Contiguous Risk Area—any parish, not directly threatened by a weather event or disaster requiring the evacuation of some or all of its citizens, that can render assistance to a high risk area.

Essential Worker—persons working in public safety, government, disaster response, health care, or private business as designated and deemed necessary and/or critical for disaster response by their employer or by virtue of their official commission.

High Risk Area—any parish, directly threatened by a weather event or disaster requiring the evacuation of some or all of its citizens.

Local Government—a parish or municipality of the state of Louisiana.

AUTHORITY NOTE: Promulgated in accordance with R.S. 15:587.
HISTORICAL NOTE: Promulgated by the Office of the Governor, Office of Homeland Security and Emergency Preparedness, LR 33:646 (April 2007), amended LR 38:49 (January 2012).

Chapter 3. Risk Assessment

§301. Biennial Risk Assessment

A. Every parish and municipality shall perform a biennial risk assessment in the form and format prescribed by the Governor's Office of Homeland Security and Emergency Preparedness for the at-risk population with the results thereof to be provided to the Governor's Office of Homeland Security on or before December 1, 2006 and on or before that date every second year thereafter as prescribed by the Governor's Office of Homeland Security and Emergency Preparedness.

AUTHORITY NOTE: Promulgated in accordance with R.S. 15:587.
HISTORICAL NOTE: Promulgated by the Office of the Governor, Office of Homeland Security and Emergency Preparedness, LR 33:646 (April 2007), amended LR 38:49 (January 2012).

§303. Evacuating and Sheltering Private Nursing Home Residents

A. The evacuation and sheltering of private nursing home residents and private hospital patients is and shall remain the primary responsibility of the host health care facility.

AUTHORITY NOTE: Promulgated in accordance with R.S. 15:587.
HISTORICAL NOTE: Promulgated by the Office of the Governor, Office of Homeland Security and Emergency Preparedness, LR 33:646 (April 2007), amended LR 38:49 (January 2012).

§305. Municipal Risk Assessment

A. The municipal risk assessment shall consist of a survey of the people living within the corporate limits to identify the people in each category of the at-risk population defined herein and the essential workers as defined herein, and to determine whether the individuals so identified may need sheltering in a general population shelter or a special needs shelter as those terms are defined by the Louisiana Department of Health and Hospitals. To the greatest extent possible, the municipal risk assessment should be based upon reliable sources of information such as the most current U.S. Census data, historical seasonal tourism estimates, average population of hospital and nursing home residents, and numbers of anticipated essential workers responding to an incident. The results of the municipal survey shall be furnished to the parish Office of Homeland Security and Emergency Management established pursuant to R.S. 29:727(B).

AUTHORITY NOTE: Promulgated in accordance with R.S. 15:587.
HISTORICAL NOTE: Promulgated by the Office of the Governor, Office of Homeland Security and Emergency Preparedness, LR 33:646 (April 2007), amended LR 38:50 (January 2012).

§307. Parish Risk Assessment

A. The parish risk assessment shall consist of a survey of the people living outside the corporate limits of any municipality to identify the people in the each category of the at-risk population defined herein and the essential workers as defined herein, and to determine whether the individuals so identified may need sheltering in a general population shelter or a special needs shelter as those terms are defined by the Louisiana Department of Health and Hospitals.

B. To the greatest extent possible, the parish risk assessment should be based upon reliable sources of information such as the most current U.S. Census data, historical seasonal tourism estimates, average population of hospital and nursing home residents, and numbers of anticipated essential workers responding to an incident.

AUTHORITY NOTE: Promulgated in accordance with R.S. 15:587.
HISTORICAL NOTE: Promulgated by the Office of the Governor, Office of Homeland Security and Emergency Preparedness, LR 33:647 (April 2007), LR 38:50 (January 2012).

§309. Transportation

A. Every parish and municipality shall prepare an inventory in the form and format prescribed by the Governor's Office of Homeland Security and Emergency Preparedness of all local modes of transportation subject to the parish president's emergency powers, including but not limited to school and municipal buses, government-owned vehicles, vehicles expected to be provided by volunteer agencies, and trains or ships, for use in a mandatory evacuation. A copy of the municipal inventory shall be provided to the parish office of homeland security and emergency management established pursuant to R.S. 29:727(B). A copy of the combined parish and municipal inventory shall be submitted biennially beginning on or before December 1, 2006, and on or before that date in every second year thereafter to the Governor's Office of Homeland Security and Emergency Management as prescribed by the Governor's Office of Homeland Security and Emergency Preparedness.

AUTHORITY NOTE: Promulgated in accordance with R.S. 15:587.
HISTORICAL NOTE: Promulgated by the Office of the Governor, Office of Homeland Security and Emergency Preparedness, LR 33:647 (April 2007), amended LR 38:50 (January 2012).

§311. Evacuation and Sheltering Plan

A.1. The parish Office of Homeland Security and Emergency Management established pursuant to R.S.

29:727(B), using the combined list of at-risk population and essential workers and the combined list of available means of transportation, shall develop an evacuation and sheltering plan for each category of at-risk population to include at a minimum:

a. use of locally available, or non-local, means of transportation for evacuation of all categories of the at-risk population;

b. means of notification of the different categories of the at-risk population of a mandatory evacuation;

c. means of notification of the different categories of the at-risk population of available transportation;

d. determination of individuals and facilities where the risk of sheltering in place outweighs the risk of loss of life during the evacuation process;

e. coordination of transportation resources with a shelter destination outside of a high risk area;

f. provisions for medical emergencies which occur during the evacuation process;

g. plans and procedures to execute the evacuation and sheltering plan within 36 hours of declaration of a voluntary evacuation and within 12 hours of declaration of a mandatory evacuation.

2. The plan shall be submitted to GOHSEP on or before March 1, 2007 and updated in the form and format prescribed by the Governor's Office of Homeland Security and Emergency Preparedness in conjunction with the other biennial reports described in this Part.

B. The parish Office of Homeland Security and Emergency Management shall develop an evacuation and sheltering plan for essential workers which shall include, at a minimum, provisions for food, water, and shelter for at least 72 hours subsequent to a weather event or disaster.

C. Each parish and municipality shall prepare for the possibility of those citizens who refuse to leave when a mandatory evacuation is ordered and shall respect the rights of personal liberty and freedom of all citizens, while protecting and preserving law and order and accomplishing the goals and objectives enumerated in this Part.

AUTHORITY NOTE: Promulgated in accordance with R.S. 15:587.

HISTORICAL NOTE: Promulgated by the Office of the Governor, Office of Homeland Security and Emergency Preparedness, LR 33:647 (April 2007), amended LR 38:50 (January 2012).

Chapter 5. Resource Allocation and Distribution of Non-federal Cost Share

§501. Evacuation

A. The Governor's Office of Homeland Security and Emergency Preparedness, in preparing and maintaining regional and statewide evacuation plans and in responding to an actual disaster or emergency, shall allocate state evacuation resources in accordance with parish compliance with the requirements of this Part, to include the following factors:

1. the parish's designation as a high-risk area or contiguous risk area;

2. the parish's geographic proximity to the weather event or disaster, in relation to other parishes in the high risk area;

3. the risk assessment prepared by the parish and municipality identifying the at-risk population and essential workers of the parish;

4. the transportation inventory prepared by the parish and municipality identifying all local modes of transportation subject to the parish president's emergency powers, and non-local modes of transportation with which the parish has executed contingency agreements for transporting its at-risk population during a mandatory evacuation;

5. the evacuation plan prepared by the parish making maximum utilization of its own local modes of transportation subject to the parish president's emergency powers for its at-risk population and essential workers;

6. whether the parish president has declared an emergency and evacuation in conjunction with requesting state evacuation assistance.

B. The state will rely on the parish's transportation inventory submitted in accordance with this Part for planning purposes and, when requested by the parish, use its best efforts to supplement the parish's evacuation assets with state evacuation resources. However, for a disaster or emergency in which a parish requests state or federal evacuation assistance to support an evacuation, the parish's request for state evacuation assistance shall serve as acknowledgement of the parish's responsibility for that portion of the nonfederal share of the evacuation costs allocable to the services provided by the state to that parish. All costs associated with the evacuation services provided by the state shall be allocated to the parish unless otherwise determined by the commissioner of the Division of Administration.

AUTHORITY NOTE: Promulgated in accordance with R.S. 29:725.

HISTORICAL NOTE: Promulgated by the Governor's Office of Homeland Security and Emergency Preparedness, LR 38:51 (January 2012).

§503. Sheltering

A. The Governor's Office of Homeland Security and Emergency Preparedness, in preparing and maintaining regional and statewide sheltering plans and in responding to an actual disaster or emergency, shall allocate state sheltering resources in accordance with the requirements of this Part, to include the following factors:

1. the parish's designation as a high-risk area or contiguous risk area;

2. the parish's geographic proximity to the weather event or disaster, in relation to other parishes in the high risk area;

3. the risk assessment prepared by the parish and municipality identifying the at-risk population and essential workers of the parish;

4. the shelter inventory prepared by the parish and municipality identifying all available local places of shelter subject to the parish president's emergency powers, and non-local facilities with which the parish has executed contingency agreements for sheltering its at-risk population;

5. the evacuation plan prepared by the parish making maximum utilization of its own means of transportation for its at risk population.

B. The state will rely on the parish's shelter inventory submitted in accordance with this Part for planning purposes and, when requested by the parish, use its best efforts to supplement the parish's shelter assets with state shelter resources. However, for a disaster or emergency in which a parish requests state or federal shelter assistance, the parish's request for state shelter assistance shall serve as acknowledgement of the parish's responsibility for that portion of the nonfederal share of the shelter costs allocable to the services provided by the state to that parish. All costs associated with the shelter services provided by the state shall be allocated to the parish unless otherwise determined by the commissioner of the Division of Administration.

C. For a disaster or emergency in which a parish requests state or federal sheltering assistance, the state may assume all or part of the non-federal share of the cost of the state or federal sheltering assistance based upon compliance with this Part and availability of state funds.

AUTHORITY NOTE: Promulgated in accordance with R.S. 29:725.

HISTORICAL NOTE: Promulgated by the Governor's Office of Homeland Security and Emergency Preparedness, LR 38:51 (January 2012).

Title 55
PUBLIC SAFETY
Part XXIII. Intrastate Mutual Aid Compact

Chapter 1. General Provisions

§101. Overview

A. Act 1035 of the 2010 Regular Legislative Session, effective on August 15, 2010, established the Intrastate Mutual Aid Compact, effective for any and all parishes in the state, to provide and promote mutual assistance among the parishes in the prevention of, response to, and recovery from, an emergency or disaster, as defined in R.S. 29:723, occurring in a parish, or any other event that exceeds a parish's capability or resources and provides for mutual cooperation among the parishes in conducting disaster related exercises, testing, or other training activities outside actual emergency periods.

B. The Intrastate Mutual Aid Compact does not mandate that a parish provide assistance when requested, nor does it preclude parishes from entering into supplemental agreements with other parishes pursuant to R.S. 29:730 and 730.1 and does not affect any other agreement to which a parish may currently be a party, or decide to be a party.

C. Revised Statutes 29:739(D) added by Act 1035 of the 2010 Regular Legislative Session, effective August 15, 2010, established the Intrastate Mutual Aid Subcommittee whose responsibility it will be to:

1. review the progress and status of providing statewide mutual aid in times of disaster;

2. assist in developing methods to track and evaluate the activation of the mutual aid system; and

3. examine issues facing participating parishes regarding the implementation of this compact;

4. prepare an annual report on the condition and effectiveness of mutual aid in the state, make recommendations for correcting any deficiencies, and submit that report to the governor and the Joint House and Senate Select Committees on Homeland Security by January thirty-first of each year;

5. the subcommittee shall make recommendations to the Governor's Office of Homeland Security and Emergency Preparedness on comprehensive guidelines and procedures including but not limited to the following:

a. projected or anticipated costs;

b. checklists for requesting and providing assistance;

c. recordkeeping for all parishes;

d. reimbursement procedures;

e. changes in legislation or policy to better facilitate the mutual aid process; and

f. any necessary implementation elements such as forms for requests and other records documenting deployment and return of assets.

D. Revised Statutes 29:739(E)(3) added by Act 1035 of the 2010 Regular Legislative Session, effective August 15, 2010, requires the Governor's Office of Homeland Security and Emergency Preparedness, in coordination with the Intrastate Mutual Aid Subcommittee, to develop guidance and procedures governing the implementation of the Intrastate Mutual Aid Compact in accordance with the Administrative Procedure Act.

AUTHORITY NOTE: Promulgated in accordance with R.S. 29:725.

HISTORICAL NOTE: Promulgated by the Office of the Governor, Office of Homeland Security and Emergency Preparedness, LR 38:1019 (April 2012).

§103. Purpose and Scope

A. The purpose of these regulations is:

1. to establish an agreement for providing governmental services and resources in preparation for, response to and recovery from any disaster resulting in a formal declaration of emergency; and

2. to provide an easily accessible source of information on procedures used during the Intrastate Mutual Aid Compact process.

B. The scope of these regulations is:

1. a simple and efficient structure for requesting and receiving disaster assistance from other participating parishes;

2. resolution of potential legal and administrative issues in advance of a disaster; and

3. a tool to strengthen mutual aid resources across Louisiana by strengthening local government's capacity to respond to a disaster.

AUTHORITY NOTE: Promulgated in accordance with R.S. 29:725.

HISTORICAL NOTE: Promulgated by the Office of the Governor, Office of Homeland Security and Emergency Preparedness, LR 38:1020 (April 2012).

§105. Definitions

IMAC—Intrastate Mutual Aid Compact.

First Responder—those individuals who in the early stages of an incident are responsible for the protection and preservation of life, property, evidence, and the environment,

including emergency response providers as defined in Section 2 of the Homeland Security Act of 2002 (6 U.S.C. 101), as well as emergency management, public health, clinical care, public works, and other skilled support personnel, such as equipment operators that provide immediate support services during prevention, response, and recovery operations consistent with Homeland Security Presidential Directive 8.

Requesting Parish—any parish in the state of Louisiana that has informally or formally requested Intrastate Mutual Aid Compact assistance.

Assisting Parish—any parish in the state of Louisiana that is providing an Intrastate Mutual Aid Compact requested resource.

Authorized Representative—person designated by the chief executive of the parish to obligate resources and expend funds on behalf of the parish.

AUTHORITY NOTE: Promulgated in accordance with R.S. 29:725.

HISTORICAL NOTE: Promulgated by the Office of the Governor, Office of Homeland Security and Emergency Preparedness, LR 38:1020 (April 2012).

Chapter 3. Limitations, Implementation, and Reimbursement

§301. Limitations

A. A parish's obligation to provide assistance in preparation for, response to or recovery from a disaster shall be subject to the following conditions:

1. first responders of a responding parish shall remain subject to recall by their responding jurisdiction, will continue to utilize customary skills, techniques, standard operating procedures to include medical procedures and protocols, and other procedures and protocols;

2. first responders shall be under the direction and control of the appropriate officials within the incident management system of the parish receiving the assistance; and

3. assets and equipment of a responding parish shall remain subject to recall by their responding jurisdiction, but shall be under the direction and control of the appropriate officials within the incident management system of the parish receiving the assistance.

AUTHORITY NOTE: Promulgated in accordance with R.S. 29:725.

HISTORICAL NOTE: Promulgated by the Office of the Governor, Office of Homeland Security and Emergency Preparedness, LR 38:1020 (April 2012).

§303. Implementation

A. Responsibilities of a requesting parish include:

1. parish state of emergency declaration prior to requesting assistance;

2. documenting of process from declaration through reimbursement;

3. utilizing State Emergency Management process for requesting resources;

4. adhering to guidelines set forth in the National Incident Management System; and

5. participating in after action review and implementing corrective actions.

B. Responsibilities of an assisting parish include:

1. verifying the details of the request for assistance;

2. ensuring receipt of proper authorization from requesting parish prior to deployment;

3. utilizing State Emergency Management process for requesting resources;

4. adhering to guidelines set forth in the National Incident Management System; and

5. participating in after action review and implementing corrective actions.

C. Responsibilities of the state of Louisiana:

1. overseeing and maintaining the State Emergency Management process in order to facilitate the IMAC process; and

2. maintaining updated parish authorized representative listing.

D. By officially executing the IMAC request, the authorized representatives from both the assisting parish and requesting parish will have, in effect, entered into a contract to provide and to reimburse for services to be rendered under the Intrastate Mutual Aid Compact.

AUTHORITY NOTE: Promulgated in accordance with R.S. 29:725.

HISTORICAL NOTE: Promulgated by the Office of the Governor, Office of Homeland Security and Emergency Preparedness LR 38:1020 (April 2012).

§305. Reimbursement

A. Intrastate Mutual Aid Compact response shall not depend on assistance that may result from a state or federal disaster declaration.

B. With a letter to the requesting parish, assisting parishes may donate mutual aid or assume partial or total costs associated with loss, damage or use of personnel, equipment and/or resources while providing mutual aid through an IMAC request.

C. Reimbursement shall not be:

1. provided to those assisting parishes that document the donation of their services or assume any costs while providing IMAC assistance;

2. available for costs incurred when mutual aid assistance has been provided to a parish that does not have a formal declaration of emergency;

3. for costs associated with Worker Compensation claims or death benefits to injured assisting parish

responders, other than the portion of the responder's agreed-upon daily cost rate ordinarily attributable to "benefits;"

4. in duplication of other payment and insurance proceeds;

5. provided for costs and expenses incurred that cannot be supported by documentation;

6. provided to assisting parishes that have self-deployed without a formal request from a requesting parish; or

7. provided for ineligible costs including:

a. the value of volunteer labor or paid labor that is provided at no cost;

b. administration of IMAC resources; and

c. training, exercise or on-the-job training.

D. Responsibilities of a requesting parish include:

1. review and agreement to estimated daily costs of resources offered by an assisting parish prior to deployment of those resources;

2. coordination of requests for reimbursement from assisting parish through the authorized representatives;

3. maintaining financial records in compliance with the state or local retention guidance;

4. ensure a state of emergency was issued by the parish;

5. maintaining and making available all appropriate documentation; and

E. Responsibilities of an assisting parish include:

1. providing estimated daily costs of resources requested by the requesting parish prior to deployment of resources;

2. using Intrastate Mutual Aid Compact reimbursement procedures, seek reimbursement through the authorized representative for expenses associated with resources provided in response to an IMAC request;

3. providing accurate and complete request for reimbursement to the requesting parish authorized representative within 30 days from demobilization;

4. maintaining original documents that support request for reimbursement in accordance with applicable record retention guidance; and

5. providing a written request for a time extension through the authorized representative if a reimbursement request cannot be completed within the 30 day timeframe.

F. Responsibilities of the state of Louisiana:

1. providing technical assistance should a requesting parish seek reimbursement for mutual aid provided by an assisting parish.

G. Revised Statutes 29:739(H) added by Act 1035 of the 2010 Regular Legislative Session, effective August 15, 2010, provides that personnel authorized by their employer to respond to an event who sustain injury or death in the course and scope of their employment remain entitled to all applicable benefits normally available pursuant to their employment even though they may be under the direction and control of another governmental entity.

AUTHORITY NOTE: Promulgated in accordance with R.S. 29:725.

HISTORICAL NOTE: Promulgated by the Office of the Governor, Office of Homeland Security and Emergency Preparedness, LR 38:1021 (April 2012).

Title 55
PUBLIC SAFETY
Part XXV. First Responder Best Practices for Administration of Opioid Antagonists

Chapter 1. Administration of Opioid Antagonists

§101. Purpose and Applicability

A. Opioid-related overdose is one of the leading causes of accidental deaths in Louisiana. Fatal and nonfatal overdose can result from the abuse of opiates such as morphine, heroin, fentanyl, oxycodone as found in OxyContin®, Percocet®, Percodan®, and hydrocodone as found in Vicodin®. Opioid antagonists, such as naloxone, displace the opioid from receptors in the brain and can therefore reverse an opiate overdose. It has no euphoric properties and minimal side effects. If it is administered to a person who is not suffering an opioid-related overdose, it rarely produces any clinical effects. Naloxone has been available as an injectable since the 1960s, but was recently developed as a nasal spray. R.S. 40:978.1 and R.S. 14:403.11 provide for first responders to receive and administer opioid antagonists, provide for immunity from liability, and require the promulgation of a set of best practices by the Deputy Secretary of Public Safety Services of the Department of Public Safety and Corrections for use by a fire department or law enforcement agency in the administration and enforcement of those statutes. In accordance with those statutes, these guidelines establish a set of best practices for fire departments or law enforcement agencies relating to training to safely administer opioid antagonists, standards and procedures for storage of opioid antagonists, and emergency follow-up procedures.

AUTHORITY NOTE: Promulgated in accordance with R.S. 40:978.1(F) and R.S. 14:403.11.

HISTORICAL NOTE: Promulgated by the Department of Public Safety and Corrections, Office of State Police, LR 45:72 (January 2019).

§103. Definitions

A. As used in this Part, the following words shall mean:

First Responder—any of the following:

a. a peace officer as defined in R.S. 40:2402

b. a firefighter regularly employed by a fire department of any municipality, parish, or fire protection district of the state of Louisiana, or any volunteer fireman of the state of Louisiana.

Opioids—includes heroin, fentanyl, morphine, buprenorphine, codeine, hydromorphone, hydrocodone, oxymorphone, methadone, oxycodone. Opioids do not include cocaine, benzodiazepines such as Xanax®, amphetamines, or alcohol.

Opioid Antagonists—agents such as naloxone that have high affinity to bind to opiate receptors but do not activate these receptors. This effectively blocks the receptor, preventing the body from responding to opioids and endorphins. These drugs block the effects of externally administered opioids.

Opioid-Related Drug Overdose—a condition including extreme physical illness, decreased level of consciousness, respiratory depression, coma, or the ceasing of respiratory or circulatory function resulting from the consumption or use of an opioid, or another substance with which an opioid was combined.

AUTHORITY NOTE: Promulgated in accordance with R.S. 40:978.1(F) and R.S. 14:403.11.

HISTORICAL NOTE: Promulgated by the Department of Public Safety and Corrections, Office of State Police, LR 45:73 (January 2019).

§105. Training Requirements

A. First responders who will possess and administer naloxone or other opioid antagonists shall be trained on, at a minimum, the following:

1. standards and procedures for storage and administration of naloxone or other opioid antagonists in accordance with the guidelines of the manufacturer of the product or device. Because opioid antagonists can be administered through a nasal atomizer or through injection, the standards and procedures established by the manufacturer of the specific product or device to be used by the first responder shall be covered in the training;

2. patient assessment in order to recognize the signs/symptoms of an opioid-related overdose, which often includes:

a. face is extremely pale and/or clammy to the touch;

b. body is limp;

c. fingernails or lips have a blue or purple cast;

d. the patient is vomiting or making gurgling sounds;

e. the patient cannot be awakened or is unable to speak;

f. breathing is very slow or stopped;

g. heartbeat is very slow or stopped.;

3. contraindications of an opioid-related overdose;

4. emergency follow-up procedures, which may include:

a. calling 911 if not done prior to the first responder's arrival on scene or the administration of naloxone or other opioid antagonist.

b. administering a second dose of naloxone or other opioid antagonist if the patient does not respond.

c. performing rescue breathing or CPR if certified or instructions are provided by a 911 operator or dispatcher.

d. recognizing typical responses to treatment with naloxone or other opioid antagonists;

5. documenting the administration of naloxone or other opioid antagonists and retaining such documentation in accordance with law and agency policy;

6. safely disposing of used administration devices and replacement of administration devices.

B. It is recommended that training for first responders also include laws relating to possession and administration of naloxone or other opioid antagonists by third parties, and immunity for reporting of drug overdoses.

C. Training resources are available through the Substance Abuse and Mental Health Services Administration (SAMHSA), which has developed an opioid overdose toolkit available online through its website: www.samhsa.gov. Furthermore, the Bureau of Justice Assistance (BJA) has developed a law enforcement naloxone toolkit which is available online through its website: www.bja.gov. Furthermore, as provided by R.S. 40:978.1, a law enforcement agency or fire department may enter into a written agreement to affiliate with an ambulance service provider or a physician for the purposes of obtaining a supply of naloxone or other opioid antagonist or and/or to obtain training necessary to safely and properly administer naloxone or other opioid antagonists to individuals who are believed to be undergoing an opioid-related drug overdose.

AUTHORITY NOTE: Promulgated in accordance with R.S. 40:978.1(F) and R.S. 14:403.11.

HISTORICAL NOTE: Promulgated by the Department of Public Safety and Corrections, Office of State Police, LR 45:73 (January 2019).

§107. Documentation and Tracking

A. In order to help determine the effectiveness of reducing opioid overdoses, records shall be kept of each instance in which a first responder administers naloxone or other opioid antagonist to an individual who is undergoing or believed to be undergoing an opioid-related drug overdose.

AUTHORITY NOTE: Promulgated in accordance with R.S. 40:978.1(F).

HISTORICAL NOTE: Promulgated by the Department of Public Safety and Corrections, Office of State Police, LR 45:73 (January 2019).

§109. Immunity

A. R.S. 40:978.1(E) provides that a first responder who, reasonably believing another person to be undergoing an opioid-related drug overdose, administers naloxone or another opioid antagonist to that person, shall be immune from civil liability, criminal prosecution, or disciplinary or other adverse action under any professional licensing statute for any outcomes resulting from the administration of the naloxone or another opioid antagonist to that person, unless personal injury results from the gross negligence or willful or wanton misconduct of the first responder administering the drug.

B. R.S. 14:403.11(C)(2) provides that any first responder administering an opiate antagonist in a manner consistent with addressing opiate overdose shall not be liable for any civil damages as a result of any act or omission in rendering such care of services as a result of any act or failure to act to provide or arrange for further medical treatment or care for the person involved in said emergency, unless the damage or injury was caused by willful or wanton misconduct or gross negligence.

AUTHORITY NOTE: Promulgated in accordance with R.S. 40:978.1(F) and R.S. 14:403.11.

HISTORICAL NOTE: Promulgated by the Department of Public Safety and Corrections, Office of State Police, LR 45:73 (January 2019).