CONTENTS August 2012

I. EXECUTIVE ORDERS

Executive Branch—Limited Hiring Freeze 1880
DOTD Guidelines for Vehicles, Trucks and Loads Which Haul Hay from Louisiana to Texas 1881

II. EMERGENCY RULES

Children and Family Services

Division of Programs, Economic Stability—Child Care Assistance Program (CCAP) Reducing the Income Limit for Eligibility (LAC 67:III.5103 and 5109) 1883
Licensing Section—Juvenile Detention Facilities Licensure Effective Date (LAC 67:V.7507) 1884

Education

Student Financial Assistance Commission, Office of Student Financial Assistance—Scholarship/Grant Programs (LAC 28:IV.301, 507, 509, 703, 705, 803, 805, 2103, and 2107) 1884
Tuition Trust Authority, Office of Student Financial Assistance—START Savings Program (LAC 28:VI.107) 1890

Environmental Quality

Office of the Secretary—Offset Requirements and Emission Reduction Credits Banking (LAC 33:III.504, 601, 603, 605, 607, 615 and 619)(AQ327E2) 1891

Health and Hospitals

Bureau of Health Services Financing—Coordinated Care Network (LAC 50:I.3103-3109, 3303, and 3307) 1893
Disproportionate Share Hospital Payments—Distinct Part Psychiatric Units—Payment Methodology (LAC 50:V.2709) 1895
Disproportionate Share Hospital Payments—Low Income and Needy Care Collaboration (LAC 50:V.2503 and 2713) 1896
Disproportionate Share Hospital Payments—Small Rural Hospitals—Qualifying Criteria (LAC 50.V.2705) 1898
Federally Qualified Health Centers—Fluoride Varnish Applications (LAC 50:XI.10301 and 10701) 1899
Home and Community-Based Services Waivers—Children's Choice Allocation of Waiver Opportunities (LAC 50:XXI.11107) 1900
Home and Community-Based Services Waivers—New Opportunities Waiver—Reimbursement Rate Reduction (LAC 50:XXI.14301) 1901
Home and Community-Based Services Waivers—Residential Options Waiver (LAC 50:XXI.Chapters 161-169) 1902
Home and Community-Based Services Waivers—Support Coordination Standards for Participation (LAC 50:XXI.Chapter 5) 1917
Inpatient Hospital Services—Distinct Part Psychiatric Units—Reimbursement Methodology (LAC 50:V.915 and 959) 1925
Inpatient Hospital Services—Free-Standing Psychiatric Hospitals—Low Income and Needy Care Collaboration (LAC 50:V.959) 1926
Inpatient Hospital Services—Neonatal and Pediatric Intensive Care Units and Outlier Payment Methodologies (LAC 50:V.953-954 and 967) 1927
Inpatient Hospital Services—Non-Rural, Non-State Hospitals—Low Income and Needy Care Collaboration (LAC 50:V.953) 1930
Inpatient Hospital Services—Non-Rural, Non-State Hospitals—Reimbursement Rate Reduction (LAC 50:V.953, 955 and 967) 1931
Inpatient Hospital Services—Non-Rural, Non-State Public Hospitals—Reimbursement Methodology (LAC 50:V.953 and 963) 1931
Inpatient Hospital Services—Non-Rural, Non-State Public Hospitals—Supplemental Payments (LAC 50:V.963) 1932
Inpatient Hospital Services—State Hospitals—Reimbursement Rate Reduction (LAC 50:V.551) 1933
Intermediate Care Facilities for Persons with Developmental Disabilities—Public Facilities Reimbursement Methodology (LAC 50:VII.32965-32969) 1934

This public document was published at a total cost of $4,300. Five hundred copies of this public document were published in this monthly printing at a cost of $4,300. The total cost of all printings of this document including reprints is $4,300. This document was published by Moran Printing, Inc. 5425 Florida Boulevard, Baton Rouge, LA 70806, as a service to the state agencies in keeping them cognizant of the new rules and regulations under the authority of R.S. 49:950-971 and R.S. 49:981-999. This material was printed in accordance with standards for printing by state agencies established pursuant to R.S. 43:31. Printing of this material was purchased in accordance with the provisions of Title 43 of the Louisiana Revised Statutes.

The Office of the State Register provides auxiliary aids for the *Louisiana Register* for visually impaired individuals. By appointment, oral presentation of the *Register* is available at the Office of the State Register, or an audiocassette tape of requested sections of the *Register* can be provided for the cost incurred by the Office of the State Register in producing such a tape. For more information contact the Office of the State Register.

Medical Transportation Program—Emergency Ambulance Services—Reimbursement Rate Reduction (LAC 50:XXVII.325 and 353) 1936
Nursing Facilities—Reimbursement Rate Reduction (LAC 50:II.20005) 1936
Nursing Facilities—Reimbursement Rate Reduction—Post-Rebase Rate Cut (LAC 50:II.20005) 1937
Nursing Facilities—Reimbursement Rate Reduction—Pre-Rebase Rate Cut (LAC 50:II.20005) 1938
Outpatient Hospital Services—Non-Rural, Non-State Hospitals and Children's Specialty Hospitals Reimbursement Rate Reduction (LAC 50:V.5313, 5317, 5513, 5517, 5713, 5719, 6115 and 6119) 1939
Outpatient Hospital Services—State-Owned Hospitals—Reimbursement Rate Reduction (LAC 50:V.5319, 5519, 5715 and 6127) 1940
Pharmacy Benefits Management Program—Medication Administration—Influenza Vaccinations (LAC 50:XXIX.123, 991 and 993) 1941
Professional Services Program—Anesthesia Services—Reimbursement Rate Reduction (LAC 50:IX.15133 and 15135) 1942
Professional Services Program—Fluoride Varnish Applications (LAC 50:IX.901-905 and 15105) 1943
Psychiatric Residential Treatment Facilities—Licensing Standards (LAC 48:I.9003, 9009, 9077, 9093, and 9097) 1944
Rural Health Clinics—Fluoride Varnish Applications (LAC 50:XI.16301 and 16701) 1945
Office for Citizens with Developmental Disabilities—Home and Community-Based Services Waivers Children's Choice Allocation of Waiver Opportunities (LAC 50:XXI.11107) 1900
Home and Community-Based Services Waivers—New Opportunities Waiver—Reimbursement Rate Reduction (LAC 50:XXI.14301) 1901
Home and Community-Based Services Waivers—Residential Options Waiver (LAC 50:XXI.Chapters 161-169) 1902
Office of Aging and Adult Services—Home and Community-Based Services Waivers—Support Coordination Standards for Participation (LAC 50:XXI.Chapter 5) 1917
Wildlife and Fisheries
Wildlife and Fisheries Commission—2012 Fall Shrimp Season Opening 1946
2012 Oyster Season on Public Oyster Seed Grounds 1947
2012-2013 Waterfowl Season Dates 1947
Additional Spring Inshore Shrimp Season Closure 1948
Fisheries Closure Due to Oil Spill 1949

III. RULES
Civil Service
Board of Ethics—Food and Drink Limit (LAC 52:I.1703) 1951
Education
Board of Elementary and Secondary Education—Bulletin 746—Louisiana Standards for State Certification of School Personnel—Standard Teaching Authorizations (LAC 28:CXXXI.303, 305, 311, 313, and 315) 1951
Student Financial Assistance Commission, Office of Student Financial Assistance—Scholarship/Grant Programs—Nontraditional Students (LAC 28:IV.1205) 1953
Scholarship/Grant Programs—Summer Sessions (LAC 28:IV.301) 1953
Tuition Trust Authority, Office of Student Financial Assistance—START Saving Program—Interest Rates for 2010 and 2011 (LAC 28:VI.315) 1954
Environmental Quality
Office of the Secretary—Permit Review (LAC 33:I.1507)(OS087) 1954
Regulatory Permit for Rock, Concrete, and Asphalt Crushing Facilities (LAC 33:III.317)(AQ321) 1955
Governor
Board of Examiners of Certified Shorthand Reporters—Certification of Transcript (LAC 46:XXI.1103) 1957
Health and Hospitals
Board of Dentistry—Anesthesia/Analgesia Administration and Continuing Education Requirements (LAC 46:XXXIII.1505, 1507, 1509, and 1611) 1958
Examination of Dentists (LAC 46:XXXIII.1709 and 1711) 1959
Patients' Records (LAC 46:XXXIII.318) 1960
Board of Wholesale Drug Distributors—Fees (LAC 46:XCI.801) 1960
Bureau of Health Services Financing—Ambulatory Surgical Centers—Reimbursement Methodology—Never Events (LAC 50:XI.7501) 1961
Facility Need Review—Outpatient Abortion Facilities (LAC 48:I.12501, 12503 and 12524) 1961
Inpatient Hospital Services—Healthcare-Acquired and Provider-Preventable Conditions (LAC 50:V.109) 1962
Outpatient Hospital Services—Never Events (LAC 50:V.5113) 1963
Professional Services Program—Reimbursement Methodology—Never Events (LAC 50:IX.15107) 1964
Professional Services Program—Supplemental Payments for Tulane Professional Practitioners (LAC 50:IX.15155) 1964
Licensed Professional Counselors Board of Examiners—License of Title for Marriage and Family Requirements for Licensure (LAC 46:LX. 3309, 3311, 3315, 3317, 3319, and 3321) 1965

Public Safety and Corrections
Office of Motor Vehicles—Driver's License—General Requirements (LAC 55:III.143-157) 1974
Office of State Police, Applied Technology Unit—Breath and Blood Alcohol Analysis (LAC 55:I.501, 507, 509, 511, 514, 515 and 516) 1992
State Uniform Construction Code Council—Seismic Design and Electrical Code (LAC 55:VI.301) 1994
Revenue
Policy Services Division—Certain Self-Propelled Vehicles Removed from Inventory (LAC 61:I.4415) 1995
Payment of Sales and Use Taxes by Persons Constructing, Altering, or Repairing Immovable Property (LAC 61:I.4372) 1995
Treasury
Louisiana Housing Corporation—Turnkey Mortgage Origination Program (LAC 16:II.Chapter 7) 1996
Wildlife and Fisheries
Wildlife and Fisheries Commission—Feral Hog Trapping (LAC 76:V.130) 1997
Vessel Monitoring Systems—Oyster Seed Ground Vessel Permit (LAC 76:VII.371 and 525) 1997
Wild Seafood Certification Program (LAC 76:I.Chapter 7) 1999

IV. NOTICES OF INTENT
Children and Family Services
Division of Programs, Licensing Section—Foster Care/Substitute Family Care (LAC 67:V.Chapter 63) 2003
Economic Development
Office of Business Development—Competitive Projects Payroll Incentive Program (LAC 13:I.Chapter 43) 2006
Corporate Headquarters Relocation Program (LAC 13:I.Chapter 45) 2007
Corporate Tax Apportionment Program (LAC 13:I.Chapter 41) 2009
Quality Jobs Program (LAC 13:I.1129) 2011
Office of the Secretary—Small Entrepreneurship Certification Program (Hudson Initiative) (LAC 19:VIII.Chapter 3) 2012
The Veteran Initiative—Certification (LAC 19:IX.Chapter 3) 2013
Education
Board of Elementary and Secondary Education—Bulletin 111—The Louisiana School, District and State Accountability System (LAC 28:LXXXIII.Chapters 3-51) 2014
Bulletin 126—Charter Schools (LAC 28:CXXXIX. 307, 503, 512, 513, 515, 701, 1101, 1301, 1303, 1502, 1503, 1701, 1903, 2501, 2705, 2709, 2901, and 2903) 2027
Bulletin 129—The Recovery School District Parent Petitions (LAC 28:CXLV.502) 2031
Bulletin 130—Regulations for the Evaluation and Assessment of School Personnel—Measures of Growth in Student Learning—Value-Added Model (LAC 28:CXLVII.303) 2034
Bulletin 132—Louisiana Course Choice Program (LAC 28:CXLIX.101, 103, 105, 301, 303, 501, 503, 505, 507, 701, 703, 901, 1101, and 1301) 2035
Bulletin 133—Scholarship Programs (LAC 28: CLIII.101, 301, 303, 501, 701, 901, and 1101) 2041
Bulletin 741—Louisiana Handbook for School Administrators—Carnegie Credit for Middle School Students (LAC 28: CXV.2321) 2046
Bulletin 741—Louisiana Handbook for School Administrators—Connections Process (LAC 28:CXV.2907) 2047
Bulletin 741—Louisiana Handbook for School Administrators—Credit Recovery (LAC 28:CXV.2324) 2048
Bulletin 741—Louisiana Handbook for School Administrators—Distance Education (LAC 28:CXV.2395) 2048
Bulletin 741—Louisiana Handbook for School Administrators—General Career and Technical Education (LAC 28:CXV.2377) 2049
Bulletin 741—Louisiana Handbook for School Administrators—School Food Service (LAC 28:CXV.2103) 2051
Bulletin 746—Louisiana Standards for State Certification of School Personnel (LAC 28:CXXXI. 307, 343, 345, 346, 347, 504, 507, 509, 701, 703, 705, 707, 709, 710, 711, 723, 725, 803, 901, 908, and 910) 2052
Bulletin 921—Policy and Procedure Manual for the Louisiana Quality Education Support Fund 8(g) (LAC 28:XCIII.Chapters 1-11) 2058
Bulletin 1196—Louisiana Food and Nutrition Programs, Policies of Operation (LAC 28:XLIX.101-3501) 2065
Technical Revisions and Updates (LAC 28:I.103, 305-315, 501, 703-705, 709-713, 713, 719, 901, 903, 1101-1107 and 1303) 2066
Student Financial Assistance Commission, Office of Student Financial Assistance—Scholarship/Grant Programs (LAC 28:IV.301, 507, 509, 703, 705, 803, 805, 2103, and 2107) 2074
Tuition Trust Authority, Office of Student Financial Assistance—START Saving Program—Applicable Definitions (LAC 28:VI.107) 2080
Environmental Quality
Office of the Secretary—Offset Requirements and Emission Reduction Credits Banking (LAC 33:III.504, 601, 603, 605, 607, 615 and 619)(AQ327) 2081
Office of the Secretary, Legal Affairs Division—Addition to List of Exempted Compounds (LAC 33:III.2117)(AQ335ft) 2084
Chapter 49 Incorporation by Reference Update (LAC 33:IX.4901 and 4903)(WQ086ft) 2085
Toxic Emissions Reporting Requirements (LAC 33:III.5301, 5303 and 5307)(AQ333) 2086
Medical Use of Byproduct Material—Authorized User Clarification (LAC 33:XV.763 and 1599)(RP054ft) 2088

Governor
Board of Examiners for New Orleans and Baton Rouge—Steamship Pilots for the Mississippi River (LAC 46:LXX.Chapters 61, 62, 63, and 64) 2089
Division of Administration, Racing Commission—Owner's Entry of More Than One Horse (LAC 35:V.6335) 2092
Office of Financial Institutions—Dishonest or Unethical Practices (LAC 10:XIII.1201 and 1203) 2093
Health and Hospitals
Board of Examiners of Psychologists—Continuing Education (LAC 46:LXIII.Chapter 8) 2096
Board of Wholesale Drug Distributors—Policy and Procedures and Quarantine of Legend Drugs or Legend Devices (LAC 46:XCI.313 and 1101) 2099
Bureau of Health Services Financing—Home and Community-Based Services Waivers—Standards for Participation (LAC 50:XXI.Chapter 1) 2100
Inpatient Hospital Services—Non-Rural, Non-State Public Hospitals—Supplemental Payments (LAC 50:V.963) 2101
Inpatient Hospital Services—Reimbursement Methodology—Medical Education Payments (LAC 50:V.551, 967 and 1331) 2103
Outpatient Hospital Services—State-Owned Hospitals—Medical Education Payments (LAC 50:V.5319, 5519, 5919 and 6127) 2104
Surveillance and Utilization Review Subsystem (LAC 48:I.Chapters 41 and 42) 2106
Office of Public Health—Disease Reporting Requirements (LAC 51:II.105,113 and 999) 2121
Emergency Medical Services—Automated External Defibrillators (LAC 48:I.6101, 6103 and 6105) 2124
Sanitary Code—Marine and Fresh Water Animal Food Products (LAC 51:IX.321, 327, 329 and 331) 2127
Sanitary Code—Plumbing (LAC 51:I.101, 123; VI.101, 109, 113, 121, 319, 321, 509, 705, 709, 1117, 1313, 1515; VII.101, 2117; X.101, 113, 115; XII.101, 335, 344, 371; XIV.101-1813; XVI.101; XVII.101, 107, 303; XVIII.101; XXI.105; XXIII.301; and XXIV.103, 717) 2129
Tuberculosis Control Program—Required Medical Examinations (LAC 51:II.505) 2265
Natural Resources
Office of Conservation—Fees (LAC 43:XIX.701, 703, and 707) 2267
Public Safety and Corrections
Corrections Services—Judicial Agency Referral Residential Facilities (LAC 22:I.1301 and 1303) 2269
Louisiana Risk Review Panel (LAC 22:I.107) 2271
Gaming Control Board—Electronic Submission of Documents (LAC 42:III.111, 401, 402, 403, XI.2403, 2405, 2407, 2409, 2417 and 2424) 2271
Record Preparation Fees (LAC 42:III.109) 2274
Office of State Police—Operator Qualifications (LAC 55:I.503) 2275
Revenue
Office of Alcohol and Tobacco Control—Regulation III—Prohibitive Acts—Vending Machines (LAC 55:VII.305) 2276
Regulation VII—Procedures Determined for Issuing Permits (LAC 55:VII.315) 2277
Regulation IX—Prohibition of Certain Unfair Business Practices (LAC 55:VII.317) 2278
Tobacco Permits (LAC 55:VII.3103, 3107, and 3109) 2280
Policy Services Division—Income Tax Credits for Wind or Solar Energy Systems (LAC 61:I.1907) 2282
Wildlife and Fisheries
Wildlife and Fisheries Commission—Internet Purchase of Commercial Licenses and Permits (LAC 76:VII.403, 413 and 415) 2286
Workforce Commission
Office of Workers' Compensation—Form LWC-WC-1009 (LAC 40:I.2012, 2024, 2116, 2136, 2214, 2228, 2314, and 2328) 2288

V. POTPOURRI
Governor
Division of Administration, Office of Information Technology—OIT Bulletin Published 2291
Health and Hospitals
Office of Public Health, Nutrition Services Program—Special Supplemental Nutrition Program for Women, Infants and Children (WIC) 2291
Natural Resources
Office of Conservation—Orphaned Oilfield Sites 2291
Office of Conservation, Environmental Division—Legal Notice—Docket No. ENV 2012-07 2291
Office of the Secretary, Fishermen's Gear Compensation Fund—Latitude/Longitude Coordinates 2292
Workforce Commission
Office of Workers' Compensation—Average Weekly Wage Rate 2292
Weekly Compensation Benefits Limits 2292

VI. INDEX 2293

Executive Orders

EXECUTIVE ORDER BJ 12-06

Executive Branch—Limited Hiring Freeze

WHEREAS, pursuant to R.S. 42:375, the Governor may issue executive orders which prohibit or regulate the filling of any new or existing vacancies in positions of employment in the executive branch of state government (hereafter "hiring freeze");

WHEREAS, R.S. 39:84 provides authority to the Governor to regulate and control personnel transactions;

WHEREAS, to limit or control the growth in government positions and to prepare for the budget challenges in the ensuing years, prudent fiscal management practices dictate that the best interests of the citizens of the State of Louisiana will be served by the implementation of a hiring freeze in the executive branch of state government to achieve at least a State General Fund dollar savings of $13 million;

WHEREAS, higher education plays a vital role for the citizens of our state; and, in addition, higher education in Louisiana has a unique management structure. Recognizing this, the Commissioner of Higher Education shall have the authority to manage the positions within higher education, including the hospitals, within the confines of this Executive Order and any subsequent memorandum issued by the Commissioner of Administration as authorized by this Order limiting the number of Table of Organization (T.O.) and Non-T.O. Full-Time Equivalents (FTEs); and

NOW THEREFORE, I, BOBBY JINDAL, Governor of the State of Louisiana, by virtue of the authority vested by the Constitution and laws of the State of Louisiana, do hereby order and direct as follows:

SECTION 1: No vacancy in an existing or new position of employment within the executive branch of state government that exists on or occurs after the effective date of this order shall be filled which would in any manner, decrease, or in the case of Non-T.O. FTEs increase, the number of such frozen positions within the department, budget unit, agency, and/or office, within the executive branch of state government below the number frozen determined as provided in Paragraph B of this section. This includes Appropriated Table of Organization Full-Time Equivalent positions (T.O. FTEs), Other Compensation positions (Non-T.O. FTEs), Other Charges positions (Non-T.O. FTEs), job appointments (Non-T.O. FTEs), and restricted appointments (Non-T.O. FTEs).

A. The following departments, agencies, and/or budget units of the executive branch of the State of Louisiana (hereafter "Unit and/or "Units"), as described in and/or funded by appropriations through Acts 13 and 43 of the 2012 Regular Session of the Louisiana Legislature (hereafter "Acts"), shall be subject to the hiring freeze as provided in this Executive Order.

	Executive Branch	
Schedule 01	**Executive Department**	
Schedule 03	**Veterans Affairs**	
Schedule 05	**Economic Development**	
Schedule 06	**Culture, Recreation and Tourism**	
Schedule 07	**Transportation and Development**	
Schedule 08	**Corrections Services**	
Schedule 08	**Public Safety Services**	
Schedule 08	**Youth Services**	
Schedule 09	**Health and Hospitals**	
Schedule 10	**Department of Children and Family Services**	
Schedule 11	**Natural Resources**	
Schedule 12	**Revenue**	
Schedule 13	**Environmental Quality**	
Schedule 14	**Louisiana Workforce Commission**	
Schedule 16	**Wildlife and Fisheries**	
Schedule 17	**Civil Service**	
	17-560	State Civil Service
	17-561	Municipal Fire and Police Civil Service
	17-562	Ethics Administration
	17-563	State Police Commission
	17-564	Division of Administrative Law
Schedule 19	**Higher Education**	
Schedule 19	**Special Schools and Commissions**	
	19B-653	Louisiana Schools for the Deaf and Visually Impaired
	19B-655	Louisiana Special Education Center
	19B-657	Louisiana School for Math, Science and the Arts
	19B-662	Louisiana Educational TV Authority
	19B-666	Board of Elementary & Secondary Education
	19B-673	New Orleans Center for the Creative Arts
Schedule 19	**Department of Education**	
Schedule 19	**LSU Health Sciences Center Health Care Services Division**	
Schedule 21	**Ancillary**	
	21-790	Donald J. Thibodaux Training Academy
	21-796	Central Regional Laundry
	21-800	Office of Group Benefits
	21-804	Office of Risk Management
	21-805	Administrative Services
	21-806	Louisiana Property Assistance
	21-807	Federal Property Assistance
	21-808	Office of Telecommunications Management
	21-810	Public Safety Services Cafeteria
	21-811	Prison Enterprises
	21-829	Office of Aircraft Services

B. The Commissioner of Administration is hereby authorized to and shall establish, on a continuing basis, the number of FTEs, hereafter referred to as "positions", to be frozen for each such department, agency, and/or budget unit specified in Paragraph A of this Section together with the expenditure of funds appropriated for such positions.

C. After the effective date of this Order, employee transfers, promotions, reallocations, and the creation of any new positions of employment within the executive branch of state government shall not, in any manner, decrease, or in the case of Non-T.O. FTEs increase, the number of such frozen

positions within the department, budget unit, agency, and/or office, within the executive branch of state government below the number frozen determined as provided in this Section unless otherwise adjusted by the Commissioner of Administration.

SECTION 2: To implement the freeze provided in Section 1, the Commissioner of Administration shall set a date upon which the head of each Unit listed in Section 1 of this Order shall submit to the Commissioner of Administration a mid-year budget adjustment plan, on the BA-7 form and questionnaire, which reflects the Unit's proposed allocation of the position freeze ordered in Section 1 of this Order, and a rationale or explanation of the mid-year budget adjustment plan.

A. The allocation of the position freeze shall be implemented by the Unit only upon the Commissioner's prior written approval of the Unit's mid-year budget adjustment plan.

B. Once approved, a mid-year budget adjustment plan may not be changed without the Commissioner's prior written approval.

SECTION 3: The Commissioner of Administration may develop guidelines pertaining to requests for adjustments from all or part of the prohibition set forth in Section 1 of this Order, and if necessary, develop definitions for the terms and/or the descriptions used in this Order.

SECTION 4: All departments, budget units, agencies, offices, entities, and officers of the State of Louisiana, or any political subdivision thereof, are authorized and directed to cooperate in the implementation of the provisions of this Order.

SECTION 5: The Governor, in accordance with R.S. 42:375(D) may order the Commissioner of Administration to withhold allotments in the appropriate category of expenditures from which the salary or compensation of any employee employed in violation of this executive order is paid in an amount equal to such compensation.

SECTION 6: The Order is effective July 1, 2012 and shall remain in effect through June 30, 2013 or until amended, modified, terminated, or rescinded by the Governor, or terminated by operation of law.

IN WITNESS WHEREOF, I have set my hand officially and caused to be affixed the Great Seal of Louisiana, at the Capitol, in the City of Baton Rouge, on this 11th day of July, 2012.

Bobby Jindal
Governor

ATTEST BY
THE GOVERNOR
J. Thomas Schedler
Secretary of State
1208#132

EXECUTIVE ORDER BJ 12-07

DOTD Guidelines for Vehicles, Trucks and Loads
Which Haul Hay from Louisiana to Texas

WHEREAS, R.S. 32:387 sets forth the terms and conditions whereby vehicles hauling certain loads may be issued special permits by the Department of Transportation and Development if they are in excess of legal statutory size and weight limits;

WHEREAS, as a result of the effects of a severe and extended drought conditions in several states, a necessity has arisen for oversize loads of hay to be expeditiously moved from Louisiana to those states experiencing drought conditions;

WHEREAS, the economic vitality of the farming industry is extremely dependent on the availability of hay for feed for the livestock; and

WHEREAS, in order to provide emergency assistance to farmers, the State of Louisiana is willing to waive certain permits, fees, and other obligations normally incurred by transporters;

NOW THEREFORE, I, BOBBY JINDAL, Governor of the State of Louisiana, by virtue of the authority vested by the Constitution and the laws of the State of Louisiana, do hereby order and direct as follows:

SECTION 1: The Department of Transportation and Development, the Department of Public Safety, and the Department of Revenue shall waive the following statutory requirements for the shipment of hay:

A. The following sizes and weights for vehicles transporting hay on highways maintained by the State of Louisiana shall not exceed the following limitations without permits:

1. All such vehicles transporting round hay bales to be loaded side by side across trailers creating dimensions that shall not exceed twelve (12) feet in width and shall not exceed fourteen (14) feet in height.

B. Permit fees are waived for all carriers while engaged in the transportation of hay to the victims of the drought in Texas.

C. The following requirements shall remain in effect:

1. All such vehicles must travel during daylight hours only, beginning at sunrise and ending at sunset.

2. All such vehicles must travel with the required signs and flags properly placed and indicating that they bear oversized loads.

3. Vehicles must be equipped with mirrors so that drivers are able to have a clear view of the highway at least 200 feet to the rear of the vehicle.

4. Loads must be securely bound to the transporting vehicles.

E. Carriers, owners and/or drivers of any vehicle being operated under this Order are responsible for verifying in advance that the actual dimensions and weights of the vehicles and loads are acceptable for all routes being traveled.

SECTION 2. Nothing in this Order shall be construed to allow any vehicle to exceed weight limits posted for bridges and similar structures, or relieve any vehicle or carrier, owner or driver of any vehicle from compliance with any restrictions other than those specified, or from any statute, rule, order or other legal requirement not specifically waived herein.

SECTION 3. This Order is effective upon signature and shall terminate on Thursday, October 25, 2012, unless amended, modified, terminated or rescinded by the Governor, or terminated by operation of law.

IN WITNESS WHEREOF, I have set my hand officially and caused to be affixed the Great Seal of Louisiana, at the Capitol, in the city of Baton Rouge, on this 27th day of July, 2012.

Bobby Jindal
Governor

ATTEST BY
THE GOVERNOR
J. Thomas Schedler
Secretary of State
1208#133

Emergency Rules

DECLARATION OF EMERGENCY

Department of Children and Family Services
Division of Programs

Child Care Assistance Program (CCAP)
Reducing the Income Limit for Eligibility
(LAC 67:III. 5103 and 5109)

The Department of Children and Family Services (DCFS) has exercised the emergency provisions of the Administrative Procedure Act, R.S. 49:953 (B) to amend LAC 67:III, Subpart 12, Chapter 51 Child Care Assistance Program, Sections 5103 and 5109. This Emergency Rule shall be adopted upon the signature of the DCFS secretary and shall remain in effect for a period of 120 days.

Section 5103 is being amended to reduce the maximum income limit for Child Care Assistance Program (CCAP) eligibility. The income limit is based on a percentage of the State Median Income (SMI), which is being reduced from 65 percent SMI to 55 percent SMI.

Section 5109 is being amended to allow the department to reduce the number of children's absences paid to CCAP providers who care for CCAP children that are authorized for full-time care.

The department considers emergency action necessary finding that an imminent threat may exist to the safety and welfare of children whose parents and guardians would not be able to afford adequate child care. Due to reductions in federal funding, the department is attempting to avoid the implementation of a child care waiting list or "freeze" on accepting applications. Implementing a child care waiting list or application "freeze" may lead to the most vulnerable families seeking services of "underground" or unregulated childcare, possibly placing their children in dangerous, unsupervised settings that could lead to abuse and/or neglect. A waiting list or application "freeze" could force the department to significantly reduce the level of service we offer and would be contrary to the DCFS mission of working to keep children safe and helping individuals and families become self-sufficient.

Although this Rule may result in a reduction of CCAP cases, it is the intent of the department to provide core services to the most vulnerable families who are in dire need of these vital services while continuing to operate with the funding available for CCAP.

Title 67
SOCIAL SERVICES
Part III. Economic Stability
Subpart 12. Child Care Assistance Program
Chapter 51. Child Care Assistance Program
Subchapter A. Administration, Conditions of Eligibility, and Funding
§5103. Conditions of Eligibility

A. - B.4.c ...

d. exception: a household in which all of the members described in Paragraph B.4 of this Section meet the disability criteria is not eligible for child care assistance unless one of those members meets, effective June 1, 2011, the required minimum average of 30 activity hours per week.

5. Household income does not exceed 55 percent of the state median income for a household of the same size. Income is defined as:

5.a. - G. ...

AUTHORITY NOTE: Promulgated in accordance with 45 CFR Parts 98 and 99, P.L.104-193, Act 58 2003 Reg. Session, ACF Guidance: ACYF-IM-CC-05-03.

HISTORICAL NOTE: Promulgated by the Department of Social Services, Office of Family Support, LR 24:356 (February 1998), amended LR 25:2444 (December 1999), LR 26:2827 (December 2000), LR 27:1932 (November 2001), LR 28:1490 (June 2002), LR 29:43 (January 2003), LR 29:1106 (July 2003), LR 29:1833 (September 2003), LR 30:496 (March 2004), LR 30:1487 (July2004), LR 31:101 (January 2005), LR 31:2263 (September 2005), LR 32:1464 (August 2006), LR 33:506 (March 2007), LR 34:692 (April 2008), LR 36:1278 (June 2010), repromulgated LR l36:1767 (August 2010), LR 37:1374 (May 2011), amended by the Department of Children and Family Services, Division of Programs, Economic Stability, LR 38:

Subchapter B. Child Care Providers
§5109. Payment

A. - D. ...

E. Payment will not be made for absences of more than two days by a child in any calendar month or for an extended closure by a provider of more than two consecutive days in any calendar month. A day of closure, on a normal operating day for the provider, is counted as an absent day for the child(ren) in the provider's care. If a child authorized for full-time care attends child care less than four hours in one day, this will be counted as a half day absent and half the daily rate will be paid to the provider. No absences will be authorized for part-time care.

Exception: In cases of a federal/state/locally declared emergency situation, or other special circumstances, the department may at the discretion of the Deputy Secretary of Programs waive this absence policy.

F. ...

AUTHORITY NOTE: Promulgated in accordance with 45 CFR Parts 98 and 99, and P.L. 104-193, ACF Guidance: ACYF-IM-CC-05-03.

HISTORICAL NOTE: Promulgated by the Department of Social Services, Office of Family Support, LR 24:357 (February 1998), amended LR 25:2445(December 1999), LR 26:2828 (December 2000), LR 27:1933 (November 2001), LR 28:1491 (June 2002), LR 29:1834 (September 2003), LR 30:1485 (July 2004), repromulgated LR 30:2078 (September 2004), amended LR 31:2265 (September 2005), LR 32:1465 (August 2006), LR 32:2097 (November 2006), LR 33:507 (March 2007), LR 34:692 (April 2008), LR 36:555 (March 2010), LR 36:847 (April 2010), LR 36:1279 (June 2010), LR 37:3491(December 2011, amended by the Department of Children and Family Services, Division of Programs, Economic Stability Section, LR 38:

Suzy Sonnier
Secretary

1208#044

DECLARATION OF EMERGENCY

Department of Children and Family Services
Division of Programs
Licensing Section

Juvenile Detention Facilities Licensure Effective Date
(LAC 67:V.7507)

The Department of Children and Family Services (DCFS), Division of Programs, Licensing Section in accordance with provisions of the Administrative Procedure Act, R.S. 49:953(B) proposes to amend LAC 67:V., Subpart 8, Chapter 75 Juvenile Detention Facilities, Section 7507, to change the effective date of the licensing standards for juvenile detention facilities. This Emergency Rule shall be effective on August 2, 2012 and shall remain in effect for a period of 120 days.

Section 7507 Licensing Requirements is being amended in accordance with Act 366 of the 2012 Legislative Session. Act 366 amended and reenacted R.S. 15:110(E) by changing the effective date for the licensure of all juvenile detention facilities from on or before January 1, 2013, to on or before July 1, 2013. This includes facilities owned or operated by any governmental, profit, nonprofit, private, or public agency. Emergency action is necessary to ensure that the department is in compliance with Act 366 which is effective August 1, 2012.

Title 67
SOCIAL SERVICES
Part V. Child Welfare
Subpart 8. Residential Licensing
Chapter 75. Juvenile Detention Facilities
§7507. Licensing Requirements

A. General Provisions

1.a. All providers meeting the criteria of Section 7507.A.1.b shall obtain a license on or before July 1, 2013 in accordance with R.S. 15:1110(E) in order to continue operating.

b. All providers in operation prior to July 1, 2013 may continue to operate without a license if timely application for a license has been made to DCFS. Providers shall make application to the department within 90 days of the effective date of this rule. All requirements herein shall be met, unless otherwise expressly stated in writing by the department prior to the issuance of a license.

2. Effective July 1, 2013, it is mandatory to obtain a license from the department prior to beginning operation.

3. - I.7. ...

AUTHORITY NOTE: Promulgated in accordance with R.S. 15:1110.

HISTORICAL NOTE: Promulgated by the Department of Children and Family Services, Division of Programs, Licensing Section, LR 38:1561 (July 2012), amended by the Department of Children and Family Services, Division of Programs, Licensing Section LR 38:

Suzy Sonnier
Secretary

1208#045

DECLARATION OF EMERGENCY

Student Financial Assistance Commission
Office of Student Finanical Assistance

Scholarship/Grant Programs
(LAC 28:IV.301, 507, 509, 703,
705, 803, 805, 2103, and 2107)

The Louisiana Student Financial Assistance Commission (LASFAC) is exercising the emergency provisions of the Administrative Procedure Act [R.S. 49:953(B)] to amend and re-promulgate the rules of the Scholarship/Grant programs [R.S. 17:3021-3025, R.S. 3041.10-3041.15, and R.S. 17:3042.1.1-3042.8, R.S. 17:3048.1, R.S. 56:797.D(2)].

This rulemaking implements Acts 108 and 215 of the 2012 Regular Session of the Louisiana Legislature to extend the deadline to earn a qualifying score on the ACT or SAT under certain extenuating circumstances and to extend the deadlines for first-time, full-time enrollment and for earning the minimum cumulative grade point average after TOPS award suspension for certain students who join the United States Armed Forces.

This rulemaking makes technical corrections to make all TOPS provisions in the rules consistent with previous change to the definition of Award Year (College) that allows use of hours earned in summer sessions and summer intersessions to meet the TOPS requirement to earn at least 24 hours each academic year.

This rulemaking extends the time to submit documentation in support of a student's application for a TOPS Award to January 15 immediately following the final deadline for receipt of the student's FAFSA or on-line application.

This rulemaking simplifies the requirements for certain exceptions to the TOPS continuation requirements.

This Declaration of Emergency is effective July 18, 2012, and shall remain in effect for the maximum period allowed under the Administrative Procedure Act. (SG13140E)

Title 28
EDUCATION
Part IV. Student Financial Assistance—Higher Education
Scholarship and Grant Programs
Chapter 3. Definitions
§301. Definitions

A. Words and terms not otherwise defined in this Chapter shall have the meanings ascribed to such words and terms in this Section. Where the masculine is used in these rules, it includes the feminine, and vice versa; where the singular is used, it includes the plural, and vice versa.

* * *

Qualified Summer Session—those summer sessions (includes terms and semesters conducted during the summer) for which the student's institution certifies that:

a. the summer session is required in the student's degree program for graduation and the student enrolled for at least the minimum number of hours required for the degree program for the session; or

b. the student can complete his program's graduation requirements in the summer session; or

c. the course(s) taken during the summer session is required for graduation in the program in which the student is enrolled and is only offered during the summer session; or

d. the course(s) taken during the summer session is in a program for a vocational or technical education certificate or diploma or a non-academic undergraduate degree; or

e. for the summer of 2006 only, the student is a displaced student as identified in §2103.G. 1 of these rules, whose TOPS award was not paid for one or more semesters during the 2005-2006 academic year; or

f. beginning with the summer of 2010, prior to the beginning of the summer session, the student:

i. has at least 60 academic college credit hours;

ii. has enrolled as a full time student for the summer session; and

iii. has signed a form provided by LOSFA:

(a). requesting payment for the summer session from the student's remaining TOPS eligibility;

(b). stating the student understands that the use of the TOPS award for the summer session reduces the student's TOPS eligibility by one semester or term; and

(c). stating the student understands that the grades earned during the summer session will be included in the student's cumulative grade point average.

* * *

AUTHORITY NOTE: Promulgated in accordance with R.S. 17:3021-3025, R.S. 17:3042.1 and R.S. 17:3048.1.

HISTORICAL NOTE: Promulgated by the Student Financial Assistance Commission, Office of Student Financial Assistance, LR 22:338 (May 1996), repromulgated LR 24:632 (April 1998), amended LR 24:1898 (October 1998), LR 24:2237 (December 1998), LR 25:256 (February 1999), LR 25:654 (April 1999), LR 25:1458 and 1460 (August 1999), LR 25:1794 (October 1999), LR 26:65 (January 2000), LR 26:688 (April 2000), LR 26:1262 (June 2000), LR 26:1601 (August 2000), LR 26:1993, 1999 (September 2000), LR 26:2268 (October 2000), LR 26:2752 (December 2000), LR 27:36 (January 2001), LR 27:284 (March 2001), LR 27:1219 (August 2001), LR 27:1840 (November 2001), LR 27:1875 (November 2001), LR 28:45 (January 2002), LR 28:446 (March 2002), LR 28:772 (April 2002), LR 28:2330, 2331 (November 2002), LR 29:555 (April 2003), LR 29:879 (June 2003), LR 30:1159 (June 2004), LR 30:2015 (September 2004), LR 31:36 (January 2005), LR 31:3112 (December 2005), LR 33:86 (January 2007), LR 33:439 (March 2007), LR 33:1339 (July 2007), LR 33:2612 (December 2007), LR 34:234 (February 2008), LR 34:1388 (July 2008), LR 34:1884 (September 2008), LR 35:228 (February 2009), LR 35:1489 (August 2009), LR 35:1490 (August 2009), LR 36:311 (February 2010), LR 36:490 (March 2010), LR 36:2854 (December 2010), LR 37:1561 (June 2011), LR 37:1562 (June 2011), LR 38:

Chapter 5. Applications, Federal Grant Aid and ACT Test

§507. Final Deadline for Submitting Documentation of Eligibility

A. - B.1. …

2. Beginning with the 2005-2006 academic year (college) through the 2010-11 academic year (college), all documentation and certifications necessary to establish student initial eligibility including, but not limited to, high school and/or college transcripts and certifications, copies of student aid reports, applicant confirmation forms, promissory notes, ACT and/or SAT scores, residency affidavits, proof of citizenship or permanent residency status and other documents that may be utilized in determining eligibility, must be received by LASFAC no later than July 1 immediately following the academic year (college) the student is first eligible for payment of a TOPS award . For example, if a student's initial FAFSA is received no later than July 1, 2007, for that student to receive an award for the 2007-2008 academic year (college), LASFAC must have in its possession all documents relevant to establishing eligibility by July 1, 2008.

3. Beginning with the 2011-12 academic year (college), all documentation and certifications necessary to establish student initial eligibility including, but not limited to, high school and/or college transcripts and certifications, copies of student aid reports, applicant confirmation forms, promissory notes, ACT and/or SAT scores, residency affidavits, proof of citizenship or permanent residency status and other documents that may be utilized in determining eligibility, must be received by LASFAC no later than January 15 immediately following the final deadline for receipt of the student's FAFSA or on-line application. For example, if a student's graduates from high school in May 2011, the final deadline for receipt of the student's FAFSA or on-line application is July 1, 2012, and the deadline for receipt of all documents relevant to establishing eligibility is January 15, 2013.

C.1. - E. …

AUTHORITY NOTE: Promulgated in accordance with R.S. 17:3021-3036, R.S. 17:3042.1 and R.S. 17:3048.1.

HISTORICAL NOTE: Promulgated by the Student Financial Assistance Commission, Office of Student Financial Assistance, LR 22:338 (May 1996), repromulgated LR 24:635 (April 1998), amended LR 24:1901 (October 1998), repromulgated LR 27:1847 (November 2001), amended LR 28:447 (March 2002), LR 30:1161 (June 2004), LR 30:1471 (July 2004), LR 30:2019 (September 2004), LR 32:2238 (December 2006), LR 33:2357 (November 2007), LR 34:1389 (July 2008), LR 34:1884 (September 2008), LR 36:312 (February 2010), LR 38:

§509. ACT Testing Deadline

A. - A.2. …

B.1. The student may substitute an equivalent score, as determined by the comparison tables used by LASFAC, on an equivalent SAT taken on or before the official April test date in the academic year (high school) in which the student graduates. In order to substitute a SAT score, the student must direct the college board to send the score to LOSFA so that the score is electronically reported to LOSFA by the college board within 45 days of the final test date allowed by §509. SAT scores received in any other manner shall not be considered.

2. An eligible non-graduate may substitute an equivalent score, as determined by the comparison tables used by LASFAC, on an equivalent SAT taken before the first day of the semester the student first enrolls in an eligible college or university. In order to substitute an SAT score, the student must direct the college board to send the score to LOSFA so that the score is electronically reported to LOSFA by the college board within 45 days of the final test date allowed by §509. SAT scores received in any other manner shall not be considered.

C. Final ACT Testing Deadline for Reduced Awards

1.a. Beginning with awards made to applicants graduating in academic year (high school) 2000 through

2003, if an applicant does not achieve a qualifying score on the ACT or on the SAT for the TOPS Opportunity Award by the April national ACT test date in the year of the applicant's high school graduation, then the applicant's first qualifying score for any TOPS Award obtained on an authorized testing date after the April national ACT test date in the year of the applicant's high school graduation but prior to July 1 of the year of such graduation will be accepted. However, when granting an award to an applicant whose qualifying test score is obtained on an authorized testing date after the date of the applicant's high school graduation but prior to July 1 of the year of such graduation, the applicant's period of eligibility for the award shall be reduced by one semester, two quarters, or an equivalent number of units at an eligible institution which operates on a schedule based on units other than semesters or quarters. Except for an applicant who has qualified for a TOPS-Tech Award on or prior to the April national ACT test date, an applicant will not be allowed to use a test score obtained after the April national ACT test date to upgrade a TOPS Award.

b.i. Beginning with awards made to applicants graduating in academic year (high school) 2004 through 2010, if an applicant does not achieve a qualifying score on the ACT or on the SAT for the TOPS Opportunity Award by the April national ACT test date in the year of the applicant's high school graduation, then the applicant's first qualifying score for any TOPS Award obtained on an authorized testing date after the April national ACT test date in the year of the applicant's high school graduation but prior to July 1 of the year of such graduation will be accepted. However, when granting an award to an applicant whose qualifying test score is obtained on an authorized testing date after the April national ACT test date in the year of the applicant's high school graduation but prior to July 1 of the year of such graduation, the applicant's period of eligibility for the award shall be reduced by one semester, two quarters, or an equivalent number of units at an eligible institution which operates on a schedule based on units other than semesters or quarters. Except for an applicant who has qualified for a TOPS-Tech Award on or prior to the April national ACT test date, an applicant will not be allowed to use a test score obtained after the April national ACT test date to upgrade a TOPS Award.

ii. Beginning with awards made to applicants graduating in academic year (high school) 2011, if an applicant does not achieve a qualifying score on the ACT or on the SAT for the TOPS Opportunity Award by the April national ACT test date in the year of the applicant's high school graduation, then the applicant's first qualifying score for any TOPS Award obtained on an authorized testing date after the April national ACT test date in the year of the applicant's high school graduation but prior to July 1 of the year of such graduation will be accepted or, if the commission determines that the applicant was prevented from taking the test prior to July 1 of the year of graduation due to circumstances beyond the immediate control of the student and attributable to the administration of the test, the applicant's first qualifying score for any TOPS Award obtained on an authorized testing date after the April national ACT test date in the year of the applicant's high school graduation but prior to October 1 of the year of such graduation will be accepted. However, when granting an award to an applicant whose qualifying test score is obtained on an authorized testing date after the April national ACT test date in the year of the applicant's high school graduation, the applicant's period of eligibility for the award shall be reduced by one semester, two quarters, or an equivalent number of units at an eligible institution which operates on a schedule based on units other than semesters or quarters. Except for an applicant who has qualified for a TOPS-Tech Award on or prior to the April national ACT test date, an applicant will not be allowed to use a test score obtained after the April national ACT test date to upgrade a TOPS Award.

c. For the purpose of the Subsection, the "April national ACT test date" shall be defined as the month of April.

d. Tests taken by an eligible non-graduate after the first day of the semester the student first enrolls in an eligible college or university shall not be accepted.

2.a. Beginning with applicants graduating in academic year (high school) 1997 through 2010, applicants who fail to achieve an ACT or SAT qualifying score prior to July 1 of the year of high school graduation shall not be considered for an award.

b. Beginning with applicants graduating in academic year (high school) 2011, applicants shall not be considered for an award if they fail to achieve a qualifying score on the ACT or on the SAT prior to July 1 of the year of high school graduation, or prior to October 1 of the year of high school graduation, if the commission determines that the applicant was prevented from taking the test prior to July 1 of the year of graduation due to circumstances beyond the immediate control of the student and attributable to the administration of the test.

D. - E. …

AUTHORITY NOTE: Promulgated in accordance with R.S. 17:3021-3036, R.S. 17:3042.1 and R.S. 17:3048.1.

HISTORICAL NOTE: Promulgated by the Student Financial Assistance Commission, Office of Student Financial Assistance, LR 26:1995 (September 2000), amended LR 26:2000 (September 2000), LR 27:36 (January 2001), LR 27:284 (March 2001), repromulgated LR 27:1847 (November 2001), amended LR 30:1161 (June 2004), LR 31:37 (January 2005), LR 38:

Chapter 7. Taylor Opportunity Program for Students (TOPS) Opportunity, Performance, and Honors Awards

§703. Establishing Eligibility

A. - A.4.a. …

b. if the student joins the United States Armed Forces within one year after graduating from an eligible Louisiana or an eligible non-Louisiana high school or from an eligible out of country high school, enroll not later than the semester, quarter or term, excluding summer semesters or sessions immediately following the one-year anniversary of the student's separation from active duty service, including all consecutive periods of reenlistment. Reenlistment at any time during the student's first enlistment shall be considered to be on or prior to the fifth anniversary of the date that the student graduated from high school; or

c. if the student is eligible under the provisions of §703.A.5.d or e, enroll not later than the semester or term, excluding summer semesters or sessions, immediately following the first anniversary of the date the student

completes the home study program, which is deemed to be May 31; or

d. if the student is eligible under the provisions of §703.A.5.d or e, and joins the United States Armed Forces within one year of completion of the 12th grade of an approved home study program, enroll not later than the semester, quarter or term, excluding summer semesters or sessions immediately following the one-year anniversary of the student's separation from active duty service, including all consecutive periods of reenlistment. Reenlistment at any time during the student's first enlistment shall be considered to be on or prior to the fifth anniversary of the date that the student graduated from high school; or

A.4.e. - J.4.b.ii.…

AUTHORITY NOTE: Promulgated in accordance with R.S. 17:3021-3025, R.S. 17:3042.1 and R.S. 17:3048.1.

HISTORICAL NOTE: Promulgated by the Student Financial Assistance Commission, Office of Student Financial Assistance, LR 22:338 (May 1996), repromulgated LR 24:636 (April 1998), amended LR 24:1902 (October 1998), LR 24:2237 (December 1998), LR 25:257 (February 1999), LR 25:655 (April 1999), LR 25:1794 (October 1999), LR 26:64, 67 (January 2000), LR 26:689 (April 2000), LR 26:1262 (June 2000), LR 26:1602 (August 2000), LR 26:1996, 1999, 2001 (September 2000), LR 26:2268 (October 2000), LR 26:2753 (December 2000), LR 27:36 (January 2001), LR 27:702 (May 2001), LR 27:1219, 1219 (August 2001), repromulgated LR 27:1850 (November 2001), amended LR 28:772 (April 2002), LR 28:2330, 2332 (November 2002), LR 29:125 (February 2003), LR 29:2372 (November 2003), LR 30:1162 (June 2004), LR 30:1471 (July 2004), LR 30:2019 (September 2004), LR 31:37 (January 2005), LR 31:2213 (September 2005), LR 31:3112 (December 2005), LR 32:2239 (December 2006), LR 33:435 (March 2007), LR 33:2357 (November 2007), LR 33:2612 (December 2007), LR 34:1389 (July 2008), LR 35:228 (February 2009), LR 36:312 (February 2010), LR 36:490 (March 2010), LR 36:2269 (October 2010), LR 36:2855 (December 2010), LR 37:2987 (October 2011), LR 38:354 (February 2012), LR 38:

§705. Maintaining Eligibility

A. - A.6.a.i…

ii. beginning in the 2008-2009 and through the 2010-2011 academic year (college), in an academic undergraduate program at an eligible college or university, by the end of each academic year (college), earn a total of at least 24 college credit hours as determined by totaling the earned hours reported by the institution for each semester or quarter in the academic year (college), including any hours earned during an intersession ending during the academic year or immediately following the spring term. These hours shall include remedial course work required by the institution, but shall not include hours earned during qualified summer sessions, summer sessions or intersessions that do not end during the academic year or intersessions that do not immediately follow the spring term or by advanced placement course credits. Unless granted an exception for cause by LASFAC, failure to earn the required number of hours will result in permanent cancellation of the recipient's eligibility; or

iii. beginning in the 2011-2012 academic year (college), in an academic undergraduate program at an eligible college or university, by the end of each academic year (college), earn a total of at least 24 college credit hours as determined by totaling the earned hours reported by the institution for each semester or quarter, intersession and summer session in the academic year (college) (includes any hours earned during any intersession and/or summer session ending before the following fall semester or quarter). These hours shall include remedial course work required by the institution and hours for repeated courses, but shall not include hours by advanced placement course credits, by credit by exam, or through the College-Level Examination Program. Unless granted an exception for cause by the Commission, failure to earn the required number of hours will result in permanent cancellation of the recipient's eligibility; or

b. in a program for a vocational or technical education certificate or diploma or a non-academic undergraduate degree at an eligible college or university, earn a total of at least 24 college credit hours as determined by totaling the earned hours reported by the institution for each semester or term in the program year (non-academic program). Unless granted an exception for cause by LASFAC, failure to earn the required number of hours will result in permanent cancellation of the recipient's eligibility; or

c. in an academic graduate or professional program at an eligible college or university, by the end of each academic year (college), earn at least the total college credit hours required by the college or university for full time enrollment for each semester or quarter as determined by totaling the earned hours reported by the institution for each semester or quarter, intersession and summer session in the academic year (college) (includes any hours earned during any intersession and/or summer session ending before the following fall semester or quarter). These hours shall not include hours by advanced placement course credits, by credit by exam, or through the College-Level Examination Program. Unless granted an exception for cause by LASFAC, failure to earn the required number of hours will result in permanent cancellation of the recipient's eligibility; or

6.d. - 9. …

B. Students failing to meet the requirements listed in §705.A.7 or §705.A.8.a, b, or c may have their tuition awards reinstated upon regaining *steady academic progress* (see §301) and/or attainment of the required GPA, if the period of ineligibility did not persist for more than two years from the date of loss of eligibility. Students who fail to meet the continuation requirements of 705.A.8.c, but who meet the continuation requirements of §705.A.8.a or b., shall no longer be eligible for the stipend authorized for the Performance and Honors Awards, but shall continue to receive the award amount for the Opportunity Award. If the two-year period is interrupted due to a student's active duty in the United States Armed Forces, the two-year period will be extended for a length of time equal to the student's active duty service.

C. - E.3. …

AUTHORITY NOTE: Promulgated in accordance with R.S. 17:3021-3036, R.S. 17:3042.1 and R.S. 17:3048.1.

HISTORICAL NOTE: Promulgated by the Student Financial Assistance Commission, Office of Student Financial Assistance, LR 22:338 (May 1996), repromulgated LR 24:637 (April 1998), amended LR 24:1904 (October 1998), LR 25:257 (February 1999), LR 25:656 (April 1999), LR 25:1091 (June 1999), LR 26:67 (January 2000), LR 26:688 (April 2000), LR 26:1996 (September 2000), LR 26:2001 (September 2000), repromulgated LR 27:1853 (November 2001), amended LR 28:447 (March 2002), LR 28:772 (April 2002), LR 28:2332 (November 2002), LR 29:2373 (November 2003), LR 30:781 (April 2004), LR 30:1163 (June

2004), LR 30:2019 (September 2004), LR 31:3115 (December 2005), LR 33:437 (March 2007) , LR 34:1390 (July 2008), LR 36:491 (March 2010), LR 36:2856 (December 2010), LR 38:

Chapter 8. TOPS-Tech Award

§803. Establishing Eligibility

A. - A.4.a. …

b.i. if the student joins the United States Armed Forces within one year after graduating from an eligible Louisiana or an eligible non-Louisiana high school or from an eligible out of country high school, enroll not later than the semester, quarter or term excluding summer semesters or sessions, immediately following the one-year anniversary of the student's separation from active duty service, including all consecutive periods of reenlistment. Reenlistment at any time during the student's first enlistment shall be considered to be on or prior to the fifth anniversary of the date that the student graduated from high school; or

c. if the student is eligible under the provisions of §803.A.5.d, enroll not later than the semester or term, excluding summer semesters or sessions, immediately following the first anniversary of the date the student completed the home study program, which is deemed to be May 31; or

d. i. if the student is eligible under the provisions of §803.A.5.d and has joined and is on active duty with the United States Armed Forces within one year of the date the student completed the home study program, which is deemed to be May 31, enroll not later than the semester, quarter or term, excluding summer semesters or sessions, immediately following the one-year anniversary of the student's separation from active duty service, including all consecutive periods of reenlistment. Reenlistment at any time during the student's first enlistment shall be considered to be on or prior to the fifth anniversary of the date that the student graduated from high school;; and

A.5. - B.4.b.ii. …

AUTHORITY NOTE: Promulgated in accordance with R.S. 17:3021-3025, R.S. 17:3042.1 and R.S. 17:3048.1.

HISTORICAL NOTE: Promulgated by the Student Financial Assistance Commission, Office of Student Financial Assistance, LR 24:1904 (October 1998), amended LR 24:2237 (December 1998), LR 25:1795 (October 1999), LR 26:65 and 67 (January 2000), LR 26:1602 (August 2000), LR 26:1997 (September 2000), LR 26:2269 (October 2000), LR 26:2754 (December 2000), LR 27:36 (January 2001), LR 27:1220 (August 2001), repromulgated LR 27:1854 (November 2001), amended LR 28:447 (March 2002), LR 28:773 (April 2002), LR 28:2330 (November 2002), LR 29:554 (April 2003), LR 30:1164 (June 2004), LR 30:2019 (September 2004), LR 31:39 (January 2005), LR 31:3114 (December 2005), LR 33:437 (March 2007), LR 33:2614 (December 2007), LR 35:230 (February 2009), LR 36:491 (March 2010), LR 36:2270 (October 2010), LR 36:2856 (December 2010), LR 38:

§805. Maintaining Eligibility

A. - A.8. …

B. Students failing to meet the requirements listed in §805.A.7 and 8 may have their tuition awards reinstated upon achieving steady academic progress, as defined in §301, and the attainment of the required grade point average, if the period of ineligibility did not persist for more than one year from the date of loss of eligibility. If the one-year period is interrupted due to a student's active duty in the United States Armed Forces, the one-year period will be extended for a length of time equal to the student's active duty service.

C. - D.3. …

AUTHORITY NOTE: Promulgated in accordance with R.S. 17:3021-3036, R.S. 17:3042.1 and R.S. 17:3048.1.

HISTORICAL NOTE: Promulgated by the Student Financial Assistance Commission, Office of Student Financial Assistance, LR 24:1905 (October 1998) amended LR 25:1091 (June 1999), LR 26:68 (January 2000), LR 26:689 (April 2000), LR 26:1997, 2002 (September 2000), repromulgated LR 27:1856 (November 2001), amended LR 28:774 (April 2002), LR 28:2332 (November 2002), LR 29:880 (June 2003), LR 29:2373 (November 2003), LR 30:781 (April 2004), LR 30:1165 (June 2004), LR 30:2019 (September 2004), LR 31:3115 (December 2005), LR 33:438 (March 2007), LR 35:1489 (August 2009), LR 38:

Chapter 21. Miscellaneous Provisions and Exceptions

§2103. Circumstances Warranting Exception to the Initial and Continuous Enrollment Requirements

A. - E.1.c. …

2. Physical Rehabilitation Program

a. Definition. The student/recipient is receiving rehabilitation in a program prescribed by a qualified medical professional and administered by a qualified medical professional.

b. Certification Requirements. The student/recipient must submit:

i. a completed exception request form including the reason for the rehabilitation, dates of absence from class, the necessity of withdrawing, dropping hours, etc., the semester(s) or number of days involved, and any other information or documents; and

ii. a written statement from a qualified medical professional confirming the student/recipient's rehabilitation, and the beginning and ending dates of the rehabilitation.

c. Maximum Length of Exception. Up to four consecutive semesters (six consecutive quarters) per occurrence.

3. Substance Abuse Rehabilitation Program

a. Definition. The student/recipient is receiving rehabilitation in a substance abuse program.

b. Certification Requirements. The student/recipient must submit:

i. a completed exception request form including official college transcripts, the reason for the rehabilitation, dates of absence from class, the necessity of withdrawing, dropping hours, etc., the semester(s) or number of days involved, and any other information or documents; and

ii. a written statement from a qualified professional confirming the student's rehabilitation and the beginning and ending dates of the rehabilitation.

c. Maximum Length of Exception. Up to two consecutive semesters (three consecutive quarters). This exception shall be available to a student only one time.

4.a. Temporary Disability—Student

i. Definition. The student/recipient is recovering from an accident, injury, illness or required surgery.

ii. Certification Requirements. The student/recipient must submit:

(a). a completed exception request form including official college transcripts, the reason for the disability, dates of absence from class, the necessity of withdrawing, dropping hours, etc., the semester(s) or number of days involved, and any other information or documents; and

(b). a written statement from a qualified professional of the existence of a temporary disability, the dates of treatment, and opinions as to the impact of the disability on the student's ability to attend school.

iii. Maximum Length of Exception—up to four consecutive semesters (six consecutive quarters).

b. Temporary Disability—Student/Recipient's Care of Immediate Family Member

i.(a) Definition. The student/recipient is providing continuous care to his/her immediate family member due to an accident, illness, injury or required surgery.

(b). An immediate family member is his/her spouse, dependent, parent, stepparent, custodian, or grandparent.

ii. Certification Requirements. The student/recipient must submit:

(a). a completed exception request form including official college transcripts, the reason for the disability, dates of absence from class, the necessity of withdrawing, dropping hours, etc., the semester(s) or number of days involved, and any other information or documents; and

(b). a written statement from a qualified professional of the existence of a temporary disability of the immediate family member, and the beginning and ending dates of the doctor's care; and

(c). a statement from a family member or a qualified professional confirming the care given by the student.

iii. Maximum Length of Exception - up to a maximum of two consecutive semesters (three consecutive quarters).

5. - 5.c. …

6. Exceptional Educational Opportunity

a. Definition. The student/recipient is enrolled in an internship, residency, cooperative work, or work/study program or a similar program that is related to the student's major or otherwise has an opportunity not specifically sponsored by the school attended by the student that, in the opinion of the student's academic dean, will enhance the student's education. Participation in one of the programs does not qualify as an exception to the initial enrollment requirement.

b. Certification Requirements. The student/recipient must submit:

i. a completed exception request form including official college transcripts; and

ii. a written statement from the college/school official that the applicant is a student at the school/college and that the program is offered or sponsored by the college/school, or a statement from the dean of the college or the dean's designee that the program is related to the student's major and will enhance the student's education. The statements must include the dates of leave of absence, the semester(s) or number of days involved, the beginning and ending dates of the program.

c. Maximum Length of Exception. Up to four semesters (six consecutive quarters) or required program of study.

7. Religious Commitment

a. Definition. The student/recipient is a member of a religious group that requires the student to perform certain activities or obligations which necessitate taking a leave of absence from school.

b. Certification Requirements. The student/recipient must submit:

i. a completed exception request form including official college transcripts, the necessity of withdrawing, dropping hours, etc., the semester(s) or number of days involved, and the length of the religious obligation; and

ii. a written statement from the religious group's governing official evidencing the requirement necessitating the leave of absence including dates of the required leave of absence.

c. Maximum Length of Exception. Up to five consecutive semesters (eight consecutive quarters).

8. - 8.c. …

9. Military Service

a. Definition. The student/recipient is in the United States Armed Forces Reserves or National Guard and is called on active duty status or is performing emergency state service with the National Guard or enlists or reenlists and enters on active duty as a member of the regular United States Armed Forces.

b. Certification Requirements. The student/recipient must submit:

i. a completed exception request form including official college transcripts, the dates of the required leave of absence, necessity of withdrawing, dropping hours, etc., the semester(s) or number of days involved, and the length of duty (beginning and ending dates); and

ii. a written certification from the military including the dates and location of active duty; or

iii. a copy of the military orders or other military documents confirming military service.

c. Maximum Length of Exception. Up to the length of the required active duty service period.

10. - 10.c. …

11. Exceptional Circumstances

a. Definition. The student/recipient has exceptional circumstances, other than those listed in §2103.E.1-10, which are beyond his immediate control and which necessitate full or partial withdrawal from, or non-enrollment in an eligible postsecondary institution.

i. The following situations are not exceptional circumstances:

(a). financial conditions related to a student's ability to meet his or her educational expenses are not a justified reason for failure to meet the hours or continuous enrollment requirement, because TOPS is a merit, rather than need-based award;

(b). dropping a course, failing a course, or withdrawing from school to protect the student's grade point average or because of difficulty with a course or difficulty arranging tutoring;

(c). not being aware of or understanding the requirements;

(d). assumption that advanced standing, or correspondence course work credited outside the academic year would be applied to the hours requirement;

(e). differing scholarship or award requirements for other programs, such as NCAA full-time enrollment requirements;

(f). voluntary withdrawal from school to move out-of-state or pursue other interests or activities;

(g). claims of receipt of advice that is contrary to these rules, public information promulgated by LOSFA, award letters, and the rights and responsibilities document that detail the requirements for full-time continuous enrollment;

(h). failure to provide or respond to a request for documentation within 30 days of the date of the request, unless additional time is requested in writing, LOSFA grants the request, and the requested documentation is provided within the additional time granted;

(i). an involuntary drop, suspension, or withdrawal from enrollment because of academics, scholastics, or failure to attend classes or to comply with institutional regulations;

(j). a suspension or expulsion for misconduct;

(k). an inability to register because of failure to satisfy financial obligations.

ii. All other situations will be assessed at the discretion of LOSFA and subject to appeal to the commission.

b. Certification Requirement. Submit a completed exception request form including a sworn affidavit from the student detailing the circumstances and including the official college transcripts and documentation necessary to support the request for reinstatement.

c. Maximum Length of Exception. Up to the number of semesters or quarters determined to be supported by the request for exception.

F. - G.5.b.iii. …

AUTHORITY NOTE: Promulgated in accordance with R.S. 17:3021-3025, R.S. 17:3042.1, R.S. 17:3048.1 and R.S. 17:3050.1-3050.4.

HISTORICAL NOTE: Promulgated by the Student Financial Assistance Commission, Office of Student Financial Assistance, LR 22:338 (May 1996), amended LR 23:1648 (December 1997), repromulgated LR 24:647 (April 1998), amended LR 24:1916 (October 1998), LR 26:1015 (May 2000), LR 26:2002 (September 2000), LR 27:36 (January 2001), repromulgated LR 27:1866 (November 2001), amended LR 27:1875 (November 2001), LR 28:46 (January 2002), LR 28:449 (March 2002), LR 28:775 (April 2002), LR 28:2330 and 2333 (November 2002), LR 29:126 (February 2003), LR 29:2373 (November 2003), LR 29:2373 (November 2003), LR 30:785 (April 2004), LR 30:1167 (June 2004), LR 31:1060 (May 2005), LR 33:440 (March 2007), LR 35:1233 (July 2009), LR 38:

§2107. Funding and Fees

A. Limitation of Terms Funded -Routine funding for all Scholarship and Grant Programs is limited to the fall, winter and spring school terms.

B. - D. …

AUTHORITY NOTE: Promulgated in accordance with R.S. 17:3021-3036, R.S. 17:3042.1 and R.S. 17:3048.1.

HISTORICAL NOTE: Promulgated by the Student Financial Assistance Commission, Office of Student Financial Assistance, LR 22:338 (May 1996), amended LR 23:1648 (December 1997), repromulgated LR 24:649 (April 1998), amended LR 24:1919 (October 1998), LR 26:1998 (September 2000), repromulgated LR 27:1869 (November 2001), amended LR 28:449 (March 2002), LR 28:777 (April 2002), LR 28:2333 (November 2002), LR 31:40 (January 2005), LR 38:

George Badge Eldredge
General Counsel

1208#007

DECLARATION OF EMERGENCY

Tuition Trust Authority
Office of Student Financial Assistance

START Savings Program (LAC 28:VI.107)

The Louisiana Tuition Trust Authority (LATTA) is exercising the emergency provisions of the Administrative Procedure Act [R.S. 49:953(B)] to amend rules of the Student Tuition Assistance and Revenue Trust (START Saving) Program (R.S. 17:3091 et seq.).

This Emergency Rule implements Act 658 of the 2012 Regular Session of Louisiana Legislature and provide that START Saving Program funds may be used at any college or university that is approved by the United States Secretary of Education.

The emergency rules are necessary to allow the Louisiana Office of Student Financial Assistance and educational institutions to effectively administer these programs. A delay in promulgating rules would have an adverse impact on the financial welfare of the eligible students and the financial condition of their families. LATTA has determined that this Emergency Rule is necessary in order to prevent imminent financial peril to the welfare of the affected students.

This Declaration of Emergency is effective on July 18, 2012, and shall remain in effect for the maximum period allowed under the Administrative Procedure Act. (ST13141E)

Title 28
EDUCATION
Part VI. Student Financial Assistance—Higher Education Savings
Chapter 1. General Provisions
Subchapter A. Tuition Trust Authority
§107. Applicable Definitions

A. Words and terms not otherwise defined in these rules shall have the meanings ascribed to such words and terms in this Section. Where the masculine is used in these rules, it includes the feminine, and vice versa; where the singular is used, it includes the plural, and vice versa:

* * *

Eligible Educational Institution, either—

a. a state college or university or a technical college or institute or an independent college or university located in this state that is approved by the U.S. Secretary of Education to participate in a program under Title IV of the Higher Education Act of 1965 (20 U.S.C. 1088), as amended; or

b. a public or independent college or a university located outside this state that is approved by the U.S. Secretary of Education to participate in a program under Title IV of the Higher Education Act of 1965 (20 U.S.C. 1088), as amended; or

c. a Louisiana licensed proprietary school, licensed pursuant to R.S. Chapter 24-A of Title 17, and any

subsequent amendments thereto and is eligible to participate in a program under Title IV of the Higher Education Act of 1965 (20 U.S.C. 1088), as amended.

* * *

AUTHORITY NOTE: Promulgated in accordance with R.S. 17:3091-3099.2.

HISTORICAL NOTE: Promulgated by the Tuition Trust Authority, Office of Student Financial Assistance, LR 23:712 (June 1997), amended LR 24:1268 (July 1998), LR 25:1794 (October 1999), LR 26:2260 (October 2000), LR 27:37 (January 2001), LR 27:1222 (August 2001), LR 27:1876 (November 2001), LR 28:450 (March 2002), LR 28:777 (April 2002), LR 28:2334 (November 2002), LR 29:556 (April 2003), LR 30:786 (April 2004), LR 30:1169 (June 2004), LR 30:2302 (October 2004), LR 31:639 (March 2005), LR 32:1433 (August 2006), LR 32:2240 (December 2006), LR 33:443 (March 2007), LR 34:1885 (September 2008), LR 35:1491 (August 2009), LR 38:

George Badge Eldredge
General Counsel

1208#008

DECLARATION OF EMERGENCY

Department of Environmental Quality
Office of the Secretary

Offset Requirements and Emission Reduction Credits Banking (LAC 33:III.504, 601, 603, 605, 607, 615 and 619) (AQ327E2)

In accordance with R.S. 49:953(B) of the Administrative Procedure Act, which allows the Department of Environmental Quality to use emergency procedures to establish Rules, and R.S. 30:2011 and 2054, which authorize the department to promulgate Rules and regulations, the secretary of the department hereby declares that an emergency action is necessary to ensure that the permitting thresholds in place prior to the redesignation of the Baton Rouge area to attainment of the 1997 ozone National Ambient Air Quality Standard (NAAQS) remain in place after the area's nonattainment designation under the 2008 ozone NAAQS becomes effective.

The Baton Rouge area (i.e., the parishes of Ascension, East Baton Rouge, Iberville, Livingston, and West Baton Rouge) was formerly designated as nonattainment with respect to the 1997 8-hour ozone NAAQS of 0.08 parts per million (ppm). As such, increases of NOX and VOC emissions were governed by nonattainment new source review (NNSR) procedures provided by LAC 33:III.504. Under NNSR, prior to the construction of a new major stationary source or a major modification of an existing major stationary source, an owner or operator must obtain offsets for significant increases in emissions of NOX and VOC in the form of emission reduction credits (ERC) banked in accordance with LAC 33:III.Chapter 6.

On November 30, 2011, the U.S. Environmental Protection Agency (EPA) redesignated the Baton Rouge area to attainment of the 1997 ozone NAAQS, effective December 30, 2011. At the same time, EPA approved LDEQ's ozone maintenance plan, which projected no net growth in point source NOX and VOC emissions in the five parish area through 2020. However, another ozone standard, with which the Baton Rouge area is not in compliance, was recently implemented.

On March 27, 2008, EPA lowered the primary ozone NAAQS from 0.08 ppm to 0.075 ppm. This standard became effective on May 27, 2008. However, on September 16, 2009, the agency announced it would reconsider the NAAQS and therefore delayed implementation of the new standard. On January 19, 2010, EPA proposed that the NAAQS should be set within the range of 0.060 to 0.070 ppm. Then, on September 2, 2011, President Obama "requested that Administrator Jackson withdraw the draft Ozone National Ambient Air Quality Standards." Since the ongoing review of the ozone NAAQS will not be completed for several years, the EPA is now moving ahead with certain required actions to implement the 2008 standard. One such action is to designate areas as either attainment, nonattainment, or unclassifiable.

Based on air quality data from 2008 – 2010, LDEQ recommended to EPA that East Baton Rouge Parish be designated as nonattainment. By letter dated December 9, 2011, EPA informed LDEQ that, in addition to East Baton Rouge, the agency intends "to designate as nonattainment the parishes of Ascension, Iberville, Livingston, and West Baton Rouge" and "plans to promulgate final ozone designations in spring of 2012." On May 21, 2012, EPA promulgated a Rule entitled "Air Quality Designations for the 2008 Ozone National Ambient Air Quality Standards." This Rule formally designated the five parishes as a "marginal" ozone nonattainment area, effective July 20, 2012.

Under the Clean Air Act, the major source threshold in marginal nonattainment areas is 100 tons per year (TPY) of NOx and/or VOC, and the major modification net emissions increase trigger value is 40 TPY of these same compounds. However, prior to the redesignation of the Baton Rouge area on December 30, 2011, these thresholds were set at 50 and 25 TPY, respectively.

Therefore, this Rule is necessary to ensure that the Baton Rouge area continues to make progress toward attainment of the 2008 ozone NAAQS and to mitigate increases of NOX and VOC emissions consistent with the area's approved ozone maintenance plan.

This Rule is also necessary to remove references to the 2005 Attainment Plan and Transport Demonstration SIP and the associated inventory comparisons from Chapter 6. Currently, if the ozone design value for the Baton Rouge area is above the NAAQS for ozone, Chapter 6 requires LDEQ to compare the current total point-source emissions inventory, as defined in LAC 33:III.605.A, to baseline inventory associated with the 2005 Attainment Plan and Transport Demonstration SIP. The outcome of this comparison is used to determine baseline emissions for calculating the surplus emission reduction. However, the 2005 Attainment Plan and Transport Demonstration SIP has since been superseded by the 1997 8-Hour Moderate SIP Revision (Redesignation Package), which was approved by EPA on November 30, 2011 (76 FR 74000). As such, the relationship between the current total point-source emissions inventory and the baseline inventory is no longer meaningful.

This Emergency Rule is effective on AUGUST 28, 2012, and shall remain in effect for a maximum of 120 days. The department has begun rulemaking to promulgate this regulation change. For more information concerning AQ327E2, you may contact the Air Permits Division at (225) 219-3147.

Adopted this 8th day of August, 2012.

Title 33
ENVIRONMENTAL QUALITY
Part III. Air

Chapter 5. Permit Procedures

§504. Nonattainment New Source Review (NNSR) Procedures and Offset Requirements in Specified Parishes

A. - A.1. …

2. The potential to emit of a stationary source shall be compared to the major stationary source threshold values listed in Subsection L, Table 1 of this Section to determine whether the source is major.

3. The emissions increase that would result from a proposed modification, without regard to project decreases, shall be compared to the trigger values listed in Subsection L, Table 1 of this Section to determine whether a calculation of the net emissions increase over the contemporaneous period must be performed.

a. - d. …

4. The net emissions increase shall be compared to the significant net emissions increase values listed in Subsection L, Table 1 of this Section to determine whether a nonattainment new source review must be performed.

A.5. - D.4. …

5. Emission offsets shall provide net air quality benefit, in accordance with offset ratios listed in Subsection L, Table 1 of this Section, in the area where the NAAQS for that pollutant is violated.

D.6. - F. …

1. Offsets shall be required at the ratio specified in Subsection L, Table 1 of this Section. All emission reductions claimed as offset credit shall be from decreases of the same regulated pollutant or pollutant class (e.g., VOC) for which the offset is required, except that direct PM2.5 emissions or emissions of PM2.5 precursors may be offset by reductions in direct PM2.5 emissions or emissions of any PM2.5 precursor, if such offsets comply with the interprecursor trading hierarchy and ratio established in the approved SIP for a particular nonattainment area.

F.2. - L. …

* * *

M. Offset Requirements in Specified Parishes. Except as provided in Paragraph M.4 of this Section, the provisions of this Subsection shall apply to stationary sources located in the parishes of Ascension, East Baton Rouge, Iberville, Livingston, and West Baton Rouge if the parish's designation with respect to the 8-hour national ambient air quality standard (NAAQS) for ozone is attainment, marginal nonattainment, or moderate nonattainment.

1. New Stationary Sources. The owner or operator of a new stationary source shall provide offsets for potential VOC and NOX emissions in excess of 50 tons per year.

2. Existing Stationary Sources

a. Consideration of the net emissions increase shall be triggered for any physical change or change in the method of operation that would increase emissions of VOC or NOX by 25 tons per year or more, without regard to any project decreases.

b. The owner or operator of an existing stationary source with a potential to emit 50 tons per year or more of VOC shall provide VOC offsets for each physical change or change in the method of operation that would result in a net emissions increase of 25 tons per year or more of VOC.

c. The owner or operator of an existing stationary source with a potential to emit 50 tons per year or more of NOX shall provide NOX offsets for each physical change or change in the method of operation that would result in a net emissions increase of 25 tons per year or more of NOX.

3. Offsets shall be required at a ratio of 1.1 to 1.

4. The provisions of this Subsection shall not apply to any new major stationary source or major modification as defined in Subsection K of this Section.

AUTHORITY NOTE: Promulgated in accordance with R.S. 30:2054.

HISTORICAL NOTE: Promulgated by the Department of Environmental Quality, Office of Air Quality and Radiation Protection, Air Quality Division, LR 19:176 (February 1993), repromulgated LR 19:486 (April 1993), amended LR 19:1420 (November 1993), LR 21:1332 (December 1995), LR 23:197 (February 1997), amended by the Office of Environmental Assessment, Environmental Planning Division, LR 26:2445 (November 2000), LR 27:2225 (December 2001), LR 30:752 (April 2004), amended by the Office of Environmental Assessment, LR 30:2801 (December 2004), amended by the Office of the Secretary, Legal Affairs Division, LR 31:2436 (October 2005), LR 31:3123, 3155 (December 2005), LR 32:1599 (September 2006), LR 33:2082 (October 2007), LR 34:1890 (September 2008), LR 37:1568 (June 2011), LR 38:1232 (May 2012), LR 38:

Chapter 6. Regulations on Control of Emissions through the Use of Emission Reduction Credits (ERC) Banking

§601. Purpose

A. This Chapter establishes the means of enabling stationary sources to identify and preserve or acquire emission reductions for New Source Review (NSR) offsets.

AUTHORITY NOTE: Promulgated in accordance with R.S. 30:2054.

HISTORICAL NOTE: Promulgated by the Department of Environmental Quality, Office of Air Quality and Radiation Protection, Air Quality Division, LR 20:874 (August 1994), amended by the Office of Environmental Assessment, Environmental Planning Division, LR 28:301 (February 2002), amended by the Office of the Secretary, Legal Affairs Division, LR 38:

§603. Applicability

A. Major stationary sources are subject to the provisions of this Chapter for the purpose of utilizing emission reductions as offsets in accordance with LAC 33:III.504. Minor stationary sources located in nonattainment areas may submit ERC applications for purposes of banking. Sources located in EPA-designated attainment areas may not participate in the emissions banking program. Any stationary point source at an affected facility is eligible to participate.

B. Notwithstanding Subsection A of this Section, sources located in the parishes of Ascension, East Baton Rouge,

Iberville, Livingston, and West Baton Rouge may participate in the emissions banking program for purposes of securing offsets where required by LAC 33:III.504.M.

AUTHORITY NOTE: Promulgated in accordance with R.S. 30:2054.

HISTORICAL NOTE: Promulgated by the Department of Environmental Quality, Office of Air Quality and Radiation Protection, Air Quality Division, LR 20:874 (August 1994), amended LR 24:2239 (December 1998), amended by the Office of Environmental Assessment, Environmental Planning Division, LR 25:1622 (September 1999), LR 28:301 (February 2002), amended by the Office of the Secretary, Legal Affairs Division, LR 33:2068 (October 2007), LR 38:

§605. Definitions

A. The terms used in this Chapter are defined in LAC 33:III.111 with the exception of those terms specifically defined as follows.

* * *

Bankable Emission Reductions—reductions of a criteria pollutant that meet the provisions of this Chapter at the time of review and approval.

* * *

Base Case Inventory—Repealed.

Base Line Inventory—Repealed.

* * *

Current Total Point-Source Emissions Inventory—Repealed.

* * *

Modeled Parishes—Repealed.

Offset—a legally enforceable reduction, approved by the department, in the rate of actual emissions from an existing stationary point source, which is used to compensate for a significant net increase in emissions from a new or modified stationary source in accordance with the requirements of LAC 33:III.504. To be valid, an offset must meet the definition of ERC.

* * *

AUTHORITY NOTE: Promulgated in accordance with R.S. 30:2054.

HISTORICAL NOTE: Promulgated by the Department of Environmental Quality, Office of Air Quality and Radiation Protection, Air Quality Division, LR 20:874 (August 1994), LR 25:1622 (September 1999), LR 26:2448 (November 2000), LR 28:301 (February 2002), amended by the Office of the Secretary, Legal Affairs Division, LR 33:2068 (October 2007), LR 34:1890 (September 2008), LR 37:3221 (November 2011), LR 38:

§607. Determination of Creditable Emission Reductions

A. - B.2. …

C. Procedures for Calculating the Surplus Emission Reduction. The following procedures shall be used in calculating the quantity of surplus air emission reductions.

1. Reserved.

2. - 3. …

4. Quantify Baseline Emissions. Baseline emissions shall be the lower of actual emissions or adjusted allowable emissions determined in accordance with Paragraph C.3 of this Section.

C.5. - D. …

AUTHORITY NOTE: Promulgated in accordance with R.S. 30:2054.

HISTORICAL NOTE: Promulgated by the Department of Environmental Quality, Office of Air Quality and Radiation Protection, Air Quality Division, LR 20:877 (August 1994), amended by the Office of Environmental Assessment, Environmental Planning Division, LR 25:1622 (September 1999), LR 28:302 (February 2002), amended by the Office of the Secretary, Legal Affairs Division, LR 32:1601 (September 2006), LR 33:2068 (October 2007), LR 38:

§615. Schedule for Submitting Applications

A. …

B. If a parish is designated as nonattainment by the EPA after January 1, 2012, applications for banking ERCs in such parish must be submitted by March 31 of the year following the effective date of the EPA designation.

C. - D. …

AUTHORITY NOTE: Promulgated in accordance with R.S. 30:2054.

HISTORICAL NOTE: Promulgated by the Department of Environmental Quality, Office of Air Quality and Radiation Protection, Air Quality Division, LR 20:878 (August 1994), amended LR 21:681 (July 1995), amended by the Office of Environmental Assessment, Environmental Planning Division, LR 25:1623 (September 1999), LR 26:486 (March 2000), LR 28:304 (February 2002), amended by the Office of the Secretary, Legal Affairs Division, LR 33:2068 (October 2007), LR 38:

§619. Emission Reduction Credit Bank

A. The department shall maintain a banking database that shall consist of a record of all information concerning applications, deposits, withdrawals, and transactions, as well as pertinent date(s) concerning such information. All data in the banking database shall be available to the public upon request.

B. - C. …

AUTHORITY NOTE: Promulgated in accordance with R.S. 30:2054.

HISTORICAL NOTE: Promulgated by the Department of Environmental Quality, Office of Air Quality and Radiation Protection, Air Quality Division, LR 20:879 (August 1994), amended by the Office of Environmental Assessment, Environmental Planning Division, LR 26:2449 (November 2000), LR 28:305 (February 2002), amended by the Office of the Secretary, Legal Affairs Division, LR 38:

Peggy M. Hatch
Secretary

1208#063

DECLARATION OF EMERGENCY

Department of Health and Hospitals
Bureau of Health Services Financing

Coordinated Care Network
(LAC 50:I.3103-3109, 3303, and 3307)

The Department of Health and Hospitals, Bureau of Health Services Financing amends LAC 50:I.3103-3109, §3303, and §3307 in the Medical Assistance Program as authorized by R.S. 36:254 and pursuant to Title XIX of the Social Security Act. This Emergency Rule is promulgated in accordance with the provisions of the Administrative Procedure Act, R.S. 49:953(B)(1) et seq., and shall be in effect for the maximum period allowed under the Act or until adoption of the final Rule, whichever occurs first.

The Department of Health and Hospitals, Bureau of Health Services Financing adopted provisions which implemented a coordinated system of care in the Medicaid Program designed to improve performance and health care outcomes through a healthcare delivery system called

coordinated care networks, also known as the BAYOU HEALTH Program (*Louisiana Register*, Volume 37, Number 6).

The department now proposes to amend the provisions of the June 20, 2011 Rule to revise the BAYOU HEALTH Program enrollment process to implement immediate auto-assignment of pregnant women whose Medicaid eligibility is limited to prenatal, delivery and post-partum services. Act 13 of the 2012 Regular Session of the Louisiana Legislature eliminated the CommunityCARE Program. This Emergency Rule also amends these provisions to align the BAYOU HEALTH Program with the directives of Act 13 by removing provisions relative to the former CommunityCARE Program.

This action is being taken to promote the health and welfare of pregnant women by ensuring their immediate access to quality health care services. It is anticipated that implementation of this Emergency Rule will result in programmatic savings to the state; however, the amount of savings is indeterminable for state fiscal year 2012-2013.

Effective August 1, 2012, the Department of Health and Hospitals, Bureau of Health Services Financing amends the provisions governing coordinated care network.

Title 50

PUBLIC HEALTH—MEDICAL ASSISTANCE

Part I. Administration

Subpart 3. Medicaid Coordinated Care

Chapter 31.Coordinated Care Network

§3103. Recipient Participation

A. - B.1.b.v. ...

NOTE: Repealed.

C. - D.1.j. ...

k. are enrolled in the Louisiana Health Insurance Premium Payment (LaHIPP) Program.

E. ...

AUTHORITY NOTE: Promulgated in accordance with R.S. 36:254 and Title XIX of the Social Security Act.

HISTORICAL NOTE: Promulgated by the Department of Health and Hospitals, Bureau of Health Services Financing, LR 37:1573 (June 2011), amended LR 38:

§3105. Enrollment Process

A. - D.1. ...

2. The CCN and its providers shall be required to register all births through the Louisiana Electronic Event Registration System (LEERS) administered by DHH/Vital Records Registry and complete any other Medicaid enrollment form required by DHH.

E. - E.1. ...

2. New recipients, excluding those whose Medicaid eligibility is predicated upon determination of pregnancy, shall be given no less than 30 calendar days from the postmark date of an enrollment form mailed by the enrollment broker to select a CCN and primary care provider (PCP).

a. ...

3. Pregnant recipients with Medicaid eligibility limited to prenatal, delivery, and post-partum services will immediately be automatically assigned to a CCN by the enrollment broker.

a. - d. Repealed.

4. The following provisions will be applicable for recipients who are mandatory or voluntary participants.

a. If there are two or more CCNs in a department designated service area in which the recipient resides, they shall select one.

b. If there is only one CCN in a department designated service area where the recipient resides, the recipient must choose either the CCN, Medicaid fee-for-service or an alternative Medicaid managed care program that coordinates care and which the department makes available in accordance with the promulgation of administrative rules.

c. Recipients who fail to make a selection will be automatically assigned to a participating CCN in their area.

d. Recipients may request to transfer out of the CCN for cause and the effective date of enrollment shall be no later than the first day of the second month following the calendar month that the request for disenrollment is filed.

F. Automatic Assignment Process

1. The following participants shall be automatically assigned to a CCN by the enrollment broker in accordance with the department's algorithm/formula and the provisions of §3105.E:

a. mandatory CCN participants that fail to select a CCN and voluntary participants that do not exercise their option not to participate in the CCN program within the minimum 30 day window;

b. pregnant women with Medicaid eligibility limited to prenatal care, delivery, and post-partum services; and

c. other recipients as determined by the department.

2. CCN automatic assignments shall take into consideration factors including, but not limited to:

a. the potential enrollee's geographic parish of residence;

b. assigning members of family units to the same CCN;

c. previous relationships with a Medicaid provider;

d. CCN capacity; and

e. CCN performance outcome indicators (when available).

3. Neither the MCO model nor the shared savings model will be given preference in making automatic assignments.

4. CCN automatic assignment methodology shall be available to recipients upon request to the enrollment broker prior to enrollment.

G. - G.2.a. …

b. selects a PCP within the CCN that has reached their maximum physician/patient ratio;

c. selects a PCP within the CCN that has restrictions/limitations (e.g. pediatric only practice); or

d. has been automatically assigned to the CCN due to eligibility limited to pregnancy-related services.

3. Members who do not proactively choose a PCP with a CCN will be automatically assigned to a PCP by the CCN. The PCP automatically assigned to the member shall be located within geographic access standards of the member's home and/or best meets the needs of the member. Members for whom a CCN is the secondary payor will not

be assigned to a PCP by the CCN, unless the members request that the CCN do so.

G.4. - H.1. …

I. Annual Open Enrollment

1. The department will provide an opportunity for all CCN members to retain or select a new CCN during an annual open enrollment period. Prior to the annual open enrollment period, each CCN member shall receive information and the offer of assistance with making informed choices about CCNs in their area and the availability of choice counseling.

2 - 3. ...

AUTHORITY NOTE: Promulgated in accordance with R.S. 36:254 and Title XIX of the Social Security Act.

HISTORICAL NOTE: Promulgated by the Department of Health and Hospitals, Bureau of Health Services Financing, LR 37:1574 (June 2011), amended LR 38:

§3107. Disenrollment and Change of Coordinated Care Network

A. - F.1.j. ...

k. member enrolls in the Louisiana Health Insurance Premium Payment (LaHIPP) Program.

G. - G.2. ...

AUTHORITY NOTE: Promulgated in accordance with R.S. 36:254 and Title XIX of the Social Security Act.

HISTORICAL NOTE: Promulgated by the Department of Health and Hospitals, Bureau of Health Services Financing, LR 37:1575 (June 2011), amended LR 38:

§3109. Member Rights and Responsibilities

A. - A.11. ...

B. Members shall have the freedom to exercise the rights described herein without any adverse effect on the member's treatment by the department or the CCN, or its contractors or providers.

C. - C.8. ...

AUTHORITY NOTE: Promulgated in accordance with R.S. 36:254 and Title XIX of the Social Security Act.

HISTORICAL NOTE: Promulgated by the Department of Health and Hospitals, Bureau of Health Services Financing, LR 37:1576 (June 2011), amended LR 38:

Chapter 33. Coordinated Care Network Shared Savings Model

§3303. Shared Savings Model Responsibilities

A. - R.4. ...

a. immediately notifying the department if he or she has a Workman's Compensation claim, a pending personal injury or medical malpractice law suit, or has been involved in an auto accident;

R.4.b. - T.3. ...

AUTHORITY NOTE: Promulgated in accordance with R.S. 36:254 and Title XIX of the Social Security Act.

HISTORICAL NOTE: Promulgated by the Department of Health and Hospitals, Bureau of Health Services Financing, LR 37:1578 (June 2011), amended LR 38:

§3307. Reimbursement Methodology

A. - C. ...

1. The CCN-S may reimburse the PCP a monthly base case management fee for each enrollee assigned to the PCP.

2. …

3. - 3.b. Repealed.

D. - F. ...

1. The reconciliation shall compare the actual aggregate cost of authorized/preprocessed services as specified in the contract and include the enhanced primary care case management fee for dates of services in the reconciliation period, to the aggregate per capita prepaid benchmark (PCPB).

2. - 5.c. ...

6. In the event the CCN-S exceeds the PCPB in the aggregate (for the entire CCN-S enrollment) as calculated in the final reconciliation, the CCN-S will be required to refund up to 50 percent of the total amount of the enhanced primary care case management fees paid to the CCN-S during the period being reconciled.

7. ...

a. Due to federally mandated limitations under the Medicaid State Plan, shared savings will be limited to five percent of the actual aggregate costs including the enhanced primary care case management fees paid. Such amounts shall be determined in the aggregate and not for separate enrollment types.

b. Repealed.

8. ...

AUTHORITY NOTE: Promulgated in accordance with R.S. 36:254 and Title XIX of the Social Security Act.

HISTORICAL NOTE: Promulgated by the Department of Health and Hospitals, Bureau of Health Services Financing, LR 37:1581 (June 2011), amended LR 38:

Implementation of the provisions of this Rule may be contingent upon the approval of the U.S. Department of Health and Human Services, Centers for Medicare and Medicaid Services (CMS), if it is determined that submission to CMS for review and approval is required.

Interested persons may submit written comments to J. Ruth Kennedy, Bureau of Health Services Financing, P.O. Box 91030, Baton Rouge, LA 70821-9030. She is responsible for responding to inquiries regarding this Emergency Rule. A copy of this Emergency Rule is available for review by interested parties at parish Medicaid offices.

Bruce D. Greenstein
Secretary

1208#018

DECLARATION OF EMERGENCY

Department of Health and Hospitals
Bureau of Health Services Financing

Disproportionate Share Hospital Payments
Distinct Part Psychiatric Units
Payment Methodology
(LAC 50:V.2709)

The Department of Health and Hospitals, Bureau of Health Services Financing amends LAC 50:V.2709 in the Medical Assistance Program as authorized by R.S. 36:254 and pursuant to Title XIX of the Social Security Act. This Emergency Rule is promulgated in accordance with the provisions of the Administrative Procedure Act, R.S. 49:953(B)(1) et seq., and shall be in effect for the maximum period allowed under the Act or until adoption of the final Rule, whichever occurs first.

The Department of Health and Hospitals, Office of the Secretary, Bureau of Health Services Financing adopted provisions for the reimbursement of uncompensated care costs for psychiatric services provided by non-state acute

care hospitals that expand their distinct part psychiatric units and enter into an agreement with the Office of Mental Health (OMH), and established provisions for disproportionate share hospital (DSH) payments to non-state acute care hospitals that enroll a new distinct part psychiatric unit and enter into an agreement with OMH (*Louisiana Register*, Volume 34, Number 8). The department promulgated an Emergency Rule which amended the provisions governing DSH payments to non-state distinct part psychiatric units that enter into a cooperative endeavor agreement with the department's Office of Behavioral Health (*Louisiana Register*, Volume 38, Number 2). The department promulgated an Emergency Rule which amended the February 10, 2012 Emergency Rule to clarify the provisions for the qualifying hospitals (*Louisiana Register*, Volume 38, Number 5). This Emergency Rule is being promulgated to continue the provisions of the May 20, 2012 Emergency Rule. This action is being taken to avoid a budget deficit in the medical assistance programs.

Effective September 18, 2012, the Department of Health and Hospitals, Bureau of Health Services Financing amends the provisions governing disproportionate share hospital payments to distinct part psychiatric units.

TITLE 50
PUBLIC HEALTH–MEDICAL ASSISTANCE
Part V. Hospital Services
Subpart 3. Disproportionate Share Hospital Payments
Chapter 27. Qualifying Hospitals
§2709. Distinct Part Psychiatric Units

A. Effective for dates of service on or after February 10, 2012, a Medicaid enrolled non-state acute care hospital that enters into a Cooperative Endeavor Agreement (CEA) with the Department of Health and Hospitals, Office of Behavioral Health to provide inpatient psychiatric hospital services to Medicaid and uninsured patients, and which also assumes the operation and management of a state-owned and formerly state-operated hospital distinct part psychiatric unit, shall be paid a per diem rate of $581.11 per day for each uninsured inpatient.

B. Qualifying hospitals must submit costs and patient specific data in a format specified by the Department.

1. Cost and lengths of stay will be reviewed for reasonableness before payments are made.

C. Payments shall be made on a quarterly basis.

D. - F. Repealed.

AUTHORITY NOTE: Promulgated in accordance with R.S. 36:254 and Title XIX of the Social Security Act.

HISTORICAL NOTE: Promulgated by the Department of Health and Hospitals, Office of the Secretary, Bureau of Health Services Financing, LR 34:1627 (August 2008), amended by the Department of Health and Hospitals, Bureau of Health Services Financing, LR 38:

Implementation of the provisions of this Rule may be contingent upon the approval of the U.S. Department of Health and Human Services, Centers for Medicare and Medicaid Services (CMS), if it is determined that submission to CMS for review and approval is required.

Interested persons may submit written comments to J. Ruth Kennedy, Bureau of Health Services Financing, P.O. Box 91030, Baton Rouge, LA 70821-9030. She is responsible for responding to all inquiries regarding this Emergency Rule. A copy of this Emergency Rule is available for review by interested parties at parish Medicaid offices.

Bruce D. Greenstein
Secretary

1208#102

DECLARATION OF EMERGENCY

Department of Health and Hospitals
Bureau of Health Services Financing

Disproportionate Share Hospital Payments
Low Income and Needy Care Collaboration
(LAC 50:V.2503 and 2713)

The Department of Health and Hospitals, Bureau of Health Services Financing amends LAC 50:V.2503 and adopts §2713 in the Medical Assistance Program as authorized by R.S. 36:254 and pursuant to Title XIX of the Social Security Act. This Emergency Rule is promulgated in accordance with the provisions of the Administrative Procedure Act, R.S. 49:953(B)(1) et seq., and shall be in effect for the maximum period allowed under the Act or until adoption of the final Rule, whichever occurs first.

The Department of Health and Hospitals, Office of the Secretary, Bureau of Health Services Financing repromulgated all of the Rules governing the disproportionate share hospital (DSH) payment methodology in LAC 50:V.Chapters 25 and 27 *(Louisiana Register*, Volume 34, Number 4). The department amended the provisions governing disproportionate share hospital payments to provide for a supplemental payment to hospitals that enter into an agreement with a state or local governmental entity for the purpose of providing healthcare services to low income and needy patients (*Louisiana Register*, Volume 36, Number 1). The department promulgated an Emergency Rule which amended the provisions of the January 20, 2010 Emergency Rule to revise the participation requirements for the Low Income and Needy Care Collaboration (*Louisiana Register*, Volume 37, Number 1). This Emergency Rule is being promulgated to continue the provisions of the January 1, 2011 Emergency Rule. This action is being taken to secure new federal funding and to promote the public health and welfare of uninsured individuals by assuring that hospitals are adequately reimbursed for furnishing uncompensated care.

Effective August 28, 2012, the Department of Health and Hospitals, Bureau of Health Services Financing amends the provisions governing disproportionate share hospital payments.

Title 50
PUBLIC HEALTH–MEDICAL ASSISTANCE
Part V. Hospital Services
Subpart 3. Disproportionate Share Hospital Payments
Chapter 25. Disproportionate Share Hospital Payment Methodologies
§2503. Disproportionate Share Hospital Qualifications

A. - A.5. ...

6. effective September 15, 2006, be a non-rural community hospital as defined in §2701.A.;

7. effective January 20, 2010, be a hospital participating in the Low Income and Needy Care Collaboration as defined in §2713.A.; and

8. effective July 1, 1994, must also have a Medicaid inpatient utilization rate of at least 1 percent.

AUTHORITY NOTE: Promulgated in accordance with R.S. 36:254 and Title XIX of the Social Security Act.

HISTORICAL NOTE: Promulgated by the Department of Health and Hospitals, Office of the Secretary, Bureau of Health Services Financing, LR 34:655 (April 2008), amended by the Department of Health and Hospitals, Bureau of Health Services Financing, LR 38:

Chapter 27. Qualifying Hospitals

§2713. Low Income and Needy Care Collaboration

A. Definitions

Low Income and Needy Care Collaboration Agreement—an agreement between a hospital and a state or local governmental entity to collaborate for purposes of providing healthcare services to low income and needy patients.

B. In order to qualify under this DSH category in any period, a hospital must be party to a Low Income and Needy Care Collaboration Agreement with the Department of Health and Hospitals in that period.

C. DSH payments to Low Income and Needy Care Collaborating Hospitals shall be calculated as follows.

1. In each quarter, the department shall divide hospitals qualifying under this DSH category into two pools. The first pool shall include hospitals that, in addition to qualifying under this DSH category, also qualify for DSH payments under any other DSH category. Hospitals in the first pool shall be eligible to receive DSH payments under §2713.C.2 provisions. The second pool shall include all other hospitals qualifying under this DSH category. Hospitals in the second pool shall be eligible to receive DSH payments under §2713.C.3 provisions.

2. In each quarter, to the extent the department appropriates funding to this DSH category, hospitals that qualify under the provisions of §2713.C.2 shall receive 100 percent of the total amount appropriated by the department for this DSH category.

a. If the net uncompensated care costs of these hospitals exceed the amount appropriated for this pool, payment shall be made based on each hospital's pro rata share of the pool.

i. The pro rata share shall be calculated by dividing the hospital's net uncompensated care costs by the total of the net uncompensated care costs for all hospitals qualifying under §2713.C.2 and multiplying by the amount appropriated by the department.

b. If the amount appropriated for this DSH category exceeds the net uncompensated care costs of all hospitals qualifying under §2713.C.2, payment shall be made up to each hospital's net uncompensated care costs.

c. Any amount available after all distributions are made under §2713.C.2 provisions shall be distributed subject to the provisions in §2713.C.3.

3. In each quarter, to the extent distributions are available, and after all distributions are made under §2713.C.2 provisions, distributions under §2713.C.3 provisions shall be made according to the following terms.

a. If the net uncompensated care costs of all hospitals qualifying for payment under §2713.C.3 provisions exceed the amount available for this pool, payment shall be made based on each hospital's pro rata share of the pool.

i. The pro rata share shall be calculated by dividing its net uncompensated care costs by the total of the net uncompensated care costs for all hospitals qualifying under §2713.C.3.

b. If the amount available for payments under §2713.C.3 exceeds the net uncompensated care costs of all qualifying hospitals, payments shall be made up to each hospital's net uncompensated care costs and the remaining amount shall be used by the department to make disproportionate share payments under this DSH category in future quarters.

D. In the event it is necessary to reduce the amount of disproportionate share payments under this DSH category to remain within the federal disproportionate share allotment in any quarter, the department shall calculate a pro rata decrease for each hospital qualifying under the provisions of §2713.C.3.

1. The pro rata decrease shall be based on a ratio determined by:

a. dividing that hospital's DSH payments by the total DSH payments for all hospitals qualifying under §2713.C.3 in that quarter; and

b. multiplying the amount of DSH payments calculated in excess of the federal disproportionate share allotment.

2. If necessary in any quarter, the department will reduce Medicaid DSH payments under these provisions to zero for all applicable hospitals.

E. After the reduction in §2713.D has been applied, if it is necessary to further reduce the amount of DSH payments under this DSH category to remain within the federal disproportionate share allotment in any quarter, the department shall calculate a pro rata decrease for each hospital qualifying under §2713.C.2.

1. The pro rata decrease shall be based on a ratio determined by:

a. dividing that hospital's DSH payments by the total DSH payments for all hospitals qualifying under §2713.C.2 in that quarter; and

b. multiplying the amount of DSH payments calculated in excess of the federal disproportionate share allotment.

2. If necessary in any quarter, the department shall reduce Medicaid DSH payments under these provisions to zero for all applicable hospitals.

F. Qualifying hospitals must submit costs and patient specific data in a format specified by the department. Costs and lengths of stay will be reviewed for reasonableness before payments are made.

G. Payments shall be made on a quarterly basis, however, each hospital's eligibility for DSH and net uncompensated care costs shall be determined on an annual basis.

H. Payments to hospitals qualifying under this DSH category shall be made subsequent to any DSH payments for which a hospital is eligible under another DSH category.

I. Aggregate DSH payments for hospitals that receive payment from this category, and any other DSH category, shall not exceed the hospital's specific DSH limit. If payments calculated under this methodology would cause a

hospital's aggregate DSH payment to exceed the limit, the payment from this category shall be capped at the hospital's specific DSH limit. The remaining payments shall be redistributed to the other hospitals in accordance with these provisions.

J. If the amount appropriated for this DSH category exceeds the specific DSH limits of all qualifying hospitals, payment will be made up to each hospital's specific DSH limit and the remaining amount shall be used by the department to make disproportionate share payments under this DSH category in future quarters.

K. Effective for dates of service on or after January 1, 2011, all parties that participate in Medicaid DSH payments under this Section, either as a qualifying hospital by receipt of Medicaid DSH payments or as a state or local governmental entity funding Medicaid DSH payments, must meet the following conditions during the period of their participation:

1. Each participant must comply with the prospective conditions of participation in the Louisiana Private Hospital Upper Payment Limit Supplemental Reimbursement Program.

2. A participating hospital may not make a cash or in-kind transfer to their affiliated governmental entity that has a direct or indirect relationship to Medicaid payments and would violate federal law.

3. A participating governmental entity may not condition the amount it funds the Medicaid Program on a specified or required minimum amount of low income and needy care.

4. A participating governmental entity may not assign any of its contractual or statutory obligations to an affiliated hospital.

5. A participating governmental entity may not recoup funds from an affiliated hospital that has not adequately performed under the Low Income and Needy Care Collaboration Agreement.

6. A participating hospital may not return any of the Medicaid DSH payments it receives under this Section to the governmental entity that provides the non-federal share of the Medicaid DSH payments.

7. A participating governmental entity may not receive any portion of the Medicaid DSH payments made to a participating hospital under this Section.

L. Each participant must certify that it complies with the requirements of §2713.K by executing the appropriate certification form designated by the department for this purpose. The completed form must be submitted to the Department of Health and Hospitals, Bureau of Health Services Financing.

M. Each qualifying hospital must submit a copy of its Low Income and Needy Care Collaboration Agreement to the department.

N. The Medicaid DSH payments authorized in LAC 50:V.Subpart 3 shall not be considered as interim Medicaid inpatient payments in the determination of cost settlement amounts for inpatient hospital services rendered by children's specialty hospitals.

AUTHORITY NOTE: Promulgated in accordance with R.S. 36:254 and Title XIX of the Social Security Act.

HISTORICAL NOTE: Promulgated by the Department of Health and Hospitals, Bureau of Health Services Financing, LR 38:

Interested persons may submit written comments to J. Ruth Kennedy, Bureau of Health Services Financing, P.O. Box 91030, Baton Rouge, LA 70821-9030. She is responsible for responding to all inquiries regarding this Emergency Rule. A copy of this Emergency Rule is available for review by interested parties at parish Medicaid offices.

Bruce D. Greenstein
Secretary

1208#103

DECLARATION OF EMERGENCY

Department of Health and Hospitals
Bureau of Health Services Financing

Disproportionate Share Hospital Payments
Small Rural Hospitals—Qualifying Criteria
(LAC 50.V.2705)

The Department of Health and Hospitals, Bureau of Health Services Financing amends LAC 50:V.2705 in the Medical Assistance Program as authorized by R.S. 36:254 and pursuant to Title XIX of the Social Security Act. This Emergency Rule is promulgated in accordance with the provisions of the Administrative Procedure Act, R.S. 49:953(B)(1) et seq., and shall be in effect for the maximum period allowed under the Act or until adoption of the final Rule, whichever occurs first.

The Department of Health and Hospitals, Office of the Secretary, Bureau of Health Services Financing repromulgated all of the Rules governing the disproportionate share hospital (DSH) payment methodology in LAC 50:V.Chapters 25 and 27 (*Louisiana Register*, Volume 34, Number 4).

Act 147 of the 2010 Regular Session of the Louisiana Legislature redefined the qualifying criteria for rural hospitals. In compliance with Act 147, the department now proposes to amend the provisions governing DSH payments to small rural hospitals in order to redefine the qualifying criteria. This action is being taken to promote the public health and welfare of uninsured individuals to ensure their continued access to health care by assuring that hospitals are adequately reimbursed for furnishing uncompensated care. It is estimated that this Emergency Rule will have no fiscal impact in state fiscal year 2012-2013.

Effective September 1, 2012, the Department of Health and Hospitals, Bureau of Health Services Financing amends the provisions governing disproportionate share hospital payments to small-rural hospitals.

Title 50
PUBLIC HEALTH—MEDICAL ASSISTANCE
Part V. Hospital Services
Subpart 3. Disproportionate Share Hospital Payments
Chapter 27. Qualifying Hospitals
§2705. Small-Rural Hospitals

A. Definitions

* * *

Small Rural Hospital—a hospital (excluding a long-term care hospital, rehabilitation hospital, or freestanding psychiatric hospital but including distinct part psychiatric units) that meets the following criteria:

a. - l.i. …

ii. in a parish with a population of less than 15,800 as measured by the 2000 census; or

m. has no more than 60 hospital beds as of November 1, 2013 and is located:

i. as measured by the 2000 census, in a municipality with a population of less than 33,000;

ii. as measured by the 2000 census, in a parish with a population of less than 68,000; and

iii. within 3 miles of Jackson Barracks.

AUTHORITY NOTE: Promulgated in accordance with R.S. 36:254 and Title XIX of the Social Security Act.

HISTORICAL NOTE: Promulgated by the Department of Health and Hospitals, Office of the Secretary, Bureau of Health Services Financing, LR 34:655 (April 2008), amended LR 34:2402 (November 2008), amended by the Department of Health and Hospitals, Bureau of Health Services Financing, LR 38:

Implementation of the provisions of this Rule may be contingent upon the approval of the U.S. Department of Health and Human Services, Center for Medicaid Services (CMS) if it is determined that submission to CMS for review and approval is required.

Interested persons may submit written comments to J. Ruth Kennedy, Bureau of Health Services Financing, P.O. Box 91030, Baton Rouge, LA 70821-9030. She is responsible for responding to all inquiries regarding this Emergency Rule. A copy of this Emergency Rule is available for review by interested parties at parish Medicaid offices.

Bruce D. Greenstein
Secretary

1208#094

DECLARATION OF EMERGENCY

Department of Health and Hospitals
Bureau of Health Services Financing

Federally Qualified Health Centers
Fluoride Varnish Applications
(LAC 50:XI.10301 and 10701)

The Department of Health and Hospitals, Bureau of Health Services Financing amends LAC 50:XI.10301 and §10701 in the Medical Assistance Program as authorized by R.S. 36:254 and pursuant to Title XIX of the Social Security Act. This Emergency Rule is promulgated in accordance with the provisions of the Administrative Procedure Act, R.S. 49:953(B)(1) et seq., and shall be in effect for the maximum period allowed under the Act or until adoption of the final Rule, whichever occurs first.

The Department of Health and Hospitals, Bureau of Health Services Financing amended the provisions governing federally qualified health centers (FQHCs) to provide Medicaid reimbursement for diabetes self-management training services and to reorganize the existing provisions governing provider participation and services in a more clear and concise manner in the *Louisiana Administrative Code* (*Louisiana Register*, Volume 37, Number 9). The department published an Emergency Rule which amended the September 20, 2011 Rule to adopt provisions for the coverage of fluoride varnish application services rendered to Medicaid recipients (*Louisiana Register* Volume 37, Number 11). The department promulgated an Emergency Rule which amended the December 1, 2011 Emergency Rule to clarify the provisions governing the scope of services for fluoride varnish applications (*Louisiana Register*, Volume 38, Number 1). This Emergency Rule is being promulgated to continue the provisions of the January 20, 2012 Emergency Rule. This action is being taken to promote the health and welfare of Medicaid recipients.

Effective September 18, 2012, the Department of Health and Hospitals, Bureau of Health Services Financing amends the provisions governing federally qualified health centers.

Title 50
PUBLIC HEALTH-MEDICAL ASSISTANCE
Part XI. Clinic Services
Subpart 13. Federally-Qualified Health Centers
Chapter 103. Services
§10301. Scope of Services

A. - B.1. ...

C. Effective December 1, 2011, the department shall provide coverage for fluoride varnish applications performed in the FQHC. This service shall be limited to recipients from six months through five years of age. Fluoride varnish applications may be covered once every six months per Medicaid recipient.

1. Fluoride varnish applications shall be reimbursed when performed in the FQHC by:

a. the appropriate dental providers;
b. physicians;
c. physician assistants;
d. nurse practitioners;
e. registered nurses; or
f. licensed practical nurses.

2. All participating staff shall review the Smiles for Life training module for fluoride varnish and successfully pass the post assessment. All staff involved in the varnish application must be deemed as competent to perform the service by the FQHC.

AUTHORITY NOTE: Promulgated in accordance with R.S. 36:254 and Title XIX of the Social Security Act.

HISTORICAL NOTE: Promulgated by the Department of Health and Hospitals, Office of the Secretary, Bureau of Health Services Financing, LR 30:2328 (October 2004), repromulgated LR 30:2487 (November 2004), amended LR 32:1901 (October 2006), amended by the Department of Health and Hospitals, Bureau of Health Services Financing, LR 37:2927 (September 2011), LR 38:

Chapter 107. Reimbursement Methodology
§10701. Prospective Payment System

A. - B.3.a. …

4. Effective for dates of service on or after December 1, 2011, the Medicaid Program shall include coverage for fluoride varnish applications in the FQHC encounter rate.

a. Fluoride varnish applications shall only be reimbursed to the FQHC when performed on the same date of service as an office visit or preventative screening. Separate encounters for fluoride varnish services are not permitted and the application of fluoride varnish does not constitute an encounter visit.

C. - F. …

AUTHORITY NOTE: Promulgated in accordance with R.S. 36:254 and Title XIX of the Social Security Act.

HISTORICAL NOTE: Promulgated by the Department of Health and Hospitals, Office of the Secretary, Bureau of Health Services Financing, LR 32:1902 (October 2006), amended by the

Department of Health and Hospitals, Bureau of Health Services Financing, LR 37:2630 (September 2011), LR 38:

Implementation of the provisions of this Rule may be contingent upon the approval of the U.S. Department of Health and Human Services, Centers for Medicare and Medicaid Services (CMS), if it is determined that submission to CMS for review and approval is required.

Interested persons may submit written comments to J. Ruth Kennedy, Bureau of Health Services Financing, P.O. Box 91030, Baton Rouge, LA 70821-9030. She is responsible for responding to inquiries regarding this Emergency Rule. A copy of this Emergency Rule is available for review by interested parties at parish Medicaid offices.

Bruce D. Greenstein
Secretary

1208#104

DECLARATION OF EMERGENCY

Department of Health and Hospitals
Bureau of Health Services Financing
and
Office for Citizens with Developmental Disabilities

Home and Community-Based Services Waivers
Children's Choice Allocation of Waiver Opportunities
(LAC 50:XXI.11107)

The Department of Health and Hospitals, Bureau of Health Services Financing and the Office for Citizens with Developmental Disabilities amend LAC 50:XXI.11107 in the Medical Assistance Program as authorized by R.S. 36:254 and pursuant to Title XIX of the Social Security Act. This Emergency Rule is promulgated in accordance with the provisions of the Administrative Procedure Act, R.S. 49:953(B)(1) et seq., and shall be in effect for the maximum period allowed under the Act or until adoption of the final Rule, whichever occurs first.

The Department of Health and Hospitals, Bureau of Health Services Financing and the Office for Citizens with Developmental Disabilities adopted provisions in the Children's Choice Waiver for the allocation of additional waiver opportunities for the Money Follows the Person Rebalancing Demonstration Program (*Louisiana Register*, Volume 35, Number 9). The department promulgated an Emergency Rule which amended the provisions of the Children's Choice Waiver to provide for the allocation of waiver opportunities for children who have been identified by the Office for Citizens with Developmental Disabilities regional offices and human services authorities and districts as meeting state-funded family support criteria for priority level 1 and 2, and needing more family support services than what is currently available through state-funded family support services (*Louisiana Register*, Volume 36, Number 9). This Emergency Rule is being promulgated to continue the provisions of the September 20, 2010 Emergency Rule. This action is being taken to secure enhanced federal funding.

Effective September 15, 2012, the Department of Health and Hospitals, Bureau of Health Services Financing and the Office for Citizens with Developmental Disabilities amend the provisions governing the allocation of opportunities in the Children's Choice Waiver.

Title 50
PUBLIC HEALTH—MEDICAL ASSISTANCE
Part XXI. Home and Community-Based Services Waivers
Subpart 9. Children's Choice
Chapter 111. General Provisions
§11107. Allocation of Waiver Opportunities

A. The order of entry in the Children's Choice Waiver is first come, first served from a statewide list arranged by date of application for the Developmental Disabilities Request for Services Registry for the New Opportunities Waiver. Families shall be given a choice of accepting an opportunity in the Children's Choice Waiver or remaining on the DDRFSR for the NOW.

1. The only exceptions to the first come, first served allocation of waiver opportunities shall be for the:

a. Money Follows the Person Rebalancing Demonstration waiver opportunities which are allocated to demonstration participants only; and

b. waiver opportunities which are allocated to children who have been determined to need more services than what is currently available through state funded family support services.

B. - B.1.b. ...

C. Four hundred twenty-five opportunities shall be designated for qualifying children with developmental disabilities that have been identified by the Office for Citizens with Developmental Disabilities (OCDD) regional offices and human services authorities and districts as needing more family support services than what is currently available through state funded family support services.

1. To qualify for these waiver opportunities, children must:

a. be under 18 years of age;

b. be designated by the OCDD regional office, human services authority or district as meeting priority level 1 or 2 criteria;

c. be Medicaid eligible;

d. be eligible for state developmental disability services; and

e. meet the ICF/DD level of care.

2. Each OCDD regional office and human services authority or district shall be responsible for the prioritization of these opportunities. Priority levels shall be defined according to the following criteria:

a. Priority Level 1. Without the requested supports, there is an immediate or potential threat of out-of-home placement or homelessness due to:

i. the individual's medical care needs;

ii. documented abuse or neglect of the individual;

iii. the individual's intense or frequent challenging behavioral needs; or

iv. death or inability of the caregiver to continue care due to their own age or health; or

v. the possibility that the individual may experience a health crisis leading to death, hospitalization or placement in a nursing facility.

b. Priority Level 2. Supports are needed to prevent the individual's health from deteriorating or the individual from losing any of their independence or productivity.

3. Children who qualify for one of these waiver opportunities are not required to have a protected request date on the Developmental Disabilities Request for Services Registry.

4. Each OCDD regional office, human services authority and district shall have a specific number of these opportunities designated to them for allocation to waiver recipients.

6. In the event one of these opportunities is vacated, the opportunity shall be returned to the allocated pool for that particular OCDD regional office, human services authority or district for another opportunity to be offered.

7. Once all of these opportunities are filled, supports and services, based on the priority determination system, will be identified and addressed through other resources currently available for individuals with developmental disabilities.

AUTHORITY NOTE: Promulgated in accordance with R.S. 36:254 and Title XIX of the Social Security Act.

HISTORICAL NOTE: Promulgated by the Department of Health and Hospitals, Bureau of Health Services Financing and the Office for Citizens with Developmental Disabilities, LR 35:1892 (September 2009), amended LR 38:

Implementation of the provisions of this Rule may be contingent upon the approval of the U.S. Department of Health and Human Services, Centers for Medicare and Medicaid Services (CMS), if it is determined that submission to CMS for review and approval is required.

Interested persons may submit written comments to J. Ruth Kennedy, Bureau of Health Services Financing, P.O. Box 91030, Baton Rouge, LA 70821-9030. She is responsible for responding to inquiries regarding this Emergency Rule. A copy of this Emergency Rule is available for review by interested parties at parish Medicaid offices.

Bruce D. Greenstein
Secretary

1208#105

DECLARATION OF EMERGENCY

Department of Health and Hospitals
Bureau of Health Services Financing

Home and Community-Based Services Waivers
New Opportunities Waiver
Reimbursement Rate Reduction
(LAC 50:XXI.14301)

The Department of Health and Hospitals, Bureau of Health Services Financing and the Office for Citizens with Developmental Disabilities amend LAC 50:XXI.14301 in the Medical Assistance Program as authorized by R.S. 36:254 and pursuant to Title XIX of the Social Security Act and as directed by House Bill 1 of the 2012 Regular Session of the Louisiana Legislature which states: "The secretary is directed to utilize various cost containment measures to ensure expenditures remain at the level appropriated in this Schedule, including but not limited to precertification, preadmission screening, diversion, fraud control, utilization review and management, prior authorization, service limitations, drug therapy management, disease management, cost sharing, and other measures as permitted under federal law." This Emergency Rule is promulgated in accordance with the provisions of the Administrative Procedure Act, R.S. 49:953(B)(1) et seq., and shall be in effect for the maximum period allowed under the Act or until adoption of the final Rule, whichever occurs first.

As a result of a budgetary shortfall in state fiscal year 2011, the Department of Health and Hospitals, Bureau of Health Services Financing and the Office for Citizens with Developmental Disabilities amended the provisions governing the reimbursement methodology for the New Opportunities Waiver to reduce the reimbursement rates (*Louisiana Register,* Volume 37, Number 7).

Due to a budgetary shortfall in state fiscal year 2013, the department promulgated an Emergency Rule which amended the provisions governing the reimbursement methodology for the New Opportunities Waiver to reduce the reimbursement rates (*Louisiana Register*, Volume 38, Number 7). The department now proposes to amend the provisions of the July 1, 2012 Emergency Rule in order to clarify the rate reduction to NOW services. This action is being taken to avoid a budget deficit in the medical assistance programs.

Effective July 1, 2012, the Department of Health and Hospitals, Bureau of Health Services Financing and the Office for Citizens with Developmental Disabilities amend the provisions of the July 1, 2012 Emergency Rule governing the reimbursement methodology for the New Opportunities Waiver.

Title 50
PUBLIC HEALTH-MEDICAL ASSISTANCE
Part XXI. Home and Community Based Services Waivers
Subpart 11. New Opportunities Waiver
Chapter 143. Reimbursement
§14301. Reimbursement Methodology

A. - J.1.e. …

K. Effective for dates of service on or after July 1, 2012, the reimbursement rates for individualized and family support services–day provided to one person shall be reduced by 1.5 percent of the rates in effect on June 30, 2012.

1. - 1.f. Repealed.

AUTHORITY NOTE: Promulgated in accordance with R.S. 36:254 and Title XIX of the Social Security Act.

HISTORICAL NOTE: Promulgated by the Department of Health and Hospitals, Office of the Secretary, Bureau of Community Supports and Services, LR 30:1209 (June 2004), amended by the Department of Health and Hospitals, Office for Citizens with Developmental Disabilities, LR 34:252 (February 2008), amended by the Department of Health and Hospitals, Bureau of Health Services Financing and the Office for Citizens with Developmental Disabilities, LR 35:1851 (September 2009), amended LR 36:1247 (June 2010), LR 37:2158 (July 2011), LR 38:

Implementation of the provisions of this Rule may be contingent upon the approval of the U.S. Department of Health and Human Services, Centers for Medicare and Medicaid Services (CMS), if it is determined that submission to CMS for review and approval is required.

Interested persons may submit written comments to J. Ruth Kennedy, Bureau of Health Services Financing, P.O. Box 91030, Baton Rouge, LA 70821-9030. She is responsible for responding to inquiries regarding this

Emergency Rule. A copy of this Emergency Rule is available for review by interested parties at parish Medicaid offices.

Bruce D. Greenstein
Secretary

1208#095

DECLARATION OF EMERGENCY

Department of Health and Hospitals
Bureau of Health Services Financing
and
Office for Citizens with Developmental Disabilities

Home and Community-Based Services Waivers
Residential Options Waiver
(LAC 50:XXI.Chapters 161-169)

The Department of Health and Hospitals, Bureau of Health Services Financing and the Office for Citizens with Developmental Disabilities amend LAC 50:XXI.Chapters 161-169 under the Medical Assistance Program as authorized by R.S. 36:254 and pursuant to Title XIX of the Social Security Act. This Emergency Rule is promulgated in accordance with the provisions of the Administrative Procedure Act, R.S. 49:953(B) (1) et seq., and shall be in effect for the maximum period allowed under the Act or until adoption of the final Rule, whichever occurs first.

The Department of Health and Hospitals, Office for Citizens with Developmental Disabilities adopted provisions establishing the Residential Options Waiver (ROW), a home and community-based services (HCBS) waiver program, to promote independence for individuals with developmental disabilities by offering a wide array of services, supports and residential options that assist individuals to transition from institutional care (*Louisiana Register*, Volume 33, Number 11). The department promulgated an Emergency Rule which amended the November 20, 2007 Rule to revise the provisions governing the allocation of waiver opportunities and the delivery of services in order to provide greater clarity (*Louisiana Register*, Volume 36, Number 4). As a result of a budgetary shortfall in state fiscal year 2011, the department promulgated an Emergency Rule which amended the provisions governing the Residential Options Waiver to clarify the provisions governing the annual service budget for waiver participants and to reduce the reimbursement rates for waiver services (*Louisiana Register*, Volume 36, Number 8). The department promulgated an Emergency Rule which amended the provisions of the May 1, 2010 Emergency Rule to incorporate the provisions of the August 1, 2010 Emergency Rule (*Louisiana Register*, Volume 36, Number 8). The department promulgated an Emergency Rule which amended the provisions of the August 20, 2010 Emergency Rule governing the allocation of waiver opportunities in order to adopt criteria for crisis diversion, to revise the provisions governing the individuals who may be offered a waiver opportunity, and to clarify the provisions governing the Developmental Disabilities Request for Services Registry (*Louisiana Register*, Volume 37, Number 6). This Emergency Rule is being promulgated to continue the provisions of the May 20, 2011 Emergency Rule. This action is being taken to comply with the provisions of the approved waiver application and to secure enhanced federal funding.

Effective September 15, 2012, the Department of Health and Hospitals, Bureau of Health Services Financing and the Office for Citizens with Developmental Disabilities amend the provisions governing the Residential Options Waiver.

Title 50
PUBLIC HEALTH—MEDICAL ASSISTANCE
Part XXI. Home and Community Based Services Waivers
Subpart 13. Residential Options Waiver
Chapter 161. General Provisions

§16101. Introduction

A. The Residential Options Waiver (ROW), a 1915(c) home and community-based services (HCBS) waiver, is designed to enhance the long-term services and supports available to individuals with developmental disabilities. These individuals would otherwise require an intermediate care facility for persons with developmental disabilities (ICF/DD) level of care.

B. ...

AUTHORITY NOTE: Promulgated in accordance with R.S. 36:254 and Title XIX of the Social Security Act.

HISTORICAL NOTE: Promulgated by the Department of Health and Hospitals, Office for Citizens with Developmental Disabilities, LR 33:2441 (November 2007), amended by the Department of Health and Hospitals, Bureau of Health Services Financing and the Office for Citizens with Developmental Disabilities, LR 38:

§16103. Program Description

A. The ROW is designed to utilize the principles of self determination and to supplement the family and/or community supports that are available to maintain the individual in the community. In keeping with the principles of self-determination, ROW includes a self-direction option which allows for greater flexibility in hiring, training and general service delivery issues. ROW services are meant to enhance, not replace existing informal networks.

B. ROW offers an alternative to institutional care that:

1. utilizes a wide array of services, supports and residential options which best meet the individual's needs and preferences;

2. meets the highest standards of quality and national best practices in the provision of services; and

3. ensures health and safety through a comprehensive system of participant safeguards.

4. Repealed.

C. All ROW services are accessed through the support coordination agency of the participant's choice.

1. The plan of care (POC) shall be developed using a person-centered process coordinated by the participant's support coordinator.

D. All services must be prior authorized and delivered in accordance with the approved POC.

E. The total expenditures available for each waiver participant is established through an assessment of individual support needs and will not exceed the approved ICF/DD ICAP rate established for that individual.

1. When the department determines that it is necessary to adjust the ICF/DD ICAP rate, each waiver participant's annual service budget shall be adjusted to ensure that the participant's total available expenditures do not exceed the approved ICAP rate.

F. No reimbursement for ROW services shall be made for a participant who is admitted to an inpatient setting.

G. Repealed.

AUTHORITY NOTE: Promulgated in accordance with R.S. 36:254 and Title XIX of the Social Security Act.

HISTORICAL NOTE: Promulgated by the Department of Health and Hospitals, Office for Citizens with Developmental Disabilities, LR 33:2441 (November 2007), amended by the Department of Health and Hospitals, Bureau of Health Services Financing and the Office for Citizens with Developmental Disabilities, LR 38:

§16105. Participant Qualifications

A. In order to qualify for services through the ROW, an individual must be offered a ROW opportunity and meet all of the following criteria:

1. have a developmental disability as specified in the Louisiana Developmental Disability Law and determined through the developmental disabilities system entry process;

2. meet the requirements for an ICF/DD level of care which requires active treatment for developmental disabilities under the supervision of a qualified developmental disabilities professional;

3. meet the financial eligibility requirements for the Louisiana Medicaid Program;

4. be a resident of Louisiana; and

5. be a citizen of the United States or a qualified alien.

B. Assurances are required that the health, safety and welfare of the individual can be maintained in the community with the provision of ROW services.

1 - 3.c. Repealed.

C. Justification must be documented in the OCDD approved POC that the ROW services are appropriate, cost effective and represent the least restrictive environment for the individual.

AUTHORITY NOTE: Promulgated in accordance with R.S. 36:254 and Title XIX of the Social Security Act.

HISTORICAL NOTE: Promulgated by the Department of Health and Hospitals, Office for Citizens with Developmental Disabilities, LR 33:2441 (November 2007) , amended by the Department of Health and Hospitals, Bureau of Health Services Financing and Office for Citizens with Developmental Disabilities, LR 38:

§16106. Money Follows the Person Rebalancing Demonstration

A. The Money Follows the Person (MFP) Rebalancing Demonstration is a federal demonstration grant awarded by the Centers for Medicare and Medicaid Services to the Department of Health and Hospitals. The MFP demonstration is a transition program that targets individuals using qualified institutional services and moves them to home and community-based long-term care services.

1. For the purposes of these provisions, a qualified institution is a nursing facility, hospital, or Medicaid enrolled intermediate care facility for people with developmental disabilities (ICF/DD).

B. Participants must meet the following criteria for participation in the MFP rebalancing demonstration.

1. Participants with a developmental disability must:

a. occupy a licensed, approved Medicaid enrolled nursing facility, hospital or ICF/DD bed for at least three consecutive months; and

b. be Medicaid eligible, eligible for state developmental disability services, and meet an ICF/DD level of care.

2. The participant or his/her responsible representative must provide informed consent for both transition and participation in the demonstration.

C. Participants in the demonstration are not required to have a protected date on the developmental disabilities request for services registry.

D. All other ROW provisions apply to the money follows the person rebalancing demonstration.

E. MFP participants cannot participate in ROW shared living services which serve more than four persons in a single residence.

AUTHORITY NOTE: Promulgated in accordance with R.S. 36:254 and Title XIX of the Social Security Act.

HISTORICAL NOTE: Promulgated by the Department of Health and Hospitals, Bureau of Health Services Financing and Office for Citizens with Developmental Disabilities, LR 38:

§16107. Programmatic Allocation of Waiver Opportunities

A. The Developmental Disabilities Request for Services Registry (RFSR), hereafter referred to as "the registry," shall be used to evaluate individuals for ROW opportunities and to fill waiver opportunities for persons with developmental disabilities, except for those specific opportunities to be provided to persons who are described in Paragraph B.1-5 of this Section, who are not on the registry.

1. The next individual on the registry shall be notified in writing that a waiver opportunity is available and that he/she is next in line to be evaluated for a possible waiver assignment. The individual shall then choose a support coordination agency that will assist in the gathering of the documents needed for both the financial eligibility and medical certification process for the level of care determination.

a. - e. Repealed.

2. If the individual is determined to be ineligible, either financially or medically, that individual shall be notified in writing. The next individual on the registry shall be notified, as stated in Paragraph B.1 of this Section, and the process continues until an eligible individual is assigned the waiver opportunity.

3. A waiver opportunity shall be assigned to an individual when eligibility is established and the individual is certified. By accepting a ROW opportunity, this person's name will be removed from the registry.

B. ROW opportunities will be offered to the following individuals:

1. persons who meet the ICF/DD level of care and are being serviced through the OCDD host home contracts;

2. persons who meet the ICF/DD level of care and who need HCBS due to a health and/or safety crisis situation (crisis diversion):

a. requests for crisis diversion shall be made through OCDD. To be considered for a crisis diversion opportunity, the individual must need long-term supports, not temporary or short-term supports;

b. determination of priority for a crisis diversion ROW opportunity will be considered by OCDD for the individual who is eligible for services and meets one of the following criteria:

i. homeless;

ii. at imminent risk of losing current residential placement;

iii. referred by the judicial system;

iv. referred by child, adult, or elderly protective authorities;

v. without a caregiver and cannot adequately care for self;

vi. with a caregiver who can no longer provide care; or

vii. whose needs cannot be met within a community living situation;

3. children who:

a. are from birth to age 18;

b. reside in a nursing facility;

c. meet the high-need requirements for a nursing facility level of care, as well as the ROW level of care requirements;

d. participate in the MFP rebalancing demonstration; and

e. have parents or legal guardians who wish to transition them to a home and community-based residential services waiver;

4. persons who reside in a Medicaid-enrolled ICF/DD and wish to transition to a home and community-based residential services waiver through a voluntary ICF/DD bed conversion process;

5. persons who wish to transition from a supports and services center into a ROW opportunity;

6. adults in nursing facilities (NFs) who wish to transition to home and community-based residential services and who meet the level of care (LOC) that qualifies them for ROW eligibility based on their RFSR protected date on a first come, first served basis; and

7. persons residing in ICFs/DD who wish to transition to a home and community-based residential services setting and are eligible based on their RFSR protected date on a first come, first served basis.

C. The Office for Citizens with Developmental Disabilities has the responsibility to monitor the utilization of ROW opportunities. At the discretion of OCDD, specifically allocated waiver opportunities may be reallocated to better meet the needs of citizens with developmental disabilities in the State of Louisiana.

C.1. - E. Repealed.

AUTHORITY NOTE: Promulgated in accordance with R.S. 36:254 and Title XIX of the Social Security Act.

HISTORICAL NOTE: Promulgated by the Department of Health and Hospitals, Office for Citizens with Developmental Disabilities, LR 33:2441 (November 2007) , amended by the Department of Health and Hospitals, Bureau of Health Services Financing and the Office for Citizens with Developmental Disabilities, LR 38:

§16109. Admission Denial or Discharge Criteria

A. Admission to the ROW Program shall be denied if one of the following criteria is met.

1. The individual does not meet the financial eligibility requirements for the Medicaid Program.

2. The individual does not meet the requirements for an ICF/DD level of care.

3. The individual does not meet developmental disability system eligibility.

4. The individual is incarcerated or under the jurisdiction of penal authorities, courts or state juvenile authorities.

5. The individual resides in another state.

6. The health and welfare of the individual cannot be assured through the provision of ROW services.

7. The individual fails to cooperate in the eligibility determination process or in the development of the POC.

8. Repealed.

B. Participants shall be discharged from the ROW Program if any of the following conditions are determined:

1. loss of Medicaid financial eligibility as determined by the Medicaid Program;

2. loss of eligibility for an ICF/DD level of care;

3. loss of developmental disability system eligibility;

4. incarceration or placement under the jurisdiction of penal authorities, courts or state juvenile authorities;

5. change of residence to another state ;

6. admission to an ICF/DD or nursing facility with the intent to stay and not to return to waiver services;

7. the health and welfare of the participant cannot be assured through the provision of ROW services in accordance with the participant's approved POC;

8. the participant fails to cooperate in the eligibility renewal process or the implementation of the approved POC, or the responsibilities of the ROW participant; or

9. continuity of stay for consideration of Medicaid eligibility under the special income criteria is interrupted as a result of the participant not receiving ROW services during a period of 30 consecutive days;

a. continuity of stay is not considered to be interrupted if the participant is admitted to a hospital, nursing facility or ICF/DD.

i. the participant shall be discharged from the ROW if the treating physician documents that the institutional stay will exceed 90 days.

10. continuity of services is interrupted as a result of the participant not receiving ROW services during a period of 30 consecutive days.

AUTHORITY NOTE: Promulgated in accordance with R.S. 36:254 and Title XIX of the Social Security Act.

HISTORICAL NOTE: Promulgated by the Department of Health and Hospitals, Office for Citizens with Developmental Disabilities, LR 33:2443 (November 2007) , amended by the Department of Health and Hospitals, Bureau of Health Services Financing and the Office for Citizens with Developmental Disabilities, LR 38:

Chapter 163. Covered Services

§16301. Assistive Technology and Specialized Medical Equipment and Supplies

A. Assistive technology and specialized medical equipment and supplies (AT/SMES) are equipment, devices, controls, appliances, supplies and services which enable the participant to:

1. have life support;

2. address physical conditions;

3. increase ability to perform activities of daily living;

4. increase, maintain or improve ability to function more independently in the home and/or community; and

5. increase ability to perceive, control or communicate.

B. AT/SMES services provided through the ROW include the following services:

1. evaluation of participant needs;

2. customization of the equipment or device;

3. coordination of necessary therapies, interventions or services;

4. training or technical assistance on the use and maintenance of the equipment or device for the participant or, where appropriate, his/her family members, legal guardian or responsible representative;

5. training or technical assistance, when appropriate, for professionals, other service providers, employers, or other individuals who are substantially involved in the participant's major life functions;

6. all service contracts and warranties included in the purchase of the item by the manufacturer; and

7. equipment or device repair and replacement of batteries and other items that contribute to ongoing maintenance of the equipment or device.

a. Separate payment will be made for repairs after expiration of the warranty only when it is determined to be cost effective.

C. Approval of AT/SMES services through ROW is contingent upon the denial of a prior authorization request for the item as a Medicaid State Plan service and demonstration of the direct medical, habilitative or remedial benefit of the item to the participant.

1. Items reimbursed in the ROW may be in addition to any medical equipment and supplies furnished under the Medicaid State Plan.

1.a. - 7. Repealed.

D. ...

E. Service Exclusions

1. Assistive technology devices and specialized equipment and supplies that are of general utility or maintenance and have no direct medical or remedial benefit to the participant are excluded from coverage.

2. Any equipment, device, appliance or supply that is covered and has been approved under the Medicaid State Plan, Medicare or any other third party insurance is excluded from coverage.

3. For adults over the age of 20 years, specialized chairs, whether mobile or travel, are not covered.

F. Provider Participation Requirements. Providers of AT/SMES services must meet the following participation requirements. The provider must:

1. be enrolled in the Medicaid Program as a assistive devices or durable medical equipment provider and must meet all applicable vendor standards and requirement for manufacturing, design and installation of technological equipment and supplies;

2. furnish written documentation of authorization to sell, install and/or repair technological equipment and supplies from the respective manufacturer of the designated equipment and supplies; and

3. provide documentation of individual employees' training and experience with the application, use, fitting and repair of the equipment or devices which they propose to sell or repair;

a. upon completion of the work and prior to payment, the provider shall give the participant a certificate of warranty for all labor and installation and all warranty certificates.

AUTHORITY NOTE: Promulgated in accordance with R.S. 36:254 and Title XIX of the Social Security Act.

HISTORICAL NOTE: Promulgated by the Department of Health and Hospitals, Office for Citizens with Developmental Disabilities, LR 33:2443 (November 2007) , amended by the Department of Health and Hospitals, Bureau of Health Services Financing and the Office for Citizens with Developmental Disabilities, LR 38:

§16303. Community Living Supports

A. Community living supports (CLS) are services provided to assist participants to achieve and maintain the outcomes of increased independence, productivity and inclusion in the community by utilizing teaching and support strategies. CLS may be furnished through self-direction or through a licensed, enrolled agency.

B. Community living supports are related to acquiring, retaining and improving independence, autonomy and adaptive skills. CLS may include the following services:

1. direct support services or self-help skills training for the performance of all the activities of daily living and self-care;

2. socialization skills training;

a. Repealed.

3. cognitive, communication tasks, and adaptive skills training; and

a. Repealed.

4. development of appropriate, positive behaviors.

a. - b. Repealed.

C. ...

D. Community Living Supports may be shared by up to three recipients who may or may not live together, and who have a common direct service provider. In order for CLS services to be shared, the following conditions must be met:

1. an agreement must be reached among all involved participants or their legal guardians regarding the provisions of shared CLS services;

2. the health and welfare of each participant must be assured though the provision of shared services;

3. services must be reflected in each participant's approved plan of care and based on an individual-by-individual determination; and

4. a shared rate must be billed.

E. - E.1. ...

2. Routine care and supervision that is normally provided by the participant's spouse or family, and services provided to a minor by the child's parent or step-parent, are not covered.

3. CLS services may not be furnished in a home that is not leased or owned by the participant or the participant's family.

4. Participants may not live in the same house as CLS staff.

5. Room and board or maintenance, upkeep and improvement of the individual's or family's residence is not covered.

6. Community living supports shall not be provided in a licensed respite care facility.

a. - d. Repealed.

7. Community living supports services are not available to individuals receiving the following services:

a. shared living;

b. home host; or

c. companion care.

8. Community living supports cannot be billed or provided for during the same hours on the same day that the participant is receiving the following services:

a. day habilitation;

b. prevocational;

c. supported employment;
d. respite-out of home services; or
e. transportation-community access.

F. - F.1. ...

AUTHORITY NOTE: Promulgated in accordance with R.S. 36:254 and Title XIX of the Social Security Act.

HISTORICAL NOTE: Promulgated by the Department of Health and Hospitals, Office for Citizens with Developmental Disabilities, LR 33:2443 (November 2007) , amended by the Department of Health and Hospitals, Bureau of Health Services Financing and the Office for Citizens with Developmental Disabilities, LR 38:

§16305. Companion Care

A. Companion care services assist the recipient to achieve and/or maintain the outcomes of increased independence, productivity and inclusion in the community. These services are designed for individuals who live independently and can manage their own household with limited supports. The companion provides services in the participant's home and lives with the participant as a roommate. Companion care services may be furnished through self-direction or through a licensed provider agency as outlined in the participant's POC. This service includes:

1. providing assistance with all of the activities of daily living as indicated in the participant's POC; and

2. community integration and coordination of transportation services, including medical appointments.

3. Repealed.

B. Companion care services can be arranged by licensed providers who hire companions, or services can be self-directed by the participant. The companion is a principal care provider who is at least 18 years of age who lives with the participant as a roommate and provides services in the participant's home.

1. - 2. Repealed.

C. Provider Responsibilities

1. The provider organization shall develop a written agreement as part of the participant's POC which defines all of the shared responsibilities between the companion and the participant. The written agreement shall include, but is not limited to:

a. - c. …

2. Revisions to this agreement must be facilitated by the provider and approved by the support team. Revisions may occur at the request of the participant, the companion, the provider or other support team members.

3. The provider is responsible for performing the following functions which are included in the daily rate:

a. arranging the delivery of services and providing emergency services as needed;

b. making an initial home inspection to the participant's home, as well as periodic home visits as required by the department;

c. contacting the companion a minimum of once per week or as specified in the participant's POC; and

d. providing 24-hour oversight and supervision of the companion care services, including back-up for the scheduled and unscheduled absences of the companion.

4. The provider shall facilitate a signed written agreement between the companion and the participant.

a. - b. Repealed.

D. Companion Responsibilities

1. The companion is responsible for:

a. participating in and abiding by the POC;

b. …

c. purchasing his/her own food and personal care items.

E. Service Limits

1. The provider agency must provide relief staff for scheduled and unscheduled absences, available for up to 360 hours (15 days) as authorized by the POC. Relief staff for scheduled and unscheduled absences is included in the provider agency's rate.

F. Service Exclusions

1. Companion care is not available to individuals receiving the following services:

a. respite care service–out of home;

b. shared living;

c. community living supports; or

d. host home.

2. - 2.d. Repealed.

G. ...

AUTHORITY NOTE: Promulgated in accordance with R.S. 36:254 and Title XIX of the Social Security Act.

HISTORICAL NOTE: Promulgated by the Department of Health and Hospitals, Office for Citizens with Developmental Disabilities, LR 33:2444 (November 2007) , amended by the Department of Health and Hospitals, Bureau of Health Services Financing and the Office for Citizens with Developmental Disabilities, LR 38:

§16307. Day Habilitation Services

A. Day habilitation services are aimed at developing activities and/or skills acquisition to support or further community integration opportunities outside of an individual's home. These activities shall promote independence, autonomy and assist the participant with developing a full life in his community. The primary focus of day habilitation services is acquisition of new skills or maintenance of existing skills based on individualized preferences and goals.

1. The skill acquisition and maintenance activities should include formal strategies for teaching the individualized skills and include the intended outcome for the participant.

2. …

3. As an individual develops new skills, training should progress along a continuum of habilitation services offered toward greater independence and self-reliance.

B. Day habilitation services shall:

1. focus on enabling participants to attain maximum skills;

2. be coordinated with any physical, occupational or speech therapies included in the participant's POC;

3. - 4. …

a. services are based on a one-half day unit of service and on time spent at the service site by the participant;

b. the one-half day unit of service requires a minimum of 2.5 hours;

c. two one-half day units may be billed if the participant spends a minimum of 5 hours at the service site;

d. any time less than 2.5 hours of services is not billable or payable; and

e. no rounding up of hours is allowed.

C. The provider is responsible for all transportation from the agency to all work sites related to the provision of service.

1. Transportation to and from the service site is offered and billable as a component of the Day Habilitation service; however, transportation is payable only when a Day Habilitation service is provided on the same day.

2. - 4.c. Repealed.

D. Participants may receive more than one type of vocational/habilitative service per day as long as the service and billing criteria are followed and as long as requirements for the minimum time spent on site are adhered to.

E. Service Exclusions

1. Time spent traveling to and from the day habilitation program site shall not be included in the calculation of the total number of day habilitation service hours provided per day.

a. Travel training for the purpose of teaching the participant to use transportation services may be included in determining the total number of service hours provided per day, but only for the period of time specified in the POC.

2. Transportation-community access will not be used to transport ROW participants to any day habilitation services.

3. Day habilitation services cannot be billed or provided during the same hours on the same day as any of the following services:

a. Community Living Supports;

b. Professional services, except those direct contacts needed to develop a behavioral management plan or any other type of specialized assessment/plan; or

c. respite care services–out of home.

F. Provider Qualifications. Providers must be licensed as an adult day care agency.

AUTHORITY NOTE: Promulgated in accordance with R.S. 36:254 and Title XIX of the Social Security Act.

HISTORICAL NOTE: Promulgated by the Department of Health and Hospitals, Office for Citizens with Developmental Disabilities, LR 33:2445 (November 2007), amended by the Department of Health and Hospitals, Bureau of Health Services Financing and the Office for Citizens with Developmental Disabilities, LR 38:

§16309. Dental Services

A. Dental services are available to adult participants over the age of 21 as a component of the ROW. Covered dental services include:

1. diagnostic services;
2. preventative services;
3. restorative services;
4. endodontic services;
5. periodontal services;
6. removable prosthodontics services;
7. maxillofacial prosthetics services;
8. fixed prosthodontics services;
9. oral and maxillofacial surgery
10. orthodontic services; and
11. adjunctive general services.

B. Service Exclusion. Participants must first access dental services covered under the Medicaid State Plan before utilizing dental services through the residential options waiver.

C. Provider Qualifications. Providers must have a current, valid license to provide dental services from the Louisiana State Board of Examiners for Dentistry for the specific dental services in all specialty areas provided to the participant.

AUTHORITY NOTE: Promulgated in accordance with R.S. 36:254 and Title XIX of the Social Security Act.

HISTORICAL NOTE: Promulgated by the Department of Health and Hospitals, Office for Citizens with Developmental Disabilities, LR 33:2445 (November 2007), amended by the Department of Health and Hospitals, Bureau of Health Services Financing and the Office for Citizens with Developmental Disabilities, LR 38:

§16311. Environmental Accessibility Adaptations

A. Environmental Accessibility Adaptations are physical adaptations to the participant's home or vehicle which must be specified in the POC as necessary to enable the participant to integrate more fully into the community and to ensure his/her health, welfare and safety.

1. Reimbursement shall not be paid until receipt of written documentation that the job has been completed to the satisfaction of the participant.

B. Environmental adaptation services to the home and vehicle include the following:

1. assessments to determine the types of modifications that are needed;

2. training the participant and appropriate direct care staff in the use and maintenance of devices, controls, appliances and related items;

3. repair of all equipment and/or devices, including replacement of batteries and other items that contribute to the ongoing maintenance of the adaptation(s); and

4. all service contracts and warranties which the manufacturer includes in the purchase of the item.

C. In order to accommodate the medical equipment and supplies necessary to assure the welfare of the participant, home accessibility adaptations may include the following:

1. installation of ramps and grab-bars;
2. widening of doorways;
3. modification of bathroom facilities; or
4. installation of specialized electric and plumbing systems.

D. Home accessibility adaptations may be applied to rental or leased property only under the following conditions:

1. the participant is renting or leasing the property; and

2. written approval is obtained from the landlord and OCDD.

E. - F.4.g. ...

5. Home modifications shall not be paid for in the following residential services:

a. Host Home; or

b. Shared Living settings which are provider owned or leased.

G. Vehicle adaptations are modifications to an automobile or van that is the waiver participant's primary means of transportation in order to accommodate his/her special needs. .

1. The modifications may include the installation of a lift or other adaptations to make the vehicle accessible to the participant or for him/her to drive.

2. Repealed.

H. Service Exclusions for Vehicle Adaptations

1. Payment will not be made to:

a. adapt vehicles that are owned or leased by paid caregivers or providers of waiver services, or

b. to purchase or lease a vehicle.

2. - 4. ...

I. Provider Responsibilities

1. The environmental accessibility adaptation(s) must be delivered, installed, operational and reimbursed in the POC year in which it was approved.

a. - b. Repealed.

2. A written itemized detailed bid, including drawings with the dimensions of the existing and proposed floor plans relating to the modifications, must be obtained and submitted for prior authorization.

a. Repealed.

3. Vehicle modifications must meet all applicable standards of manufacture, design and installation for all adaptations to the vehicle.

4. Upon completion of the work and prior to payment, the provider shall give the participant a certificate of warranty for all labor and installation and all warranty certificates from manufacturers.

J. Provider Qualifications. In order to participate in the Medicaid Program, providers must meet the following qualifications.

1. Providers of environmental accessibility adaptations for the home must be registered through the Louisiana State Licensing Board for Contractors as a home improvement contractor.

a. In addition, these providers must:

i. meet the applicable state and/or local requirements governing their licensure or certification; and

ii. comply with the applicable state and local building or housing code standards governing home modifications.

b. The individuals performing the actual service (building contractors, plumbers, electricians, carpenters, etc.) must also comply with the applicable state and/or local requirements governing individual licensure or certification.

2. Providers of environmental accessibility adaptations to vehicles must be licensed by the Louisiana Motor Vehicle Commission as a specialty vehicle dealer and accredited by the National Mobility Equipment Dealers Association under the structural vehicle modifier category.

AUTHORITY NOTE: Promulgated in accordance with R.S. 36:254 and Title XIX of the Social Security Act.

HISTORICAL NOTE: Promulgated by the Department of Health and Hospitals, Office for Citizens with Developmental Disabilities, LR 33:2446 (November 2007) , amended by the Department of Health and Hospitals, Bureau of Health Services Financing and the Office for Citizens with Developmental Disabilities, LR 38:

§16313. Host Home

A. Host Home services assist participants in meeting their basic adaptive living needs and offer direct support where required. Participants are afforded a welcoming, safe and nurturing family atmosphere in a family home environment in which the participant may receive supports, services and training in accordance with the POC. Host Home services take into account compatibility, including individual interests, age, needs for privacy, supervision and support needs. These services are provided in a private home by a contractor of the host home agency who lives in the home, and either rents or owns the residence. The contractor utilizes specific teaching strategies to encourage independence and autonomy when required as a part of the participant's POC.

1. Repealed.

B. Host home services include:

1. assistance with the activities of daily living sand adaptive living needs;

2. assistance to develop leisure interests and daily activities in the home setting;

3. assistance to develop relationships with other members of the household;

4. supports in accessing community services, activities and pursuing and developing recreational and social interests outside the home; and

5. teaching community living skills to achieve participant's goals concerning community and social life as well as to maintain contacts with biological families and natural supports.

C. Host home provider agencies oversee and monitor the host home contractor to ensure the availability, quality, and continuity of services as specified in the ROW manual. Host home provider agencies are responsible for the following functions:

1. arranging for a host home;

2. making an initial and periodic inspections of the host home; and

3. providing 24-hour oversight and supervision of host home services including providing emergency services and back-up for the scheduled and nonscheduled absences of the contractor;

a. Repealed.

D. Host home contractors are responsible for:

1. assisting with the development of the participant's POC and complying with the provisions of the plan;

2. maintaining and providing data to assist in the evaluation of the participant's personal goals

3. maintaining adequate records to substantiate service delivery and producing such records upon request;

4. undergoing any specialized training deemed necessary by the provider agency, or required by the department, to provide supports in the Host Home setting; and

5. immediately reporting to the department and applicable authorities any major issues or concerns related to the participant's safety and well-being.

6. - 10. Repealed.

E. ...

F. Host home contractors serving adults are required to be available for daily supervision, support needs or emergencies as outlined in the adult participant's POC based on medical, health and behavioral needs, age, capabilities and any special needs.

1. - I.1. ...

2. Separate payment will not be made for the following residential service models if the participant is receiving Host Home services:

1.a. - 3. …

J. Provider Qualifications

1. All agencies must:

a. have experience in delivering therapeutic services to persons with developmental disabilities;

b. have staff who have experience working with persons with developmental disabilities;

c. screen, train, oversee and provide technical assistance to the Host Home contractors in accordance with OCDD requirements, including the coordination of an array of medical, behavioral and other professional services appropriate for persons with developmental disabilities; and

d. provide on-going assistance to the Host Home contractors so that all HCBS requirements are met.

2. Agencies serving children must be licensed by the Department of Social Services as a Class "A" Child Placing Agency.

3. Agencies serving adults must be licensed by the Department of Health and Hospitals as a provider of Substitute Family Care services.

AUTHORITY NOTE: Promulgated in accordance with R.S. 36:254 and Title XIX of the Social Security Act.

HISTORICAL NOTE: Promulgated by the Department of Health and Hospitals, Office for Citizens with Developmental Disabilities, LR 33:2447 (November 2007) , amended by the Department of Health and Hospitals, Bureau of Health Services Financing and the Office for Citizens with Developmental Disabilities, LR 38:

§16315. Intensive Community Supports

Repealed.

AUTHORITY NOTE: Promulgated in accordance with R.S. 36:254 and Title XIX of the Social Security Act.

HISTORICAL NOTE: Promulgated by the Department of Health and Hospitals, Office for Citizens with Developmental Disabilities, LR 33:2448 (November 2007), repealed by the Department of Health and Hospitals, Bureau of Health Services Financing and the Office for Citizens with Developmental Disabilities, LR 38:

§16317. Nursing Services

A. Nursing services are medically necessary services ordered by a physician and provided by a licensed registered nurse or a licensed practical nurse within the scope of the State's Nurse Practice Act. Nursing services provided in the ROW are an extension of nursing services provided through the Home Health Program covered under the Medicaid State Plan.

1. The services require an individual nursing service plan and must be included in the plan of care.

2. The nurse must submit updates of any changes to the individual's needs and/or the physician's orders to the support coordinator every 60 days.

3. Repealed.

B. Nursing consulting services include assessments and health related training and education for participants and caregivers.

1. – 2. ...

3. The health related training and education service is the only nursing service which can be provided to more than one participant simultaneously. The cost of the service is allocated equally among all participants.

C. Service Requirement. Participants over the age of 21 years must first exhaust all available nursing visits provided under the Medicaid State Plan prior to receiving services through the waiver program.

D. Provider Qualifications

1. In order to participate in the Medicaid Program, the provider agency must possess a current, valid license as a home health agency or, if under the ROW shared living conversion model, be an enrolled shared living services agency with a current, valid license as a supervised independent living agency.

E. Staffing Requirements

1. ...

2. The RN or the LPN must possess one year of service delivery experience to persons with developmental disabilities defined under the following criteria:

a. full-time experience gained in advanced and accredited training programs (i.e. masters or residency level training programs), which includes treatment services for persons with developmental disabilities;

b. paid, full-time nursing experience in specialized service/treatment settings for persons with developmental disabilities (i.e. intermediate care facilities for persons with developmental disabilities;

c. paid, full-time nursing experience in multi-disciplinary programs for persons with developmental disabilities (i.e. mental health treatment programs for persons with dual diagnosis—mental illness and developmental disabilities); or

d. paid, full-time nursing experience in specialized educational, vocational and therapeutic programs or settings for persons with developmental disabilities (i.e. school special education program).

3. Two years of part-time experience with a minimum of 20 hours per week may be substituted for one year of full-time experience.

4. The following activities do not qualify for the required experience:

a. volunteer nursing experience; or

b. experience gained by caring for a relative or friend with developmental disabilities.

AUTHORITY NOTE: Promulgated in accordance with R.S. 36:254 and Title XIX of the Social Security Act.

HISTORICAL NOTE: Promulgated by the Department of Health and Hospitals, Office for Citizens with Developmental Disabilities, LR 33:2449 (November 2007), amended by the Department of Health and Hospitals, Bureau of Health Services Financing and the Office for Citizens with Developmental Disabilities, LR 38:

§16319. One Time Transitional Services

A. One Time Transitional Services are one-time, set-up services to assist individuals in making the transition from an ICF/DD to their own home or apartment in the community of their choice.

1. - 1.d.iii. Repealed.

B. Allowable transitional expenses may include:

1. nonrefundable security deposits that do not include rental payments;

2. set up fees for utilities;

3. essential furnishings to establish basic living arrangements, including:

a. bedroom and living room furniture;

b. table and chairs;

c. window blinds; and

d. food preparation items and eating utensils;

4. set-up/deposit fee for telephone service;

5. moving expenses; and

6. health and safety assurances including:

a. pest eradication; or

b. one-time cleaning prior to occupancy.

C. Service Limits

1. One time transitional expenses are capped at $3,000 per person over a participant's lifetime.

D. Service Exclusions

1. One time transitional services may not be used to pay for:

a. housing, rent or refundable security deposits; or

b. furnishings or setting up living arrangements that are owned or leased by a waiver provider.

2. One time transitional services are not available to participants who are receiving Host Home services.

3. One time transitional services are not available to participants who are moving into a family member's home.

E. ...

AUTHORITY NOTE: Promulgated in accordance with R.S. 36:254 and Title XIX of the Social Security Act.

HISTORICAL NOTE: Promulgated by the Department of Health and Hospitals, Office for Citizens with Developmental Disabilities, LR 33:2449 (November 2007), amended by the Department of Health and Hospitals, Bureau of Health Services Financing and the Office for Citizens with Developmental Disabilities, LR 38:

§16321. Personal Emergency Response System (PERS)

A. Personal Emergency Response System (PERS) is a system connected to the participant's telephone that incorporates an electronic device which enables the participant to secure help in an emergency. The device can be worn as a portable "help" button and when activated, a response center is contacted.

B. Participant Qualifications. PERS services are available to individuals who:

1. …

2. are unable to use other communication systems due to experiencing difficulty in summoning emergency assistance; or

3. …

C. PERS services includes rental of the electronic device, initial installation, training the participant to use the equipment, and monthly maintenance fees.

D. Service Exclusions

1. Separate payment will not be made for shared living services.

E. Provider Qualifications

1. The provider must be authorized by the manufacturer to install and maintain equipment for personal emergency response systems.

2. The provider shall be in compliance with all applicable federal, state, and local regulations governing the operation of personal emergency response systems including staffing requirements for the response center.

AUTHORITY NOTE: Promulgated in accordance with R.S. 36:254 and Title XIX of the Social Security Act.

HISTORICAL NOTE: Promulgated by the Department of Health and Hospitals, Office for Citizens with Developmental Disabilities, LR 33:2249 (November 2007), amended by the Department of Health and Hospitals, Bureau of Health Services Financing and the Office for Citizens with Developmental Disabilities, LR 38:

§16323. Prevocational Services

A. Prevocational services are activities designed to assist participants in acquiring and maintaining basic work-related skills necessary to acquire and retain meaningful employment. Services should include real and simulated employment tasks to assist in determining their vocational potential. Overall goals include regular community inclusion and development of work skills and habits to improve the participant's employability. Services must be reflective of the participant's POC and focused toward habilitation rather than teaching a specific job skill.

1. - 2.b. ...

B. In the event participants are compensated while receiving prevocational services, the compensation must be in accordance with the United States Fair Labor Standards Act of 1985.

1. If participants are paid in excess of 50 percent of the minimum wage, the provider must, at a minimum:

a. - c. ...

C. The provider is responsible for all transportation from the agency to all vocational sites related to provision of services.

1. Travel training may be included in determining the number of hours of services provided per day for the period of time specified in the participant's POC.

a. Repealed.

D. Service Limits

1. Services shall be limited to no more than eight hours per day, five days per week.

2. Services are based on a one-half day unit of service and time spent at the service site by the participant.

a. the one-half day unit of service requires a minimum of 2.5 hours at the service site by the participant;

b. two one-half day units may be billed in one day if the participant spends a minimum of 5 hours at the service site;

c. any time less than 2.5 hours of service is not billable or payable; and

d. no rounding up of hours is allowed.

3. Participants may receive more than one vocational/habilitative service per day as long as the billing criteria are followed for each service and the requirements for the minimum time spent on site are adhered to.

3.a. - 5.a. Repealed.

E. Service Exclusions

1. Prevocational Services are not available to participants who are eligible to participate in programs funded under the Rehabilitation Act of 1973 or the Individuals with Disabilities Education Act.

2. Multiple vocational/habilitative services cannot be provided or billed for during the same hours on the same day as the following services:

a. community living supports;

b. professional services, except those direct contacts needed to develop a behavioral management plan or other type of specialized assessment/plan; or

c. respite care services–out of home.

3. Transportation to and from the service site is only payable when a vocational/habilitative service is provided on the same day.

4. Time spent in traveling to and from the prevocational program site shall not be included in the calculation of the total number of service hours provided per day.

a. During travel training, providers must not also bill for the transportation component as this is included in the rate for the number of service hours provided.

5. Transportation-Community Access shall not be used to transport ROW participants to any prevocational services.

F. Provider Qualifications. Providers must have a current, valid license as an adult day care center.

AUTHORITY NOTE: Promulgated in accordance with R.S. 36:254 and Title XIX of the Social Security Act.

HISTORICAL NOTE: Promulgated by the Department of Health and Hospitals, Office for Citizens with Developmental Disabilities, LR 33:2450 (November 2007), amended by the Department of Health and Hospitals, Bureau of Health Services Financing and the Office for Citizens with Developmental Disabilities, LR 38:

§16325. Professional Services

A. Professional Services are direct services to participants, based on need, that may be utilized to increase the individual's independence, participation and productivity in the home, work and community. Service intensity, frequency and duration will be determined by individual need. Professional services must be delivered with the participant present and in accordance with approved POC.

1. - 8.a. Repealed.

B. Professional services include the services provided by the following licensed professionals:

1. occupational therapist;
2. physical therapist;
3. speech therapist;
4. registered dietician;
5. social worker; and
6. psychologist.

C. Professional services may be utilized to:

1. perform assessments and/or re-assessments specific to professional disciplines to accomplish the desired outcomes for the participant and to provide recommendations, treatment, and follow-up;

a. - b. Repealed.

2. provide training or therapy to a participant and/or natural and formal supports necessary to either develop critical skills that may be self-managed by the participant or maintained according to the participant's needs;

3. intervene in and stabilize a crisis situation (behavioral or medical) that could result in the loss of home and community-based services, including the development, implementation, monitoring, and modification of behavioral support plans;

a. Repealed.

4. provide consultative services and recommendations;

5. provide necessary information to the participant, family, caregivers, and/or team to assist in planning and implementing services or treatment;

6. provide caregiver counseling for the participant's natural, adoptive, foster, or host family members in order to develop and maintain healthy, stable relationships among all caregivers, including family members, to support meeting the needs of the participant;

a. emphasis is placed on the acquisition of coping skills by building upon family strengths; and

b. services are intended to maximize the emotional and social adjustment and well-being of the individual, family, and caregiver; and

7. provide nutritional services, including dietary evaluation and consultation with individuals or their care provider.

a. Services are intended to maximize the individual's nutritional health.

NOTE: Psychologists and social workers will provide supports and services consistent with person-centered practices and Guidelines for Support Planning.

D. Service Exclusions

1. Professional services may only be furnished and reimbursed through ROW when the services are medically necessary, or have habilitative or remedial benefit to the participant.

a. Repealed.

2. Recipients who are participating in ROW and are up to the age of 21 must access these services through the Early and Periodic Screening, Diagnosis and Treatment (EPSDT) Program.

a. - d. Repealed.

E. Provider Qualifications

1. Enrollment of individual practitioners. Individual practitioners who enroll as providers of professional services must:

a. have a current, valid license from the appropriate governing board of Louisiana for that profession; and

b. possess one year of service delivery experience with persons with developmental disabilities.

c. In addition, the specific service delivered must be consistent with the scope of the license held by the professional.

2. Provider agency enrollment of professional services.

a. The following provider agencies may enroll to provide professional services:

i. a Medicare certified free-standing rehabilitation center;

ii. a licensed home health agency;

iii. a supervised independent living agency licensed by the department to provide shared living services; or

iv. a substitute family care agency licensed by the department to provide host home services.

b. Enrolled provider agencies may provide professional services by one of the following methods:

i. employing the professionals; or

ii. contracting with the professionals.

c. Provider agencies are required to verify that all professionals employed by or contracted with their agency meet the same qualifications required for individual practitioners as stated in §16325.E.1.a-c.

3. All professionals delivering professional services must meet the required one year of service delivery experience as defined by the following:

a. full-time experience gained in advanced and accredited training programs (i.e. master's or residency level training programs), which includes treatment services for persons with developmental disabilities;

b. paid, full-time experience in specialized service/treatment settings for persons with developmental disabilities (i.e. ICFs/DD);

c. paid, full-time experience multi-disciplinary programs for persons with developmental disabilities (i.e. mental health treatment programs for persons with dual diagnosis—mental illness and developmental disability); or

d. paid, full-time experience in specialized educational, vocational, and therapeutic programs or settings for persons with developmental disabilities (i.e. school special education program).

e. Two years of part-time experience with a minimum of 20 hours per week of the qualifying work experience activities may be substituted for one year of full-time experience.

4. The following activities do not qualify for the professional's required service delivery experience:

a. volunteer experience; or

b. experience gained by caring for a relative or friend with developmental disabilities.

AUTHORITY NOTE: Promulgated in accordance with R.S. 36:254 and Title XIX of the Social Security Act.

HISTORICAL NOTE: Promulgated by the Department of Health and Hospitals, Office for Citizens with Developmental Disabilities, LR 33:2450 (November 2007), amended by the Department of Health and Hospitals, Bureau of Health Services Financing and the Office for Citizens with Developmental Disabilities, LR 38:

§16327. Respite Care Services–Out of Home

A. Respite care services–out of home are supports and services provided for the relief of those unpaid caregivers who normally provide care to participants who are unable to care for themselves. These services are furnished on a short-term basis in a licensed respite care center.

1. A licensed respite care facility shall insure that community activities are available to the participant in accordance with the approved POC, including transportation to and from these activities.

a. …

2. While receiving respite care services, the participant's routine is maintained in order to attend school, school activities, or other community activities that he/she would typically participate in if not in the center-based respite facility.

B. Service Limits

1. Respite care services are limited to 720 hours per participant per POC year.

2. Requests for an extension of the service limit are subject to the department's established approval process and require proper justification and documentation.

C. Service Exclusions

1. …

2. Respite care services-out of home may not be billed for participants receiving the following services:

a. shared living;

b. companion care; or

c. host home.

d. Repealed.

D. Provider Qualifications. The provider must possess a current, valid license as a respite care center issued by the department.

AUTHORITY NOTE: Promulgated in accordance with R.S. 36:254 and Title XIX of the Social Security Act.

HISTORICAL NOTE: Promulgated by the Department of Health and Hospitals, Office for Citizens with Developmental Disabilities, LR 33:2451 (November 2007), amended by the Department of Health and Hospitals, Bureau of Health Services Financing and the Office for Citizens with Developmental Disabilities, LR 38:

§16329. Shared Living Services

A. Shared living services assist the participant in acquiring, retaining and improving the self-care, adaptive and leisure skills needed to reside successfully in a shared home setting within the community. Services are chosen by the participant and developed in accordance with his/her goals and wishes with regard to compatibility, interests, age and privacy in the shared living setting.

1. A shared living services provider delivers supports which include:

a. 24-hour staff availability;

b. assistance with activities of daily living included in the participant's POC;

c. a daily schedule;

d. health and welfare needs;

e. transportation;

f. any non-residential ROW services delivered by the Shared Living services provider; and

g. other responsibilities as required in each participant's POC.

2. - 3. Repealed.

B. An ICF/DD may elect to permanently relinquish its ICF/DD license and all of its Medicaid facility need review approved beds from the total number of certificate of need (CON) beds for that home and convert it into a shared living waiver home or in combination with other ROW residential options as deemed appropriate in the approved conversion agreement.

1. In order to convert, provider request must be approved by the department and by OCDD.

2. ICF/DD residents who choose transition to a shared living waiver home must also agree to conversion of their residence.

3. If choosing ROW services, persons may select any ROW services and provider(s) based upon freedom of choice.

C. Shared Living Options

1. Shared Living Conversion Option. The shared living conversion option is only allowed for providers of homes which were previously licensed and Medicaid certified as an ICF/DD for up to a maximum of eight licensed and Medicaid-funded beds on October 1, 2009.

a. The number of participants for the shared living conversion option shall not exceed the licensed and Medicaid-funded bed capacity of the ICF/DD on October 1, 2009, or up to six individuals, whichever is less.

b. The ICF/DD used for the shared living conversion option must meet the department's operational, programming and quality assurances of health and safety for all participants.

c. The provider of shared living services is responsible for the overall assurances of health and safety for all participants.

d. The provider of shared living conversion option may provide nursing services and professional services to participants utilizing this residential services option.

2. Shared Living Non-Conversion (New) Option. The shared living non-conversion option is allowed only for new or existing ICF/DD providers to establish a shared living waiver home for up to a maximum of three individuals.

a. The shared living waiver home must be located separate and apart from any ICF/DD.

b. The shared living waiver home must be either a home owned or leased by the waiver participants or a home owned or leased and operated by a licensed shared living provider.

c. The shared living waiver home must meet department's operational, programming and quality assurances for home and community-based services.

d. The shared living provider is responsible for the overall assurances of health and safety for all participants.

D. Service Exclusions

1. ...

2. Payments shall not be made for environmental accessibility adaptations when the provider owns or leases the residence.

3. Participants may receive one-time transitional services only if the participant owns or leases the home and the service provider is not the owner or landlord of the home.

a. - d. Repealed.

4. MFP participants cannot participate in ROW shared living services which serve more than four persons in a single residence.

5. Transportation-community access services cannot be billed or provided for participants receiving shared living services, as this is a component of shared living services.

6. The following services are not available to participants receiving shared living services:

a. community living supports;

b. respite care services;

c. companion care;

d. host home; or

e. personal emergency response system.

E. Provider Qualifications. Providers must be approved by the department and have a current, valid license as a supervised independent living agency.

AUTHORITY NOTE: Promulgated in accordance with R.S. 36:254 and Title XIX of the Social Security Act.

HISTORICAL NOTE: Promulgated by the Department of Health and Hospitals, Office for Citizens with Developmental Disabilities, LR 33:2452 (November 2007), amended by the Department of Health and Hospitals, Bureau of Health Services Financing and the Office for Citizens with Developmental Disabilities, LR 38:

§16331. Specialized Medical Equipment and Supplies

Repealed.

AUTHORITY NOTE: Promulgated in accordance with R.S. 36:254 and Title XIX of the Social Security Act.

HISTORICAL NOTE: Promulgated by the Department of Health and Hospitals, Office for Citizens with Developmental Disabilities, LR 33:2452 (November 2007), repealed by the Department of Health and Hospitals, Bureau of Health Services Financing and the Office for Citizens with Developmental Disabilities, LR 38:

§16333. Support Coordination

A. Support Coordination services are provided to all ROW participants to assist them in gaining access to needed waiver services, Medicaid State Plan services, as well as needed medical, social, educational and other services, regardless of the funding source for the services. Support coordinators provide information and assistance to waiver participants by directing and managing their services in compliance with the rules and regulations governing case management services.

1. Support Coordinators shall be responsible for ongoing monitoring of the provision of services included in the participant's approved POC.

2. Support coordinators shall also participate in the evaluation and re-evaluation of the participant's POC.

B. Support coordinators are responsible for providing assistance to participants who choose the self-direction option with their review of the Self-Direction Employer Handbook and for being available to these participants for on-going support and help with carrying out their employer responsibilities.

C. Provider Qualifications. Providers must have a current, valid license as a case management agency and meet all other requirements for targeted case management services as set forth in LAC 50:XV.Chapter 105 and the Medicaid Targeted Case Management Manual.

AUTHORITY NOTE: Promulgated in accordance with R.S. 36:254 and Title XIX of the Social Security Act.

HISTORICAL NOTE: Promulgated by the Department of Health and Hospitals, Office for Citizens with Developmental Disabilities, LR 33:2453 (November 2007), amended by the Department of Health and Hospitals, Bureau of Health Services Financing and the Office for Citizens with Developmental Disabilities, LR 38:

§16335. Supported Employment

A. Supported Employment provides assistance in an integrated work setting to assist in the achievement and attainment of work related skills and includes on-going support to maintain employment.

1. - 3. Repealed.

B. Supported employment services include:

1. …

2. services that assist a participant to develop and operate a micro-enterprise;

a. This service consists of:

i. assisting the participant to identify potential business opportunities;

ii. …

iii. identification of the supports that are necessary in order for the participant to operate the business; and

iv. …

3. enclave services which is an employment situation in competitive employment in which a group of eight or fewer workers with disabilities are working at a particular work setting. The workers with disabilities may be disbursed throughout the company and among workers without disabilities or congregated as a group in one part of the business;

4. mobile work crews which is a group of eight or fewer workers with disabilities who perform work in a variety of locations under the supervision of a permanent employment specialist (job coach/supervisor); and

5. all transportation from the agency to all work sites related to provision of the service. The provider is responsible for furnishing the transportation.

C. Service Limits

1. The required minimum number of service hours per day per participant is as follows for:

a. individual placement services, the minimum is one hour;

b. services that assist a participant to develop and operate a micro-enterprise, the minimum is one hour;

c. an enclave, the minimum is 2.5 hours; and

d. a mobile work crew, the minimum is 2.5 hours.

2. Two half-day units may be billed if the participant spends a minimum of five hours at the service site.

3. Participants may receive more than one vocational or habilitative service per day as long as the service and billing requirements for each service are met.

4. Transportation to and from the service site is offered and billable as a component of the support employment service; however, transportation is payable only when a supported employment service is provided on the same day.

D. Service Exclusions

1. ...

2. Any time less than one hour for individual placement and micro-enterprise is not billable or payable.

3. - 3.c. ...

4. Any time less than 2.5 hours for enclaves and mobile crews is not billable or payable.

5. ...

a. Travel training for the purpose of teaching the recipient how to use transportation services may be included in determining the total service numbers hours provided per day, but only for the period of time specified in the POC.

6. - 6.c. ...

7. Services are not available to individuals who are eligible to participate in programs funded under the Rehabilitation Act of 1973 or the Individuals with Disabilities Education Act.

8. No rounding up of hours is allowed.

E. Provider Qualifications. In order to enroll in the Medicaid Program, providers must have a compliance certificate from the Louisiana Rehabilitation Services as a Community Rehabilitation Program or a current, valid license as an adult day care center.

AUTHORITY NOTE: Promulgated in accordance with R.S. 36:254 and Title XIX of the Social Security Act.

HISTORICAL NOTE: Promulgated by the Department of Health and Hospitals, Office for Citizens with Developmental Disabilities, LR 33:2453 (November 2007), amended by the Department of Health and Hospitals, Bureau of Health Services Financing and the Office for Citizens with Developmental Disabilities, LR 38:

§16337. Transportation-Community Access

A. Transportation-community access services enable participants to gain access to waiver and other community services, activities and resources. These services are necessary to increase independence, productivity, community inclusion and to support self-directed employees benefits as outlined in the participant's POC. Transportation-community access services shall be offered as documented in the participant's approved POC.

1. The participant must be present to receive this service.

2. Whenever possible, the participant must utilize the following resources for transportation:

a. - b. ...

B. Service Limits

1. Community access trips are limited to three per day and must be arranged for geographic efficiency.

2. Greater than three trips per day require approval from the department or its designee.

a. Repealed.

C. Service Exclusions

1. Transportation services offered through ROW shall not replace the medical transportation services covered under the Medicaid State Plan or transportation services provided as a means to get to and from school.

2. Separate payment will not be made for transportation-community access and the following services:

a. shared living services; or

b. community living services.

3. Transportation-community access will not be used to transport participants to day habilitation, pre-vocational, or supported employment services.

D. Provider Qualifications. Friends and family members who furnish Transportation-Community Access services to waiver participants must be enrolled as Medicaid Friends and Family Transportation providers.

1. In order to receive reimbursement for transporting Medicaid recipients to waiver services, family and friends must maintain:

a. the state minimum automobile liability insurance coverage;

b. a current state inspection sticker; and

c. a current valid driver's license.

2. No special inspection by the Medicaid agency will be conducted.

a. - b. Repealed.

3. Documentation of compliance with the three listed requirements for this class of provider must be submitted when enrollment in the Medicaid agency is sought. Acceptable documentation shall be the signed statement of the individual enrolling for payment that all three requirements are met.

a. The statement must also have the signature of two witnesses.

4. Family and friends transportation providers are limited to transporting up to three specific waiver participants.

E. Vehicle Requirements. All vehicles utilized by for profit and non-profit transportation services providers for transporting waiver recipients must comply with all of the applicable state laws and regulations and are subject to inspection by the department or its designee.

F.1. - G. Repealed.

AUTHORITY NOTE: Promulgated in accordance with R.S. 36:254 and Title XIX of the Social Security Act.

HISTORICAL NOTE: Promulgated by the Department of Health and Hospitals, Office for Citizens with Developmental Disabilities, LR 33:2454 (November 2007), amended by the Department of Health and Hospitals, Bureau of Health Services Financing and the Office for Citizens with Developmental Disabilities, LR 38:

Chapter 165. Self-Direction Initiative

§16501. Self-Direction Service Option

A. The self-direction initiative is a voluntary, self-determination option which allows the waiver participant to coordinate the delivery of designated ROW services through an individual direct support professional rather than through a licensed, enrolled provider agency. Selection of this option requires that the recipient utilize a payment mechanism

approved by the department to manage the required fiscal functions that are usually handled by a provider agency.

B. Recipient Responsibilities. Waiver participants choosing the self-direction service option must understand the rights, risks and responsibilities of managing their own care and individual budget. If the participant is unable to make decisions independently, he must have an authorized representative who understands the rights, risks and responsibilities of managing his care and supports within his individual budget. Responsibilities of the participant or authorized representative include:

1. - 2. …

a. Participants must adhere to the health and welfare safeguards identified by the support team, including:

i. …

ii. compliance with the requirement that employees under this option must have criminal background checks prior to working with waiver participants;

3. …

a. This annual budget is determined by the recommended service hours listed in the participant's POC to meet his needs.

b. The participant's individual budget includes a potential amount of dollars within which the participant, or his authorized representative, exercises decision-making responsibility concerning the selection of services and service providers.

C. Termination of Self-Direction Service Option. Termination of participation in the self-direction service option requires a revision of the POC, the elimination of the fiscal agent and the selection of the Medicaid-enrolled waiver service provider(s) of choice.

1. Voluntary Termination. The waiver participant may choose at any time to withdraw from the self-direction service option and return to the traditional provider agency management of services.

2. Involuntary Termination. The department may terminate the self-direction service option for a participant and require him to receive provider-managed services under the following circumstances:

a. the health or welfare of the participant is compromised by continued participation in the self-direction service option;

b. the participant is no longer able to direct his own care and there is no responsible representative to direct the care;

c. there is misuse of public funds by the participant or the authorized representative; or

d. over three payment cycles in the period of a year, the participant or authorized representative:

i. …

ii. fails to follow the personal purchasing plan and the POC;

C.2.d.iii. - D. …

E. Relief coverage for scheduled or unscheduled absences, which are not classified as respite care services, can be covered by other participant-directed providers and the terms can be part of the agreement between the participant and the primary companion care provider.

AUTHORITY NOTE: Promulgated in accordance with R.S. 36:254 and Title XIX of the Social Security Act.

HISTORICAL NOTE: Promulgated by the Department of Health and Hospitals, Office for Citizens with Developmental Disabilities, LR 33:2455 (November 2007), amended by the Department of Health and Hospitals, Bureau of Health Services Financing and the Office for Citizens with Developmental Disabilities, LR 38:

Chapter 167. Provider Participation

§16701. General Provisions

A. …

1. meet all of the requirements for licensure and the standards for participation in the Medicaid Program as a home and community-based services provider in accordance with state laws and the rules promulgated by the department;

2. comply with the regulations and requirements specified in LAC 50:XXI, Subparts 1 and 13 and the ROW provider manual;

3. comply with all of the state laws and regulations for conducting business in Louisiana, and when applicable, with the state requirements for designation as a non-profit organization; and

4. comply with all of the training requirements for providers of waiver services.

B. Providers must maintain adequate documentation to support service delivery and compliance with the approved POC and provide said documentation upon the department's request.

C. In order for a provider to bill for services, the waiver participant and the direct service worker or professional services practitioner rendering service must be present at the time the service is rendered.

1. Exception. The following services may be provided when the participant is not present:

a. - c. ...

2. All services must be documented in service notes which describe the services rendered and progress towards the participant's personal outcomes and his/her POC.

D. If transportation is provided as part of a waiver service, the provider must comply with all of the state laws and regulations applicable to vehicles and drivers.

E. All services rendered shall be prior approved and in accordance with the POC.

F. Providers, including direct care staff, cannot live in the same residence as the participant, except host home contractors and companion care workers.

AUTHORITY NOTE: Promulgated in accordance with R.S. 36:254 and Title XIX of the Social Security Act.

HISTORICAL NOTE: Promulgated by the Department of Health and Hospitals, Office for Citizens with Developmental Disabilities, LR 33:2455 (November 2007), amended by the Department of Health and Hospitals, Bureau of Health Services Financing and the Office for Citizens with Developmental Disabilities, LR 38:

§16703. Staffing Restrictions and Requirements

A. Payments shall not be made to persons who are legally responsible for the care of the waiver participants which include:

1. parents of minor children;

2. spouses for each other;

3. legal guardians for adults or children with developmental disabilities; or

4. parents for their adult child with developmental disabilities, regardless of the legal status of the adult child.

B. In order to receive payment, relatives must meet the criteria for the provision of the service and the same provider qualifications specified for the service as other providers not related to the participant.

1. Relatives must also comply with the following requirements:

a. become an employee of the participant's chosen waiver provider agency;

b. become a Medicaid enrolled provider agency; or

c. if the self-direction option is selected, relatives must:

i. become an employee of the self-direction participant; and

ii. have a Medicaid provider agreement executed by the fiscal agent as authorized by the Medicaid agency.

AUTHORITY NOTE: Promulgated in accordance with R.S. 36:254 and Title XIX of the Social Security Act.

HISTORICAL NOTE: Promulgated by the Department of Health and Hospitals, Bureau of Health Services Financing and the Office for Citizens with Developmental Disabilities, LR 38:

Chapter 169. Reimbursement

§16901. Reimbursement Methodology

A. Reimbursement for the following services shall be a prospective flat rate for each approved unit of service provided to the waiver participant. One quarter hour (15 minutes) is the standard unit of service, which covers both the service provision and administrative costs for these services:

1. - 3.e. …

f. registered dietician;

4. support coordination; or

5. supported employment:

a. individual placement; and

b. micro-enterprise.

6. Repealed.

B. The following services are reimbursed at the cost of the adaptation device, equipment or supply item:

1. environmental accessibility adaptations; and

a. Upon completion of the environmental accessibility adaptations and prior to submission of a claim for reimbursement, the provider shall give the participant a certificate of warranty for all labor and installation work and supply the participant with all manufacturers' warranty certificates.

2. Assistive Technology/Specialized Medical Equipment and Supplies

3. Repealed.

C. The following services are reimbursed at a per diem rate:

1. …

2. companion cares; and

3. shared living services;

a. Per diem rates are established based on the number of individuals sharing the living service module for both shared living non-conversion and shared living conversion services.

D. The following services are reimbursed at a per one-half-day unit of service based on a minimum of 2.5 hours spent on-site by the participant:

1. day habilitation;

2. pre-vocational; and

3. supported employment:

a. mobile crew; and

b. enclave.

E. ...

F. Nursing services are reimbursed at either an hourly or per visit rate for the allowable procedure codes.

G. ...

H. Transition expenses from an ICF/DD or nursing facility to a community living setting are reimbursed at the cost of the service(s) up to a lifetime maximum rate of $3,000.

I. - J. ...

K. Effective for dates of service on or after August 1, 2010, the reimbursement for residential options waiver services shall be reduced by 2 percent of the rates in effect on July 31, 2010.

1. The following services shall be excluded from the rate reduction:

a. personal emergency response services;

b. environmental accessibility adaption services;

c. specialized medical equipment and supplies; and

d. support coordination services.

AUTHORITY NOTE: Promulgated in accordance with R.S. 36:254 and Title XIX of the Social Security Act.

HISTORICAL NOTE: Promulgated by the Department of Health and Hospitals, Office for Citizens with Developmental Disabilities, LR 33:2456 (November 2007), amended by the Department of Health and Hospitals, Bureau of Health Services Financing and the Office for Citizens with Developmental Disabilities, LR 38:

§16903. Direct Support Staff Wages

A. In order to maximize staffing stability and minimize turnover among direct support staff, providers of the following services furnished under the residential options waiver are required to pay direct support workers an hourly wage that is at least 29 percent ($1.50) more than the federal minimum wage in effect as of July 23, 2007 or the current federal minimum wage, whichever is higher:

1. community living supports;

2. respite services-out of home;

3. shared living;

4. day habilitation;

5. prevocational services; and

6. supported employment.

7. Repealed.

AUTHORITY NOTE: Promulgated in accordance with R.S. 36:254 and Title XIX of the Social Security Act.

HISTORICAL NOTE: Promulgated by the Department of Health and Hospitals, Office for Citizens with Developmental Disabilities, LR 33:2456 (November 2007), amended by the Department of Health and Hospitals, Bureau of Health Services Financing and the Office for Citizens with Developmental Disabilities, LR 38:

Interested persons may submit written comments to J. Ruth Kennedy, Bureau of Health Services Financing, P.O. Box 91030, Baton Rouge, LA 70821-9030. She is responsible for responding to inquiries regarding this Emergency Rule. A copy of this Emergency Rule is available for review by interested parties at parish Medicaid offices.

Bruce D. Greenstein
Secretary

1208#106

DECLARATION OF EMERGENCY

Department of Health and Hospitals
Bureau of Health Services Financing
and
Office of Aging and Adult Services

Home and Community-Based Services Waivers
Support Coordination Standards for Participation
(LAC 50:XXI.Chapter 5)

The Department of Health and Hospitals, Bureau of Health Services Financing and the Office of Aging and Adult Services amends LAC 50:XXI.Chapter 5 in the Medical Assistance Program as authorized by R.S. 36:254 and pursuant to Title XIX of the Social Security Act. This Emergency Rule is promulgated in accordance with the provisions of the Administrative Procedure Act, R.S. 49:953(B)(1) et seq., and shall be in effect for the maximum period allowed under the Act or until adoption of the final Rule, whichever occurs first.

The Department of Health and Hospitals, Bureau of Health Services Financing and the Office of Aging and Adult Services (OAAS) provide Medicaid coverage for support coordination services rendered to waiver participants who receive services in home and community-based waiver programs administered by OAAS. The department promulgated an Emergency Rule which adopted provisions to establish Standards for Participation for support coordination agencies that provide support coordination services to participants in OAAS-administered waiver programs (*Louisiana Register*, Volume 37, Number 12). The department now proposes to amend the December 20, 2011 Emergency Rule in order to clarify the provisions governing supporting coordination services rendered to participants of OAAS-administered waiver programs. This action is being taken to promote the health and welfare of waiver participants and to ensure that these services are rendered in an efficient and cost-effective manner.

Effective August 20, 2012, the Department of Health and Hospitals, Bureau of Health Services Financing and the Office of Aging and Adult Services amend the provisions of the December 20, 2011 Emergency Rule which established Standards for Participation for support coordination agencies that provide services to participants in waiver programs administered by the Office of Aging and Adult Services.

Title 50
PUBLIC HEALTH—MEDICAL ASSISTANCE
Part XXI. Home and Community Based Services Waivers
Subpart 1. General Provisions
Chapter 5. Support Coordination Standards for Participation for Office of Aging and Adult Services Waiver ProgramsSubchapter A. General Provisions

§501. Introduction

A. The Department of Health and Hospitals (DHH) establishes these minimum Standards for Participation which provides the core requirements for support coordination services provided under home and community-based waiver programs administered by the Office of Aging and Adult Services (OAAS). OAAS must determine the adequacy of quality and protection of waiver participants in accordance with the provisions of these standards.

B. OAAS, or its designee, is responsible for setting the standards for support coordination, monitoring the provisions of this Rule, and applying administrative sanctions for failures by support coordinators to meet the minimum standards for participation in serving participants of OAAS-administered waiver programs.

C. Support coordination are services that will assist participants in gaining access to needed waiver and other state plan services, as well as needed medical, social, educational, housing, and other services, regardless of the funding source for these services.

D. Upon promulgation of the final Rule governing these standards for participation, existing support coordination providers of OAAS-administered waiver programs shall be required to meet the requirements of this Chapter as soon as possible and no later than six months from the promulgation of this Rule.

E. If, in the judgment of OAAS, application of the requirements stated in these standards would be impractical in a specified case; such requirements may be modified by the OAAS Assistant Secretary to allow alternative arrangements that will secure as nearly equivalent provision of services as is practical. In no case will the modification afford less quality or protection, in the judgment of OAAS, than that which would be provided with compliance of the provisions contained in these standards.

1. Requirement modifications may be reviewed by the OAAS Assistant Secretary and either continued or cancelled.

AUTHORITY NOTE: Promulgated in accordance with R.S. 36:254.

HISTORICAL NOTE: Promulgated by the Department of Health and Hospitals, Bureau of Health Services Financing and the Office of Aging and Adult Services, LR 38:

§503. Certification Requirements

A. All agencies that provide support coordination to OAAS-administered home and community-based waivers must be certified by the Department of Health and Hospitals. It shall be unlawful to operate as a support coordination agency for OAAS-administered waivers without being certified by the department.

B. In order to provide support coordination services for OAAS-administered home and community-based waiver programs, the agency must:

1. be certified and meet the standards for participation requirements as set forth in this Rule;
2. sign a performance agreement with OAAS;
3. assure staff attends all training mandated by OAAS;
4. enroll as a Medicaid support coordination agency in all regions in which it intends to provide services for OAAS-administered home and community-based services; and
5. comply with all DHH and OAAS policies and procedures.

AUTHORITY NOTE: Promulgated in accordance with R.S. 36:254.

HISTORICAL NOTE: Promulgated by the Department of Health and Hospitals, Bureau of Health Services Financing and Office of Aging and Adult Services, LR 38:

§505. Certification Issuance

A. A certification shall:

1. be issued only to the entity named in the certification application;

2. be valid only for the support coordination agency to which it is issued after all applicable requirements are met;

3. enable the support coordination agency to provide support coordination for OAAS-administered home and community-based waivers within the specified DHH region; and

4. be valid for the time specified on the certification, unless revoked, suspended, modified or terminated prior to that date.

B. Provisional certification may be granted when the agency has deficiencies which are not a danger to the health and welfare of clients. Provisional licenses shall be issued for a period not to exceed 90 days.

C. Initial certification shall be issued by OAAS based on the survey report of DHH, or its designee.

D. Unless granted a waiver by OAAS, a support coordination agency shall provide such services only to waiver participants residing in the agency's designated DHH region.

AUTHORITY NOTE: Promulgated in accordance with R.S. 36:254.

HISTORICAL NOTE: Promulgated by the Department of Health and Hospitals, Bureau of Health Services Financing and Office of Aging and Adult Services, LR 38:

§507. Certification Refusal or Revocation and Fair Hearing

A. A certification may be revoked or refused if applicable certification requirements, as determined by OAAS or its designee, have not been met. Certification decisions are subject to appeal and fair hearing, in accordance with R.S. 46:107(A)(3).

AUTHORITY NOTE: Promulgated in accordance with R.S. 36:254.

HISTORICAL NOTE: Promulgated by the Department of Health and Hospitals, Bureau of Health Services Financing and Office of Aging and Adult Services, LR 38:

§509. Certification Inspections

A. Certification inspections are usually annual but may be conducted at any time. No advance notice is given. Surveyors must be given access to all of the areas in the facility and all relevant files and records.

AUTHORITY NOTE: Promulgated in accordance with R.S. 36:254.

HISTORICAL NOTE: Promulgated by the Department of Health and Hospitals, Bureau of Health Services Financing and Office of Aging and Adult Services, LR 38:

Subchapter B. Administration and Organization

§513. Governing Body

A. A support coordination agency shall have an identifiable governing body with responsibility for and authority over the policies and activities of the agency.

1. An agency shall have documents identifying all members of the governing body, their addresses, their terms of membership, officers of the governing body and terms of office of any officers.

2. The governing body shall be comprised of three or more persons and shall hold formal meetings at least twice a year.

3. There shall be written minutes of all formal meetings of the governing body and by-laws specifying frequency of meetings and quorum requirements.

B. The governing body of a support coordination agency shall:

1. ensure the agency's continual compliance and conformity with all relevant federal, state, local and municipal laws and regulations;

2. ensure that the agency is adequately funded and fiscally sound;

3. review and approve the agency's annual budget;

4. designate a person to act as administrator and delegate sufficient authority to this person to manage the agency;

5. formulate and annually review, in consultation with the administrator, written policies concerning the agency's philosophy, goals, current services, personnel practices, job descriptions and fiscal management;

6. annually evaluate the administrator's performance;

7. have the authority to dismiss the administrator;

8. meet with designated representatives of the department whenever required to do so;

9. inform the department, or its designee, prior to initiating any substantial changes in the services provided by the agency;

10. ensure that a continuous quality improvement (CQI) process is in effect; and

11. ensure that services are provided in a culturally sensitive manner as evidenced by staff trained in cultural awareness and related policies and procedures.

C. A support coordination agency shall maintain an administrative file that includes:

1. documents identifying the governing body;

2. a list of members and officers of the governing body, along with their addresses and terms of membership;

3. minutes of formal meetings and by-laws of the governing body, if applicable;

4. documentation of the agency's authority to operate under state law;

5. an organizational chart of the agency which clearly delineates the line of authority;

6. all leases, contracts and purchases-of-service agreements to which the agency is a party;

7. insurance policies;

8. annual budgets and, if performed, audit reports;

9. the agency's policies and procedures; and

10. documentation of any corrective action taken as a result of external or internal reviews.

AUTHORITY NOTE: Promulgated in accordance with R.S. 36:254.

HISTORICAL NOTE: Promulgated by the Department of Health and Hospitals, Bureau of Health Services Financing and Office of Aging and Adult Services, LR 38:

§515. Business Location and Operations

A. Each support coordination agency shall have a business location which shall not be in an occupied personal residence. The business location shall be in the DHH region for which the certification is issued and shall be where the agency:

1. maintains staff to perform administrative functions;

2. maintains the agency's personnel records;

3. maintains the agency's participant service records; and

4. holds itself out to the public as being a location for receipt of participant referrals.

B. The business location shall have:

1. a published nationwide toll-free telephone number answered by a person which is available and accessible 24 hours a day, seven days a week, including holidays;

2. a published local business number answered by agency staff during the posted business hours;

3. a business fax number that is operational 24 hours a day, seven days a week, including holidays;

4. internet access and a working e-mail address which shall be provided to OAAS;

5. hours of operation, which must be at least 30 hours a week, Monday through Friday, posted in a location outside of the business that is easily visible to persons receiving services and the general public; and

6. at least one staff person on the premises during posted hours of operation.

C. Records and other confidential information shall not be stored in areas deemed to be common areas.

AUTHORITY NOTE: Promulgated in accordance with R.S. 36:254.

HISTORICAL NOTE: Promulgated by the Department of Health and Hospitals, Bureau of Health Services Financing and Office of Aging and Adult Services, LR 38:

§517. Financial Management

A. The agency must establish a system of financial management and staffing to assure maintenance of complete and accurate accounts, books and records in keeping with generally accepted accounting principles.

B. The agency must not permit public funds to be paid or committed to be paid, to any person who is a member of the governing board or administrative personnel who may have any direct or indirect financial interest, or in which any of these persons serve as an officer or employee, unless the services or goods involved are provided at a competitive cost or under terms favorable to the agency. The agency shall have a written disclosure of any financial transaction with the agency in which a member of the governing board, administrative personnel, or his/her immediate family is involved.

C. The agency must obtain any necessary performance bonds and/or lines of credit as required by the department.

D. The agency must have adequate and appropriate general liability insurance for the protection of its participants, staff, facilities, and the general public.

AUTHORITY NOTE: Promulgated in accordance with R.S. 36:254.

HISTORICAL NOTE: Promulgated by the Department of Health and Hospitals, Bureau of Health Services Financing and Office of Aging and Adult Services, LR 38:

§519. Policy and Procedures

A. The support coordination agency shall have written policies and procedures approved by the owner or governing body which must be implemented and followed that address at a minimum the following:

1. confidentiality and confidentiality agreements;
2. security of files;
3. publicity and marketing, including the prohibition of illegal or coercive inducement, solicitation and kickbacks;
4. personnel;
5. participant rights;
6. grievance procedures;
7. emergency preparedness;
8. abuse and neglect reporting;
9. critical incident reporting;
10. worker safety;
11. documentation; and
12. admission and discharge procedures.

AUTHORITY NOTE: Promulgated in accordance with R.S. 36:254.

HISTORICAL NOTE: Promulgated by the Department of Health and Hospitals, Bureau of Health Services Financing and Office of Aging and Adult Services, LR 38:

§521. Organizational Communication

A. The agency must establish procedures to assure adequate communication among staff to provide continuity of services to the participant and to facilitate feedback from staff, participants, families, and when appropriate, the community at large.

B. The agency must have brochures and make them available to OAAS or its designee. The brochures must include the following information:

1. that each participant has the freedom to choose their providers and that their choice of provider does not affect their eligibility for waiver, state plan, or support coordination services;

2. that a participant receiving support coordination through OAAS may contact the OAAS Help Line for information, assistance with, or questions about OAAS programs;

3. the OAAS Help Line number along with the appropriate OAAS regional office telephone numbers;

4. information, including the Health Standards Section Complaint Line, on where to make complaints against support coordinators, support coordination agencies, and providers; and

5. a description of the agency, services provided, current address, and the agency's local and nationwide toll-free number.

C. The brochure may also include the agency's experience delivering support coordination services.

D. The support coordination agency shall be responsible for:

1. obtaining written approval of the brochure from OAAS prior to distributing to applicants/participants of OAAS-administered waiver programs;

2. providing OAAS staff or its designee with adequate supplies of the OAAS-approved brochure; and

3. timely completing revisions to the brochure, as requested by OAAS, to accurately reflect all program changes as well as other revisions OAAS deems necessary.

AUTHORITY NOTE: Promulgated in accordance with R.S. 36:254.

HISTORICAL NOTE: Promulgated by the Department of Health and Hospitals, Bureau of Health Services Financing and Office of Aging and Adult Services, LR 38:

Subchapter C. Provider Responsibilities

§525. General Provisions

A. Any entity wishing to provide support coordination services for any OAAS-administered home and community-based waiver program shall meet all of the Standards for Participation contained in this Rule, unless otherwise specifically noted within these provisions.

B. The support coordination agency shall also abide by and adhere to any state law, Rule, policy, procedure,

performance agreement, manual or memorandum pertaining to the provision of support coordination services for OAAS-administered home and community-based waiver programs.

C. Failure to comply with the requirements of these Standards for Participation may result in sanctions including, but not limited to:

1. recoupment of funds;
2. cessation of linkages;
3. citation of deficient practice and plan of correction submission;
4. removal from the Freedom of Choice list; or
5. decertification as a support coordination agency for OAAS-administered home and community-based waiver services.

D. A support coordination agency shall make any required information or records, and any information reasonably related to assessment of compliance with these requirements, available to the department.

E. Designated representatives of the department, in the performance of their mandated duties, shall be allowed by a support coordination agency to:

1. inspect all aspects of a support coordination agency operations which directly or indirectly impact participants; and
2. conduct interviews with any staff member or participant of the agency.

F. A support coordination agency shall, upon request by the department, make available the legal ownership documents of the agency.

G. Support coordination agencies must comply with all of the department's systems/software requirements.

H. Support coordination agencies shall, at a minimum:

1. maintain and/or have access to a comprehensive resource directory containing all of the current inventory of existing formal and informal resources that identifies services within the geographic area which shall address the unique needs of participants of OAAS-administered home and community-based waiver programs;
2. establish linkages with those resources;
3. demonstrate knowledge of the eligibility requirements and application procedures for federal, state and local government assistance programs, which are applicable to participants of OAAS-administered home and community-based waiver programs;
4. employ a sufficient number of support coordinators and supervisory staff to comply with OAAS staffing, continuous quality improvement (CQI), timeline, workload, and performance requirements;
5. demonstrate administrative capacity and the financial resources to provide all core elements of support coordination services and ensure effective service delivery in accordance with programmatic requirements;
6. assure that all agency staff is employed in accordance with Internal Revenue Service (IRS) and Department of Labor regulations (subcontracting of individual support coordinators and/or supervisors is prohibited);
7. have appropriate agency staff attend trainings, as mandated by DHH and OAAS;
8. have a documented CQI process;
9. document and maintain records in accordance with federal and state regulations governing confidentiality and program requirements;
10. assure each participant has freedom of choice in the selection of available qualified providers and the right to change providers in accordance with program guidelines; and
11. assure that the agency and support coordinators will not provide both support coordination and Medicaid-reimbursed direct services to the same participant(s).

I. Abuse and Neglect. Support coordination agencies shall establish policies and procedures relative to the reporting of abuse and neglect of participants, pursuant to the provisions of R.S. 15:1504-1505, R.S. 40:2009.20 and any subsequently enacted laws. Providers shall ensure that staff complies with these regulations.

AUTHORITY NOTE: Promulgated in accordance with R.S. 36:254.

HISTORICAL NOTE: Promulgated by the Department of Health and Hospitals, Bureau of Health Services Financing and Office of Aging and Adult Services, LR 38:

§527. Support Coordination Services

A. Support coordination is services that will assist participants in gaining access to needed waiver and other State Plan services, as well as needed medical, social, educational, housing and other services, regardless of the funding source for these services. Support coordination agencies shall be required to perform the following core elements of support coordination services:

1. intake;
2. assessment;
3. plan of care development and revision;
4. linkage to direct services and other resources;
5. coordination of multiple services among multiple providers
6. monitoring/follow-up;
7. reassessment;
8. evaluation and re-evaluation of level of care and need for waiver services;
9. ongoing assessment and mitigation of health, behavioral and personal safety risk;
10. responding to participant crisis;
11. critical incident management; and
12. transition/discharge and closure.

B. The support coordination agency shall also be responsible for assessing, addressing and documenting delivery of services, including remediation of difficulties encountered by participants in receiving direct services.

C. A support coordination agency shall not refuse to serve, or refuse to continue to serve, any individual who chooses/has chosen its agency unless there is documentation to support an inability to meet the individual's health and welfare needs, or all previous efforts to provide service and supports have failed and there is no option but to refuse services.

1. OAAS must be immediately notified of the circumstances surrounding a refusal by a support coordination agency to provide/continue to provide services.
2. This requirement can only be waived by OAAS.

D. Support coordination agencies must establish and maintain effective communication and good working

relationships with providers of services to participants served by the agency.

AUTHORITY NOTE: Promulgated in accordance with R.S. 36:254.

HISTORICAL NOTE: Promulgated by the Department of Health and Hospitals, Bureau of Health Services Financing and Office of Aging and Adult Services, LR 38:

§529. Transfers and Discharges

A. All participants of OAAS-administered waiver programs must receive support coordination services. However, a participant has the right to choose a support coordination agency. This right includes the right to be discharged from his/her current support coordination agency and be transferred to another support coordination agency.

B. Upon notice by the participant or his/her authorized representative that the participant has selected another support coordination agency or the participant has decided to discontinue participation in the waiver program, the agency shall have the responsibility of planning for the participant's transfer or discharge.

C. The support coordination agency shall also have the responsibility of planning for a participant's transfer when the support coordination agency ceases to operate or when the participant moves from the geographical region serviced by the support coordination agency.

D. The transfer or discharge responsibilities of the support coordinator shall include:

1. holding a transfer or discharge planning conference with the participant, his/her family, providers, legal representative and advocate, if such are known, in order to facilitate a smooth transfer or discharge, unless the participant declines such a meeting;

2. providing a current plan of care to the receiving support coordination agency (if applicable);and

3. preparing a written discharge summary. The discharge summary shall include, at a minimum, a summary on the health, behavioral, and social issues of the client and shall be provided to the receiving support coordination agency (if applicable).

E. The written discharge summary shall be completed within five working days of any of the following:

1. notice by the participant or authorized representative that the participant has selected another support coordination agency;

2. notice by the participant or authorized representative that the participant has decided to discontinue participation in the waiver program;

3. notice by the participant or authorized representative that the participant will be transferring to a DHH geographic region not serviced by his/her current support coordination agency; or

4. notice from OAAS or its designee that "good cause" has been established by the support coordination agency to discontinue services.

F. The support coordination agency shall not coerce the participant to stay with the support coordination agency or interfere in any way with the participant's decision to transfer. Failure to cooperate with the participant's decision to transfer to another support coordination agency will result in adverse action by department.

G. If a support coordination agency closes, the agency must give OAAS at least 60 days written notice of its intent to close. Where transfer of participants is necessary due to the support coordination agency closing, the written discharge summary for all participants served by the agency shall be completed within 10 working days of the notice to OAAS of the agency's intent to close.

AUTHORITY NOTE: Promulgated in accordance with R.S. 36:254.

HISTORICAL NOTE: Promulgated by the Department of Health and Hospitals, Bureau of Health Services Financing and Office of Aging and Adult Services, LR 38:

§531. Staffing Requirements

A. Agencies must maintain sufficient staff to comply with OAAS staffing, timeline, workload, and performance requirements. This includes, but is not limited to, including sufficient support coordinators and support coordinator supervisors that have passed all of the OAAS training and certification requirements. In no case may an agency have less than one certified support coordination supervisor and less than one certified support coordinator. Agencies may employ staff who are not certified to perform services or requirements other than assessment and care planning.

B. Agencies must maintain sufficient supervisory staff to comply with OAAS supervision and CQI requirements. Support coordination supervisors must be continuously available to support coordinators by telephone.

1. Each Support Coordination agency must have and implement a written plan for supervision of all support coordination staff.

2. Each supervisor must maintain a file on each support coordinator supervised and hold supervisory sessions and evaluate each support coordinator at least annually.

C. Agencies shall employ or contract a licensed registered nurse to serve as a consultant. The nurse consultant shall be available a minimum of 16 hours per month.

D. Agencies shall ensure that staff is available at times which are convenient and responsive to the needs of participants and their families.

E. Support coordinators may only carry caseloads that are composed exclusively of OAAS participants. Support coordination supervisors may only supervise support coordinators that carry caseloads that are composed exclusively of OAAS participants.

AUTHORITY NOTE: Promulgated in accordance with R.S. 36:254.

HISTORICAL NOTE: Promulgated by the Department of Health and Hospitals, Bureau of Health Services Financing and Office of Aging and Adult Services, LR 38:

§533. Personnel Standards

A. Support coordinators must meet one of the following requirements:

1. a bachelor's or masters degree in social work from a program accredited by the Council on Social Work Education;

2. a bachelor's or masters degree in nursing (RN) currently licensed in Louisiana (one year of paid experience as a licensed RN will substitute for the degree);

3. a bachelor's or masters degree in a human service related field which includes:

a. psychology;

b. education;

c. counseling;

d. social services;

e. sociology;
f. philosophy;
g. family and participant sciences;
h. criminal justice;
i. rehabilitation services;
j. substance abuse treatment;
k. gerontology; and
l. vocational rehabilitation; or

4. a bachelor's degree in liberal arts or general studies with a concentration of at least 16 hours in one of the fields in §533.A.3.a.-l. of this section.

B. Support coordination supervisors must meet the following requirements:

1. a bachelor's or masters degree in social work from a program accredited by the council on social work education and two years of paid post degree experience in providing support coordination services;

2. a bachelor's or masters degree in nursing (RN)(one year of experience as a licensed RN will substitute for the degree) and two years of paid post degree experience in providing support coordination services;

3. a bachelor's or masters degree in a human service related field which includes: psychology, education, counseling, social services, sociology, philosophy, family and participant sciences, criminal justice, rehabilitation services, child development, substance abuse, gerontology, and vocational rehabilitation and two years of paid post degree experience in providing support coordination services; or

4. a bachelor's degree in liberal arts or general studies with a concentration of at least 16 hours in one of the following fields: psychology, education, counseling, social services, sociology, philosophy, family and participant sciences, criminal justice, rehab services, child development, substance abuse, gerontology, and vocational rehabilitation and two years of paid post degree experience in providing support coordination services.

C. Documentation showing that personnel standards have been met must be placed in the individual's personnel file.

AUTHORITY NOTE: Promulgated in accordance with R.S. 36:254.

HISTORICAL NOTE: Promulgated by the Department of Health and Hospitals, Bureau of Health Services Financing and Office of Aging and Adult Services, LR 38:

§535. Employment and Recruitment Practices

A. A support coordination agency shall have written personnel policies, which must be implemented and followed, that include:

1. a plan for recruitment, screening, orientation, ongoing training, development, supervision and performance evaluation of staff members;

2. a policy to prevent discrimination and comply with all state and federal employment practices and laws;

3. a policy to recruit, wherever possible, qualified persons of both sexes representative of cultural and racial groups served by the agency, including the hiring of qualified persons with disabilities;

4. written job descriptions for each staff position, including volunteers;

5. an employee grievance procedure that allows employees to make complaints without fear of retaliation; and

6. abuse reporting procedures that require all employees to report any incidents of abuse or mistreatment, whether that abuse or mistreatment is done by another staff member, a family member, a participant or any other person.

AUTHORITY NOTE: Promulgated in accordance with R.S. 36:254.

HISTORICAL NOTE: Promulgated by the Department of Health and Hospitals, Bureau of Health Services Financing and Office of Aging and Adult Services, LR 38:

§537. Orientation and Training

A. Support coordinators must receive necessary orientation and periodic training on the provision of support coordination services arranged or provided through their agency at the agency's expense.

B. Orientation of at least 16 hours shall be provided by the agency to all staff, volunteers and students within five working days of employment which shall include, at a minimum:

1. core OAAS support coordination requirements;
2. policies and procedures of the agency;
3. confidentiality;
4. documentation of case records;
5. participant rights protection and reporting of violations;
6. abuse and neglect policies and procedures;
7. professional ethics;
8. emergency and safety procedures;
9. infection control, including universal precautions; and
10. critical incident reporting.

C. In addition to the minimum 16 hours of orientation, all newly hired support coordinators must receive a minimum of 16 hours of training during the first 90 calendar days of employment which is related to the specific population served and knowledge, skills and techniques necessary to provide support coordination to the specific population. This training must be provided by an individual or organization with demonstrated knowledge of the training topic and the target population. Such resources may be identified and/or mandated by OAAS. These 16 hours of training must include, at a minimum:

1. fundamentals of support coordination;
2. interviewing techniques;
3. data management and record keeping;
4. communication skills;
5. risk assessment and mitigation;
6. person centered planning;
7. emergency preparedness planning;
8. resource identification;
9. back-up staff planning;
10. critical incident reporting; and
11. continuous quality improvement.

D. In addition to the agency-provided training requirements set forth above, support coordinators and support coordination supervisors must successfully complete all OAAS assessment and care planning training.

E. No support coordinator shall be given sole responsibility for a participant until all of the required training is satisfactorily completed and the employee possesses adequate abilities, skills, and knowledge of support coordination.

F. All support coordinators and support coordination supervisors must complete a minimum of 40 hours of

training per year. For new employees, the orientation cannot be counted toward the 40 hour minimum annual training requirement. The 16 hours of initial training for support coordinators required in the first 90 days of employment may be counted toward the 40 hour minimum annual training requirement. Routine supervision shall not be considered training.

G. A newly hired or promoted support coordination supervisor must, in addition to satisfactorily completing the orientation and training set forth above, also complete a minimum of 24 hours on all of the following topics prior to assuming support coordination supervisory responsibilities:

1. professional identification/ethics;
2. process for interviewing, screening and hiring staff;
3. orientation/in-service training of staff;
4. evaluating staff;
5. approaches to supervision;
6. managing workload and performance requirements;
7. conflict resolution;
8. documentation;
9. population specific service needs and resources;
10. participant evacuation tracking; and
11. the support coordination supervisor's role in CQI systems.

H. Documentation of all orientation and training must be placed in the individual's personnel file. Documentation must include an agenda and the name, title, agency affiliation of the training presenter(s) and other sources of training.

AUTHORITY NOTE: Promulgated in accordance with R.S. 36:254.

HISTORICAL NOTE: Promulgated by the Department of Health and Hospitals, Bureau of Health Services Financing and Office of Aging and Adult Services, LR 38:

§539. Participant Rights

A. Unless adjudicated by a court of competent jurisdiction, participants served by a support coordination agency shall have the same rights, benefits, and privileges guaranteed by the constitution and the laws of the United States and Louisiana.

B. There shall be written policies and procedures that protect the participant's welfare, including the means by which the protections will be implemented and enforced.

C. Each Support Coordination agency's written policies and procedures, at a minimum, shall ensure the participant's right to:

1. human dignity;
2. impartial access to treatment regardless of race, religion, sex, ethnicity, age or disability;
3. cultural access as evidenced by:
   a. interpretive services;
   b. translated materials;
   c. the use of native language when possible; and
   d. staff trained in cultural awareness;
4. have sign language interpretation;
5. utilize service animals and/or mechanical aids and devices that assist those persons with special needs to achieve maximum service benefits;
6. privacy;
7. confidentiality;
8. access his/her records upon the participant's written consent for release of information;
9. a complete explanation of the nature of services and procedures to be received, including:
   a. risks;
   b. benefits; and
   c. available alternative services;
10. actively participate in services, including:
   a. assessment/reassessment;
   b. plan of care development/revision; and
   c. discharge;
11. refuse specific services or participate in any activity that is against their will and for which they have not given consent;
12. obtain copies of the support coordination agency's complaint or grievance procedures;
13. file a complaint or grievance without retribution, retaliation or discharge;
14. be informed of the financial aspect of services;
15. be informed of any third-party consent for treatment of services, if appropriate;
16. personally manage financial affairs, unless legally determined otherwise;
17. give informed written consent prior to being involved in research projects;
18. refuse to participate in any research project without compromising access to services;
19. be free from mental, emotional and physical abuse and neglect;
20. be free from chemical or physical restraints;
21. receive services that are delivered in a professional manner and are respectful of the participant's wishes concerning their home environment;
22. receive services in the least intrusive manner appropriate to their needs;
23. contact any advocacy resources as needed, especially during grievance procedures; and
24. discontinue services with one provider and freely choose the services of another provider.

AUTHORITY NOTE: Promulgated in accordance with R.S. 36:254.

HISTORICAL NOTE: Promulgated by the Department of Health and Hospitals, Bureau of Health Services Financing and Office of Aging and Adult Services, LR 38:

§541. Grievances

A. The support coordination agency shall establish and follow a written grievance procedure to be used to process complaints by participants, their family member(s), or a legal representative that is designed to allow participants to make complaints without fear of retaliation. The written grievance procedure shall be provided to the participant.

B. Grievances must be periodically reviewed by the governing board in an effort to promote improvement in these areas.

AUTHORITY NOTE: Promulgated in accordance with R.S. 36:254.

HISTORICAL NOTE: Promulgated by the Department of Health and Hospitals, Bureau of Health Services Financing and Office of Aging and Adult Services, LR 38:

§543. Critical Incident Reporting

A. Support coordination agencies shall report critical incidents according to established OAAS policy including timely entries into the designated DHH critical incident database.

B. Support coordination agencies shall perform the following critical incident management actions:

1. coordinate immediate action to assure the participant is protected from further harm and respond to any emergency needs of the participant;

2. continue to follow up with the direct services provider agency, the participant, and others, as necessary, and update the Critical Incident Database follow-up notes until the incident is closed by OAAS;

3. convene any planning meetings that may be needed to resolve the critical incident or develop strategies to prevent or mitigate the likelihood of similar critical incidents from occurring in the future and revise the plan of care accordingly;

4. send the participant and direct services provider a copy of the Incident Participant Summary within 15 days after final supervisory review and closure by the regional office; and

5. during the plan of care review process, perform an annual Critical Incident Analysis and Risk Assessment and document within the plan of care strategies to prevent or mitigate the likelihood of similar future critical incidents.

AUTHORITY NOTE: Promulgated in accordance with R.S. 36:254.

HISTORICAL NOTE: Promulgated by the Department of Health and Hospitals, Bureau of Health Services Financing and Office of Aging and Adult Services, LR 38:

§545. Participant Records

A. Participant records shall be maintained in the support coordinator's office. The support coordinator shall have a current written record for each participant which shall include:

1. identifying data including:
   a. name;
   b. date of birth;
   c. address;
   d. telephone number;
   e. social security number; and
   f. legal status;

2. a copy of the participant's plan of care, as well as any revisions or updates to the plan of care;

3. required assessment(s) and any additional assessments that the agency may have performed, received, or are otherwise privy to;

4. written monthly, interim, and quarterly documentation according to current policy and reports of the services delivered for each participant for each visit and contact;

5. current emergency plan completed according to OAAS guidelines; and

6. current back-up staffing plan completed according to OAAS guidelines.

B. Support coordination agencies shall maintain participant records for a period of five years.

AUTHORITY NOTE: Promulgated in accordance with R.S. 36:254.

HISTORICAL NOTE: Promulgated by the Department of Health and Hospitals, Bureau of Health Services Financing and Office of Aging and Adult Services, LR 38:

§547. Emergency Preparedness

A. Support coordination agencies shall ensure that each participant has an individual plan for dealing with emergencies and disasters and shall assist participants in identifying the specific resources available through family, friends, the neighborhood, and the community. The support coordinator shall assess monthly whether the emergency plan information is current and effective and shall make changes accordingly.

B. A disaster or emergency may be a local, community-wide, regional, or statewide event. Disasters or emergencies may include, but are not limited to:

1. tornados;
2. fires;
3. floods;
4. hurricanes;
5. power outages;
6. chemical spills;
7. biohazards;
8. train wrecks; or
9. declared health crisis.

C. Support Coordination agencies shall update participant evacuation tracking information and submit such to OAAS in the required format and timelines as described in the current OAAS policy for evacuation preparedness.

D. Continuity of Operations. The support coordination agency shall have an emergency preparedness plan to maintain continuity of the agency's operations in preparation for, during, and after an emergency or disaster. The plan shall be designed to manage the consequences of all hazards, declared disasters or other emergencies that disrupt the agency's ability to render services.

E. The support coordination agency shall follow and execute its emergency preparedness plan in the event of the occurrence of a declared disaster or other emergency.

F. The support coordinator shall cooperate with the department and with the local or parish Office of Homeland Security and Emergency Preparedness in the event of an emergency or disaster and shall provide information as requested.

G. The support coordinator shall monitor weather warnings and watches as well as evacuation orders from local and state emergency preparedness officials.

H. All agency employees shall be trained in emergency or disaster preparedness. Training shall include orientation, ongoing training, and participation in planned drills for all personnel.

I. Upon request by the department, the support coordination agency shall submit a copy of its emergency preparedness plan and a written summary attesting to how the plan was followed and executed. The summary shall contain, at a minimum:

1. pertinent plan provisions and how the plan was followed and executed;

2. plan provisions that were not followed;

3. reasons and mitigating circumstances for failure to follow and execute certain plan provisions;

4. contingency arrangements made for those plan provisions not followed; and

5. a list of all injuries and deaths of participants that occurred during execution of the plan, evacuation or temporary relocation including the date, time, causes, and circumstances of the injuries and deaths

AUTHORITY NOTE: Promulgated in accordance with R.S. 36:254.

HISTORICAL NOTE: Promulgated by the Department of Health and Hospitals, Bureau of Health Services Financing and Office of Aging and Adult Services, LR 38:

§549. Continuous Quality Improvement Plan

A. Support coordination agencies shall have a continuous quality improvement plan which governs the agency's internal quality management activities.

B. The CQI plan shall demonstrate a process of continuous cyclical improvement and should utilize the Centers for Medicare and Medicaid Services' "DDRI" operative framework for quality reporting of the Medicaid home and community-based services (HCBS) waivers. "DDRI" is comprised of the following four components which are a common vocabulary linking CMS' expectations and state quality efforts:

1. design;
2. discovery;
3. remediation; and
4. improvement.

C. The CQI plan shall follow an evidence-based approach to quality monitoring with an emphasis on the assurances which the state must make to CMS. The assurances falling under the responsibility of support coordination are those of participant health and welfare, level of care determination, plan of care development, and qualified agency staff.

D. CQI plans shall include, at a minimum:

1. internal quality performance measures and valid sampling techniques to measure all of the OAAS support coordination monitoring review elements;

2. strategies and actions which remediate findings of less than 100 percent compliance and demonstrate ongoing improvement in response to internal and OAAS quality monitoring findings;

3. a process to review, resolve and redesign in order to address all systemic issues identified;

4. a process for obtaining input annually from the participant/guardian/authorized representatives and possibly family members to include, but not be limited to:

a. satisfaction surveys done by mail or phone; or

b. other processes for receiving input regarding the quality of services received;

5. a process for identifying on a quarterly basis the risk factors that affects or may affect the health or welfare of individuals being supported which includes, but is not limited to:

a. review and resolution of complaints;

b. review and resolution of incidents; and

c. the respective Protective Services' agency's investigations of abuse, neglect and exploitation;

6. a process to review and resolve individual participant issues that are identified; and

7. a process to actively engage all agency staff in the CQI Plan.

AUTHORITY NOTE: Promulgated in accordance with R.S. 36:254.

HISTORICAL NOTE: Promulgated by the Department of Health and Hospitals, Bureau of Health Services Financing and Office of Aging and Adult Services, LR 38:

§551. Support Coordination Monitoring

A. Support coordination agencies shall offer full cooperation with the OAAS during the monitoring process. Responsibilities of the Support Coordination agency in the monitoring process include, but are not limited to:

1. providing policy and procedure manuals, personnel records, case records, and other documentation;

2. providing space for documentation review and support coordinator interviews;

3. coordinating agency support coordinator interviews; and

4. assisting with scheduling participant interviews.

B. There shall be an annual OAAS support coordination monitoring of each support coordination agency and the results of this monitoring will be reported to the support coordination agency along with required follow-up actions and timelines. All individual findings of noncompliance must be addressed, resolved and reported to OAAS within specified timelines. All recurrent problems shall be addressed through systemic changes resulting in improvement. Agencies which do not perform all of the required follow-up actions according to the timelines will be subject to sanctions of increasing severity as described in §525.C.1-5.

AUTHORITY NOTE: Promulgated in accordance with R.S. 36:254.

HISTORICAL NOTE: Promulgated by the Department of Health and Hospitals, Bureau of Health Services Financing and Office of Aging and Adult Services, LR 38:

Implementation of the provisions of this Rule may be contingent upon the approval of the U.S. Department of Health and Human Services, Centers for Medicare and Medicaid Services (CMS), if it is determined that submission to CMS for review and approval is required.

Interested persons may submit written comments to J. Ruth Kennedy, Bureau of Health Services Financing, P.O. Box 91030, Baton Rouge, LA 70821-9030. She is responsible for responding to inquiries regarding this Emergency Rule. A copy of this Emergency Rule is available for review by interested parties at parish Medicaid offices.

Bruce D. Greenstein
Secretary

1208#096

DECLARATION OF EMERGENCY

Department of Health and Hospitals
Bureau of Health Services Financing

Inpatient Hospital Services
Distinct Part Psychiatric Units
Reimbursement Methodology
(LAC 50:V.915 and 959)

The Department of Health and Hospitals, Bureau of Health Services Financing amends LAC 50:V.915 and §959 in the Medical Assistance Program as authorized by R.S. 36:254 and pursuant to Title XIX of the Social Security Act. This Emergency Rule is promulgated in accordance with the provisions of the Administrative Procedure Act, R.S. 49:953(B)(1) et seq., and shall be in effect for the maximum period allowed under the Act or until adoption of the final Rule, whichever occurs first.

In compliance with Act 18 of the 2007 Regular Session of the Louisiana Legislature, the Department of Health and

Hospitals, Office of the Secretary, Bureau of Health Services Financing amended the provisions governing inpatient psychiatric services to allow acute care hospitals that enter into an agreement with the Office of Mental Health [currently the Office of Behavioral Health] to expand their distinct part psychiatric unit beds and receive Medicaid reimbursement for the patients who occupy the additional beds (*Louisiana Register*, Volume 34, Number 9).

The department promulgated an Emergency Rule which amended the provisions governing the reimbursement methodology for inpatient psychiatric hospital services rendered by distinct part psychiatric units of acute care hospitals that enter into a cooperative endeavor agreement (CEA) with the Department of Health and Hospitals, Office of Behavioral Health (*Louisiana Register*, Volume 38, Number 2). The department promulgated an Emergency Rule which amended the February 10, 2012 Emergency Rule to clarify the provisions governing qualifying hospitals (*Louisiana Register*, Volume 38, Number 5). The department now proposes to amend the May 20, 2012 Emergency Rule to revise the formatting of these provisions to ensure that they are promulgated in a clear and concise format. This action is being taken to avoid a budget deficit in the medical assistance programs.

Effective August 20, 2012, the Department of Health and Hospitals, Bureau of Health Services Financing amends the provisions of the May 20, 2012 Emergency Rule governing the reimbursement methodology for inpatient psychiatric hospital services rendered by distinct part psychiatric units.

Title 50

PUBLIC HEALTH—MEDICAL ASSISTANCE

Part V. Medical Assistance Program—Hospital Services

Subpart 1. Inpatient Hospitals

Chapter 9. Non-Rural, Non-State Hospitals

Subchapter A. General Provisions

§915. Distinct Part Psychiatric Units

A. …

1.a. - b. Repealed.

B. Effective for dates of service on or after February 10, 2012, a Medicaid enrolled non-state acute care hospital that enters into a Cooperative Endeavor Agreement (CEA) with the Department of Health and Hospitals, Office of Behavioral Health to provide inpatient psychiatric hospital services to Medicaid and uninsured patients, and which also assumes the operation and management of a state-owned and formerly state-operated hospital distinct part psychiatric unit, may make a one-time increase in its number of beds with a one-time opening of a new distinct part psychiatric unit.

1. This expansion or opening of a new unit will not be recognized, for Medicare purposes, until the beginning of the next cost reporting period. At the next cost reporting period, the hospital must meet the Medicare Prospective Payment System (PPS) exemption criteria and enroll as a Medicare PPS excluded distinct part psychiatric unit.

2. At the time of any expansion or opening of a new distinct part psychiatric unit, the provider must provide a written attestation that they meet all Medicare PPS rate exemption criteria.

3. Admissions to this expanded or new distinct part psychiatric unit may not be based on payer source.

C. Changes in the Status of Hospital Units. The status of each hospital unit is determined at the beginning of each cost reporting period and is effective for the entire cost reporting period. Any changes in the status of a unit are made only at the start of a cost reporting period.

1. Repealed.

AUTHORITY NOTE: Promulgated in accordance with R.S. 36:254 and Title XIX of the Social Security Act.

HISTORICAL NOTE: Promulgated by the Department of Health and Hospitals, Office of the Secretary, Bureau of Health Services Financing, LR 20:49 (January 1994), amended LR 34:1913 (September 2008), amended by the Department of Health of Health and Hospitals, Bureau of Health Services Financing, LR 38:

Subchapter B. Reimbursement Methodology

§959. Inpatient Psychiatric Hospital Services

A. - K.2.b. …

L. Effective for dates of service on or after February 10, 2012, a Medicaid enrolled non-state acute care hospital that enters into a Cooperative Endeavor Agreement (CEA) with the Department of Health and Hospitals, Office of Behavioral Health to provide inpatient psychiatric hospital services to Medicaid and uninsured patients, and which also assumes the operation and management of formerly state-owned and operated psychiatric hospitals/visits, shall be paid a per diem rate of $581.11 per day.

AUTHORITY NOTE: Promulgated in accordance with R.S. 36:254 and Title XIX of the Social Security Act.

HISTORICAL NOTE: Promulgated by the Department of Health and Hospitals, Office of the Secretary, Bureau of Health Services Financing, LR 34:876 (May 2008), amended by the Department of Health and Hospitals, Bureau of Health Services Financing, LR 35:1895 (September 2009), repromulgated LR 35:2183 (October 2009), amended LR 36:1554 (July 2010), LR 36:2562 (November, 2010), LR 37:2162 (July 2011), LR 38:

Implementation of the provisions of this Rule may be contingent upon the approval of the U.S. Department of Health and Human Services, Centers for Medicare and Medicaid Services (CMS), if it is determined that submission to CMS for review and approval is required.

Interested persons may submit written comments to J. Ruth Kennedy, Bureau of Health Services Financing, P.O. Box 91030, Baton Rouge, LA 70821-9030. She is responsible for responding to all inquiries regarding this Emergency Rule. A copy of this Emergency Rule is available for review by interested parties at parish Medicaid offices.

Bruce D. Greenstein
Secretary

1208#097

DECLARATION OF EMERGENCY

Department of Health and Hospitals
Bureau of Health Services Financing

Inpatient Hospital Services
Free-Standing Psychiatric Hospitals
Low Income and Needy Care Collaboration
(LAC 50:V.959)

The Department of Health and Hospitals, Bureau of Health Services Financing amends LAC 50:V.959 in the Medical Assistance Program as authorized by R.S. 36:254 and pursuant to Title XIX of the Social Security Act. This Emergency Rule is promulgated in accordance with the provisions of the Administrative Procedure Act, R.S.

49:953(B)(1) et seq., and shall be in effect for the maximum period allowed under the Act or until adoption of the final Rule, whichever occurs first.

Due to a continuing budgetary shortfall in state fiscal year 2011, the Department of Health and Hospitals, Bureau of Health Services Financing amended the provisions governing the reimbursement methodology for inpatient hospital services to reduce the reimbursement rates paid to non-rural, non-state hospitals, including free-standing psychiatric hospitals (*Louisiana Register*, Volume 37, Number 7).

The department promulgated an Emergency Rule which amended the provisions of the July 2011 final Rule in order to provide for a supplemental Medicaid payment to non-rural, non-state free-standing psychiatric hospitals that enter into an agreement with a state or local governmental entity for the purpose of providing healthcare services to low income and needy patients (*Louisiana Register*, Volume 37, Number 12). This Emergency Rule is being promulgated to continue the provisions of the January 1, 2012 Emergency Rule. This action is being taken to secure new federal funding and to promote the public health and welfare of Medicaid recipients by ensuring sufficient provider participation in the Hospital Services Program.

Effective August 30, 2012, the Department of Health and Hospitals, Bureau of Health Services Financing amends the provisions governing the reimbursement methodology for inpatient hospital services rendered by non-rural, non-state free-standing psychiatric hospitals.

Title 50

PUBLIC HEALTH—MEDICAL ASSISTANCE

Part V. Hospital Services

Subpart 1. Inpatient Hospitals

Chapter 9. Non-Rural, Non-State Hospitals

Subchapter B. Reimbursement Methodology

§959. Inpatient Psychiatric Hospital Services

A. - J. …

K. Low Income and Needy Care Collaboration. Effective for dates of service on or after January 1, 2012, quarterly supplemental payments shall be issued to qualifying non-rural, non-state free-standing psychiatric hospitals for inpatient services rendered during the quarter. Maximum aggregate payments to all qualifying hospitals in this group shall not exceed the available upper payment limit per state fiscal year.

1. Qualifying Criteria. In order to qualify for the supplemental payment, the non-state free-standing psychiatric hospital must be affiliated with a state or local governmental entity through a Low Income and Needy Care Collaboration Agreement.

a. A non-state free-standing psychiatric hospital is defined as a free-standing psychiatric hospital which is owned or operated by a private entity.

b. A Low Income and Needy Care Collaboration Agreement is defined as an agreement between a hospital and a state or local governmental entity to collaborate for the purposes of providing healthcare services to low income and needy patients.

2. Each qualifying hospital shall receive quarterly supplemental payments for the inpatient services rendered during the quarter. Quarterly payment distribution shall be limited to one-fourth of the lesser of:

a. the difference between each qualifying hospital's inpatient Medicaid billed charges and Medicaid payments the hospital receives for covered inpatient psychiatric services provided to Medicaid recipients. Medicaid billed charges and payments will be based on a 12 consecutive month period for claims data selected by the department; or

b. for hospitals participating in the Medicaid Disproportionate Share Hospital (DSH) Program, the difference between the hospital's specific DSH limit and the hospital's DSH payments for the applicable payment period.

AUTHORITY NOTE: Promulgated in accordance with R.S. 36:254 and Title XIX of the Social Security Act.

HISTORICAL NOTE: Promulgated by the Department of Health and Hospitals, Office of the Secretary, Bureau of Health Services Financing, LR 34:876 (May 2008), amended by the Department of Health and Hospitals, Bureau of Health Services Financing, LR 35:1895 (September 2009), amended LR 36:1554 (July 2010), LR 36:2562 (November, 2010), LR 37:2162 (July 2011), LR 38:

Implementation of the provisions of this Rule may be contingent upon the approval of the U.S. Department of Health and Human Services, Center for Medicare and Medicaid Services (CMS), if it is determined that submission to CMS for review and approval is required.

Interested persons may submit written comments to J. Ruth Kennedy, Bureau of Health Services Financing, P.O. Box 91030, Baton Rouge, LA 70821-9030. She is responsible for responding to all inquiries regarding this Emergency Rule. A copy of this Emergency Rule is available for review by interested parties at parish Medicaid offices.

Bruce D. Greenstein
Secretary

1208#107

DECLARATION OF EMERGENCY

Department of Health and Hospitals
Bureau of Health Services Financing

Inpatient Hospital Services—Neonatal and Pediatric Intensive Care Units and Outlier Payment Methodologies (LAC 50:V.953-954 and 967)

The Department of Health and Hospitals, Bureau of Health Services Financing amends LAC 50:V.953-954 and §967 in the Medical Assistance Program as authorized by R.S. 36:254 and pursuant to Title XIX of the Social Security Act. This Emergency Rule is promulgated in accordance with the provisions of the Administrative Procedure Act, R.S. 49:953(B)(1) et seq., and shall be in effect for the maximum period allowed under the Act or until adoption of the final Rule, whichever occurs first.

The Department of Health and Hospitals, Bureau of Health Services Financing amended the provisions governing the reimbursement methodology for inpatient hospital services rendered by non-rural, non-state hospitals to align the prospective per diem rates more closely with reported costs, including the neonatal intensive care unit (NICU) and pediatric intensive care unit (PICU) rates (*Louisiana Register*, Volume 35, Number 9).

The Department of Health and Hospitals, Bureau of Health Services Financing repromulgated all of the provisions governing outlier payments for inpatient hospital

services in a codified format for inclusion in the *Louisiana Administrative Code* (*Louisiana Register,* Volume 36, Number 3).

The department promulgated an Emergency Rule which amended the provisions governing the reimbursement methodology for inpatient hospital services to adjust the reimbursement rates paid for NICU and PICU services rendered by non-rural, non-state hospitals and to revise the outlier payment methodology (*Louisiana Register,* Volume 37, Number 3). The department now proposes to amend the March 1, 2011 Emergency Rule governing the reimbursement methodology for inpatient hospital services to revise the formatting of these provisions in order to ensure that the provisions are promulgated in a clear and concise manner. This action is being taken to promote the health and welfare of Medicaid recipients by maintaining access to neonatal and pediatric intensive care unit services and encouraging the continued participation of hospitals in the Medicaid Program.

Effective August 20, 2012, the Department of Health and Hospitals, Bureau of Health Services Financing amends the provisions of the March 1, 2011 Emergency Rule governing the reimbursement methodology for inpatient hospitals.

Title 50

PUBLIC HEALTH—MEDICAL ASSISTANCE

Part V. Hospital Services

Chapter 9. Non-Rural, Non-State Hospitals

Subchapter B. Reimbursement Methodology

§953. Acute Care Hospitals

A. - G.…

H. Neonatal Intensive Care Units (NICU)

1. - 2. …

3. Effective for dates of service on or after March 1, 2011, the per diem rates for Medicaid inpatient services rendered by NICU Level III and NICU Level III regional units, recognized by the department as such on December 31, 2010, shall be adjusted to include an increase that varies based on the following five tiers:

a. Tier 1. If the qualifying hospital's average percentage exceeds 10 percent, the additional per diem increase shall be $601.98;

b. Tier 2. If the qualifying hospital's average percentage is less than or equal to 10 percent, but exceeds 5 percent, the additional per diem increase shall be $624.66;

c. Tier 3. If the qualifying hospital's average percentage is less than or equal to 5 percent, but exceeds 1.5 percent, the additional per diem increase shall be $419.83;

d. Tier 4. If the qualifying hospital's average percentage is less than or equal to 1.5 percent, but greater than 0 percent, and the hospital received greater than .25 percent of the outlier payments for dates of service in state fiscal year (SFY) 2008 and SFY 2009 and calendar year 2010, the additional per diem increase shall be $263.33; or

e. Tier 5. If the qualifying hospital received less than .25 percent, but greater than 0 percent of the outlier payments for dates of service in SFY 2008 and SFY 2009 and calendar year 2010, the additional per diem increase shall be $35.

4. A qualifying hospital's placement into a tier will be determined by the average of its percentage of paid NICU Medicaid days for SFY 2010 dates of service to the total of all qualifying hospitals' paid NICU days for the same time period, and its percentage of NICU patient outlier payments made as of December 31, 2010 for dates of service in SFY 2008 and SFY 2009 and calendar year 2010 to the total NICU outlier payments made to all qualifying hospitals for these same time periods.

a. This average shall be weighted to provide that each hospital's percentage of paid NICU days will comprise 25 percent of this average, while the percentage of outlier payments will comprise 75 percent. In order to qualify for Tiers 1 through 4, a hospital must have received at least .25 percent of outlier payments in SFY 2008, SFY 2009, and calendar year 2010.

b. SFY 2010 is used as the base period to determine the allocation of NICU and PICU outlier payments for hospitals having both NICU and PICU units.

c. If the daily paid outlier amount per paid NICU day for any hospital is greater than the mean plus one standard deviation of the same calculation for all NICU Level III and NICU Level III regional hospitals, then the basis for calculating the hospital's percentage of NICU patient outlier payments shall be to substitute a payment amount equal to the highest daily paid outlier amount of any hospital not exceeding this limit, multiplied by the exceeding hospital's paid NICU days for SFY 2010, to take the place of the hospital's actual paid outlier amount.

NOTE: Children's specialty hospitals are not eligible for the per diem adjustments established in §953.H.3.

5. The department shall evaluate all rates and tiers two years after implementation.

I. Pediatric Intensive Care Unit (PICU)

1. - 2. …

3. Effective for dates of service on or after March 1, 2011, the per diem rates for Medicaid inpatient services rendered by PICU Level I and PICU Level II units, recognized by the department as such on December 31, 2010, shall be adjusted to include an increase that varies based on the following four tiers:

a. Tier 1. If the qualifying hospital's average percentage exceeds 20 percent, the additional per diem increase shall be $418.34;

b. Tier 2. If the qualifying hospital's average percentage is less than or equal to 20 percent, but exceeds 10 percent, the additional per diem increase shall be $278.63;

c. Tier 3. If the qualifying hospital's average percentage is less than or equal to 10 percent, but exceeds 0 percent and the hospital received greater than .25 percent of the outlier payments for dates of service in SFY 2008 and SFY 2009 and calendar year 2010, the additional per diem increase shall be $178.27; or

d. Tier 4. If the qualifying hospital received less than .25 percent, but greater than 0 percent of the outlier payments for dates of service in SFY 2008, SFY 2009 and calendar year 2010, the additional per diem increase shall be $35.

4. A qualifying hospital's placement into a tier will be determined by the average of its percentage of paid PICU Medicaid days for SFY 2010 dates of service to the total of all qualifying hospitals' paid PICU days for the same time period, and its percentage of PICU patient outlier payments made as of December 31, 2010 for dates of service in SFY 2008 and SFY 2009 and calendar year 2010 to the total PICU outlier payments made to all qualifying hospitals for these same time periods.

a. This average shall be weighted to provide that each hospital's percentage of paid PICU days will comprise 25 percent of this average, while the percentage of outlier payments will comprise 75 percent. In order to qualify for Tiers 1 through 3, a hospital must have received at least .25 percent of outlier payments in SFY 2008, SFY 2009, and calendar year 2010.

b. SFY 2010 is used as the base period to determine the allocation of NICU and PICU outlier payments for hospitals having both NICU and PICU units.

c. If the daily paid outlier amount per paid PICU day for any hospital is greater than the mean plus one standard deviation of the same calculation for all PICU Level I and PICU Level II hospitals, then the basis for calculating the hospital's percentage of PICU patient outlier payments shall be to substitute a payment amount equal to the highest daily paid outlier amount of any hospital not exceeding this limit, multiplied by the exceeding hospital's paid PICU days for SFY 2010, to take the place of the hospital's actual paid outlier amount.

NOTE: Children's specialty hospitals are not eligible for the per diem adjustments established in §953.I.3.

5. The department shall evaluate all rates and tiers two years after implementation.

J. - O.1. …

AUTHORITY NOTE: Promulgated in accordance with R.S. 36:254 and Title XIX of the Social Security Act.

HISTORICAL NOTE: Promulgated by the Department of Health and Hospitals, Office of the Secretary, Bureau of Health Services Financing, LR 34:876 (May 2008), amended LR 34:877 (May 2008), amended by the Department of Health and Hospitals, Bureau of Health Services Financing, LR 35:1895 (September 2009), amended LR 36:1552 (July 2010), LR 36:2561 (November 2010), LR 38:

§954. Outlier Payments

A. - B. …

C. To qualify as a payable outlier claim, a deadline of not later than six months subsequent to the date that the final claim is paid shall be established for receipt of the written request for outlier payments.

1. Effective March 1, 2011, in addition to the 6 month timely filing deadline, outlier claims for dates of service on or before February 28, 2011 must be received by the department on or before May 31, 2011 in order to qualify for payment. Claims for this time period received by the department after May 31, 2011 shall not qualify for payment.

D. Effective for dates of service on or after March 1, 2011, a catastrophic outlier pool shall be established with annual payments limited to $10,000,000. In order to qualify for payments from this pool, the following conditions must be met:

1. the claims must be for cases for:

a. children less than six years of age who received inpatient services in a disproportionate share hospital setting; or

b. infants less than one year of age who receive inpatient services in any acute care hospital setting; and

2. the costs of the case must exceed $150,000.

a. The hospital specific cost to charge ratio utilized to calculate the claim costs shall be calculated using the Medicaid NICU or PICU costs and charge data from the most current cost report.

E. The initial outlier pool will cover eligible claims with admission dates from the period beginning March 1, 2011 through June 30, 2011.

1. Payment for the initial partial year pool will be $3,333,333 and shall be the costs of each hospital's qualifying claims net of claim payments divided by the sum of all qualifying claims costs in excess of payments, multiplied by $3,333,333.

2. Cases with admission dates on or before February 28, 2011 that continue beyond the March 1, 2011 effective date, and that exceed the $150,000 cost threshold, shall be eligible for payment in the initial catastrophic outlier pool.

3. Only the costs of the cases applicable to dates of service on or after March 1, 2011 shall be allowable for determination of payment from the pool.

F. Beginning with SFY 2012, the outlier pool will cover eligible claims with admission dates during the state fiscal year (July 1 through June 30) and shall not exceed $10,000,000 annually. Payment shall be the costs of each hospital's eligible claims less the prospective payment, divided by the sum of all eligible claims costs in excess of payments, multiplied by $10,000,000.

G. The claim must be submitted no later than six months subsequent to the date that the final claim is paid and no later than September 15 of each year.

H. Qualifying cases for which payments are not finalized by September 1 shall be eligible for inclusion for payment in the subsequent state fiscal year outlier pool.

I. Outliers are not payable for:

1. transplant procedures; or

2. services provided to patients with Medicaid coverage that is secondary to other payer sources.

AUTHORITY NOTE: Promulgated in accordance with R.S. 36:254 and Title XIX of the Social Security Act.

HISTORICAL NOTE: Promulgated by the Department of Health and Hospitals, Bureau of Health Services Financing, LR 36:519 (March 2010), amended LR 38:

§967. Children's Specialty Hospitals

A. - H. …

I. Children's specialty hospitals are not eligible for the per diem adjustments established in §953.H.3 and §953.I.3.

AUTHORITY NOTE: Promulgated in accordance with R.S. 36:254 and Title XIX of the Social Security Act.

HISTORICAL NOTE: Promulgated by the Department of Health and Hospitals, Bureau of Health Services Financing, LR 36:2562 (November 2010), amended LR 38:

Interested persons may submit written comments to J. Ruth Kennedy, Bureau of Health Services Financing, P.O. Box 91030, Baton Rouge, LA 70821-9030. She is responsible for responding to inquiries regarding this Emergency Rule. A copy of this Emergency Rule is available for review by interested parties at parish Medicaid offices.

Bruce D. Greenstein
Secretary

1208#098

DECLARATION OF EMERGENCY

Department of Health and Hospitals
Bureau of Health Services Financing

Inpatient Hospital Services
Non-Rural, Non-State Hospitals
Low Income and Needy Care Collaboration
(LAC 50:V.953)

The Department of Health and Hospitals, Bureau of Health Services Financing amends LAC 50:V.953 in the Medical Assistance Program as authorized by R.S. 36:254 and pursuant to Title XIX of the Social Security Act. This Emergency Rule is promulgated in accordance with the provisions of the Administrative Procedure Act, R.S. 49:953.B(1) et seq., and shall be in effect for the maximum period allowed under the Act or until adoption of the final Rule, whichever occurs first.

The Department of Health and Hospitals, Bureau of Health Services Financing amended the provisions governing the reimbursement methodology for inpatient hospital services to reduce the reimbursement rates and to provide for a supplemental Medicaid payment to hospitals that enter into an agreement with a state or local governmental entity for the purpose of providing healthcare services to low income and needy patients (*Louisiana Register*, Volume 36, Number 11).

The department promulgated an Emergency Rule which amended the provisions governing the reimbursement methodology for inpatient hospital services to revise the participation requirements for the Low Income and Needy Care Collaboration (*Louisiana Register*, Volume 37, Number 1). This Emergency Rule is being promulgated to continue the provisions of the January 1, 2011 Emergency Rule. This action is being taken to secure new federal funding and to promote the public health and welfare of Medicaid recipients by ensuring sufficient provider participation in the Hospital Services Program.

Effective August 28, 2012, the Department of Health and Hospitals, Bureau of Health Services Financing amends the provisions governing the reimbursement methodology for inpatient hospital services.

Title 50
PUBLIC HEALTH-MEDICAL ASSISTANCE
Part V. Hospital Services
Subpart 1. Inpatient Hospitals
Chapter 9. Non-Rural, Non-State Hospitals
Subchapter B. Reimbursement Methodology
§953. Acute Care Hospitals

A. - N.2.b. …

3. Effective for dates of service on or after January 1, 2011, all parties that participate in supplemental payments under this Section, either as a qualifying hospital by receipt of supplemental payments or as a state or local governmental entity funding supplemental payments, must meet the following conditions during the period of their participation:

a. Each participant must comply with the prospective conditions of participation in the Louisiana Private Hospital Upper Payment Limit Supplemental Reimbursement Program.

b. A participating hospital may not make a cash or in-kind transfer to their affiliated governmental entity that has a direct or indirect relationship to Medicaid payments and would violate federal law.

c. A participating governmental entity may not condition the amount it funds the Medicaid Program on a specified or required minimum amount of low income and needy care.

d. A participating governmental entity may not assign any of its contractual or statutory obligations to an affiliated hospital.

e. A participating governmental entity may not recoup funds from an affiliated hospital that has not adequately performed under the Low Income and Needy Care Collaboration Agreement.

f. A participating hospital may not return any of the supplemental payments it receives under this Section to the governmental entity that provides the non-federal share of the supplemental payments.

g. A participating governmental entity may not receive any portion of the supplemental payments made to a participating hospital under this Section.

4. Each participant must certify that it complies with the requirements of §953.N.3 by executing the appropriate certification form designated by the department for this purpose. The completed form must be submitted to the Department of Health and Hospitals, Bureau of Health Services Financing.

5. Each qualifying hospital must submit a copy of its Low Income and Needy Care Collaboration Agreement to the department.

6. The supplemental payments authorized in this Section shall not be considered as interim Medicaid inpatient payments in the determination of cost settlement amounts for inpatient hospital services rendered by children's specialty hospitals.

O. - Q.1....

AUTHORITY NOTE: Promulgated in accordance with R.S. 36:254 and Title XIX of the Social Security Act.

HISTORICAL NOTE: Promulgated by the Department of Health and Hospitals, Office of the Secretary, Bureau of Health Services Financing, LR 34:876 (May 2008), amended LR 34:877 (May 2008), amended by the Department of Health and Hospitals, Bureau of Health Services Financing, LR 35:1895 (September 2009), amended LR 36:1552 (July 2010), LR 36:2561 (November 2010), LR 38:

Implementation of the provisions of this Rule may be contingent upon the approval of the U.S. Department of Health and Human Services, Center for Medicare and Medicaid Services (CMS), if it is determined that submission to CMS for review and approval is required.

Interested persons may submit written comments to J. Ruth Kennedy, Bureau of Health Services Financing, P.O. Box 91030, Baton Rouge, LA 70821-9030. She is responsible for responding to all inquiries regarding this Emergency Rule. A copy of this Emergency Rule is available for review by interested parties at parish Medicaid offices.

Bruce D. Greenstein
Secretary

1208#108

DECLARATION OF EMERGENCY

Department of Health and Hospitals
Bureau of Health Services Financing

Inpatient Hospital Services
Non-Rural, Non-State Public Hospitals
Reimbursement Methodology
(LAC 50:V.953 and 963)

The Department of Health and Hospitals, Bureau of Health Services Financing amends LAC 50:V.953 and 963 in the Medical Assistance Program as authorized by R.S. 36:254 and pursuant to Title XIX of the Social Security Act. This Emergency Rule is promulgated in accordance with the provisions of the Administrative Procedure Act, R.S. 49:953(B)(1) et seq., and shall be in effect for the maximum period allowed under the Act or until adoption of the final Rule, whichever occurs first.

As a result of a budgetary shortfall in state fiscal year (SFY) 2010, the Department of Health and Hospitals, Bureau of Health Services Financing amended the provisions governing the reimbursement methodology for inpatient hospital services to reduce the reimbursement rates for inpatient hospital services rendered by non-rural, non-state hospitals (*Louisiana Register,* Volume 36, Number 11). The November 20, 2010 Rule also amended the reimbursement methodology for inpatient hospital services to establish a Medicaid upper payment limit financing mechanism to provide supplemental payments to hospitals for providing healthcare services to low income and needy patients. The department promulgated an Emergency Rule which amended the provisions governing inpatient hospital services to revise the reimbursement methodology for non-rural, non-state public hospitals (*Louisiana Register*, Volume 37, Number 5).

The department now proposes to amend the provisions of the May 15, 2011 Emergency Rule in order to repromulgate these provisions in LAC 50:V.963 to ensure that the provisions are promulgated in a clear and concise manner in the *Louisiana Administrative Code*. This action is being taken to promote the health and welfare of Medicaid recipients by ensuring sufficient provider participation in the hospital services program and to ensure recipient access to services.

Effective August 1, 2012, the Department of Health and Hospitals, Bureau of Health Services Financing amends the provisions of the May 15, 2011 Emergency Rule governing the reimbursement methodology for inpatient hospital services rendered by non-rural, non-state public hospitals.

Title 50
PUBLIC HEALTH—MEDICAL ASSISTANCE
Part V. Hospital Services
Subpart 1. Inpatient Hospital Services
Chapter 9. Non-Rural, Non-State Hospitals
Subchapter B. Reimbursement Methodology
§953. Acute Care Hospitals

A. - Q. …

R. Repealed.

AUTHORITY NOTE: Promulgated in accordance with R.S. 36:254 and Title XIX of the Social Security Act.

HISTORICAL NOTE: Promulgated by the Department of Health and Hospitals, Office of the Secretary, Bureau of Health Services Financing, LR 34:876 (May 2008), amended LR 34:877 (May 2008), amended by the Department of Health and Hospitals, Bureau of Health Services Financing, LR 35:1895 (September 2009), LR 36:1552 (July 2010), LR 36:2561 (November 2010), LR 38:

§963. Public Hospitals

A. Effective for dates of service on or after May 15, 2011, non-rural, non-state public hospitals shall be reimbursed up to the Medicare inpatient upper payment limits as determined in accordance with 42 CFR §447.272.

AUTHORITY NOTE: Promulgated in accordance with R.S. 36:254 and Title XIX of the Social Security Act.

HISTORICAL NOTE: Promulgated by the Department of Health and Hospitals, Bureau of Health Services Financing, LR 38:

Implementation of the provisions of this Rule may be contingent upon the approval of the U.S. Department of Health and Human Services, Centers for Medicare and Medicaid Services (CMS), if it is determined that submission to CMS for review and approval is required.

Interested persons may submit written comments to J. Ruth Kennedy, Bureau of Health Services Financing, P.O. Box 91030, Baton Rouge, LA 70821-9030. She is responsible for responding to inquiries regarding this Emergency Rule. A copy of this Emergency Rule is available for review by interested parties at parish Medicaid offices.

Bruce D. Greenstein
Secretary

1208#021

DECLARATION OF EMERGENCY

Department of Health and Hospitals
Bureau of Health Services Financing

Inpatient Hospital Services
Non-Rural, Non-State Hospitals
Reimbursement Rate Reduction
(LAC 50:V.953, 955 and 967)

The Department of Health and Hospitals, Bureau of Health Services Financing amends LAC 50:V. 953, 955, and 967 in the Medical Assistance Program as authorized by R.S. 36:254 and pursuant to Title XIX of the Social Security Act and as directed by Act 13 of the 2012 Regular Session of the Louisiana Legislature which states: "The secretary is directed to utilize various cost containment measures to ensure expenditures remain at the level appropriated in this Schedule, including but not limited to precertification, preadmission screening, diversion, fraud control, utilization review and management, prior authorization, service limitations, drug therapy management, disease management, cost sharing, and other measures as permitted under federal law." This Emergency Rule is promulgated in accordance with the provisions of the Administrative Procedure Act, R.S. 49:953(B)(1) et seq., and shall be in effect for the maximum period allowed under the Act or until adoption of the final Rule, whichever occurs first.

As a result of a budgetary shortfall in state fiscal year (SFY) 2011, the Department of Health and Hospitals, Bureau of Health Services Financing amended the provisions governing the reimbursement methodology for inpatient hospital services to reduce the reimbursement rates

for inpatient hospital services rendered by non-rural, non-state hospitals (*Louisiana Register,* Volume 37, Number 7).

In anticipation of a budgetary shortfall in state fiscal year 2013 as a result of the reduction in the state's disaster recovery federal medical assistance percentage (FMAP) rate, the department has determined that it is necessary to amend the provisions governing the reimbursement methodology for inpatient hospital services to reduce the reimbursement rates paid to non-rural, non-state hospitals. This action is being taken to avoid a budget deficit in the medical assistance programs. It is estimated that implementation of this Emergency Rule will reduce expenditures in the Medicaid Program by approximately $11,316,280 for state fiscal year 2012-2013.

Taking the proposed per diem rate reduction into consideration, the department has carefully reviewed the proposed rates and is satisfied that they are consistent with efficiency, economy and quality of care and are sufficient to enlist enough providers so that private (non-state) inpatient hospital services and children's specialty hospital services under the State Plan are available at least to the extent that they are available to the general population in the state.

Effective August 1, 2012, the Department of Health and Hospitals, Bureau of Health Services Financing amends the provisions governing the reimbursement methodology for inpatient hospital services to reduce the reimbursement rates paid to non-rural, non-state hospitals.

Title 50
PUBLIC HEALTH—MEDICAL ASSISTANCE
Part V. Hospital Services
Subpart 1. Inpatient Hospital Services
Chapter 9. Non-Rural, Non-State Hospitals
Subchapter B. Reimbursement Methodology
§953. Acute Care Hospitals

A. - Q.1. …

R. Effective for dates of service on or after August 1, 2012, the inpatient per diem rate paid to acute care hospitals shall be reduced by 3.7 percent of the per diem rate on file as of July 31, 2012.

AUTHORITY NOTE: Promulgated in accordance with R.S. 36:254 and Title XIX of the Social Security Act.

HISTORICAL NOTE: Promulgated by the Department of Health and Hospitals, Office of the Secretary, Bureau of Health Services Financing, LR 34:876 (May 2008), amended LR 34:877 (May 2008), amended by the Department of Health and Hospitals, Bureau of Health Services Financing, LR 35:1895 (September 2009), amended LR 36:1552(July 2010), LR 36:2561 (November, 2010), LR 37:2161 (July 2011), LR 38:

§955. Long Term Hospitals

A. - H. …

I. Effective for dates of service on or after August 1, 2012, the inpatient per diem rate paid to long term hospitals shall be reduced by 3.7 percent of the per diem rate on file as of July 31, 2012.

AUTHORITY NOTE: Promulgated in accordance with R.S. 36:254 and Title XIX of the Social Security Act.

HISTORICAL NOTE: Promulgated by the Department of Health and Hospitals, Office of the Secretary, Bureau of Health Services Financing, LR: 34:876 (May 2008), amended by the Department of Health and Hospitals, Bureau of Health Services Financing, LR 35:1895 (September 2009), amended LR 36:1554 (July 2010), LR 36:2562 (November, 2010), LR 37:2162 (July 2011), LR 38:

§967. Children's Specialty Hospitals

A. - I. …

J. Effective for dates of service on or after August 1, 2012, the per diem rates as calculated per §967.A-C above shall be reduced by 3.7 percent. Final payment shall be the lesser of allowable inpatient acute care and psychiatric costs as determined by the cost report or the Medicaid discharges or days as specified per §967.A-C for the period, multiplied by 85.53 percent of the target rate per discharge or per diem limitation as specified per §967.A-C for the period.

AUTHORITY NOTE: Promulgated in accordance with R.S. 36:254 and Title XIX of the Social Security Act.

HISTORICAL NOTE: Promulgated by the Department of Health and Hospitals, Bureau of Health Services Financing, amended LR 36:2562 (November, 2010), LR 37:2162 (July 2011), LR 38:

Implementation of the provisions of this Rule may be contingent upon the approval of the U.S. Department of Health and Human Services, Centers for Medicare and Medicaid Services (CMS), if it is determined that submission to CMS for review and approval is required.

Interested persons may submit written comments to J. Ruth Kennedy, Bureau of Health Services Financing, P.O. Box 91030, Baton Rouge, LA 70821-9030. She is responsible for responding to inquiries regarding this Emergency Rule. A copy of this Emergency Rule is available for review by interested parties at parish Medicaid offices.

Bruce D. Greenstein
Secretary

1208#019

DECLARATION OF EMERGENCY

Department of Health and Hospitals
Bureau of Health Services Financing

Inpatient Hospital Services
Non-Rural, Non-State Public Hospitals
Supplemental Payments (LAC 50:V.963)

The Department of Health and Hospitals, Bureau of Health Services Financing amends LAC 50:V.963 in the Medical Assistance Program as authorized by R.S. 36:254 and pursuant to Title XIX of the Social Security Act. This Emergency Rule is promulgated in accordance with the provisions of the Administrative Procedure Act, R.S. 49:953(B)(1) et seq., and shall be in effect for the maximum period allowed under the Act or until adoption of the final Rule, whichever occurs first.

As a result of a budgetary shortfall in state fiscal year 2011, the Department of Health and Hospitals, Bureau of Health Services Financing amended the provisions governing the reimbursement methodology for inpatient hospital services to reduce the reimbursement rates for inpatient hospital services rendered by non-rural, non-state hospitals (*Louisiana Register,* Volume 37, Number 7).

The department promulgated an Emergency Rule which amended the provisions governing inpatient hospital services to revise the reimbursement methodology for non-rural, non-state public hospitals (*Louisiana Register*, Volume 37, Number 5). The department now proposes to amend the provisions governing inpatient hospital services to provide

supplemental Medicaid payments to qualifying non-rural, non-state public hospitals. This action is being taken to secure new federal funding and to promote the health and welfare of Medicaid recipients by ensuring sufficient provider participation in the Hospital Program. It is estimated that implementation of this Emergency Rule will have no fiscal impact to the Medicaid Program in state fiscal year 2012-13; however, it is anticipated that this Emergency Rule will increase expenditures for inpatient hospital services by approximately $6,711,876 for state fiscal year 2014 of which approximately $4,396,950 will be paid from federal funds. The required state match of approximately $2,314,926 will be funded through an intergovernmental transfer from qualifying hospitals to the Medicaid Program.

Effective August 1, 2012, the Department of Health and Hospitals, Bureau of Health Services Financing amends the provisions governing the reimbursement methodology for inpatient hospital services rendered by non-rural, non-state public hospitals.

Title 50
PUBLIC HEALTH—MEDICAL ASSISTANCE
Part V. Hospital Services
Subpart 1. Inpatient Hospital Services
Chapter 9. Non-Rural, Non-State Hospitals
Subchapter B. Reimbursement Methodology
§963. Public Hospitals

A. …

B. Effective for dates of service on or after August 1, 2012, quarterly supplemental payments will be issued to qualifying non-rural, non-state public hospitals for inpatient services rendered during the quarter. Payment amounts shall be reimbursed up to the Medicare inpatient upper payment limits as determined in accordance with 42 CFR §447.272.

1. Qualifying criteria. In order to qualify for the quarterly supplemental payment, the non-rural, non-state public acute care hospital must:

a. be designated as a major teaching hospital by the department in state fiscal year 2011 (as of May 15, 2011) and have provided at least 17,000 Medicaid acute care and distinct part psychiatric unit paid days for state fiscal year 2010 dates of service; or

b. effective for dates of service on or after August 1, 2012, be located in a city with a population of over 300,000 as of the 2010 U.S. Census.

C. Each qualifying hospital shall receive quarterly supplemental payments for the inpatient services rendered during the quarter. Quarterly payments shall be the difference between each qualifying hospital's inpatient Medicaid billed charges and Medicaid payments the hospital receives for covered inpatient services provided to Medicaid recipients. Medicaid billed charges and payments will be based on a 12 consecutive month period for claims data selected by the department.

D. With respect to qualifying hospitals that are enrolled in Medicaid after December 1, 2013, projected Medicaid utilization and claims data submitted by the hospital and confirmed by the department as reasonable will be used as the basis for making quarterly supplemental payments during the hospital's start-up period.

1. For purposes of these provisions, the start-up period shall be defined as the first three years of operation.

2. During the start-up period, the department shall verify that supplemental payments do not exceed the inpatient charge differential based on each state fiscal year's claims data and shall recoup amounts determined to have been overpaid.

AUTHORITY NOTE: Promulgated in accordance with R.S. 36:254 and Title XIX of the Social Security Act.

HISTORICAL NOTE: Promulgated by the Department of Health and Hospitals, Bureau of Health Services Financing, LR 38:

Implementation of the provisions of this Rule may be contingent upon the approval of the U.S. Department of Health and Human Services, Centers for Medicare and Medicaid Services (CMS), if it is determined that submission to CMS for review and approval is required.

Interested persons may submit written comments to J. Ruth Kennedy, Bureau of Health Services Financing, P.O. Box 91030, Baton Rouge, LA 70821-9030. She is responsible for responding to inquiries regarding this Emergency Rule. A copy of this Emergency Rule is available for review by interested parties at parish Medicaid offices.

Bruce D. Greenstein
Secretary

1208#020

DECLARATION OF EMERGENCY

Department of Health and Hospitals
Bureau of Health Services Financing

Inpatient Hospital Services—State Hospitals
Reimbursement Rate Reduction (LAC 50:V.551)

The Department of Health and Hospitals, Bureau of Health Services Financing amends LAC 50:V. 551 in the Medical Assistance Program as authorized by R.S. 36:254 and pursuant to Title XIX of the Social Security Act and as directed by Act 13 of the 2012 Regular Session of the Louisiana Legislature which states: "The secretary is directed to utilize various cost containment measures to ensure expenditures remain at the level appropriated in this Schedule, including but not limited to precertification, preadmission screening, diversion, fraud control, utilization review and management, prior authorization, service limitations, drug therapy management, disease management, cost sharing, and other measures as permitted under federal law." This Emergency Rule is promulgated in accordance with the provisions of the Administrative Procedure Act, R.S. 49:953(B)(1) et seq., and shall be in effect for the maximum period allowed under the Act or until adoption of the final Rule, whichever occurs first.

The Department of Health and Hospitals, Bureau of Health Services Financing amended the provisions governing the reimbursement methodology for inpatient hospital services to provide a supplemental Medicaid payment to state-owned acute care hospitals that meet the qualifying criteria, and to adjust the reimbursement paid to

non-qualifying state-owned acute care hospitals (*Louisiana Register*, Volume 38, Number 5).

In anticipation of a budgetary shortfall in state fiscal year 2013 as a result of the reduction in the state's disaster recovery federal medical assistance percentage (FMAP) rate, the department has determined that it is necessary to amend the provisions governing the reimbursement methodology for inpatient hospital services to reduce the reimbursement rates paid to state-owned hospitals. This action is being taken to avoid a budget deficit in the medical assistance programs. It is estimated that implementation of this Emergency Rule will reduce expenditures in the Medicaid Program by approximately $7,685,902 for state fiscal year 2012-2013.

Effective August 1, 2012, the Department of Health and Hospitals, Bureau of Health Services Financing amends the provisions governing the reimbursement methodology for inpatient hospital services to reduce the reimbursement rates paid to state hospitals.

Title 50
PUBLIC HEALTH—MEDICAL ASSISTANCE
Part V. Hospital Services
Subpart 1. Inpatient Hospital Services
Chapter 5. State Hospitals
Subchapter B. Reimbursement Methodology
§551. Acute Care Hospitals

A. - D. …

E. Effective for dates of service on or after August 1, 2012, the inpatient per diem rate paid to state-owned acute care hospitals, excluding Villa Feliciana and inpatient psychiatric services, shall be reduced by 10 percent of the per diem rate on file as of July 31, 2012.

1. The Medicaid payments to state-owned hospitals that qualify for the supplemental payments, excluding Villa Feliciana and inpatient psychiatric services, shall be reimbursed at 90 percent of allowable costs and shall not be subject to per discharge or per diem limits.

2. The Medicaid payments to state-owned hospitals that do not qualify for the supplemental payments shall be reimbursed at 54 percent of allowable costs.

AUTHORITY NOTE: Promulgated in accordance with R.S. 36:254 and Title XIX of the Social Security Act.

HISTORICAL NOTE: Promulgated by the Department of Health and Hospitals, Bureau of Health Services Financing, LR 38:1241 (May 2012), amended LR 38:

Implementation of the provisions of this Rule may be contingent upon the approval of the U.S. Department of Health and Human Services, Centers for Medicare and Medicaid Services (CMS), if it is determined that submission to CMS for review and approval is required.

Interested persons may submit written comments to J. Ruth Kennedy, Bureau of Health Services Financing, P.O. Box 91030, Baton Rouge, LA 70821-9030. She is responsible for responding to inquiries regarding this Emergency Rule. A copy of this Emergency Rule is available for review by interested parties at parish Medicaid offices.

Bruce D. Greenstein
Secretary

1208#022

DECLARATION OF EMERGENCY

Department of Health and Hospitals
Bureau of Health Services Financing

Intermediate Care Facilities for Persons
with Developmental Disabilities
Public Facilities—Reimbursement Methodology
(LAC 50:VII.32965-32969)

The Department of Health and Hospitals, Bureau of Health Services Financing adopts LAC 50:VII.32965-32969 in the Medical Assistance Program as authorized by R.S. 36:254 and pursuant to Title XIX of the Social Security Act. This Emergency Rule is promulgated in accordance with the provisions of the Administrative Procedure Act, R.S. 49:953(B)(1) et seq., and shall be in effect for the maximum period allowed under the Act or until adoption of the final Rule, whichever occurs first.

The Department of Health and Hospitals, Office of the Secretary, Bureau of Health Services Financing amended the provisions governing the reimbursement methodology for state-operated intermediate care facilities for persons with developmental disabilities (ICFs/DD) and established payments using a formula that established per diem rates at the Medicare upper payment limit for these services (*Louisiana Register*, Volume 29, Number 11). Upon submission of the corresponding State Plan amendment to the Centers for Medicare and Medicaid Services for review and approval, the department determined that it was also necessary to establish provisions in the Medicaid State Plan governing the reimbursement methodology for quasi-public ICFs/DD. The department promulgated an Emergency Rule which amended the provisions governing the reimbursement methodology for public ICFs/DD to establish a transitional Medicaid reimbursement rate for community homes that are being privatized (*Louisiana Register,* Volume 36, Number 8). This Emergency Rule also adopted all of the provisions governing reimbursements to state-owned and operated facilities and quasi-public facilities in a codified format for inclusion in the *Louisiana Administrative Code.* The department promulgated an Emergency Rule which amended the August 1, 2010 Emergency Rule to revise the provisions governing transitional rates for public facilities (*Louisiana Register*, Volume 37, Number 6). The department promulgated an Emergency Rule which amended the July 1, 2011 Emergency Rule to clarify the provisions for facilities serving a high concentration of medically fragile individuals (*Louisiana Register*, Volume 37, Number 10). The department now proposes to amend the October 20, 2011 Emergency Rule in order to revise the provisions governing transitional rates for public facilities. This action is being taken to avoid a budget deficit in the medical assistance programs.

Effective August 20, 2012, the Department of Health and Hospitals, Bureau of Health Services Financing amends the provisions of the October 20, 2011 Emergency Rule governing the reimbursement methodology for public intermediate care facilities for persons with developmental disabilities.

Title 50
PUBLIC HEALTH—MEDICAL ASSISTANCE
Part VII. Long Term Care
Subpart 3. Intermediate Care Facilities for Persons with Developmental Disabilities
Chapter 329. Reimbursement Methodology
Subchapter C. Public Facilities
§32965. State-Owned and Operated Facilities

A. Medicaid payments to state-owned and operated intermediate care facilities for persons with developmental disabilities are based on the Medicare formula for determining the routine service cost limits as follows:

1. calculate each state-owned and operated ICF/DD's per diem routine costs in a base year;
2. calculate 112 percent of the average per diem routine costs; and
3. inflate 112 percent of the per diem routine costs using the skilled nursing facility (SNF) market basket index of inflation.

B. Each state-owned and operated facility's capital and ancillary costs will be paid by Medicaid on a "pass-through" basis.

C. The sum of the calculations for routine service costs and the capital and ancillary costs "pass-through" shall be the per diem rate for each state-owned and operated ICF/DD. The base year cost reports to be used for the initial calculations shall be the cost reports for the fiscal year ended June 30, 2002.

AUTHORITY NOTE: Promulgated in accordance with R.S. 36:254 and Title XIX of the Social Security Act.

HISTORICAL NOTE: Promulgated by the Department of Health and Hospitals, Bureau of Health Services Financing, LR 38:

§32967. Quasi-Public Facilities

A. Medicaid payment to quasi-public facilities is a facility-specific prospective rate based on budgeted costs. Providers shall be required to submit a projected budget for the state fiscal year beginning July 1.

B. The payment rates for quasi-public facilities shall be determined as follows:

1. determine each ICF/DD's per diem for the base year beginning July 1;
2. calculate the inflation factor using an average CPI index applied to each facility's per diem for the base year to determine the inflated per diem;
3. calculate the median per diem for the facilities' base year;
4. calculate the facility's routine cost per diem for the SFY beginning July 1 by using the lowest of the budgeted, inflated or median per diem rates plus any additional allowances; and
5. calculate the final approved per diem rate for each facility by adding routine costs plus any "pass through" amounts for ancillary services, provider fees, and grant expenses.

C. Providers may request a final rate adjustment subject to submission of supportive documentation and approval by the department.

AUTHORITY NOTE: Promulgated in accordance with R.S. 36:254 and Title XIX of the Social Security Act.

HISTORICAL NOTE: Promulgated by the Department of Health and Hospitals, Bureau of Health Services Financing, LR 38:

§32969. Transitional Rates for Public Facilities

A. Effective October 1, 2012, the department shall establish a transitional Medicaid reimbursement rate of $302.08 per day per individual for a public ICF/DD facility over 50 beds that is transitioning to a private provider, as long as the provider meets the following criteria:

1. shall have a fully executed Cooperative Endeavor Agreement (CEA) with the Office for Citizens with Developmental Disabilities (OCDD) for the private operation of the facility;
2. shall have a high concentration of medically fragile individuals being served, as determined by the department;
   a. for purposes of these provisions, a medically fragile individual shall refer to an individual who has a medically complex condition characterized by multiple, significant medical problems that require extended care.
3. incurs or will incur higher existing costs not currently captured in the private ICF/DD rate methodology; and
4. shall agree to downsizing and implement a pre-approved OCDD plan.
   a. Any ICF/DD home that is a Cooperative Endeavor Agreement (CEA) to which individuals transition to satisfy downsizing requirements, shall not exceed 6-8 beds.

B. The transitional Medicaid reimbursement rate shall only be for the period of transition, which is defined as the term of the CEA or a period of three years, whichever is shorter.

C. The transitional Medicaid reimbursement rate is all-inclusive and incorporates the following cost components:

1. direct care staffing;
2. medical/nursing staff, up to 23 hours per day;
3. medical supplies;
4. transportation;
5. administrative; and
6. the provider fee.

D. If the community home meets the criteria in §32969.C and the individuals served require that the community home has a licensed nurse at the facility 24 hours per day, seven days per week, the community home may apply for a supplement to the transitional rate. The supplement to the rate shall not exceed $25.33 per day per individual.

E. The total transitional Medicaid reimbursement rate, including the supplement, shall not exceed $327.41 per day per individual.

F. The transitional rate and supplement shall not be subject to the following:

1. inflationary factors or adjustments;
2. rebasing;
3. budgetary reductions; or
4. other rate adjustments.

AUTHORITY NOTE: Promulgated in accordance with R.S. 36:254 and Title XIX of the Social Security Act.

HISTORICAL NOTE: Promulgated by the Department of Health and Hospitals, Bureau of Health Services Financing, LR 38:

Interested persons may submit written comments to J. Ruth Kennedy, Bureau of Health Services Financing, P.O. Box 91030, Baton Rouge, LA 70821-9030. She is responsible for responding to inquiries regarding this

Emergency Rule. A copy of this Emergency Rule is available for review by interested parties at parish Medicaid offices.

Bruce D. Greenstein
Secretary

1208#093

DECLARATION OF EMERGENCY

Department of Health and Hospitals
Bureau of Health Services Financing

Medical Transportation Program
Emergency Ambulance Services
Reimbursement Rate Reduction
(LAC 50:XXVII.325 and 353)

The Department of Health and Hospitals, Bureau of Health Services Financing amends LAC 50:XXVII.325 and §353 in the Medical Assistance Program as authorized by R.S. 36:254 and pursuant to Title XIX of the Social Security Act and as directed by Act 13 of the 2012 Regular Session of the Louisiana Legislature which states: "The secretary is directed to utilize various cost containment measures to ensure expenditures remain at the level appropriated in this Schedule, including but not limited to precertification, preadmission screening, diversion, fraud control, utilization review and management, prior authorization, service limitations, drug therapy management, disease management, cost sharing, and other measures as permitted under federal law." This Emergency Rule is promulgated in accordance with the provisions of the Administrative Procedure Act, R.S. 49:953(B)(1) et seq., and shall be in effect for the maximum period allowed under the Act or until adoption of the final Rule, whichever occurs first.

As a result of a budgetary shortfall in state fiscal year 2011, the Department of Health and Hospitals, Bureau of Health Services Financing amended the provisions governing the reimbursement methodology for emergency medical transportation services to reduce the reimbursement rates (*Louisiana Register*, Volume 37, Number 10).

Due to a budgetary shortfall in state fiscal year 2013, the department promulgated an Emergency Rule which amended the provisions governing the reimbursement methodology for emergency medical transportation services to reduce the reimbursement rates (*Louisiana Register*, Volume 38, Number 7). In anticipation of a budgetary shortfall in state fiscal year 2013 as a result of the reduction in the state's disaster recovery federal medical assistance percentage (FMAP) rate, the department has now determined that it is necessary to amend the provisions governing emergency medical transportation services to further reduce reimbursement rates. This action is being taken to avoid a budget deficit in the medical assistance programs. It is estimated that implementation of this Emergency Rule will reduce expenditures in the Medicaid Program by approximately $872,421 for state fiscal year 2013.

Effective August 1, 2012, the Department of Health and Hospitals, Bureau of Health Services Financing amends the provisions governing the reimbursement methodology for emergency medical transportation services to reduce the reimbursement rates.

Title 50
PUBLIC HEALTH—MEDICAL ASSISTANCE
Part XXVII. Medical Transportation Program
Chapter 3. Emergency Medical Transportation
Subchapter B. Ground Transportation
§325. Reimbursement

A. - I. …

J. Effective for dates of service on or after August 1, 2012, the reimbursement rates for emergency ambulance transportation services shall be reduced by 5 percent of the rates on file as of July 31, 2012.

AUTHORITY NOTE: Promulgated in accordance with R.S. 36:254 and Title XIX of the Social Security Act.

HISTORICAL NOTE: Promulgated by the Department of Health and Hospitals, Office of the Secretary, Bureau of Health Services Financing, LR 34:878 (May 2008), amended by the Department of Health and Hospitals, Bureau of Health Services Financing, LR 36:1248 (June 2010), LR 36:2564 (November 2010), LR 37:3029 (October 2011), LR 38:

Subchapter C. Aircraft Transportation
§353. Reimbursement

A. - G. …

H. Effective for dates of service on or after August 1, 2012, the reimbursement rates for fixed winged and rotor winged emergency air ambulance services shall be reduced by 5 percent of the rates on file as of July 31, 2012.

AUTHORITY NOTE: Promulgated in accordance with R.S. 36:254 and Title XIX of the Social Security Act.

HISTORICAL NOTE: Promulgated by the Department of Health and Hospitals, Office of the Secretary, Bureau of Health Services Financing, LR 35:70 (January 2009), amended by the Department of Health and Hospitals, Bureau of Health Services Financing, LR 36:2594 (November 2010), LR 37:3029 (October 2011), LR 38:

Implementation of the provisions of this Rule may be contingent upon the approval of the U.S. Department of Health and Human Services, Centers for Medicare and Medicaid Services (CMS), if it is determined that submission to CMS for review and approval is required.

Interested persons may submit written comments to J. Ruth Kennedy, Bureau of Health Services Financing, P.O. Box 91030, Baton Rouge, LA 70821-9030. She is responsible for responding to inquiries regarding this Emergency Rule. A copy of this Emergency Rule is available for review by interested parties at parish Medicaid offices.

Bruce D. Greenstein
Secretary

1208#023

DECLARATION OF EMERGENCY

Department of Health and Hospitals
Bureau of Health Services Financing

Nursing Facilities—Reimbursement Rate Reduction
(LAC 50:II.20005)

The Department of Health and Hospitals, Bureau of Health Services Financing amends LAC 50:II.20005 in the Medical Assistance Program as authorized by R.S. 36:254 and pursuant to Title XIX of the Social Security Act and as directed by House Bill 1 of the 2012 Regular Session of the Louisiana Legislature which states: "The secretary is

directed to utilize various cost containment measures to ensure expenditures remain at the level appropriated in this Schedule, including but not limited to precertification, preadmission screening, diversion, fraud control, utilization review and management, prior authorization, service limitations, drug therapy management, disease management, cost sharing, and other measures as permitted under federal law." This Emergency Rule is promulgated in accordance with the provisions of the Administrative Procedure Act, R.S. 49:950 et seq., and shall be in effect for the maximum period allowed under the Act or until adoption of the final Rule, whichever occurs first.

The Department of Health and Hospitals, Bureau of Health Services Financing amended the provisions governing the reimbursement methodology for nursing facilities to reduce the per diem rates paid to non-state nursing facilities in order to remove the rebased amount and sunset the 2011-2012 nursing facility rate rebasing (*Louisiana Register,* Volume 38, Number 5).

As a result of a budgetary shortfall in state fiscal year 2013, the department promulgated an Emergency Rule which amended the provisions governing the reimbursement methodology for non-state nursing facilities to further reduce the reimbursement rates (*Louisiana Register*, Volume 38, Number 7).

The department now proposes to amend the provisions of the July 1, 2012 Emergency Rule governing the SFY 2013 rate reduction to revise the reduction of the per diem rate. This action is being taken to avoid a budget deficit in the medical assistance programs.

Effective July 20, 2012, the Department of Health and Hospitals, Bureau of Health Services Financing amends the provisions of the July 1, 2012 Emergency Rule governing the reimbursement methodology for non-state nursing facilities.

Title 50
PUBLIC HEALTH—MEDICAL ASSISTANCE
Part II. Nursing Facilities
Subpart 5. Reimbursement
Chapter 200. Reimbursement Methodology
§20005. Rate Determination
[Formerly LAC 50:VII.1305]

A. - K. …

L. Effective for dates of service on or after July 20, 2012, the average daily rates for non-state nursing facilities shall be reduced by 1.15 percent per day of the average daily rate on file as of July 19, 2012 after the sunset of the state fiscal year 2012 rebase and after the state fiscal year 2013 rebase.

AUTHORITY NOTE: Promulgated in accordance with R.S. 36:254 and Title XIX of the Social Security Act.

HISTORICAL NOTE: Promulgated by the Department of Health and Hospitals, Office of the Secretary, Bureau of Health Services Financing, LR 28:1791 (August 2002), amended LR 31:1596 (July 2005), LR 32:2263 (December 2006), LR 33:2203 (October 2007), amended by the Department of Health and Hospitals, Bureau of Health Services Financing, LR 36:325 (February 2010), repromulgated LR 36:520 (March 2010), amended LR 36:1556 (July 2010), LR 36:1782 (August 2010), LR 36:2566 (November 2010), amended LR 37:902 (March 2011), LR 37:1174 (April 2011), amended LR 37:2631 (September 2011), LR 38:1241 (May 2012), LR 38:

Implementation of the provisions of this Rule may be contingent upon the approval of the U.S. Department of Health and Human Services, Centers for Medicare and Medicaid Services (CMS), if it is determined that submission to CMS for review and approval is required.

Interested persons may submit written comments to J. Ruth Kennedy, Bureau of Health Services Financing, P.O. Box 91030, Baton Rouge, LA 70821-9030. She is responsible for responding to inquiries regarding this Emergency Rule. A copy of this Emergency Rule is available for review by interested parties at parish Medicaid offices.

Bruce D. Greenstein
Secretary

1208#006

DECLARATION OF EMERGENCY

Department of Health and Hospitals
Bureau of Health Services Financing

Nursing Facilities—Reimbursement Rate Reduction
Post-Rebase Rate Cut (LAC 50:II.20005)

The Department of Health and Hospitals, Bureau of Health Services Financing amends LAC 50:II.20005 in the Medical Assistance Program as authorized by R.S. 36:254 and pursuant to Title XIX of the Social Security Act and as directed by House Bill 1 of the 2012 Regular Session of the Louisiana Legislature which states: "The secretary is directed to utilize various cost containment measures to ensure expenditures remain at the level appropriated in this Schedule, including but not limited to precertification, preadmission screening, diversion, fraud control, utilization review and management, prior authorization, service limitations, drug therapy management, disease management, cost sharing, and other measures as permitted under federal law." This Emergency Rule is promulgated in accordance with the provisions of the Administrative Procedure Act, R.S. 49:950 et seq., and shall be in effect for the maximum period allowed under the Act or until adoption of the final Rule, whichever occurs first.

The Department of Health and Hospitals, Bureau of Health Services Financing amended the provisions governing the reimbursement methodology for nursing facilities to reduce the per diem rates paid to non-state nursing facilities in order to remove the rebased amount and sunset the 2011-2012 nursing facility rate rebasing (*Louisiana Register,* Volume 38, Number 5).

As a result of a budgetary shortfall in state fiscal year 2013, the department promulgated Emergency Rules which amended the provisions governing the reimbursement methodology for non-state nursing facilities to reduce the reimbursement rates (*Louisiana Register*, Volume 38, Number 7). In anticipation of a budgetary shortfall in state fiscal year 2013 as a result of the reduction in the state's disaster recovery Federal Medical Assistance Percentage (FMAP) rate, the department has now determined that it is necessary to amend the provisions governing the reimbursement methodology for non-state nursing facilities to further reduce the reimbursement rates. This action is

being taken to avoid a budget deficit in the medical assistance programs. It is estimated that implementation of this Emergency Rule will reduce expenditures in the Medicaid Program by approximately $9,711,456 for state fiscal year 2012-2013.

Effective September 1, 2012, the Department of Health and Hospitals, Bureau of Health Services Financing amends the provisions governing the reimbursement methodology for non-state nursing facilities to reduce the reimbursement rates.

Title 50
PUBLIC HEALTH—MEDICAL ASSISTANCE
Part II. Nursing Facilities
Subpart 5. Reimbursement
Chapter 200. Reimbursement Methodology
§20005. Rate Determination
[Formerly LAC 50:VII.1305]

A. - M. …

N. Effective for dates of service on or after September 1, 2012, the average daily rates for non-state nursing facilities shall be reduced by $1.91 per day of the average daily rate on file as of August 31, 2012 after the state fiscal year 2013 rebase which will occur on September 1, 2012.

AUTHORITY NOTE: Promulgated in accordance with R.S. 36:254 and Title XIX of the Social Security Act.

HISTORICAL NOTE: Promulgated by the Department of Health and Hospitals, Office of the Secretary, Bureau of Health Services Financing, LR 28:1791 (August 2002), amended LR 31:1596 (July 2005), LR 32:2263 (December 2006), LR 33:2203 (October 2007), amended by the Department of Health and Hospitals, Bureau of Health Services Financing, LR 36:325 (February 2010), repromulgated LR 36:520 (March 2010), amended LR 36:1556 (July 2010), LR 36:1782 (August 2010), LR 36:2566 (November 2010), amended LR 37:902 (March 2011), LR 37:1174 (April 2011), amended LR 37:2631 (September 2011), LR 38:1241 (May 2012), LR 38:

Implementation of the provisions of this Rule may be contingent upon the approval of the U.S. Department of Health and Human Services, Centers for Medicare and Medicaid Services (CMS), if it is determined that submission to CMS for review and approval is required.

Interested persons may submit written comments to J. Ruth Kennedy, Bureau of Health Services Financing, P.O. Box 91030, Baton Rouge, LA 70821-9030. She is responsible for responding to inquiries regarding this Emergency Rule. A copy of this Emergency Rule is available for review by interested parties at parish Medicaid offices.

Bruce D. Greenstein
Secretary

1208#100

DECLARATION OF EMERGENCY

Department of Health and Hospitals
Bureau of Health Services Financing

Nursing Facilities—Reimbursement Rate Reduction
Pre-Rebase Rate Cut (LAC 50:II.20005)

The Department of Health and Hospitals, Bureau of Health Services Financing amends LAC 50:II.20005 in the Medical Assistance Program as authorized by R.S. 36:254 and pursuant to Title XIX of the Social Security Act and as directed by Act 13 of the 2012 Regular Session of the Louisiana Legislature which states: "The secretary is directed to utilize various cost containment measures to ensure expenditures remain at the level appropriated in this Schedule, including but not limited to precertification, preadmission screening, diversion, fraud control, utilization review and management, prior authorization, service limitations, drug therapy management, disease management, cost sharing, and other measures as permitted under federal law." This proposed Rule is promulgated in accordance with the provisions of the Administrative Procedure Act, R.S. 49:950 et seq., and shall be in effect for the maximum period allowed under the Act or until adoption of the final Rule, whichever occurs first.

The Department of Health and Hospitals, Bureau of Health Services Financing amended the provisions governing the reimbursement methodology for nursing facilities to reduce the per diem rates paid to non-state nursing facilities in order to remove the rebased amount and sunset the 2011-2012 nursing facility rate rebasing (*Louisiana Register,* Volume 38, Number 5).

As a result of a budgetary shortfall in state fiscal year 2013, the department promulgated Emergency Rules which amended the provisions governing the reimbursement methodology for non-state nursing facilities to reduce the reimbursement rates (*Louisiana Register*, Volume 38, Number 7). In anticipation of a budgetary shortfall in state fiscal year 2013 as a result of the reduction in the state's disaster recovery Federal Medical Assistance Percentage (FMAP) rate, the department has now determined that it is necessary to amend the provisions governing the reimbursement methodology for non-state nursing facilities to further reduce the reimbursement rates. This action is being taken to avoid a budget deficit in the medical assistance programs. It is estimated that implementation of this Emergency Rule will reduce expenditures in the Medicaid Program by approximately $69,512,944 for state fiscal year 2012-2013.

Effective September 1, 2012, the Department of Health and Hospitals, Bureau of Health Services Financing amends the provisions governing the reimbursement methodology for non-state nursing facilities to reduce the reimbursement rates.

Title 50
PUBLIC HEALTH—MEDICAL ASSISTANCE
Part II. Nursing Facilities
Subpart 5. Reimbursement
Chapter 200. Reimbursement Methodology
§20005. Rate Determination [Formerly LAC 50:VII.1305]

A. - L. …

M. Effective for dates of service on or after September 1, 2012, the average daily rates for non-state nursing facilities shall be reduced by $13.69 per day of the average daily rate on file as of August 31, 2012 before the state fiscal year 2013 rebase which will occur on September 1, 2012.

AUTHORITY NOTE: Promulgated in accordance with R.S. 36:254 and Title XIX of the Social Security Act.

HISTORICAL NOTE: Promulgated by the Department of Health and Hospitals, Office of the Secretary, Bureau of Health Services Financing, LR 28:1791 (August 2002), amended LR 31:1596 (July 2005), LR 32:2263 (December 2006), LR 33:2203 (October 2007), amended by the Department of Health and

Hospitals, Bureau of Health Services Financing, LR 36:325 (February 2010), repromulgated LR 36:520 (March 2010), amended LR 36:1556 (July 2010), LR 36:1782 (August 2010), LR 36:2566 (November 2010), amended LR 37:902 (March 2011), LR 37:1174 (April 2011), amended LR 37:2631 (September 2011), LR 38:1241 (May 2012), LR 38:

Implementation of the provisions of this Rule may be contingent upon the approval of the U.S. Department of Health and Human Services, Centers for Medicare and Medicaid Services (CMS), if it is determined that submission to CMS for review and approval is required.

Interested persons may submit written comments to J. Ruth Kennedy, Bureau of Health Services Financing, P.O. Box 91030, Baton Rouge, LA 70821-9030. She is responsible for responding to inquiries regarding this Emergency Rule. A copy of this Emergency Rule is available for review by interested parties at parish Medicaid offices.

Bruce D. Greenstein
Secretary

1208#101

DECLARATION OF EMERGENCY

Department of Health and Hospitals
Bureau of Health Services Financing

Outpatient Hospital Services—Non-Rural, Non-State Hospitals and Children's Specialty Hospitals Reimbursement Rate Reduction
(LAC 50:V.5313, 5317, 5513, 5517, 5713, 5719, 6115 and 6119)

The Department of Health and Hospitals, Bureau of Health Services Financing amends LAC 50:V.5313, §5317, §5513, §5517, §5713, §5719, §6115 and §6119 in the Medical Assistance Program as authorized by R.S. 36:254 and pursuant to Title XIX of the Social Security Act and as directed by Act 13 of the 2012 Regular Session of the Louisiana Legislature which states: "The secretary is directed to utilize various cost containment measures to ensure expenditures remain at the level appropriated in this Schedule, including but not limited to precertification, preadmission screening, diversion, fraud control, utilization review and management, prior authorization, service limitations, drug therapy management, disease management, cost sharing, and other measures as permitted under federal law." This Emergency Rule is promulgated in accordance with the provisions of the Administrative Procedure Act, R.S. 49:953(B)(1) et seq., and shall be in effect for the maximum period allowed under the Act or until adoption of the final Rule, whichever occurs first.

As a result of a budgetary shortfall in state fiscal year 2011, the Department of Health and Hospitals, Bureau of Health Services Financing amended the provisions governing the reimbursement methodology for outpatient hospital services to reduce the reimbursement rates paid to non-rural, non-state hospitals and children's specialty hospitals (*Louisiana Register*, Volume 37, Number 11).

In anticipation of a budgetary shortfall in state fiscal year 2013 as a result of the reduction in the state's disaster recovery federal medical assistance percentage (FMAP) rate, the department has determined that it is necessary to amend the provisions governing the reimbursement methodology for outpatient hospital services to reduce the reimbursement rates paid to non-rural, non-state hospitals and children's specialty hospitals. This action is being taken to avoid a budget deficit in the medical assistance programs. It is estimated that implementation of this Emergency Rule will reduce expenditures for outpatient hospital services by approximately $4,459,638 for state fiscal year 2012-2013.

Taking the proposed rate reductions into consideration, the department has carefully reviewed the proposed rates and is satisfied that they are consistent with efficiency, economy and quality of care and are sufficient to enlist enough providers so that private (non-state) outpatient hospital services and children's specialty hospital services under the State Plan are available at least to the extent that they are available to the general population in the state.

Effective August 1, 2012, the Department of Health and Hospitals, Bureau of Health Services Financing amends the provisions governing the reimbursement methodology for outpatient hospital services to reduce the reimbursement rates.

Title 50
PULIC HEALTH—MEDICAL ASSISTANCE
Part V. Hospital Services
Subpart 5. Outpatient Hospitals

Chapter 53. Outpatient Surgery

Subchapter B. Reimbursement Methodology

§5313. Non-Rural, Non-State Hospitals

A. - F.1. …

G. Effective for dates of service on or after August 1, 2012, the reimbursement rates paid to non-rural, non-state hospitals for outpatient surgery shall be reduced by 3.7 percent of the fee schedule on file as of July 31, 2012.

AUTHORITY NOTE: Promulgated in accordance with R.S. 46:153 and Title XIX of the Social Security Act.

HISTORICAL NOTE: Promulgated by the Department of Health and Hospitals, Bureau of Health Service Financing, LR 35:1900 (September 2009), amended LR 36:1250 (June 2010), LR 36:1250 (June 2010), LR 36:2041 (September 2010), LR 37:3266 (November 2011), LR 38:

§5317. Children's Specialty Hospitals

A. - D.1. …

E. Effective for dates of service on or after August 1, 2012, the reimbursement rates paid to children's specialty hospitals for outpatient surgery shall be reduced by 3.7 percent of the fee schedule on file as of July 31, 2012.

AUTHORITY NOTE: Promulgated in accordance with R.S. 36:254 and Title XIX of the Social Security Act.

HISTORICAL NOTE: Promulgated by the Department of Health and Hospitals, Bureau of Health Services Financing, LR 36:2042 (September 2010), amended LR 37:3266 (November 2011), LR 38:

Chapter 55. Clinic Services

Subchapter B. Reimbursement Methodology

§5513. Non-Rural, Non-State Hospitals

A. - F.1. …

G. Effective for dates of service on or after August 1, 2012, the reimbursement rates paid to non-rural, non-state hospitals for outpatient clinic services shall be reduced by 3.7 percent of the fee schedule on file as of July 31, 2012.

AUTHORITY NOTE: Promulgated in accordance with R.S. 46:153 and Title XIX of the Social Security Act.

HISTORICAL NOTE: Promulgated by the Department of Health and Hospitals, Bureau of Health Service Financing, LR

35:1900 (September 2009), amended LR 36:1250 (June 2010), LR 36:1250 (June 2010), LR 36:2042 (September 2010), LR 37:3266 (November 2011), LR 38:

§5517. Children's Specialty Hospitals

A. - D. …

E. Effective for dates of service on or after August 1, 2012, the reimbursement rates paid to children's specialty hospitals for outpatient hospital clinic services shall be reduced by 3.7 percent of the fee schedule on file as of July 31, 2012.

AUTHORITY NOTE: Promulgated in accordance with R.S. 36:254 and Title XIX of the Social Security Act.

HISTORICAL NOTE: Promulgated by the Department of Health and Hospitals, Bureau of Health Services Financing, LR 36:2042 (September 2010), amended LR 37:3266 (November 2011), LR 38:

Chapter 57. Laboratory Services

Subchapter B. Reimbursement Methodology

§5713. Non-Rural, Non-State Hospitals

A. - F.1. …

G. Effective for dates of service on or after August 1, 2012, the reimbursement rates paid to non-rural, non-state hospitals for outpatient laboratory services shall be reduced by 3.7 percent of the fee schedule on file as of July 31, 2012.

AUTHORITY NOTE: Promulgated in accordance with R.S. 46:153 and Title XIX of the Social Security Act.

HISTORICAL NOTE: Promulgated by the Department of Health and Hospitals, Bureau of Health Service Financing, LR 35:1900 (September 2009), amended LR 36:1250 (June 2010), LR 36:1250 (June 2010), LR 36:2042 (September 2010), LR 37:3266 (November 2011), LR 38:

§5719. Children's Specialty Hospitals

A. - D. …

E. Effective for dates of service on or after August 1, 2012, the reimbursement rates paid to children's specialty hospitals for outpatient clinical diagnostic laboratory services shall be reduced by 3.7 percent of the fee schedule on file as of July 31, 2012.

AUTHORITY NOTE: Promulgated in accordance with R.S. 36:254 and Title XIX of the Social Security Act.

HISTORICAL NOTE: Promulgated by the Department of Health and Hospitals, Bureau of Health Services Financing, LR 36:2043 (September 2010), amended LR 37:3267 (November 2011), LR 38:

Chapter 61. Other Outpatient Hospital Services

Subchapter B. Reimbursement Methodology

§6115. Non-Rural, Non-State Hospitals

A. - F.1. …

G. Effective for dates of service on or after August 1, 2012, the reimbursement rates paid to non-rural, non-state hospitals for outpatient hospital services other than clinical diagnostic laboratory services, outpatient surgeries, rehabilitation services and outpatient hospital facility fees shall be reduced by 3.7 percent of the rates in effect on July 31, 2012. Final reimbursement shall be at 67.13 percent of allowable cost through the cost settlement process.

AUTHORITY NOTE: Promulgated in accordance with R.S. 46:153 and Title XIX of the Social Security Act.

HISTORICAL NOTE: Promulgated by the Department of Health and Hospitals, Bureau of Health Service Financing, LR 35:1900 (September 2009), amended LR 36:1250 (June 2010), LR 36:1250 (June 2010), LR 36:2043 (September 2010), LR 37:3267 (November 2011), LR 38:

§6119. Children's Specialty Hospitals

A. - D.1. …

E. Effective for dates of service on or after August 1, 2012, the reimbursement fees paid to children's specialty hospitals for outpatient hospital services other than rehabilitation services and outpatient hospital facility fees shall be reduced by 3.7 percent of the rates in effect on July 31, 2012. Final reimbursement shall be 82.96 percent of allowable cost as calculated through the cost report settlement process.

AUTHORITY NOTE: Promulgated in accordance with R.S. 36:254 and Title XIX of the Social Security Act.

HISTORICAL NOTE: Promulgated by the Department of Health and Hospitals, Bureau of Health Services Financing, LR 36:2044 (September 2010), amended LR 37:3267 (November 2011), LR 38:

Implementation of the provisions of this Rule may be contingent upon the approval of the U.S. Department of Health and Human Services, Centers for Medicare and Medicaid Services (CMS), if it is determined that submission to CMS for review and approval is required.

Interested persons may submit written comments to J. Ruth Kennedy, Bureau of Health Services Financing, P.O. Box 91030, Baton Rouge, LA 70821-9030. She is responsible for responding to inquiries regarding this Emergency Rule. A copy of this Emergency Rule is available for review by interested parties at parish Medicaid offices.

Bruce D. Greenstein
Secretary

1208#024

DECLARATION OF EMERGENCY

Department of Health and Hospitals
Bureau of Health Services Financing

Outpatient Hospital Services
State-Owned Hospitals—Reimbursement Rate Reduction
(LAC 50:V.5319, 5519, 5715 and 6127)

The Department of Health and Hospitals, Bureau of Health Services Financing amends LAC 50:V.5319, §5519, §5715, and §6127 in the Medical Assistance Program as authorized by R.S. 36:254 and pursuant to Title XIX of the Social Security Act and as directed by Act 13 of the 2012 Regular Session of the Louisiana Legislature which states: "The secretary is directed to utilize various cost containment measures to ensure expenditures remain at the level appropriated in this Schedule, including but not limited to precertification, preadmission screening, diversion, fraud control, utilization review and management, prior authorization, service limitations, drug therapy management, disease management, cost sharing, and other measures as permitted under federal law." This Emergency Rule is promulgated in accordance with the provisions of the Administrative Procedure Act, R.S. 49:953(B)(1) et seq., and shall be in effect for the maximum period allowed under the Act or until adoption of the final Rule, whichever occurs first.

The Department of Health and Hospitals, Bureau of Health Services Financing promulgated an Emergency Rule

which amended the provisions governing the reimbursement methodology for outpatient hospital services in order to continue medical education payments to state-owned hospitals when the hospitals are reimbursed by prepaid risk-bearing managed care organizations for outpatient surgeries, clinic services, rehabilitation services, and other covered outpatient hospital services (*Louisiana Register*, Volume 38, Number 2). The February 10, 2012 Emergency Rule was amended to clarify the provisions governing the reimbursement methodology for outpatient hospital services (*Louisiana Register*, Volume 38, Number 3).

In anticipation of a budgetary shortfall in state fiscal year 2013 as a result of the reduction in the state's disaster recovery federal medical assistance percentage (FMAP) rate, the department has determined that it is necessary to amend the provisions governing the reimbursement methodology for outpatient hospital services to reduce the reimbursement rates paid to state-owned hospitals. This action is being taken to avoid a budget deficit in the medical assistance programs. It is estimated that implementation of this Emergency Rule will reduce expenditures in the Medicaid Program by approximately $5,058,675 for state fiscal year 2012-2013.

Effective August 1, 2012, the Department of Health and Hospitals, Bureau of Health Services Financing amends the provisions governing the reimbursement methodology for outpatient hospital services to reduce the reimbursement rates paid to state-owned hospitals.

Title 50
PUBLIC HEALTH—MEDICAL ASSISTANCE
Part V. Hospital Services
Subpart 5. Outpatient Hospitals

Chapter 53. Outpatient Surgery
Subchapter B. Reimbursement Methodology
§5319. State-Owned Hospitals

A. - A.2. …

B. Effective for dates of service on or after August 1, 2012, the reimbursement rates paid to state-owned hospitals for outpatient surgery shall be reduced by 10 percent of the fee schedule on file as of July 31, 2012.

AUTHORITY NOTE: Promulgated in accordance with R.S. 46:153 and Title XIX of the Social Security Act.

HISTORICAL NOTE: Promulgated by the Department of Health and Hospitals, Bureau of Health Service Financing, LR 38:

Chapter 55. Clinic Services
Subchapter B. Reimbursement Methodology
§5519. State-Owned Hospitals

A. - A.2. …

B. Effective for dates of service on or after August 1, 2012, the reimbursement rates paid to state-owned hospitals for outpatient clinic services shall be reduced by 10 percent of the of the fee schedule on file as of July 31, 2012.

AUTHORITY NOTE: Promulgated in accordance with R.S. 36:254 and Title XIX of the Social Security Act.

HISTORICAL NOTE: Promulgated by the Department of Health and Hospitals, Bureau of Health Services Financing, LR 38:

Chapter 57. Laboratory Services
Subchapter B. Reimbursement Methodology
§5715. State-Owned Hospitals

A. …

B. Effective for dates of service on or after August 1, 2012, the reimbursement rates paid to state-owned hospitals for outpatient laboratory services shall be reduced by 10 percent of the fee schedule on file as of July 31, 2012.

AUTHORITY NOTE: Promulgated in accordance with R.S. 46:153 and Title XIX of the Social Security Act.

HISTORICAL NOTE: Promulgated by the Department of Health and Hospitals, Office of the Secretary, Bureau of Health Service Financing, LR 35:956 (May 2009), amended by the Department of Health and Hospitals, Bureau of Health Services Financing, LR 38:

Chapter 61. Other Outpatient Hospital Services
Subchapter B. Reimbursement Methodology
§6127. State-Owned Hospitals

A. - B.2. …

C. Effective for dates of service on or after August 1, 2012, the reimbursement rates paid to state hospitals for outpatient hospital services other than clinical diagnostic laboratory services, outpatient surgeries, rehabilitation services and outpatient hospital facility fees shall be reduced by 10 percent of the rates in effect on July 31, 2012. Final reimbursement shall be at 90 percent of allowable cost through the cost settlement process.

AUTHORITY NOTE: Promulgated in accordance with R.S. 36:254 and Title XIX of the Social Security Act.

HISTORICAL NOTE: Promulgated by the Department of Health and Hospitals, Office of the Secretary, Bureau of Health Services Financing, LR 35:957 (May 2009), amended by the Department of Health and Hospitals, Bureau of Health Services Financing, LR 38:

Implementation of the provisions of this Rule may be contingent upon the approval of the U.S. Department of Health and Human Services, Centers for Medicare and Medicaid Services (CMS), if it is determined that submission to CMS for review and approval is required.

Interested persons may submit written comments to J. Ruth Kennedy, Bureau of Health Services Financing, P.O. Box 91030, Baton Rouge, LA 70821-9030. She is responsible for responding to inquiries regarding this Emergency Rule. A copy of this Emergency Rule is available for review by interested parties at parish Medicaid offices.

Bruce D. Greenstein
Secretary

1208#025

DECLARATION OF EMERGENCY

Department of Health and Hospitals
Bureau of Health Services Financing

Pharmacy Benefits Management Program
Medication Administration
Influenza Vaccinations
(LAC 50:XXIX.123, 991 and 993)

The Department of Health and Hospitals, Bureau of Health Services Financing amends LAC 50:XXIX.123 and §991 and adopts §993 in the Medical Assistance Program as authorized by R.S. 36:254 and pursuant to Title XIX of the Social Security Act. This Emergency Rule is promulgated in accordance with the provisions of the Administrative Procedure Act, R.S. 49:953(B)(1) et seq., and shall be in effect for the maximum period allowed under the Act or until adoption of the final Rule, whichever occurs first.

The Department of Health and Hospitals, Bureau of Health Services Financing amended the provisions governing the Pharmacy Benefits Management Program to allow payment for the administration of H1N1 vaccine by qualified Medicaid enrolled pharmacists (*Louisiana Register,* Volume 36, Number 8). The department promulgated an Emergency Rule which amended the provisions governing the Pharmacy Benefits Management Program to allow payment for the administration of the influenza vaccine for all Medicaid recipients, and to provide reimbursement for the cost of the influenza vaccine for Medicaid recipients 19 years of age and older (*Louisiana Register*, Volume 36, Number 12). This Emergency Rule is being promulgated to continue the provisions of the January 1, 2011 Emergency Rule. This action is being taken to promote the health and welfare of Medicaid recipients by facilitating access to the influenza vaccine.

Effective August 28, 2012, the Department of Health and Hospitals, Bureau of Health Services Financing amends the provisions governing the Pharmacy Benefits Management Program to allow reimbursement for the influenza vaccine and administration of the vaccine.

Title 50
PUBLIC HEALTH—MEDICAL ASSISTANCE
Part XXIX. Pharmacy

Chapter 1. General Provisions

§123. Medication Administration

A. Influenza Vaccine Administration. The department shall provide coverage for administration of the influenza vaccine by a qualified pharmacist when:

1. the pharmacist has been credentialed by the Louisiana Board of Pharmacy to administer medications; and

2. the pharmacist is Medicaid enrolled.

AUTHORITY NOTE: Promulgated in accordance with R.S. 36:254 and Title XIX of the Social Security Act.

HISTORICAL NOTE: Promulgated by the Department of Health and Hospitals, Bureau of Health Services Financing, LR 36:1783 (August 2010), amended LR 38:

Chapter 9. Methods of Payment

Subchapter H. Vaccines

§991. Vaccine Administration Fees

A. ...

B. Effective for dates of service on or after January 1, 2011, the reimbursement for administration of the influenza vaccine for all recipients shall be reimbursed at $15.22 for subcutaneous or intramuscular injection, $10.90 for nasal/oral administration or billed charges, whichever is the lesser amount. This fee includes counseling, when performed.

AUTHORITY NOTE: Promulgated in accordance with R.S. 36:254 and Title XIX of the Social Security Act.

HISTORICAL NOTE: Promulgated by the Department of Health and Hospitals, Bureau of Health Services Financing, LR 36:1783 (August 2010), amended LR 38:

§993. Vaccine Reimbursement

A. Effective for dates of service on or after January 1, 2011, the influenza vaccine for recipients aged 19 and over shall be reimbursed at 90 percent of the 2009 Louisiana Medicare Average Sales Price (ASP) allowable or billed charges, whichever is the lesser amount.

AUTHORITY NOTE: Promulgated in accordance with R.S. 36:254 and Title XIX of the Social Security Act.

HISTORICAL NOTE: Promulgated by the Department of Health and Hospitals, Bureau of Health Services Financing, LR 38:

Interested persons may submit written comments to J. Ruth Kennedy, Bureau of Health Services Financing, P.O. Box 91030, Baton Rouge, LA 70821-9030. She is responsible for responding to all inquiries regarding this Emergency Rule. A copy of this Emergency Rule is available for review by interested parties at parish Medicaid offices.

Bruce D. Greenstein
Secretary

1208#109

DECLARATION OF EMERGENCY

Department of Health and Hospitals
Bureau of Health Services Financing

Professional Services Program—Anesthesia Services
Reimbursement Rate Reduction
(LAC 50:IX.15133 and 15135)

The Department of Health and Hospitals, Bureau of Health Services Financing amends LAC 50:IX.15133 and §15135 in the Medical Assistance Program as authorized by R.S. 36:254 and pursuant to Title XIX of the Social Security Act and as directed by House Bill 1 of the 2012 Regular Session of the Louisiana Legislature which states: "The secretary is directed to utilize various cost containment measures to ensure expenditures remain at the level appropriated in this Schedule, including but not limited to precertification, preadmission screening, diversion, fraud control, utilization review and management, prior authorization, service limitations, drug therapy management, disease management, cost sharing, and other measures as permitted under federal law." This Emergency Rule is promulgated in accordance with the provisions of the Administrative Procedure Act, R.S. 49:953(B)(1) et seq., and shall be in effect for the maximum period allowed under the Act or until adoption of the final Rule, whichever occurs first.

The Department of Health and Hospitals, Bureau of Health Services Financing amended the provisions governing anesthesia services in order to revise the formula-based reimbursement methodology for services rendered by physicians and certified registered nurse anesthetists (CRNAs), and to reorganize these provisions in a clear and concise manner in the *Louisiana Administrative Code* (*Louisiana Register*, Volume 36, Number 6).

As a result of a budgetary shortfall in state fiscal year 2013, the department promulgated an Emergency Rule which amended the provisions governing the reimbursement methodology for anesthesia services to reduce the reimbursement rates (*Louisiana Register*, Volume 38, Number 7). The department has determined that it is necessary to amend the July 1, 2012 Emergency Rule to adjust the rate reduction and to include certified registered nurse anesthetists in the rate reduction. This action is being taken to avoid a budget deficit in the medical assistance programs.

Effective July 20, 2012, the Department of Health and Hospitals, Bureau of Health Services Financing amends the provisions of the July 1, 2012 Emergency Rule governing

the reimbursement methodology for anesthesia services which reduced the reimbursement rates.

Title 50
PUBLIC HEALTH—MEDICAL ASSISTANCE
Part IX. Professional Services Program
Subpart 15. Reimbursement
Chapter 151. Reimbursement Methodology
Subchapter D. Anesthesia Services
§15133. Formula-Based Reimbursement

A. - C. 2. ...

D. Effective for dates of service on or after July 1, 2012, the reimbursement for formula-based anesthesia services shall be reduced by 3.7 percent of the rates in effect on June 30, 2012.

E. Effective for dates of service on or after July 20, 2012, the 3.7 percent reimbursement rate reduction for formula-based anesthesia services shall be adjusted to 3.4 percent of the rates in effect on June 30, 2012.

F. Effective for dates of service on or after July 20, 2012, the reimbursement for formula-based anesthesia services rendered by a CRNA shall be reduced by 3.4 percent of the rates in effect on July 19, 2012.

AUTHORITY NOTE: Promulgated in accordance with R.S. 36:254 and Title XIX of the Social Security Act.

HISTORICAL NOTE: Promulgated by the Department of Health and Hospitals, Bureau of Health Services Financing, LR 36:1251 (June 2010), amended LR 36:2282 (October 2010), LR 38:

§15135. Flat Fee Reimbursement

A. - D.1. ...

E. Effective for dates of service on or after July 1, 2012, the flat fee reimbursement rates paid for anesthesia services shall be reduced by 3.7 percent of the rates in effect on June 30, 2012.

F. Effective for dates of service on or after July 20, 2012, the 3.7 percent rate reduction for flat fee reimbursement of anesthesia services shall be adjusted to 3.4 percent of the rates in effect on June 30, 2012.

G. Effective for dates of service on or after July 20, 2012, the flat fee reimbursement for anesthesia services rendered by a CRNA shall be reduced by 3.4 percent of the rates in effect on July 19, 2012.

AUTHORITY NOTE: Promulgated in accordance with R.S. 36:254 and Title XIX of the Social Security Act.

HISTORICAL NOTE: Promulgated by the Department of Health and Hospitals, Bureau of Health Services Financing, amended LR 36:1251 (June 2010), LR 38:

Implementation of the provisions of this Rule may be contingent upon the approval of the U.S. Department of Health and Human Services, Centers for Medicare and Medicaid Services (CMS), if it is determined that submission to CMS for review and approval is required.

Interested persons may submit written comments to J. Ruth Kennedy, Bureau of Health Services Financing, P.O. Box 91030, Baton Rouge, LA 70821-9030. She is responsible for responding to inquiries regarding this Emergency Rule. A copy of this Emergency Rule is available for review by interested parties at parish Medicaid offices.

Bruce D. Greenstein
Secretary

1208#005

DECLARATION OF EMERGENCY

Department of Health and Hospitals
Bureau of Heath Services Financing

Professional Services Program
Fluoride Varnish Applications
(LAC 50:IX.901-905 and 15105)

The Department of Health and Hospitals, Bureau of Health Services Financing adopts LAC 50:IX.901-905 and §15105 in the Medical Assistance Program as authorized by R.S. 36:254 and pursuant to Title XIX of the Social Security Act. This Emergency Rule is promulgated in accordance with the provisions of the Administrative Procedure Act, R.S. 49:953(B)(1) et seq., and shall be in effect for the maximum period allowed under the Act or until adoption of the final Rule, whichever occurs first.

The Department of Health and Hospitals, Bureau of Health Services Financing promulgated an Emergency Rule which amended the provisions governing the Professional Services Program in order to establish Medicaid reimbursement for fluoride varnish application services rendered by qualified providers in a physician office setting (*Louisiana Register*, Volume 37, Number 11). The department anticipates that coverage of this service will reduce and/or prevent future oral health problems that could have a negative effect on the overall health of children and may reduce the Medicaid cost associated with the treatment of such oral health conditions.

The department promulgated an Emergency Rule which amended the December 1, 2011 Emergency Rule to clarify the general provisions and scope of services governing fluoride varnish applications (*Louisiana Register*, Volume 38, Number 1). This Emergency Rule is being promulgated to continue the provisions of the January 20, 2012 Emergency Rule. This action is being taken to promote the health and welfare of Medicaid recipients.

Effective September 18, 2012, the Department of Health and Hospitals, Bureau of Health Services Financing amends the provisions governing the Professional Services Program.

Title 50
PUBLIC HEALTH—MEDICAL ASSISTANCE
Part IX. Professional Services Program
Subpart 1. General Provisions
Chapter 9. Fluoride Varnish Application Services
§901. General Provisions

A. Effective for dates of service on or after December 1, 2011, the department shall provide Medicaid coverage of fluoride varnish application services to recipients from six months through five years of age.

AUTHORITY NOTE: Promulgated in accordance with R.S. 36:254 and Title XIX of the Social Security Act.

HISTORICAL NOTE: Promulgated by the Department of Health and Hospitals, Bureau of Health Services Financing, LR 38:

§903. Scope of Services

A. Fluoride varnish application services performed in a physician office setting shall be reimbursed by the Medicaid

Program when rendered by the appropriate professional services providers.

B. Fluoride varnish applications may be covered once every six months per Medicaid recipient.

AUTHORITY NOTE: Promulgated in accordance with R.S. 36:254 and Title XIX of the Social Security Act.

HISTORICAL NOTE: Promulgated by the Department of Health and Hospitals, Bureau of Health Services Financing, LR 38:

§905. Provider Participation

A. The entity seeking reimbursement for fluoride varnish application services must be an enrolled Medicaid provider in the Professional Services Program. The following Medicaid enrolled providers may receive reimbursement for fluoride varnish applications:

1. physicians;
2. nurse practitioners; and
3. physician assistants.

B. The following providers who have been deemed as competent to perform the service by the certified physician may perform fluoride varnish application services in a physician office setting:

1. the appropriate dental providers;
2. physicians;
3. physician assistants;
4. nurse practitioners;
5. registered nurses; or
6. licensed practical nurses.

C. Professional service providers shall review the Smiles for Life training module for fluoride varnish and successfully pass the post assessment.

AUTHORITY NOTE: Promulgated in accordance with R.S. 36:254 and Title XIX of the Social Security Act.

HISTORICAL NOTE: Promulgated by the Department of Health and Hospitals, Bureau of Health Services Financing, LR 38:

Subpart 15. Reimbursement

Chapter 151. Reimbursement Methodology

Subchapter A. General Provisions

§15105. Fluoride Varnish Application Services

A. Effective for dates of service on or after December 1, 2011, the Medicaid Program shall provide reimbursement for fluoride varnish application services rendered by qualified health care professionals in a physician office setting.

B. Reimbursement for fluoride varnish application services shall be a flat fee based on the appropriate HCPCS code.

AUTHORITY NOTE: Promulgated in accordance with R.S. 36:254 and Title XIX of the Social Security Act.

HISTORICAL NOTE: Promulgated by the Department of Health and Hospitals, Bureau of Health Services Financing, LR 38:

Interested persons may submit written comments to J. Ruth Kennedy, Bureau of Health Services Financing, P.O. Box 91030, Baton Rouge, LA 70821-9030. She is responsible for responding to inquiries regarding this Emergency Rule. A copy of this Emergency Rule is available for review by interested parties at parish Medicaid offices.

Bruce D. Greenstein
Secretary

1208#110

DECLARATION OF EMERGENCY

Department of Health and Hospitals
Bureau of Health Services Financing

Psychiatric Residential Treatment Facilities
Licensing Standards
(LAC 48:I.9003, 9009, 9077, 9093, and 9097)

The Department of Health and Hospitals, Bureau of Health Services Financing amends LAC 48:I.9003, §9009, §9077, §9093 and §9097 as authorized by R.S. 40:2179-2179.1. This Emergency Rule is promulgated in accordance with the provisions of the Administrative Procedure Act, R.S. 49:953(B)(1) et seq., and shall be in effect for the maximum period allowed under the Act or until adoption of the final Rule, whichever occurs first.

The Department of Health and Hospitals, Bureau of Health Services Financing amended the provisions governing the licensing standards for psychiatric residential treatment facilities in order to prepare for the transition to a comprehensive system of delivery for behavioral health services in the state (*Louisiana Register*, Volume 38, Number 2). The department now amends the provisions governing the licensing of psychiatric residential treatment facilities (PRTFs) in order to revise the licensing standards as a means of assisting PRTFs to comply with the standards.

This action is being taken to avoid imminent peril to the public health, safety and welfare of the children and adolescents who need these services. It is estimated that implementation of this Emergency Rule will have no programmatic costs for state fiscal year 2012-2013.

Effective August 20, 2012, the Department of Health and Hospitals, Bureau of Health Services Financing amends the provisions governing the licensing of psychiatric residential treatment facilities.

Title 48

PUBLIC HEALTH—GENERAL

Part I. General Administration

Subpart 3. Licensing

Chapter 90. Psychiatric Residential Treatment Facilities (under 21)

Subchapter A. General Provisions

§9003. Definitions

A. ...

* * *

Normal Business Hours—between the hours of 7 a.m. and 6 p.m. every Monday through Friday, except for holidays.

* * *

HISTORICAL NOTE: Promulgated by the Department of Health and Hospitals, Office of the Secretary, Bureau of Health Services Financing, LR 30:54 (January 2004), amended by the Department of Health and Hospitals, Bureau of Health Services Financing, LR 38:371(February 2012), LR 38:

Subchapter B. Licensing

§9009. Initial Licensing Application Process

A. - C.4. ...

5. a copy of statewide criminal background checks on all individual owners with a 5 percent or more ownership

interest in the PRTF entity, and on all administrators or managing employees;

C.6. - F. ...

AUTHORITY NOTE: Promulgated in accordance with R.S. 36:254 and R.S. 40:2009.

HISTORICAL NOTE: Promulgated by the Department of Health and Hospitals, Bureau of Health Services Financing, LR 38:373(February 2012), amended LR 38:

Subchapter F. Physical Environment

§9077. Interior Space

A. - T. ...

U. The provider shall have a laundry space complete with washers and dryers that are sufficient to meet the needs of the residents

V. Repealed.

AUTHORITY NOTE: Promulgated in accordance with R.S. 36:254 and R.S. 40:2009.

HISTORICAL NOTE: Promulgated by the Department of Health and Hospitals, Office of the Secretary, Bureau of Health Services Financing, LR 30:68 (January 2004), amended by the Department of Health and Hospitals, Bureau of Health Services Financing, LR 38:391 (February 2012), LR 38:

Subchapter H. Additional Requirements for Mental Health PRTFs

§9093. Personnel Qualifications, Responsibilities, and Requirements

A. - A.2.a.iv. ...

b. The clinical director is responsible for the following:

i. providing a monthly minimum of one hour of on-site clinical direction per resident;

(a). the governing body may delegate some or all of this responsibility to another physician(s) who meets the qualifications of a clinical director; and

ii. ...

3. LMHPs, MHPs, and MHSs. The PRTF shall provide or make available adequate numbers of LMHPs, MHPs, and MHSs to care for its residents. There shall be at least one LMHP or MHP supervisor on duty at least 40 hours/week during normal business hours at the facility and as required by the treatment plan. When not on duty at the facility, there shall be a LMHP or MHP on call. The PRTF shall develop a policy to determine the number of LHMPs, MHPs, MHSs on duty and the ratio of LHMPs and MHPs to MHSs based on the needs of its residents.

A.3.a. - B. ...

AUTHORITY NOTE: Promulgated in accordance with R.S. 36:254 and R.S. 40:2009.

HISTORICAL NOTE: Promulgated by the Department of Health and Hospitals, Bureau of Health Services Financing, LR 38:397 (February 2012), amended LR 38:

Subchapter I. Additional Requirements for Addictive Disorder PRTFs

§9097. Personnel Qualifications, Responsibilities, and Requirements for Addictive Disorder PRTFs

A. - A.2.a.iii.(c). ...

b. The clinical director is responsible for the following:

i. providing a monthly minimum of one hour of on-site clinical direction per resident;

(a). the governing body may delegate some or all of this responsibility to another physician(s) who meets the qualifications of a clinical director); and

ii. ...

3. LMHPs, MHPs and MHSs. The PRTF shall provide or make available adequate numbers of LMHPs, MHPs and MHSs to care for its residents. There shall be at least one LMHP or MHP supervisor on duty at least 40 hours/week during normal business hours at the facility and as required by the treatment plan. When not on duty at the facility, there shall be a LMHP or MHP on call. The PRTF shall develop a policy to determine the number of LHMPs, MHPs, MHSs on duty and the ratio of LHMPs and MHPs to MHSs based on the needs of its residents.

A.3.a. - B. ...

AUTHORITY NOTE: Promulgated in accordance with R.S. 36:254 and R.S. 40:2009.

HISTORICAL NOTE: Promulgated by the Department of Health and Hospitals, Bureau of Health Services Financing, LR 38:339 (February 2012), amended LR 38:

Interested persons may submit written comments to J. Ruth Kennedy, Bureau of Health Services Financing, P.O. Box 91030, Baton Rouge, LA 70821-9030. She is responsible for responding to inquiries regarding this Emergency Rule. A copy of this Emergency Rule is available for review by interested parties at parish Medicaid offices.

Bruce D. Greenstein
Secretary

1208#099

DECLARATION OF EMERGENCY

Department of Health and Hospitals
Bureau of Heatlh Services Financing

Rural Health Clinics—Fluoride Varnish Applications
(LAC 50:XI.16301 and 16701)

The Department of Health and Hospitals, Bureau of Health Services Financing amends LAC 50:XI.16301 and §16701 in the Medical Assistance Program as authorized by R.S. 36:254 and pursuant to Title XIX of the Social Security Act. This Emergency Rule is promulgated in accordance with the provisions of the Administrative Procedure Act, R.S. 49:953(B)(1) et seq., and shall be in effect for the maximum period allowed under the Act or until adoption of the final Rule, whichever occurs first.

The Department of Health and Hospitals, Bureau of Health Services Financing amended the provisions governing rural health clinics (RHCs) to provide Medicaid reimbursement for diabetes self-management training services and to reorganize the existing provisions governing provider participation and services in a more clear and concise manner in the *Louisiana Administrative Code* (*Louisiana Register*, Volume 37, Number 9). The department promulgated an Emergency Rule which amended the September 20, 2011 Rule to adopt provisions for the coverage of fluoride varnish application services rendered to Medicaid recipients (*Louisiana Register*, Volume 37, Number 11). The department promulgated an Emergency Rule which amended the December 1, 2011 Emergency Rule to clarify the provisions governing the scope of services for fluoride varnish applications (*Louisiana Register*, Volume 38, Number 1). This Emergency Rule is being promulgated to continue the provisions of the January 20, 2012

Emergency Rule. This action is being taken to promote the health and welfare of Medicaid recipients.

Effective September 18, 2012, the Department of Health and Hospitals, Bureau of Health Services Financing amends the provisions governing rural health clinics.

Title 50

PUBLIC HEALTH—MEDICAL ASSISTANCE

Part XI. Clinic Services

Subpart 15. Rural Health Clinics

Chapter 163. Services

§16301. Scope of Services

A. - B.1. ...

C. Effective December 1, 2011, the department shall provide coverage for fluoride varnish applications performed in the RHC. This service shall be limited to recipients from six months through five years of age. Fluoride varnish applications may be covered once every six months per Medicaid recipient.

1. Fluoride varnish applications shall be reimbursed when performed in the RHC by:

a. the appropriate dental providers;

b. physicians;

c. physician assistants;

d. nurse practitioners;

e. registered nurses; or

f. licensed practical nurses.

2. All participating staff shall review the *Smiles for Life* training module for fluoride varnish and successfully pass the post assessment. All staff involved in the varnish application must be deemed as competent to perform the service by the RHC.

AUTHORITY NOTE: Promulgated in accordance with R.S. 36:254 and Title XIX of the Social Security Act.

HISTORICAL NOTE: Promulgated by the Department of Health and Hospitals, Office of the Secretary, Bureau of Health Services Financing, LR 32:1904 (October 2006), repromulgated LR 32:2267 (December 2006), amended by the Department of Health and Hospitals, Bureau of Health Services Financing, LR 37:2631 (September 2011), LR 38:

Chapter 167. Reimbursement Methodology

§16701. Prospective Payment System

A. - B.3.a. …

4. Effective for dates of service on or after December 1, 2011, the Medicaid Program shall include coverage for fluoride varnish applications in the RHC encounter rate.

a. Fluoride varnish applications shall only be reimbursed to the RHC when performed on the same date of service as an office visit or preventative screening. Separate encounters for fluoride varnish services are not permitted and the application of fluoride varnish does not constitute an encounter visit.

C. - D. …

AUTHORITY NOTE: Promulgated in accordance with R.S. 36:254 and Title XIX of the Social Security Act.

HISTORICAL NOTE: Promulgated by the Department of Health and Hospitals, Office of the Secretary, Bureau of Health Services Financing, LR 32:1905 (October 2006), repromulgated LR 32:2267 (December 2006), amended by the Department of Health and Hospitals, Bureau of Health Services Financing, LR 37:2632 (September 2011), LR 38:

Implementation of the provisions of this Rule may be contingent upon the approval of the U.S. Department of Health and Human Services, Centers for Medicare and Medicaid Services (CMS), if it is determined that submission to CMS for review and approval is required.

Interested persons may submit written comments to J. Ruth Kennedy, Bureau of Health Services Financing, P.O. Box 91030, Baton Rouge, LA 70821-9030. She is responsible for responding to inquiries regarding this Emergency Rule. A copy of this Emergency Rule is available for review by interested parties at parish Medicaid offices.

Bruce D. Greenstein
Secretary

1208#111

DECLARATION OF EMERGENCY

Department of Wildlife and Fisheries
Wildlife and Fisheries Commission

2012 Fall Shrimp Season Opening

In accordance with the emergency provisions of R.S. 49:953 of the Administrative Procedure Act which allows the Wildlife and Fisheries Commission to use emergency procedures to set shrimp seasons and R.S. 56:497 which provides that the Wildlife and Fisheries Commission shall fix no less than two open seasons each year for all or parts of state inside waters and shall have the authority to open or close state outside waters, the Wildlife and Fisheries Commission does hereby set the 2012 Fall Shrimp Season in inside waters to open as follows:

All Louisiana inside waters from the Mississippi-Louisiana state line to the Louisiana-Texas state line, shall open at 6 p.m. August 13, 2012 except for those inside waters from the western shore of the Atchafalaya River and the Atchafalaya River Ship Channel out to Eugene Island as described by the inside-outside shrimp line in R.S. 56:495 westward to the Louisiana/Texas state line which shall open at 6 a.m. August 13, 2012.

The commission grants authority to the Secretary of the Department of Wildlife and Fisheries to close the fall shrimp season when biological and technical data indicate the need to do so or if enforcement problems develop; and, to close and reopen all or parts of state inside and outside waters if significant numbers of small white shrimp are found in these waters; and, to open and close special shrimp seasons in any portion of state inside waters where such a season would not detrimentally impact developing brown shrimp populations following notification to the Chair of the Wildlife and Fisheries Commission.

Ann L. Taylor
Chairman

1208#049

DECLARATION OF EMERGENCY

Department of Wildlife and Fisheries
Wildlife and Fisheries Commission

2012 Oyster Season on Public Oyster Seed Grounds

In accordance with the emergency provisions of the Administrative Procedure Act, Louisiana Revised Statutes (R.S.) 49:953, and under the authority of R.S. 56:433, R.S. 56:435.1, and R.S. 56:435.1.1(D) notice is hereby given that the Secretary of the Department of Wildlife and Fisheries and the Wildlife and Fisheries Commission hereby declare the 2012/2013 oyster season as follows:

The Little Lake Public Oyster Seed Grounds as described in Louisiana Administrative Code (LAC) 76:VII:521, and the Vermilion/East and West Cote Blanche Bay/Atchafalaya Bay Public Oyster Seed Grounds as described in LAC 76:VII:507 and 76:VII:509 and shall open one-half hour before sunrise on Wednesday, September 5, 2012.

All remaining public oyster seed grounds and reservations, as described in R.S. 56:434, LAC 76:VII.511, LAC 76:VII.513, and LAC 76:VII.517, shall open at one-half hour before sunrise on Monday, October 29, 2012, except for the Bay Gardene and Sister Lake Public Oyster Seed Reservations which shall remain closed. That portion of the public oyster seed grounds east of the Mississippi River, south of the Mississippi River Gulf Outlet (MRGO), and east of a line running generally from California Point northeast to Point Garnder shall be restricted to the harvest of market sacks only and no seed oyster harvest shall be allowed.

The oyster season in west cove portion of the Calcasieu Lake public oyster area, as described in R.S. 56:435.1.1, shall open one-half hour before sunrise on Thursday, November 1, 2012. The sack limit for west cove portion of Calcasieu Lake is set at 10 sacks per person per vessel per day as provided for in R.S. 56:435.1.1. However, these conservation actions shall not supersede public health closures.

The following areas shall remain closed for the entire 2012/2013 oyster season:

1. The Bay Gardene Public Oyster Seed Reservation;
2. The Sister Lake Public Oyster Seed Reservation, including the 2012 cultch plant;
3. The east side of the Calcasieu Lake public oyster area;
4. Sabine Lake Public Oyster Area (as described in R.S. 56:435.1);
5. The 2011 and 2012 cultch plants within the following coordinates:

Mississippi Sound (2011)—St. Bernard Parish

A. 30 degrees 07 minutes 17.56 seconds N
89 degrees 27 minutes 52.39 seconds W
B. 30 degrees 07 minutes 26.94 seconds N
89 degrees 27 minutes 36.20 seconds W
C. 30 degrees 07 minutes 07.11 seconds N
89 degrees 26 minutes 45.48 seconds W
D. 30 degrees 06 minutes 40.93 seconds N
89 degrees 27 minutes 14.09 seconds W

California Bay (2011)—Plaquemines Parish

A. 29 degrees 30 minutes 40.42 seconds N
89 degrees 34 minutes 03.19 seconds W
B. 29 degrees 30 minutes 27.18 seconds N
89 degrees 33 minutes 21.85 seconds W
C. 29 degrees 29 minutes 54.99 seconds N
89 degrees 33 minutes 20.24 seconds W
D. 29 degrees 30 minutes 02.74 seconds N
89 degrees 34 minutes 03.93 seconds W

Hackberry Bay (2012)—Lafourche Parish

A. 29 degrees 25 minutes 21.16 seconds N
90 degrees 02 minutes 59.53 seconds W
B. 29 degrees 24 minutes 58.30 seconds N
90 degrees 02 minutes 51.34 seconds W
C. 29 degrees 24 minutes 29.25 seconds N
90 degrees 03 minutes 24.92 seconds W
D. 29 degrees 24 minutes 45.37 seconds N
90 degrees 03 minutes 35.33 seconds W

The Secretary of the Department of Wildlife and Fisheries is authorized to take emergency action as necessary to close areas if oyster mortalities are occurring or to delay the season or close areas where significant spat catch has occurred with good probability of survival, or where it is found that there are excessive amounts of non-living reef material in seed oyster loads, or if oyster resources and/or reefs are being adversely impacted, or if enforcement problems are encountered. The secretary shall notify the Chairman of the Wildlife and Fisheries Commission of his intention to close an area.

The secretary is authorized to take emergency action to reopen areas previously closed if the threat to the resource has ended, or may open areas if substantial oyster resources are located.

Notice of any opening, delaying or closing of a season will be made by public notice at least 72 hours prior to such action unless such closure is ordered by the Louisiana Department of Health and Hospitals for public health concerns.

Ann L. Taylor
Chairman

1208#050

DECLARATION OF EMERGENCY

Department of Wildlife and Fisheries
Wildlife and Fisheries Commission

2012-2013 Waterfowl Season Dates

In accordance with the emergency provisions of R.S. 49:953 of the Administrative Procedure Act, and under the authority of R.S. 56:115, the Secretary of the Department of Wildlife and Fisheries and the Wildlife and Fisheries Commission hereby adopts the following emergency rule.

The hunting season for ducks, coots and geese during the 2012-2013 hunting season shall be as follows:

Ducks And Coots: 60 days

Coastal Zone:	November 10 - Dec. 2
	December 15 – January 20
West Zone:	November 10 – December 9
	December 22 - January 20
East Zone:	November 17 - December 2
(Including Catahoula Lake)	December 15 - January 27

Youth Waterfowl Weekend - November 3-4 in the Coastal Zone and West Zone, November 10-11 in East Zone

Daily Bag Limits: The daily bag limit on ducks is 6 and may include no more than 4 mallards (no more than 2 of which may be females), 1 canvasback, 1 mottled duck, 1 black duck, 3 wood ducks, 4 scaup, 2 redheads, and 2 pintails.

Daily bag limit on coots is 15.

Mergansers - The daily bag limit for mergansers is 5, only 2 of which may be hooded mergansers. Merganser limits are in addition to the daily bag limit for ducks.

Possession Limit - The possession limit on ducks, coots and mergansers is twice the daily bag limit.

Geese:

Light Geese (Snow, Blue And Ross') And White-Fronted Geese

Coastal Zone:	November 10 - December 2
(74 days)	December 15 - February 3
West Zone:	November 10 - December 9
(74 days)	December 22 - February 3
East Zone:	November 3 - December 2
(74 days)	December 15 - January 27

Daily bag limit on light geese (snow, blue and Ross'): 20

Possession limit on light geese (snow, blue and Ross'): None

Daily Limit on white-fronted geese: 2

Possession Limit on white-fronted geese: 4

NOTE: During the open Canada goose season, the daily bag limit is 3 dark geese (White-fronted and Canada) no more than 2 of which may be White-fronted geese.

Canada Geese: Closed In The Area Described Below

Coastal Zone:	November 10 - December 2
(71 days)	December 15 - January 31
West Zone:	November 10 - December 9
(71 days)	December 22 - January 31
East Zone:	November 3 - December 2
(74 days)	December 15 - January 27

Daily Limit on Canada geese: 3 in aggregate with White-fronts

Possession limit on Canada geese: 6 in aggregate with White-fronts

NOTE: During the open Canada goose season, the daily bag limit is 3 dark geese (White-fronted and Canada) no more than 2 of which may be White-fronted geese.

The Canada goose Season will be open statewide except for a portion of southwest Louisiana. The closed area is described as follows: Beginning at the Texas State Line, proceeding east along Hwy. 82 to the Calcasieu Ship Channel, then north along the Calcasieu Ship Channel to its junction with the Intracoastal Canal, then east along the Intracoastal Canal to its juncture with LA Hwy. 82, then south along LA Hwy. 82 to its juncture with Parish Road 3147, then south and east along Parish Road 3147 to Freshwater Bayou Canal, then south to the Gulf of Mexico, then west along the shoreline of the Gulf of Mexico to the Texas State Line, then north to the point of beginning at LA Hwy. 82.

Conservation Order For Light Geese (Snow, Blue And Ross's):

Coastal Zone:	December 3 - December 14
	February 4 - March 9
West Zone:	December 10 - December 21
	February 4 - March 9
East Zone:	December 3 - December 14
	January 28 - March 9

Only snow, blue and Ross's geese may be taken under the terms of the Conservation Order, which allows the use of electronic calls and unplugged shotguns and eliminates the daily bag and possession limits. During the Conservation Order, shooting hours begins one-half hour before sunrise and extends until one-half hour after sunset.

Rails: November 10 – January 2

King And Clapper: Daily bag limit 15 in the aggregate, Possession 30.

Sora And Virginia: Daily bag and possession 25 in the aggregate.

Gallinules: November 10 - January 2

Daily bag limit 15, Possession limit 30

Snipe:

Coastal Zone:	November 3 - December 3
	December 15 - February 28
West Zone:	November 3 - December 10
	December 22 - February 28
East Zone:	November 3 - December 3
	December 15 - February 28

Daily bag limit 8, Possession limit 16

Shooting Hours: One-half hour before sunrise to sunset, except at the Spanish Lake Recreation Area in Iberia Parish where shooting hours, including the Conservation Order, end at 2 p.m.

Extended Falconry Seasons For Ducks, Rails And Gallinules:

STATEWIDE: November 3 - February 1

(16 days of the total season lengths for rails, gallinules and extended falconry seasons were used during the September teal season.)

A Declaration of Emergency is necessary because the U.S. Fish and Wildlife Service establishes the framework for all migratory species. In order for Louisiana to provide hunting opportunities to the 200,000 sportsmen, selection of season dates, bag limits and shooting hours must be established and presented to the U.S. Fish and Wildlife Service immediately.

The aforementioned season dates, bag limits and shooting hours will become effective November 1, 2012 and extend through one-half hour after sunset on March 9, 2013.

Ann L. Taylor
Chairman

1208#051

DECLARATION OF EMERGENCY

Department of Wildlife and Fisheries
Wildlife and Fisheries Commission

Additional Spring Inshore Shrimp Season Closure

In accordance with the emergency provisions of R.S. 49:953 of the Administrative Procedure Act which allows the Wildlife and Fisheries Commission to use emergency procedures to set shrimp seasons and R.S. 56:497 which provides that the Wildlife and Fisheries Commission shall fix no less than two open seasons each year for all or part of inside waters and a Declaration of Emergency adopted by the Wildlife and Fisheries Commission on May 3, 2012

which authorized the Secretary of the Department of Wildlife and Fisheries to close the 2012 Spring Inshore Shrimp Season in any portion of Louisiana's inside waters to protect small white shrimp if biological and technical data indicate the need to do so, or enforcement problems develop, the Secretary hereby declares:

The 2012 spring inshore shrimp season in state inside waters in Lake Pontchartrain, Rigolets Pass, Chef Menteur Pass, the Mississippi River Gulf Outlet (MRGO), that part of Lake Borgne seaward of a line extending one-half mile from the shoreline; and that portion of Mississippi Sound beginning at a point on the Louisiana-Mississippi Lateral Boundary at 30 degrees 09 minutes 39.6 seconds north latitude and 89 degrees 30 minutes 00.0 seconds west longitude; thence due south to a point at 30 degrees 05 minutes 00.0 seconds north latitude and 89 degrees 30 minutes 00.0 seconds west longitude; thence southeasterly to a point on the western shore of Three-Mile Pass at 30 degrees 03 minutes 00.0 seconds north latitude and 89 degrees 22 minutes 23.0 seconds west longitude; thence northeasterly to a point on Isle Au Pitre at 30 degrees 09 minutes 20.5 seconds north latitude and 89 degrees 11 minutes 15.5 seconds west longitude, which is a point on the double–rig line as described in R.S. 56:495.1(A)2; thence northerly along the double–rig line to a point on the Louisiana-Mississippi Lateral Boundary at 30 degrees 12 minutes 37.9056 seconds north latitude and 89 degrees 10 minutes 57.9725 seconds west longitude; thence westerly along the Louisiana-Mississippi Lateral Boundary to the point of beginning; and, the open waters of Breton and Chandeleur Sounds as described by the double-rig line will close on July 14, 2012 at 6:00 a.m.

Effective with this closure all state inside waters will be closed to shrimping except for the open waters of Breton and Chandeleur Sounds as described by the double-rig line in R.S. 56:495.1(A)2.

In addition, all state outside waters seaward of the Inside/Outside Shrimp Line as described in R.S. 56:495(A) will remain open to shrimping except for those areas closed to recreational and commercial fishing due to the Deepwater Horizon drilling rig accident.

The number, distribution and percentage of small juvenile white shrimp taken in biological samples have rapidly increased in recent weeks and these waters are being closed to protect developing shrimp populations.

Robert J. Barham
Secretary

1208#012

DECLARATION OF EMERGENCY

Department of Wildlife and Fisheries
Wildlife and Fisheries Commission

Fisheries Closure Due to Oil Spill

In accordance with the emergency provisions of R.S. 49:953 of the Administrative Procedure Act, and under the authority of R.S. 56:6.1, the Wildlife and Fisheries Commission hereby closes all commercial fishing, effective immediately August 2, 2012 in the following areas:

Those waters north of 28 degrees 56 minutes 30 seconds north latitude and south of 28 degrees 59 minutes 30 seconds north latitude from the eastern shore of Southwest Pass of the Mississippi River eastward to a line beginning at 28 degrees 59 minutes 30 seconds north latitude and 89 degrees 19 minutes 50 seconds west longitude and ending at 28 degrees 56 minutes 30 seconds north latitude and 89 degrees 23 minutes 00 seconds west longitude, and those waters north of 29 degrees 02 minutes 00 seconds north latitude and south of 29 degrees 02 minutes 20 seconds north latitude from the western shore of South Pass of the Mississippi River westward to 89 degrees 15 minutes 25 seconds west longitude, and those waters north of 28 degrees 59 minutes 40 seconds north latitude and south of 29 degrees 02 minutes 00 seconds north latitude from the western shore of South Pass of the Mississippi River westward to 89 degrees 15 minutes 25 seconds west longitude and southeastward along a line beginning at 29 degrees 02 minutes 00 seconds north latitude and 89 degrees 15 minutes 25 seconds west longitude and ending at 28 degrees 59 minutes 40 seconds north latitude and 89 degrees 10 minutes 15 seconds west longitude, and those waters west of the western shore of South Pass of the Mississippi River south of 28 degrees 59 minutes 40 seconds north latitude bounded by the following coordinates: 1) 28 degrees 59 minutes 15 seconds north latitude and 89 degrees 08 minutes 15 seconds west longitude, 2) 28 degrees 58 minutes 20 seconds north latitude and 89 degrees 10 minutes 00 seconds west longitude, 3) 28 degrees 59 minutes 01 seconds north latitude and 89 degrees 11 minutes 00 seconds west longitude, 4) 28 degrees 59 minutes 40 seconds north latitude and 89 degrees 10 minutes 15 seconds west longitude, and those waters east of the eastern shore of South Pass of the Mississippi River and south of 29 degrees 01 minutes 50 seconds north latitude eastward to a line beginning at 29 degrees 01 minutes 50 seconds north latitude and 89 degrees 07 minutes 20 seconds west longitude and ending at 28 degrees 59 minutes 35 seconds north latitude and 89 degrees 08 minutes 00 seconds west longitude, and those waters adjacent to but not including Northeast Pass and Southeast Pass of the Mississippi River and bounded by the following coordinates: 1) 29 degrees 08 minutes 35 seconds north latitude and 89 degrees 04 minutes 20 seconds west longitude, 2) 29 degrees 08 minutes 15 seconds north latitude and 89 degrees 02 minutes 10 seconds west longitude, 3) 29 degrees 04 minutes 50 seconds north latitude and 89 degrees 04 minutes 10 seconds west longitude, 4) 29 degrees 05 minutes 30 seconds north latitude and 89 degrees 05 minutes 10 seconds west longitude, and those waters south and west of Pass a Loutre of the Mississippi River and east of 89 degrees 05 minutes 35 seconds west longitude bounded by the following coordinates: 1) 29 degrees 11 minutes 25 seconds north latitude and 89 degrees 03 minutes 30 seconds west longitude, 2) 29 degrees 11 minutes 00 seconds north latitude and 89 degrees 02 minutes 25 seconds west longitude, 3) 29 degrees 09 minutes 00 seconds north latitude and 89 degrees 05 minutes 35 seconds west longitude, 4) 29 degrees 11 minutes 00 seconds north latitude and 89 degrees 05 minutes 35 seconds west longitude, and those waters south of North Pass of the Mississippi River bounded by the following coordinates: 1)

29 degrees 11 minutes 35 seconds north latitude and 89 degrees 02 minutes 55 seconds west longitude, 2) 29 degrees 12 minutes 35 seconds north latitude and 89 degrees 01 minutes 05 seconds west longitude, 3) 29 degrees 11 minutes 35 seconds north latitude and 89 degrees 01 minutes 10 seconds west longitude, 4) 29 degrees 11 minutes 10 seconds north latitude and 89 degrees 02 minutes 00 seconds west longitude, and those state inside and outside waters adjacent to Grand Terre Island bounded by the following coordinates: 1) 29 degrees 18 minutes 20 seconds north latitude and 89 degrees 54 minutes 50 seconds west longitude, 2) 29 degrees 17 minutes 10 seconds north latitude and 89 degrees 53 minutes 50 seconds west longitude, 3) 29 degrees 15 minutes 40 seconds north latitude and 89 degrees 56 minutes 00 seconds west longitude, 4) 29 degrees 17 minutes 00 seconds north latitude and 89 degrees 57 minutes 20 seconds west longitude, and those state inside waters in the upper Barataria Basin north of 29 degrees 26 minutes 00 seconds north latitude and south of 29 degrees 29 minutes 00 seconds north latitude from 89 degrees 50 minutes 00 seconds west longitude westward to 89 degrees 57 minutes 00 seconds west longitude.

Recreational fishing is open in all state inside and outside territorial waters, except in the following areas, where only recreational angling and charter boat angling is allowed: those state inside and outside waters adjacent to Grand Terre Island bounded by the following coordinates: 1) 29 degrees 18 minutes 20 seconds north latitude and 89 degrees 54 minutes 50 seconds west longitude, 2) 29 degrees 17 minutes 10 seconds north latitude and 89 degrees 53 minutes 50 seconds west longitude, 3) 29 degrees 15 minutes 40 seconds north latitude and 89 degrees 56 minutes 00 seconds west longitude, 4) 29 degrees 17 minutes 00 seconds north latitude and 89 degrees 57 minutes 20 seconds west longitude, and those state inside waters in the upper Barataria Basin north of 29 degrees 26 minutes 00 seconds north latitude and south of 29 degrees 29 minutes 00 seconds north latitude from 89 degrees 50 minutes 00 seconds west longitude westward to 89 degrees 57 minutes 00 seconds west longitude.

The Deepwater Horizon drilling rig accident has resulted in a significant release of hydrocarbon pollutants into the waters offshore of southeast Louisiana and these pollutants have the potential to impact fish and other aquatic life in portions of these coastal waters. Efforts have been made and are continuing to be made to minimize the potential threats to fish and other aquatic life.

The Commission hereby grants authority to the Secretary of the Department of Wildlife and Fisheries to open, close, reopen-reclose, broaden or otherwise modify the areas closed and opened to fishing if biological, environmental and technical data indicate the need to do so, or as needed to effectively implement the provisions herein upon notification to the Chairman of the Wildlife and Fisheries Commission.

Ann L. Taylor
Chairman

1208#052

Rules

RULE

Department of Civil Service
Board of Ethics

Food and Drink Limit (LAC 52:I.1703)

In accordance with the provisions of the Administrative Procedure Act, R.S. 49:950 et seq., the Department of Civil Service, Louisiana Board of Ethics, has amended rules for the Board of Ethics to bring the rules into compliance with current statutory provisions and section 1115.1C of the Code of Governmental Ethics.

Title 52
ETHICS
Part I. Board of Ethics
Chapter 17. Code of Governmental Ethics
§1703. Food and Drink Limit

A. In accordance with R.S. 42:1115.1(C), beginning on July 1, 2012, the limit for food, drink or refreshments provided in R.S. 42:1115.1A and B is $56.

AUTHORITY NOTE: Promulgated in accordance with R.S. 42:1115.1.

HISTORICAL NOTE: Promulgated by the Department of Civil Service, Board of Ethics, LR 36:304 (February 2010), amended LR 36:1466 (July 2010), LR 38:1951 (August 2012).

Kathleen M. Allen
Ethics Administrator

1208#060

RULE

Board of Elementary and Secondary Education

Bulletin 746—Louisiana Standards for State Certification of School Personnel—Standard Teaching Authorizations (LAC 28:CXXXI.303, 305, 311, 313, and 315)

In accordance with R.S. 49:950 et seq., the Administrative Procedure Act, the Board of Elementary and Secondary Education has amended *Bulletin 746—Louisiana Standards for State Certification of School Personnel:* §303. Introduction, §305. Professional Level Certificates, §311. World Language Certificate (WLC) PK-12—Valid for Six Years and Renewable with CLUs, §313. Practitioner Licenses, and §315. Standard Certificates for Teachers in Nonpublic Schools. The policy revisions align the certification of school personnel with Act 54 of the 2010 Regular Legislative Session. The revisions require that teachers meet the standards of effectiveness mandated by Act 54 in order to obtain a higher level certificate or to renew a Level 2, Level 3, or World Language Certificate (WLC). This policy change will also eliminate the Practitioner 4 License since that alternate certification program no longer exists; additionally this policy change will require teachers moving from a nonpublic school to a public/charter school to meet the same standards of effectiveness upon their move to the public/charter school system. During the 2010 Regular Legislative Session new regulations were passed for the evaluation of teachers in all public school systems. This new policy eliminated the LaTAAP program that had been in place since 1994.

Title 28
EDUCATION
Part CXXXI. Bulletin 746—Louisiana Standards for State Certification of School Personnel
Chapter 3. Teaching Authorizations and Certifications
Subchapter A. Standard Teaching Authorizations

Editor's Note: The name of the Division of Student Standards and Assessments has been changed to The Division of Student Standards, Assessments, and Accountability.

§303. Introduction

A. There are eight types of standard teaching authorizations issued by the state of Louisiana:

1. - 4. ...
5. practitioner 1, 2, and 3 licenses;
6. world language certificates (WLC);
7. Extended Endorsement License (EEL); and
8. standard certificates for teachers in non-public schools;

B. ...

AUTHORITY NOTE: Promulgated in accordance with R.S. 17:6(A)(10), (11), and (15), R.S. 17:7(6), R.S. 17:10, R.S. 17:22(6), R.S. 17:391.1-391.10, and R.S. 17:411.

HISTORICAL NOTE: Promulgated by the Board of Elementary and Secondary Education, LR 32:1797 (October 2006), amended LR 37:558 (February 2011), LR 38:1951 (August 2012).

§305. Professional Level Certificates

A. Level 1 is the entry-level professional certificate, valid for three years. The Level 2 and Level 3 certificates are valid for five years.

1. - 1.d.i.(c). ...

B. Level 2 Professional Certificate—valid for five years.

1. - 1.a. ...

b. successfully meet the standards of effectiveness for three years pursuant to Bulletin 130 and mandated by Act 54 of the Louisiana 2010 Legislative Session; and

1.c. - 3. ...

C. Level 3 Professional Certificate—valid for five years.

1. - 3. ...

D. Renewal/Extension Guidelines for Level 1, Level 2, and Level 3 Certificates

1. Level 1 Certificate

a. Valid for three years initially and may be extended thereafter for a period of one year at the request of a Louisiana employing authority. Level 1 certificates are limited to two such extensions. Candidates must successfully meet the standards of effectiveness for the renewal of this certificate pursuant to Bulletin 130 and mandated by Act 54 of the Louisiana 2010 Legislative Session.

2. Level 2 and Level 3 Certificates

a. Valid for five years initially and may be renewed thereafter for a period of five years at the request of a Louisiana Employing Authority. For renewal of Level 2 and

Level 3 certificates, candidates must successfully meet the standards of effectiveness for at least three years during the five-year initial or renewal period pursuant to Bulletin 130 and mandated by Act 54 of the Louisiana 2010 Legislative Session.

E. - E.3. ...

AUTHORITY NOTE: Promulgated in accordance with R.S. 17:6(A)(10), (11), and (15), R.S. 17:7(6), R.S. 17:10, R.S. 17:22(6), R.S. 17:391.1-391.10, and R.S. 17:411.

HISTORICAL NOTE: Promulgated by the Board of Elementary and Secondary Education, LR 32:1797 (October 2006), amended LR 33:433 (March 2007), LR 34:233 (February 2008), LR 34:1611 (August 2008), LR 35:222 (February 2009), LR 37:558 (February 2011), and LR 38:1951 (August 2012).

§311. World Language Certificate (WLC) PK-12

A. This certificate is valid for six years and may be issued to a foreign associate teacher who participates in the Department of Education (LDE) Foreign Associate Teacher Program, and who teaches world language and/or immersion in grades PK-12.

B. - C.4. ...

D. Renewal Guidelines. Valid for six years initially and may be renewed thereafter for a period of six years at the request of a Louisiana employing authority. For renewal of a WLC certificate, candidates must successfully meet the standards of effectiveness for at least three years during the six-year initial or renewal period pursuant to Bulletin 130 and mandated by Act 54 of the Louisiana 2010 Legislative Session.

E. ...

AUTHORITY NOTE: Promulgated in accordance with R.S. 17:6 (A)(10), (11), and (15), R.S. 17:7(6), R.S. 17:10, R.S. 17:22(6), R.S. 17:391.1-391.10, and R.S. 17:411.

HISTORICAL NOTE: Promulgated by the Board of Elementary and Secondary Education, LR 32:1800 (October 2006), amended LR 33:1618 (August 2007), LR 34:233 (February 2008), LR 35:642 (April 2009), LR 36:486 (March 2010), LR 38:1952 (August 2012).

§313. Practitioner Licenses

A. Practitioner Licenses 1 and 2 may be issued for one school year, renewed annually, and held a maximum of three years while the holder completes an alternate program. Upon completion of the three years of employment on this certificate, the holder must fulfill guidelines for a Level 1 or higher-level certificate for continued employment in a Louisiana school system. The Practitioner License 3 may be issued for one school year, renewed annually, and held a maximum of four years while the holder completes an alternate program. Upon completion of the four years of employment on this certificate, the holder must fulfill guidelines for a Level 1 or higher-level certificate for continued employment in a Louisiana school system.

B. - D.4. ...

AUTHORITY NOTE: Promulgated in accordance with R.S. 17:6 (A)(10), (11), and (15), R.S. 17:7(6), R.S. 17:10, R.S. 17:22(6), R.S. 17:391.1-391.10, and R.S. 17:411.

HISTORICAL NOTE: Promulgated by the Board of Elementary and Secondary Education, LR 32:1800 (October 2006), amended LR 35:221 (February 2009), LR 38:1952 (August 2012).

§315. Standard Certificates for Teachers in Nonpublic Schools

A. A standard certificate with an asterisk (*) following the certificate type is issued to a teacher in a non-public school. The asterisk (*) refers to a statement printed at the bottom of the certificate: "If this teacher enters a public/charter school system in Louisiana, he/she will be required to meet the standards of effectiveness pursuant to Bulletin 130 and mandated by Act 54 of the Louisiana 2010 Legislative Session for issuance of a Level 2 or Level 3 teaching certificate."

B. - C.4.b. ...

c. If the holder of an expired Level 2* or Level 3* certificate has not earned the required 150 CLUs of professional development, the expired certificate may be reactivated upon request of the employing authority (at the level that was attained prior to expiration) for a period of one year, during which time the certificate holder must present evidence of successful completion of the required 150 CLUs to the Louisiana Department of Education. Failure to complete necessary CLUs during the one year reactivation period will result in an expired certificate that cannot be reinstated until evidence is provided of completed professional development requirements.

C.4.d. - F.1. ...

2. If the holder of an expired Level 2* or Level 3* certificate has not earned the required 150 CLUs of professional development, the expired certificate may be reactivated upon request of the Louisiana employing authority (at the level that was attained prior to expiration) for a period of one year, during which time the certificate holder must present evidence of successful completion of the required 150 CLUs to the Louisiana Department of Education. Failure to complete necessary CLUs during the one year reactivation period will result in an expired certificate that cannot be reinstated until evidence is provided of completed professional development requirements.

3. A continuing learning unit (CLU) is a professional development activity that builds capacity for effective, research-based, content-focused teaching and learning that positively impacts student achievement. As a unit of measure, the CLU is used to quantify an educator's participation in a district- or system-approved, content-focused professional development activity aligned with the educator's individual professional growth plan.

a. Educators may earn one CLU for each clock hour of active engagement in a high quality professional development activity approved by the employing authority. Each educator is responsible for maintaining required documentation and for reporting earned CLUs in a manner prescribed by the employing authority. Earned CLUs transfer across local education agencies (LEAs).

b. An educator who holds a Level 2* or Level 3* professional license is responsible for maintaining documentation regarding acquisition of 150 CLUs for purposes of renewal and for completing the necessary paperwork every five years to renew his/her license. Upon submission of the renewal application to the state, the employing authority must provide an assurance statement signed by the superintendent or his/her designee, with the required listing of earned CLUs as documented by the educator seeking licensure.

G. Reinstating Lapsed Levels 2* or 3*, Types B* or A* Certificates

1. If the holder of a Level 2*, Level 3*, Type B*, or Type A* certificate allows a period of five consecutive

calendar years to pass in which he/she is not a regularly employed teacher for at least one semester, or 90 consecutive days, the certificate will lapse for disuse.

2. To reinstate a lapsed certificate, the holder must present evidence that he/she earned six semester hours of credit in state-approved courses (see Chapter 13) during the five year period immediately preceding request for reinstatement.

3. If the holder did not earn six semester hours or equivalent, the lapsed certificate may be reactivated upon request (at the level that was attained prior to disuse) for a period of one year, during which time the holder must complete reinstatement requirements.

AUTHORITY NOTE: Promulgated in accordance with R.S. 17:6 (A)(10), (11), and (15), R.S. 17:7(6), R.S. 17:10, R.S. 17:22(6), R.S. 17:391.1-391.10, and R.S. 17:411.

HISTORICAL NOTE: Promulgated by the Board of Elementary and Secondary Education, LR 32:1801 (October 2006), amended LR 36:752 (April 2010), LR 37:559 (February 2011), LR 38:1952 (August 2012).

Catherine R. Pozniak
Executive Director

1208#027

RULE

Student Financial Assistance Commission
Office of Student Financial Assistance

Scholarship/Grant Programs—Nontraditional Students
(LAC 28:IV.1205)

The Louisiana Student Financial Assistance Commission (LASFAC) has amended its Scholarship/Grant rules (R.S. 17:3021-3025, R.S. 3041.10-3041.15, R.S. 17:3042.1, R.S. 17:3048.1, R.S. 17:3048.5 and R.S. 17:3048.6). (SG12138R)

Title 28
EDUCATION
Part IV. Student Financial Assistance—Higher Education Scholarship and Grant Programs
Chapter 12. Louisiana GO Grant
§1205. Application and Initial Eligibility

A. - B.3. …

4.a. be a first time freshman who entered college during the 2007-2008 academic year or later; or

b. have entered college as a first time freshman during the 2007-2008 academic year or later and have become eligible for a federal Pell Grant or a financial need grant after the freshman year; or

c. be age 25 or older.

C. ...

AUTHORITY NOTE: Promulgated in accordance with R.S. 17:3021-3023 and R.S. 17:3046 et seq.

HISTORICAL NOTE: Promulgated by the Student Financial Assistance Commission, Office of Student Financial Assistance, LR 33:2616 (December 2007), amended LR 34:238 (February 2008), LR 35:2349 (November 2009), LR 36:2853 (December 2010, LR 37:1389 (May 2011), LR 38:1953 (August 2012).

George Badge Eldredge
General Counsel

1208#002

RULE

Student Financial Assistance Commission
Office of Student Financial Assistance

Scholarship/Grant Programs—Summer Sessions
(LAC 28:IV.301)

The Louisiana Student Financial Assistance Commission (LASFAC) has amended its Scholarship/Grant rules (R.S. 17:3021-3025, R.S. 3041.10-3041.15, R.S. 17:3042.1, R.S. 17:3048.1, R.S. 17:3048.5 and R.S. 17:3048.6). (SG12139R)

Title 28
EDUCATION
Part IV. Student Financial Assistance—Higher Education Scholarship and Grant Programs
Chapter 3. Definitions
§301. Definitions

A. Words and terms not otherwise defined in this Chapter shall have the meanings ascribed to such words and terms in this Section. Where the masculine is used in these rules, it includes the feminine, and vice versa; where the singular is used, it includes the plural, and vice versa.

Academic Year (college)—

a. through the 2007-2008 academic year, the two- and four-year college and university academic year begins with the fall term of the award year, includes the winter term, if applicable, and concludes with the completion of the spring term of the award year. Intersessions ending during the academic year are included in the academic year. The two- and four-year college and university academic year does not include summer sessions or intersessions that do not end during the academic year;

b. during the 2008-2009 academic year, the academic year begins with the fall term of the award year, includes the winter term, if applicable, and concludes with the completion of the intersession immediately following the spring term of the award year. Intersessions ending during the academic year, including the intersession immediately following the spring term, are included in the academic year. The two- and four-year college and university academic year does not include summer sessions or other intersessions;

c. during the 2009-2010 and 2010-2011 academic years, the academic year begins with the fall term of the award year and concludes with the completion of the spring term of the award year or the intersession immediately following the spring term if such intersession ends no later than June 15, whichever is later. Any intersession or term that begins and ends during the academic year is included. The two- and four-year college and university academic year does not include other intersessions or summer sessions. See the definition of *intersession* below;

d. beginning with the 2011-2012 academic year and thereafter, the academic year begins with the fall term of the award year and concludes immediately before the next fall term commences. All intersessions and summer sessions are included.

* * *

AUTHORITY NOTE: Promulgated in accordance with R.S. 17:3021-3025, R.S. 17:3042.1 and R.S. 17:3048.1.

HISTORICAL NOTE: Promulgated by the Student Financial Assistance Commission, Office of Student Financial Assistance,

LR 22:338 (May 1996), repromulgated LR 24:632 (April 1998), amended LR 24:1898 (October 1998), LR 24:2237 (December 1998), LR 25:256 (February 1999), LR 25:654 (April 1999), LR 25:1458 and 1460 (August 1999), LR 25:1794 (October 1999), LR 26:65 (January 2000), LR 26:688 (April 2000), LR 26:1262 (June 2000), LR 26:1601 (August 2000), LR 26:1993, 1999 (September 2000), LR 26:2268 (October 2000), LR 26:2752 (December 2000), LR 27:36 (January 2001), LR 27:284 (March 2001), LR 27:1219 (August 2001), LR 27:1840 (November 2001), LR 27:1875 (November 2001), LR 28:45 (January 2002), LR 28:446 (March 2002), LR 28:772 (April 2002), LR 28:2330, 2331 (November 2002), LR 29:555 (April 2003), LR 29:879 (June 2003), LR 30:1159 (June 2004), LR 30:2015 (September 2004), LR 31:36 (January 2005), LR 31:3112 (December 2005), LR 33:86 (January 2007), LR 33:439 (March 2007), LR 33:1339 (July 2007), LR 33:2612 (December 2007), LR 34:234 (February 2008), LR 34:1388 (July 2008), LR 34:1884 (September 2008), LR 35:228 (February 2009), LR 35:1489 (August 2009), LR 35:1490 (August 2009), LR 36:311 (February 2010), LR 36:490 (March 2010), LR 36:2854 (December 2010), LR 37:1561 (June 2011), LR 37:1562 (June 2011), LR 38:1953 (August 2012).

George Badge Eldredge
General Counsel

1208#003

RULE

Tuition Trust Authority
Office of Student Financial Assistance

START Saving Program—Interest Rates for 2010 and 2011
(LAC 28:VI.315)

The Louisiana Tuition Trust Authority has amended its START Saving Program rules (R.S. 17:3091 et seq.). (ST12137R)

Title 28
EDUCATION
Part VI. Student Financial Assistance—Higher Education Savings
Chapter 3. Education Savings Account
§315. Miscellaneous Provisions

A. - B.22. …

23. For the year ending December 31, 2010, the Louisiana Education Tuition and Savings Fund earned an interest rate of 2.69 percent.

24. For the year ending December 31, 2010, the Savings Enhancement Fund earned an interest rate of 2.56 percent.

25. For the year ending December 31, 2011, the Louisiana Education Tuition and Savings Fund earned an interest rate of 2.53 percent.

26. For the year ending December 31, 2011, the Savings Enhancement Fund earned an interest rate of 2.47 percent.

C. - S.2. …

AUTHORITY NOTE: Promulgated in accordance with 17:3091-3099.2.

HISTORICAL NOTE: Promulgated by the Tuition Trust Authority, Office of Student Financial Assistance, LR 23:718 (June 1997), amended LR 24:1274 (July 1998), LR 26:1263 (June 2000), repromulgated LR 26:2267 (October 2000), amended LR 27:1221 (August 2001), LR 27:1884 (November 2001), LR 28:1761 (August 2002), LR 28:2335 (November 2002), LR 29:2038 (October 2003), repromulgated LR 29:2374 (November 2003), amended LR 30:791 (April 2004), LR 30:1472 (July 2004), LR 31:2216 (September 2005), LR 32:1434 (August 2006), LR 32:2240 (December 2006), LR 33:2359 (November 2007), LR 34:1886 (September 2008), LR 35:1492 (August 2009), LR 36:492 (March 2010), LR 36:2030 (September 2010), LR 38:1954 (August 2012).

George Badge Eldredge
General Counsel

1208#004

RULE

Department of Environmental Quality
Office of the Secretary

Permit Review (LAC 33:I.1507)(OS087)

Editor's Note: This Section is being repromulgated to correct a typographical error. The original Rule can be viewed in its entirety in the July 20, 2012 edition of the *Louisiana Register* on pages 1586-1587.

Under the authority of the Environmental Quality Act, R.S. 30:2001 et seq., and in accordance with the provisions of the Administrative Procedure Act, R.S. 49:950 et seq., the secretary has amended the Office of the Secretary regulations, LAC 33:I.Chapter 15 (OS087).

The Rule will provide a technical review period for working draft permit documents. This technical review period will provide the applicant an opportunity to provide comments of a technical nature regarding the working draft permit document so that significant errors are avoided prior to issuance of a draft permit decision. By allowing this review period, the department will benefit by not having to reissue draft permit decisions for public comment based on errors that can be caught by the applicant in a technical review.

This Rule provides a regulatory basis for the program currently being administered by the Air Permits Division and Waste Permits Division. Air and waste permits are currently undergoing this technical review based on divisional policies. This Rule will memorialize the process into the regulatory scheme. The basis and rationale for the Rule is to meet the requirements of Act 986 of the Louisiana State Legislature, effective July 6, 2010, which enacts R.S. 30:2022(D). Paragraph (D)(5) of this Act requires the secretary to adopt rules, in accordance with the Administrative Procedure Act, R.S. 49:950 et seq., to implement the requirements of R.S. 30:2022(D). This Rule meets an exception listed in R.S. 30:2019(D)(2) and R.S. 49:953(G)(3); therefore, no report regarding environmental/health benefits and social/economic costs is required.

Title 33
ENVIRONMENTAL QUALITY
Part I. Office of the Secretary
Subpart 1. Departmental Administrative Procedures
Chapter 15. Permit Application and Working Draft Permit Review
§1507. Review of Working Draft Permits

A. Technical Review Period

1. If requested by the permit applicant, the department shall provide the applicant with a reasonable opportunity to

review a working draft permit renewal or a modification to a hazardous waste, solid waste, water discharge, or air quality permit before public notice is provided. If the draft permit includes revisions to an existing permit, the working draft permit, as defined in LAC 33:I.1503, shall clearly identify each change made by the department to the existing permit.

2. When public notice is not required, the department shall provide the applicant with a reasonable opportunity to review the working draft permit or permit modification prior to a final permit decision if:

a. a technical review period, as defined in LAC 33:I.1503, is requested by the applicant; or

b. the department proposes modifications or revisions not associated with the applicant's request. In lieu of a technical review period, the department may reopen the permit in accordance with applicable law.

3. When a technical review period is not requested or required by Subparagraph A.2.b of this Section, an opportunity to review a working draft permit may be provided to the permit applicant upon a determination of need by the department.

B. Permit Differences Report. If requested by the permit applicant, the department shall transmit to the applicant, with the working draft permit, a permit differences report, as defined in LAC 33:I.1503, when such report can be generated by the department's database, as defined in LAC 33:I.1503. Where the database cannot generate a permit differences report, a written summary of specific changes to the existing permit shall be provided whenever the department prepares a draft database permit renewal, extension, or substantial modification.

C. The technical review period shall be no longer than 10 business days. The department may extend the review period upon request of the permit applicant.

D. The permit applicant shall name a designated contact to receive the working draft permit, and provide the appropriate mailing and electronic mail addresses for the contact. Hardcopies of working draft permits shall be provided only when electronic copies are not available.

E. Comments on a working draft permit provided by the permit applicant shall be submitted by the designated contact using the appropriate form provided by the department.

F. When public notice is required, the notice shall indicate that a working draft of the proposed permit was provided to the permit applicant's designated contact and that any remarks submitted on behalf of the permit applicant, and the department's responses thereto, are included in the permit record that is available for public review.

AUTHORITY NOTE: Promulgated in accordance with R.S. 30:2022(D).

HISTORICAL NOTE: Promulgated by the Department of Environmental Quality, Office of the Secretary, Legal Affairs Division, LR 38:1586 (July 2012), repromulgated LR 38:1954 (August 2012).

Herman Robinson, CPM
Executive Counsel

1208#061

RULE

Department of Environmental Quality
Office of the Secretary

Regulatory Permit for Rock, Concrete, and Asphalt Crushing Facilities (LAC 33:III.317)(AQ321)

Under the authority of the Environmental Quality Act, R.S. 30:2001 et seq., and in accordance with the provisions of the Administrative Procedure Act, R.S. 49:950 et seq., the secretary has amended the Air regulations, LAC 33:III.317 (AQ321).

This Rule will provide for a regulatory permit which will authorize air emissions from concrete, rock, and asphalt crushing facilities. The authorization will become effective only upon notification by the department that the application required by the regulatory permit has been determined complete. R.S. 30:2054(B)(9)(a) allows LDEQ to develop regulatory permits for certain sources of air emissions provided the conditions in R.S. 30:2054(B)(9)(b) are satisfied. Pursuant to R.S. 30:2054(B)(9)(b)(viii), all regulatory permits shall be promulgated in accordance with the procedures provided in R.S. 30:2019-Promulgation of rules and regulations (i.e., the Administrative Procedure Act, R.S. 49:950 et seq.). The basis and rational for this Rule are to establish a regulatory permit to authorize air emissions from concrete, rock, and asphalt crushing facilities. This Rule meets an exception listed in R.S. 30:2019(D)(2) and R.S. 49:953(G)(3); therefore, no report regarding environmental/health benefits and social/economic costs is required.

Title 33
ENVIRONMENTAL QUALITY
Part III. Air
Chapter 3. Regulatory Permits
§317. Regulatory Permit for Rock, Concrete, and Asphalt Crushing Facilities

A. Applicability

1. This regulatory permit authorizes the construction and operation of rock, concrete, and asphalt crushing facilities, subject to the requirements established herein, upon notification by the department that the application (i.e., notification form) submitted in accordance with Subsection H of this Section has been determined to be complete.

2. This regulatory permit may be used to authorize both fixed and portable crushers. Fixed crushers are those attached by a cable, chain, turnbuckle, bolt, or other means to any anchor, slab, or structure, including bedrock.

B. New Source Performance Standards. Each fixed crusher with a capacity of more than 25 tons per hour and each portable crusher with a capacity of more than 150 tons per hour for which construction, modification, or reconstruction commenced after August 31, 1983, shall comply with the applicable provisions of 40 CFR 60, Subpart OOO–Standards of Performance for Nonmetallic Mineral Processing Plants. Modification and reconstruction are described in 40 CFR 60.14 and 15, respectively.

C. Control of Fugitive Emissions

1. Emission of particulate matter shall be controlled so that the shade or appearance of the emission is not denser than 20 percent average opacity, except that the emissions may have an average opacity in excess of 20 percent for not more than one 6-minute period in any 60 consecutive minutes.

2. Emissions of smoke or suspended particulate matter that pass onto or across a public road and create a traffic hazard by *impairment of visibility*, as defined in LAC 33:III.111, or intensify an existing traffic hazard condition are prohibited.

3. All reasonable precautions shall be taken to prevent particulate matter from becoming airborne. These precautions shall include, but not be limited to, the following.

a. Open-bodied trucks transporting materials likely to give rise to airborne dust shall be covered at all times when in motion.

b. Earth or other material on paved areas within the facility due to transport by trucking or other means shall be promptly removed.

c. In-plant roads, active work areas, material stockpiles, and other surfaces at the facility shall be watered, treated with dust-suppressant chemicals, oiled, or paved and cleaned as necessary to minimize dust emissions to the greatest extent practicable.

4. If dust cannot be controlled by other means, the department may require permanently mounted spray bars to be installed at the inlet and outlet of the crusher, at all shaker screens, and/or at all material transfer points and used as necessary.

5. Best housekeeping and maintenance practices shall be employed to minimize emissions of organic compounds. Good housekeeping shall include, but not be limited to, the practices described in LAC 33:III.2113.A.1-4.

D. Filter Vents (Baghouses)

1. Monitoring and Repair

a. Filter vents shall be inspected for visible emissions on a daily basis.

b. Filter elements (bags) shall be inspected no less than once every six months or more frequently if daily visual checks indicate maintenance may be necessary.

c. Elements shall be changed in accordance with the manufacturer's recommendations or more frequently if maintenance inspections reveal damage or other impairments impacting the design efficiency of the unit.

2. Recordkeeping. The following records shall be kept on-site and available for inspection by the Office of Environmental Compliance:

a. the results of the visual checks required by Subparagraph D.1.a of this Section;

b. the dates and results of the maintenance inspections required by Subparagraph D.1.b of this Section; and

c. the dates and a description of any maintenance or repair conducted in accordance with Subparagraph D.1.c of this Section.

3. The daily monitoring and recordkeeping requirements in this Subsection shall not apply when the crusher is not operational.

E. Internal Combustion Engines

1. Fuels and Fuel Sulfur Content

a. Internal combustion engines (ICEs) shall not combust noncommercial fuels, including any used oil, facility byproducts, or other type of waste material. Only commercially available fuels such as diesel or gasoline shall be used as a fuel in ICEs.

b. The permittee shall not combust distillate oil that contains greater than 0.5 weight percent sulfur.

2. Opacity

a. Limitations

i. Smoke. The emission of smoke shall be controlled so that the shade or appearance of the emission is not darker than 20 percent average opacity, except that the emissions may have an average opacity in excess of 20 percent for not more than one 6-minute period in any 60 consecutive minutes.

ii. Particulate Matter. The emission of particulate matter shall be controlled so that the shade or appearance of the emission is not denser than 20 percent average opacity, except that the emissions may have an average opacity in excess of 20 percent for not more than one 6-minute period in any 60 consecutive minutes.

iii. Subparagraph E.2.a of this Section shall not apply if the presence of uncombined water is the only reason for failure of an emission to meet the opacity limitations.

b. Monitoring, Recordkeeping, and Reporting

i. The permittee shall inspect each ICE's stack for visible emissions once each month.

ii. If visible emissions are detected for more than one 6-minute period over a 60 consecutive minute test period, the permittee shall conduct a 6-minute opacity reading in accordance with Method 9 of 40 CFR 60, Appendix A, within 3 operating days.

iii. If the shade or appearance of the emission is darker than 20 percent average opacity in accordance with Method 9 of 40 CFR 60, Appendix A, the permittee shall take corrective action to return the ICE to its proper operating condition, and the 6-minute opacity reading shall be repeated in accordance with Method 9. The permittee shall notify the Office of Environmental Compliance no later than 30 calendar days after the occurrence of any Method 9 readings in excess of 20 percent average opacity. This notification shall include the date the visual check was performed, results of the Method 9 testing, and a record of the corrective action employed.

iv. Records of visible emissions checks shall include the ICE's serial number, the date the visual check was performed, a record of emissions if visible emissions were detected for a period longer than 6 consecutive minutes, the results of any Method 9 testing conducted, and a record of any corrective action employed. These records shall be kept on-site and available for inspection by the Office of Environmental Compliance.

3. New Source Performance Standards

a. Each stationary compression ignition (CI) ICE described in 40 CFR 60.4200(a) shall comply with the applicable provisions of 40 CFR 60, Subpart IIII–Standards of Performance for Stationary Compression Ignition Internal Combustion Engines, unless the ICE is exempted as described in 40 CFR 60.4200(d).

b. Each stationary spark ignition (SI) ICE described in 40 CFR 60.4230(a) shall comply with the applicable provisions of 40 CFR 60, Subpart JJJJ–Standards of Performance for Stationary Spark Ignition Internal Combustion Engines, unless the ICE is exempted as described in 40 CFR 60.4230(e) or meets the conditions set forth in 40 CFR 60.4230(f).

4. National Emissions Standards for Hazardous Air Pollutants. Each stationary reciprocating ICE described in 40 CFR 63.6590 shall comply with the applicable provisions of 40 CFR 63, Subpart ZZZZ–National Emissions Standards for Hazardous Air Pollutants for Stationary Reciprocating Internal Combustion Engines.

5. Gasoline storage tanks associated with an ICE and with a nominal capacity of more than 250 gallons shall be equipped with a submerged fill pipe.

F. Operating Time. The crusher and associated equipment (excluding stockpiles and storage vessels) shall not operate for more than 4380 hours per calendar year.

1. Operating time shall be monitored by any technically sound means.

2. Operating time of the crusher shall be recorded each month, as well as its operating time for the last 12 months. The records shall be kept on-site for five years and available for inspection by the Office of Environmental Compliance.

G. Monitoring of Capacity. The department may require the crusher to be equipped with a weigh hopper or scale belt to accurately determine the weight of material being crushed.

H. Notification Requirements. Written notification describing the crusher shall be submitted to the Office of Environmental Services using the appropriate form provided by the department. A separate notification form shall be submitted for each crusher.

I. Relocation. The permittee shall notify the department prior to moving the crusher to a new operating site. The permittee shall obtain approval from the department before commencing operations at a new site.

J. Standby Plan. The permittee shall develop and retain on site a standby plan for the reduction or elimination of emissions during an Air Pollution Alert, Air Pollution Warning, or Air Pollution Emergency. The plan shall be designed in accordance with the objectives set forth in LAC 33:III.5611, Tables 5, 6, and 7.

1. Activate the pre-planned abatement strategies listed in LAC 33:III.5611, Table 5 when the department declares an Air Pollution Alert.

2. Activate the pre-planned abatement strategies listed in LAC 33:III.5611, Table 6 when the department declares an Air Pollution Warning.

3. Activate the pre-planned abatement strategies listed in LAC 33:III.5611, Table 7 when the department declares an Air Pollution Emergency.

K. Fees. In accordance with LAC 33:III.223, Table 1, the new permit application fee for this regulatory permit shall be $2,080 (fee number 0870). In accordance with LAC 33:III.209 and 211, the annual maintenance fee associated with this regulatory permit shall be $416. If potential emissions from the crusher are such that it qualifies for a small source permit as described in LAC 33:III.503.B.2, then fee number 1722 located in LAC 33:III.223, Table 1 shall apply in accordance with LAC 33:III.211.B.13.e.

AUTHORITY NOTE: Promulgated in accordance with R.S. 30:2054.

HISTORICAL NOTE: Promulgated by the Department of Environmental Quality, Office of the Secretary, Legal Affairs Division, LR 38:1955 (August 2012).

Herman Robinson, CPM
Executive Counsel

1208#062

RULE

Office of the Governor
Board of Examiners of Certified Shorthand Reporters

Certification of Transcript (LAC 46:XXI.1103)

In accordance with the Administrative Procedures Act, R.S. 49:950 et seq., the Louisiana Board of Examiners of Certified Shorthand Reporters has amended the court reporting procedures Rule.

Title 46
PROFESSIONAL AND OCCUPATIONAL STANDARDS
Part XXI. Certified Shorthand Reporters
Chapter 11. Court Reporting Procedures
§1103. Certification of Transcript

A. Effective January 1, 2013, each certified court reporter shall attest to the accuracy of every transcript prepared by that reporter by dating, signing, and sealing a certification page containing substantially the following language.

> This certification is valid only for a transcript accompanied by my original signature and original required seal on this page.
>
> I, [reporter's name], Certified Court Reporter in and for the State of Louisiana, as the officer before whom this testimony was taken, do hereby certify that [name of person(s) to whom oath was administered], after having been duly sworn by me upon authority of R.S. 37:2554, did testify as hereinbefore set forth in the foregoing [number of] pages; that this testimony was reported by me in the [stenotype; stenomask; penwriter; electronic] reporting method, was prepared and transcribed by me or under my personal direction and supervision, and is a true and correct transcript to the best of my ability and understanding; that the transcript has been prepared in compliance with transcript format guidelines required by statute or by rules of the board, that I have acted in compliance with the prohibition on contractual relationships, as defined by Louisiana Code of Civil Procedure Article 1434 and in rules and advisory opinions of the board; that I am not related to counsel or to the parties herein, nor am I otherwise interested in the outcome of this matter.

B. ...

C. Effective January 1, 2013, each certified official or deputy official court reporter shall attest to the accuracy of every transcript prepared by that reporter by dating, signing, and sealing a certification page containing substantially the following language.

> This certificate is valid only for a transcript accompanied by my original signature and original required seal on this page.

I, [reporter's name], Official or Deputy Official Court Reporter in and for the State of Louisiana, employed as an official or deputy official court reporter by the [court name] for the State of Louisiana, as the officer before whom this testimony was taken, do hereby certify that this testimony was reported by me in the [stenotype; stenomask; penwriter; electronic; digital] reporting method, was prepared and transcribed by me or under my direction and supervision, and is a true and correct transcript to the best of my ability and understanding; that the transcript has been prepared in compliance with transcript format guidelines required by statute or by rules of the board or by the Supreme Court of Louisiana, and that I am not related to counsel or to the parties herein nor am I otherwise interested in the outcome of this matter.

D. No certified official or deputy official court reporter shall execute the foregoing certification without having first reviewed and approved the accuracy of the transcript to which such certification is attached.

AUTHORITY NOTE: Promulgated in accordance with R.S. 37:2554 and R.S. 37:2557.

HISTORICAL NOTE: Promulgated by the Department of Economic Development, Board of Examiners of Certified Shorthand Reporters, LR 21:21 (January 1995), amended LR 37:318 (January 2011), LR 38: 1957 (August 2012), effective January 1, 2013.

Vincent P. Borrello, Jr.
Education Committee Chairman

1208#134

RULE

Department of Health and Hospitals
Board of Dentistry

Anesthesia/Analgesia Administration and
Continuing Education Requirements
(LAC 46:XXXIII.1505, 1507, 1509, and 1611)

In accordance with the applicable provisions of the Administrative Procedure Act, R.S. 49:950 et seq., the Dental Practice Act, R.S. 37:751 et seq., and particularly R.S. 37:760(8), the Department of Health and Hospitals, Board of Dentistry amends LAC 46:XXXIII.1505, 1507, 1509, and 1611.

Title 46
PROFESSIONAL AND OCCUPATIONAL STANDARDS
Part XXXIII. Dental Health Profession
Chapter 15. Anesthesia/Analgesia Administration

§1505. Conscious Sedation with Parenteral Drugs

A. - A.2. ...

B. In order to receive a permit the dentist must show and produce evidence that he/she complies with the following provisions:

1. successful completion of a personally attended advanced training program beyond the pre-doctoral dental school level accredited by the Commission on Dental Accreditation of the American Dental Association which includes anesthesiology and related academic subjects as required in §1505 of this Chapter; or

2. utilization of the services of a third party medical doctor, or doctor of osteopathy specializing in anesthesiology, certified registered nurse anesthetist, or an oral and maxillofacial surgeon permitted by the board to administer conscious and unconscious sedation provided that those third party anesthetists must remain on the premises of the dental facility until any patient given parenteral drugs is sufficiently recovered; or

3. successful completion of a board-approved personally attended continuing education course as described in Part III of the American Dental Association Guidelines for Teaching the Comprehensive Control of Pain and Anxiety in Dentistry provided the applicant has held a license to practice dentistry for a minimum of three years. The board has determined that 80 hours of clinical airway management would be a minimum to achieve competency as described in Part III of the previously mentioned guidelines.

C. In addition to the requirements of Subsection B of this Section the dentist must provide proof of current certification in cardiopulmonary resuscitation, course "Advanced Cardiac Life Support" (ACLS) as defined by the American Heart Association, or its equivalent. The board will only accept an ACLS course which includes a practical component which is personally attended.

D. Provide proof of current certification in pediatric advanced life support (PALS) when administering sedation to patients under the age of 13. The board will only accept a PALS course which includes a practical component which is personally attended.

AUTHORITY NOTE: Promulgated in accordance with R.S. 37:760(8).

HISTORICAL NOTE: Promulgated by the Department of Health and Hospitals, Board of Dentistry, LR 20:659 (June 1994), amended LR 22:1216 (December 1996), LR 33:2653 (December 2007), LR 38:1958 (August 2012).

§1507. General Anesthesia/Deep Sedation

A. - A.1. …

2. in order to receive a permit the dentist must show and produce evidence that he complies with the following provisions:

a. successful completion of an oral and maxillofacial surgery training program accredited by the Commission on Dental Accreditation of the American Dental Association which includes anesthesiology and related academic subjects as required in §1509 of this Chapter; or successful completion of a personally attended program which complies with Part II of the American Dental Association Guidelines for Teaching the Comprehensive Control of Pain and Anxiety in Dental Education at the advanced level;

b. - c. ...

AUTHORITY NOTE: Promulgated in accordance with R.S. 37:760(8).

HISTORICAL NOTE: Promulgated by the Department of Health and Hospitals, Board of Dentistry, LR 20:659 (June 1994), amended LR 32:2057 (November 2006), LR 33:2653 (December 2007), LR 38:1958 (August 2012).

§1509. Minimal Educational Requirements for the Granting of Permits to Administer Nitrous Oxide Inhalation Analgesia, Conscious Sedation with Parenteral Drugs and General Anesthesia/Deep Sedation

A. - A.3. ...

B. Conscious Sedation with Parenteral Drugs

1. To be granted a conscious sedation with parenteral drugs permit, the applicant's training must be personally

attended. Online or correspondence courses are not acceptable.

2. To be granted a "limited" permit, the applicant must submit verification of successful completion of formal post-doctoral training in the use of parenteral drugs via the intramuscular (IM), submucosal (SM), intranasal (IN), and subcutaneous (SC) routes of administration and competency to handle all emergencies relating to parenteral sedation providing such program consists of a minimum of 60 hours of instruction and 100 hours of clinical experience which includes at least 10 documented cases of parenteral sedation.

3. To be granted a "full" permit, the applicant must submit verification of successful completion of formal post-doctoral training in the use of parental drugs via the intramuscular (IM), submucosal (SM), intranasal (IN), subcutaneous (SC), and conscious IV sedation routes of administration and competency to handle all emergencies relating to parenteral sedation providing such program consists of a minimum of 60 hours of instruction and 100 hours of clinical experience which includes at least 20 documented cases of parenteral sedation.

C. …

1. To be granted a conscious sedation with enteral drugs permit, the applicant's training must be personally attended. Online or correspondence courses are not acceptable.

2. To be granted an unrestricted (adults and children) permit to administer conscious sedation with enteral drugs, the applicant must submit verification of successful completion of formal post-doctoral training in the use of enteral conscious sedation on both pediatric and adult patients or satisfactory completion of a board approved course which includes a minimum of 16 hours of didactic training and a component on handling emergencies incident to the administration of conscious sedation.

3. To be granted a restricted permit (adults only) to administer conscious sedation with enteral drugs, the applicant must submit verification of successful completion of formal post-doctoral training in the use of enteral conscious sedation on adult patients or satisfactory completion of a board approved course which includes a minimum of 8 hours of didactic training and a component on handling emergencies incident to the administration of conscious sedation.

D. …

AUTHORITY NOTE: Promulgated in accordance with R.S. 37:760(8).

HISTORICAL NOTE: Promulgated by the Department of Health and Hospitals, Board of Dentistry, LR 20:659 (June 1994), amended LR 22:1216 (December 1996), LR 32:244 (February 2006), LR 37:590 (February 2011), LR 37:2151 (July 2011), LR 38:1958 (August 2012).

Chapter 16. Continuing Education Requirements

§1611. Continuing Education Requirements for Relicensure of Dentists

A. - J.1. …

2. For the renewal of enteral conscious sedation, parenteral conscious sedation, deep sedation or general anesthesia permits, the licensee must personally attend the appropriate continuing education course. Online or correspondence courses for the renewal of enteral conscious sedation, parenteral conscious sedation, deep sedation or general anesthesia permits will not be accepted.

K. - L. ...

AUTHORITY NOTE: Promulgated in accordance with R.S. 37:760(8) and (13).

HISTORICAL NOTE: Promulgated by the Department of Health and Hospitals, Board of Dentistry, LR 20:661 (June 1994), amended LR 21:569 (June 1995), LR 22:24 (January 1996), LR 22:1216 (December 1996), LR 23:1526 (November 1997), LR 24:1117 (June 1998), LR 25:510 (March 1999), LR 26:489 (March 2000), LR 30:2307 (October 2004), LR 32:244 (February 2006), LR 35:1237 (July 2009), LR 36:2038 (September 2010), LR 37:2151 (July 2011), LR 37:3515 (December 2011), repromulgated LR 38:356 (February 2012), LR 38:817 (March 2012), LR 38:1959 (August 2012).

Peyton B. Burkhalter
Executive Director

1208#055

RULE

Department of Health and Hospitals
Board of Dentistry

Examination of Dentists (LAC 46:XXXIII.1709 and 1711)

In accordance with the applicable provisions of the Administrative Procedure Act, R.S. 49:950 et seq., the Dental Practice Act, R.S. 37:751 et seq., and particularly R.S. 37:760(8), the Department of Health and Hospitals, Board of Dentistry amends LAC 46:XXXIII.1709 and 1711.

Title 46
PROFESSIONAL AND OCCUPATIONAL STANDARDS
Part XXXIII. Dental Health Profession

Chapter 17. Licensure Examinations

§1709. Examination of Dentists

A. - B.4. …

C. To be licensed as a dentist in this state, an applicant for initial licensure must successfully complete the following:

1. a written examination on the jurisprudence and ethics of the state regulating the practice of dentistry; and

2. the clinical examination administered by the Louisiana State Board of Dentistry approved testing agency. This agency will be named by the board and this relationship may be changed or amended as deemed necessary by the board.

D. Effective January 1, 2012 the clinical licensing examinations administered by Central Regional Dental Testing Service (CRDTS), Northeast Regional Board (NERB), Southern Regional Testing Agency (SRTA), American Dental Exam (ADEX), and Western Regional Examining Board (WREB), will not be accepted by the Louisiana State Board of Dentistry for initial licensure. However, applicants who have taken those examinations prior to the examination cycle of calendar year 2011 shall have three years from the date of their successful completion of those examinations to apply for a license via examination in the state of Louisiana. After the three year deadline it will be necessary for those applicants to apply for a licensure by credentials in the state of Louisiana.

E. The board is expressly authorized to utilize the services of other licensed dentists to facilitate the examination.

F. …

G. Notwithstanding any other law to the contrary or any examination manual of any of the testing agencies listed in Subsection C of this Section, no candidate for licensure in the state of Louisiana will be granted same if said candidate has failed any clinical licensing examination for a total of three times. This number includes the accumulation of all examinations taken regardless of the testing agency. A make-up examination counts as an examination.

AUTHORITY NOTE: Promulgated in accordance with R.S. 37:760(1) and (8).

HISTORICAL NOTE: Promulgated by the Department of Health and Hospitals, Board of Dentistry, LR 24:1119 (June 1998), amended LR 28:2513 (December 2002), LR 33:2654 (December 2007), LR 37:1407 (May 2011), LR 37:2151 (July 2011), LR 37:3516 (December 2011), repromulgated LR 38:356 (February 2012), amended LR 38:1959 (August 2012).

§1711. Examination of Dental Hygienists

A. - B.4. …

C. To be licensed as a dental hygienist in this state, an applicant must successfully complete the following:

1. a written examination on the jurisprudence and ethics of the state regulating the practice of dental hygiene; and

2. the clinical examination administered by the Louisiana State Board of Dentistry approved testing agency. This agency will be named by the board and this relationship may be changed or amended as deemed necessary by the board.

D. Effective January 1, 2012 the clinical licensing examinations administered Central Regional Dental Testing Service (CRDTS), Northeast Regional Board (NERB), Southern Regional Testing Agency (SRTA), American Dental Exam (ADEX), and Western Regional Examining Board (WREB), will not be accepted by the Louisiana State Board of Dentistry for initial licensure. However, applicants who have taken those examinations prior to the examination cycle of calendar year 2011 shall have three years from the date of their successful completion of those examinations to apply for a license via examination in the state of Louisiana. After the three year deadline it will necessary for those applicants to apply for a licensure by credentials in the state of Louisiana.

E. No clinical licensing examination may be conducted in the state of Louisiana without the written permission from the Louisiana State Board of Dentistry. For permission to be granted, the agency conducting the examination must have at least four current members of the Louisiana State Board of Dentistry participating in the clinical licensing examination.

F. Notwithstanding any other law to the contrary or any examination manual of any of the testing agencies, no candidate for licensure in the state of Louisiana will be granted same if said candidate has failed any clinical licensing examination for a total of three times. This number includes the accumulation of all examinations taken regardless of the testing agency. A make-up examination counts as an examination.

AUTHORITY NOTE: Promulgated in accordance with R.S. 37:760(1) and (8).

HISTORICAL NOTE: Promulgated by the Department of Health and Hospitals, Board of Dentistry, LR 24:1119 (June 1998), amended LR 28:1779 (August 2002), LR 33:2654 (December 2007), LR 37:1407 (May 2011), LR 37:2151 (July 2011), LR 37:3516 (December 2011), repromulgated LR 38:356 (February 2012), amended LR 38:1960 (August 2012).

Peyton B. Burkhalter
Executive Director

1208#054

RULE

Department of Health and Hospitals
Board of Dentistry

Patients' Records (LAC 46:XXXIII.318)

In accordance with the applicable provisions of the Administrative Procedure Act, R.S. 49:950 et seq., the Dental Practice Act, R.S. 37:751 et seq., and particularly R.S. 37:760(8), the Department of Health and Hospitals, Board of Dentistry amends LAC 46:XXXIII.318. No preamble has been prepared.

The Louisiana State Board of Dentistry made grammatical changes to the Rule and title. In addition, the Rule is being clarified to set forth the number of days within which a dentist has to produce records of a patient and where the patient records are maintained.

Title 46
PROFESSIONAL AND OCCUPATIONAL STANDARDS
Part XXXIII. Dental Health Profession
Chapter 3. Dentists
§318. Patients' Records

A. Upon written request from the patient or the patient's legal representative, each dentist shall furnish a copy of any of the patient's dental records maintained by the dentist within 15 days, from the receipt of the request.

B.1. - C.3. ….

AUTHORITY NOTE: Promulgated in accordance with R. S. 37:760(8) and R.S. 40:1299.96.

HISTORICAL NOTE: Promulgated by the Department of Health and Hospitals, Board of Dentistry, LR 24:1114 (June 1998), amended LR 28:1777 (August 2002), LR 38:1960 (August 2012).

Peyton B. Burkhalter
Executive Director

1208#056

RULE

Department of Health and Hospitals
Board of Wholesale Drug Distributors

Fees (LAC 46:XCI.801)

The Louisiana Board of Wholesale Drug Distributors has amended LAC 46:XCI.801 in accordance with the provisions of the Administrative Procedures Act, R.S. 49:950 et seq., and R.S. 37:3467 et seq., of the Louisiana Board of Wholesale Drug Distributors Practice Act. This Rule amendment will support the board's ability to license entities and regulate the wholesale distribution of legend drugs and devices into and within the state of Louisiana in its effort to safeguard the life and health of its citizens and

promote the public welfare. The amendments to the Rule are set forth below.

Title 46
PROFESSIONAL AND OCCUPATION STANDARDS
Part XCI. Wholesale Drug Distributors
Chapter 8. Fees
§801. Fees

A. The board may collect the following fees:

1. initial license fee—$400;
2. license renewal fee—$300;
3. - 4. ...
5. license reinstatement fee for licenses suspended, revoked, or expired—$300;
6. ...

AUTHORITY NOTE: Promulgated in accordance with R.S. 37:3461-3482.

HISTORICAL NOTE: Promulgated by the Department of Health and Hospitals, Board of Wholesale Drug Distributors, LR 32:403 (March 2006), amended LR 35:1540 (August 2009), LR 38:1961 (August 2012).

John Liggio
Executive Director

1208#014

RULE

Department of Health and Hospitals
Bureau of Health Services Financing

Ambulatory Surgical Centers
Reimbursement Methodology—Never Events
(LAC 50:XI.7501)

The Department of Health and Hospitals, Bureau of Health Services Financing has amended LAC 50:IX.7501 in the Medical Assistance Program as authorized by R.S. 36:254 and pursuant to Title XIX of the Social Security Act. This Rule is promulgated in accordance with the provisions of the Administrative Procedure Act, R.S. 49:950 et seq.

Title 50
PUBLIC HEALTH—MEDICAL ASSISTANCE
Part XI. Clinic Services
Subpart 11. Ambulatory Surgical Centers
Chapter 75. Reimbursement
§7501. General Provisions

A. - B. …

C. Never Events. Effective for dates of service on or after July 1, 2012, the Medicaid Program will not provide reimbursement to ambulatory surgical centers for "never events" or medical procedures performed in error which are preventable and have a serious, adverse impact to the health of the Medicaid recipient. Reimbursement will not be provided when the following "never events" occur:

1. the wrong surgical procedure is performed on a patient;
2. surgical or invasive procedures are performed on the wrong body part; or
3. surgical or invasive procedures are performed on the wrong patient.

AUTHORITY NOTE: Promulgated in accordance with R.S. 36:254 and Title XIX of the Social Security Act.

HISTORICAL NOTE: Promulgated by the Department of Health and Hospitals, Bureau of Health Services Financing, LR 35:1888 (September 2009), amended LR 38:1961 (August 2012).

Bruce D. Greenstein
Secretary

1208#122

RULE

Department of Health and Hospitals
Bureau of Health Services Financing

Facility Need Review
Outpatient Abortion Facilities
(LAC 48:I.12501, 12503 and 12524)

The Department of Health and Hospitals, Bureau of Health Services Financing has amended LAC 48:I.12501 and §12503 and adopted §12524 in the Medical Assistance Program as authorized by R.S. 36:254 and R.S. 40:2116. This Rule is promulgated in accordance with the provisions of the Administrative Procedure Act, R.S. 49:950 et seq.

Title 48
PUBLIC HEALTH—GENERAL
Part I. General Administration
Subpart 5. Health Planning
Chapter 125. Facility Need Review
Subchapter A. General Provisions
§12501. Definitions

A. ...

* * *

Outpatient Abortion Facility—any outpatient facility licensed by the Department of Health and Hospitals pursuant to R.S. 40:2175.1 et seq., or its successor licensing statute.

* * *

AUTHORITY NOTE: Promulgated in accordance with R.S. 40:2116.

HISTORICAL NOTE: Promulgated by the Department of Health and Hospitals, Office of the Secretary, Bureau of Health Services Financing, LR 21:806 (August 1995), amended LR 25:1250 (July 1999), LR 28:2190 (October 2002), LR 30:1023 (May 2004), LR 32:845 (May 2006), LR 34:2611 (December 2008), amended by the Department of Health and Hospitals, Bureau of Health Services Financing, LR 35:2437 (November 2009), LR 36:323 (February 2010), LR 38:1961 (August 2012).

§12503. General Information

A. - C.1. ...

2. home and community-based service providers, as defined under this Chapter;
3. adult day health care providers;
4. hospice providers or inpatient hospice facilities; and
5. outpatient abortion facilities.

D. - F.4. ...

G. Additional Grandfather Provision. An approval shall be deemed to have been granted under FNR without review for HCBS providers, ICFs-DD, ADHC providers, hospice

providers, and outpatient abortion facilities that meet one of the following conditions:

1. ...

2. existing licensed ICFs-DD that are converting to the proposed residential options waiver;

3. ADHC providers who were licensed as of December 31, 2009 or who had a completed initial licensing application submitted to the department by December 31, 2009, or who are enrolled or will enroll in the Louisiana Medicaid Program solely as a program for all-inclusive care for the elderly provider;

4. hospice providers that were licensed, or had a completed initial licensing application submitted to the department, by March 20, 2012; or

5. outpatient abortion facilities which were licensed by the department on or before May 20, 2012.

H. - H.2. ...

AUTHORITY NOTE: Promulgated in accordance with R.S. 40:2116.

HISTORICAL NOTE: Repealed and repromulgated by the Department of Health and Hospitals, Office of the Secretary, Bureau of Health Services Financing, LR 21:808 (August 1995), amended LR 28:2190 (October 2002), LR 30:1483 (July 2004), amended by the Department of Health and Hospitals, Bureau of Health Services Financing, LR 34:2612 (December 2008), amended LR 35:2437 (November 2009), LR 36:323 (February 2010), LR 38:1961 (August 2012).

Subchapter B. Determination of Bed, Unit, Facility or Agency Need

§12524. Outpatient Abortion Facilities

A. No outpatient abortion facility shall be licensed to operate unless the FNR Program has granted an approval for the issuance of an outpatient abortion facility license. Once the FNR Program approval is granted, an outpatient abortion facility is eligible to be licensed by the department, subject to meeting all of the requirements for licensure.

B. The service area for proposed or existing outpatient abortion facilities is the DHH region where the facility is or will be licensed.

C. Determination of Need/Approval

1. The department will review the application to determine if there is a need for an additional outpatient abortion facility in the DHH region.

2. The department shall grant FNR approval only if the FNR application, the data contained in the application and other evidence effectively establishes the probability of serious, adverse consequences to individuals' ability to access outpatient abortion facility services if the facility is not allowed to be licensed.

3. In reviewing the application, the department may consider, but is not limited to, evidence showing:

a. the number of other licensed outpatient abortion facilities in the DHH Region; and

b. individuals' inability to access outpatient abortion clinic services.

4. The burden is on the applicant to provide data and evidence to effectively establish the probability of serious, adverse consequences to individuals' ability to access outpatient abortion clinic services if the facility is not allowed to be licensed. The department shall not grant any FNR approvals if the applicant fails to provide such data and evidence.

D. Applications for approvals of outpatient abortion facilities submitted under these provisions are bound to the description in the application with regard to the type of services proposed as well as to the site and location as defined in the application. FNR approval of facilities shall expire if these aspects of the application are altered or changed.

E. FNR approvals for outpatient abortion facilities are non-transferrable and are limited to the location and the name of the original licensee.

1. An outpatient abortion facility undergoing a change of location within the same DHH region in which it is licensed shall submit a written attestation of the change of location and the department shall re-issue the FNR approval with the name and new location. An outpatient abortion facility undergoing a change of location outside of the DHH Region in which it is currently licensed shall submit a new FNR application and fee and undergo the FNR approval process.

2. An outpatient abortion facility undergoing a change of ownership shall submit a new FNR application to the department's FNR Program. FNR approval for the new owner shall be granted upon submission of the new application and proof of the change of ownership, which must show the seller's or transferor's intent to relinquish the FNR approval.

3. FNR approval of a licensed provider shall automatically expire if the provider is moved or transferred to another party, entity or location without application to and approval by the FNR program.

F. Outpatient abortion facilities shall have six months from the date of FNR approval to obtain final architectural plan approval and shall have one year from the date of FNR approval within which to become licensed. A one-time 90 day extension may be granted, at the discretion of the department, when delays are caused by circumstances beyond the control of the applicant. Inappropriate zoning is not a basis for extension. Failure to meet the timeframes in this Section shall result in an automatic expiration of the FNR approval.

AUTHORITY NOTE: Promulgated in accordance with R.S. 40:2116.

HISTORICAL NOTE: Promulgated by the Department of Health and Hospitals, Bureau of Health Services Financing, LR 38:1962 (August 2012).

Bruce D. Greenstein
Secretary

1208#121

RULE

Department of Health and Hospitals
Bureau of Health Services Financing

Inpatient Hospital Services
Healthcare-Acquired and Provider-Preventable Conditions
(LAC 50:V.109)

The Department of Health and Hospitals, Bureau of Health Services Financing has adopted LAC 50:V.109 in the Medical Assistance Program as authorized by R.S. 36:254

and pursuant to Title XIX of the Social Security Act. This Rule is promulgated in accordance with the provisions of the Administrative Procedure Act, R.S. 49:950 et seq.

Title 50

PUBLIC HEALTH—MEDICAL ASSISTANCE

Part V. Hospital Services

Subpart 1. Inpatient Hospital Services

Chapter 1. General Provisions

§109. Healthcare-Acquired and Provider Preventable Conditions

A. Effective for dates of service on or after July 1, 2012, the Medicaid Program will not provide reimbursement for healthcare-acquired or provider preventable conditions which result in medical procedures performed in error and have a serious, adverse impact to the health of the Medicaid recipient.

B. Reimbursement shall not be provided for the following healthcare-acquired conditions (for any inpatient hospital settings participating in the Medicaid Program) including:

1. foreign object retained after surgery;
2. air embolism;
3. blood incompatibility;
4. stage III and IV pressure ulcers;
5. falls and trauma, including:
   a. fractures;
   b. dislocations;
   c. intracranial injuries;
   d. crushing injuries;
   e. burns; or
   f. electric shock;
6. catheter-associated urinary tract infection (UTI);
7. vascular catheter-associated infection;
8. manifestations of poor clycemic control, including:
   a. iabetic ketoacidosis;
   b. nonketotic hyperosmolar coma;
   c. hypoglycemic coma;
   d. secondary siabetes with ketoacidosis; or
   e. secondary diabetes with hyperosmolarity;
9. surgical site infection following:
   a. coronary artery bypass graft (CABG)-mediastinitis;
   b. bariatric surgery, including:
      i. laparoscopic gastric bypass;
      ii. gastroenterostomy; or
      iii. laparoscopic gastric restrictive surgery; or
   c. orthopedic procedures, including:
      i. spine;
      ii. neck;
      iii. shoulder; or
      iv. elbow; or
10. deep vein thrombosis (DVT)/pulmonary embolism (PE) following total knee replacement or hip replacement with pediatric and obstetric exceptions.

C. Reimbursement shall not be provided for the following provider preventable conditions, (for any inpatient hospital settings participating in the Medicaid Program) including:

1. wrong surgical or other invasive procedure performed on a patient;
2. surgical or other invasive procedure performed on the wrong body part; or
3. surgical or other invasive procedure performed on the wrong patient.

D. For discharges on or after July 1, 2012, all hospitals are required to bill the appropriate present-on-admission (POA) indicator for each diagnosis code billed. All claims with a POA indicator with a health care-acquired condition code will be denied payment.

AUTHORITY NOTE: Promulgated in accordance with R.S. 36:254 and Title XIX of the Social Security Act.

HISTORICAL NOTE: Promulgated by the Department of Health and Hospitals, Bureau of Health Services Financing, LR 38:1963 (August 2012).

Implementation of the provisions of this Rule may be contingent upon the approval of the U.S. Department of Health and Human Services, Centers for Medicare and Medicaid Services (CMS), if it is determined that submission to CMS for review and approval is required.

Bruce D. Greenstein
Secretary

1208#120

RULE

Department of Health and Hospitals
Bureau of Health Services Financing

Outpatient Hospital Services—Never Events
(LAC 50:V.5113)

The Department of Health and Hospitals, Bureau of Health Services Financing has adopted LAC 50:V.5113 in the Medical Assistance Program as authorized by R.S. 36:254 and pursuant to Title XIX of the Social Security Act. This Rule is promulgated in accordance with the provisions of the Administrative Procedure Act, R.S. 49:950 et seq.

Title 50

PUBLIC HEALTH-MEDICAL ASSISTANCE

Part V. Hospital Services

Subpart 5. Outpatient Hospital Services

Chapter 51. General Provisions

§5113. Never Events

A. Effective for dates of service on or after July 1, 2012, the Medicaid Program will not provide reimbursement for outpatient hospital services for "never events" or medical procedures performed in error which are preventable and have a serious, adverse impact to the health of the Medicaid recipient. Reimbursement will not be provided when the following "never events" occur:

1. the wrong surgical procedure is performed on a patient;
2. surgical or invasive procedures are performed on the wrong body part; or
3. surgical or invasive procedures are performed on the wrong patient.

AUTHORITY NOTE: Promulgated in accordance with R.S. 36:254 and Title XIX of the Social Security Act.

HISTORICAL NOTE: Promulgated by the Department of Health and Hospitals, Bureau of Health Services Financing, LR 38:1252 (May 2012), 38:1963(August 2012).

Implementation of the provisions of this Rule may be contingent upon the approval of the U.S. Department of Health and Human Services, Centers for Medicare and Medicaid Services (CMS), if it is determined that submission to CMS for review and approval is required.

Bruce D. Greenstein
Secretary

1208#119

RULE

Department of Health and Hospitals
Bureau of Health Services Financing

Professional Services Program
Reimbursement Methodology—Never Events
(LAC 50:IX.15107)

The Department of Health and Hospitals, Bureau of Health Services Financing has adopted LAC 50:IX.15107 in the Medical Assistance Program as authorized by R.S. 36:254 and pursuant to Title XIX of the Social Security Act. This Rule is promulgated in accordance with the provisions of the Administrative Procedure Act, R.S. 49:950 et seq.

Title 50
PUBLIC HEALTH—MEDICAL ASSISTANCE
Part IX. Professional Services Program
Subpart 15. Reimbursement
Chapter 151. Reimbursement Methodology
Subchapter A. General Provisions
§15107. Never Events

A. Effective for dates of service on or after July 1, 2012, the Medicaid Program will not provide reimbursement to providers in the Professional Services Program for "never events" or medical procedures performed in error which are preventable and have a serious, adverse impact to the health of the Medicaid recipient. Reimbursement will not be provided when the following "never events" occur:

1. the wrong surgical procedure is performed on a patient;
2. surgical or invasive procedures are performed on the wrong body part; or
3. surgical or invasive procedures are performed on the wrong patient.

AUTHORITY NOTE: Promulgated in accordance with R.S. 36:254 and Title XIX of the Social Security Act.

HISTORICAL NOTE: Promulgated by the Department of Health and Hospitals, Bureau of Health Services Financing, LR 38:1964 (August 2012).

Implementation of the provisions of this Rule may be contingent upon the approval of the U.S. Department of Health and Human Services, Centers for Medicare and Medicaid Services, if it is determined that submission to CMS for review and approval is required.

Bruce D. Greenstein
Secretary

1208#118

RULE

Department of Health and Hospitals
Bureau of Health Services Financing

Professional Services Program Supplemental Payments for
Tulane Professional Practitioners
(LAC 50:IX.15155)

The Department of Health and Hospitals, Bureau of Health Services Financing has adopted LAC 50:IX.15155 in the Medical Assistance Program as authorized by R.S. 36:254 and pursuant to Title XIX of the Social Security Act. This Rule is promulgated in accordance with the provisions of the Administrative Procedure Act, R.S. 49:950 et seq.

Title 50
PUBLIC HEALTH—MEDICAL ASSISTANCE
Part IX. Professional Services Program
Subpart 15. Reimbursement
Chapter 151. Reimbursement Methodology
Subchapter F. Supplemental Payments
§15155. Qualifying Criteria—Professional Services of Practitioners Affiliated with Tulane School of Medicine.

A. Effective for dates of service on or after July 1, 2012, physicians and other eligible professional service practitioners who are employed by a physician group affiliated with Tulane University School of Medicine located in the city of New Orleans may qualify for supplemental payments for services rendered to Medicaid recipients. To qualify for the supplemental payment, the physician or professional service practitioner must be:

1. licensed by the state of Louisiana;
2. enrolled as a Louisiana Medicaid provider; and
3. identified by Tulane University School of Medicine as a physician or other professional service practitioner that is employed by, or under contract to provide services for that entity.

B. The following professional services practitioners shall quality to receive supplemental payments:

1. physicians;
2. physician assistants;
3. certified registered nurse practitioners; and
4. certified registered nurse anesthetists.

C. The supplemental payment shall be calculated in a manner that will bring payments for these services up to the community rate level.

1. For purposes of these provisions, the community rate shall be defined as the rates paid by commercial payers for the same service.

D. The private physician group shall periodically furnish satisfactory data for calculating the community rate as requested by the department.

E. The supplemental payment amount shall be determined by establishing a Medicare to community rate conversion factor for the private physician group. At the end of each quarter, for each Medicaid claim paid during the quarter, a Medicare payment amount will be calculated and the Medicare to community rate conversion factor will be

applied to the result. Medicaid payments made for the claims paid during the quarter will then be subtracted from this amount to establish the supplemental payment amount for that quarter.

F. The supplemental payments shall be made on a quarterly basis and the Medicare to community rate conversion factor shall be recalculated at least every three years.

AUTHORITY NOTE: Promulgated in accordance with R.S. 36:254 and Title XIX of the Social Security Act.

HISTORICAL NOTE: Promulgated by the Department of Health and Hospitals, Bureau of Health Services Financing, LR 38:1964 (August 2012).

Implementation of these provisions of this Rule may be contingent upon the approval of the U.S. Department of Health and Human Services, Centers for Medicare and Medicaid Services (CMS), if it is determined that submission to CMS for review and approval is required.

Bruce D. Greenstein
Secretary

1208#117

RULE

Department of Health and Hospitals
Licensed Professional Counselors Board of Examiners

License of Title for Marriage and Family
Requirements for Licensure
(LAC 46:LX. 3309, 3311, 3315, 3317, 3319, and 3321)

In accordance with R.S. 49:950 et seq., of the Louisiana Administrative Procedures Act, as well as R.S. 37:1101 and 37: 1122, the Louisiana Licensed Professional Counselors Board of Examiners has adopted rules and amended its existing rules and regulations, by revising LAC 46:LX.Chapter 33. These revisions and additions are, in part, necessary to correct previously promulgated rules needed to implement Act 613 of the 2010 Regular Session of the Louisiana Legislature. Additionally, new rules are needed for the board to adequately regulate the supervision of MFT Interns. Specifically, the Licensed Professional Counselors Board of Examiners has amended Sections 3309, 3311, and 3315 and added Sections 3317, 3319, and 3321.

Title 46
PROFESSIONAL AND OCCUPATIONAL STANDARDS
Part LX. Licensed Professional Counselors Board of Examiners
Subpart 2. Professional Standards for Licensed Marriage and Family Therapists
Chapter 33. Requirements for Licensure
§3309. Academic Requirements for MFT Licensure [Formerly §3311]

A. The board upon recommendation of the advisory committee shall register a person for MFT internship who applies on the required application forms, completed as the board prescribes and accompanied by the required fee. Additionally, applicants must meet one of the four following academic options:

1. ...

2. a master's or doctoral degree in marriage and family therapy or marriage and family counseling from a program accredited by the Council for Accreditation of Counseling and Related Educational Programs (CACREP) in a regionally accredited educational institution with a minimum of six courses in marriage and family therapy, including coursework on the AAMFT Code of Ethics. The degree must include:

a. a minimum of 500 supervised direct client contact hours, with a minimum of 250 of these 500 hours with couples and/or families;

b. a minimum of 100 hours of face to face supervision. The training of the supervisor shall be substantially equivalent to that of an AAMFT approved supervisor as determined by the advisory committee;

3. a master's or doctoral degree in marriage and family therapy or a related clinical mental health field from a regionally accredited institution of higher education or a certificate from a postgraduate training institute in marriage and family therapy. The qualifying degree or certificate program must include coursework, practicum, and internship in marriage and family therapy that is determined by the advisory committee to be substantially equivalent to a graduate degree or post-graduate certificate in marriage and family therapy from a program accredited by COAMFTE. To be considered substantially equivalent, qualifying degrees or post graduate certificates must include:

a. a minimum of 60 semester hours of coursework;

b. a minimum of 500 supervised direct client contact hours, with a minimum of 250 hours of these 500 hours with couples and/or families;

c. a minimum of 100 hours of face-to-face supervision. The training of the supervisor shall be substantially equivalent to that of an AAMFT approved supervisor as determined by the advisory committee;

4. a master's degree or a doctoral degree in marriage and family therapy from a regionally accredited institution of higher education whose program and curriculum was approved by the board through the advisory committee at anytime prior to July 1, 2010. The master's or doctoral degree for this option must include:

a. a minimum of 500 supervised direct client contact hours, with a minimum of 250 hours of these 500 hours with couples and/or families;

b. a minimum of 100 hours of face-to-face supervision. The training of the supervisor must be substantially equivalent to that of an AAMFT approved supervisor as determined by the advisory committee.

B. Required coursework in marriage and family therapy for academic options 2 and 3 may be completed during the qualifying master's or doctoral degree programs or may be taken as post-graduate work at a regionally accredited college, university, or qualifying postgraduate marriage and family therapy training institute as determined by the advisory committee.

AUTHORITY NOTE: Promulgated in accordance with R. S. 37:1101-1122.

HISTORICAL NOTE: Promulgated by the Department of Health and Hospitals, Licensed Professional Counselors Board of Examiners, LR 29:156 (February 2003), amended LR 29:2785

(December 2003), LR 35:1113 (June 2009), LR 37:1602 (June 2011), repromulgated LR 37:2163 (July 2011), amended LR 38:1965 (August 2012).

§3311. Coursework and Academic Supervision Requirements, for Academic Options 2, 3, and 4

A. - A7. ...

8. The applicant must document that all required graduate and postgraduate coursework was presented from a family systems perspective. Coursework will specify how marriage and family therapists apply psychotherapeutic and family systems theories and techniques in the delivery of professional psychotherapeutic services to individuals, couples, families, and groups for the purpose of assessment, treatment planning, and treatment of mental, intellectual, emotional, or behavioral disorders and apply family systems theories, assessment, and techniques in their professional consultation work with organizations.

9. Up to 220 of the required 500 hours of supervised direct client contact and 44 of the required 100 hours of face-to-face supervision not completed during a practicum and/or internship during the completion of the qualifying degree program or postgraduate training institute may be completed once an applicant has registered as a MFT intern and is under the supervision of a LMFT board approved supervisor. These hours shall be added to the required 2000 hours of supervised direct client contact required for licensure.

B. Specific Coursework Requirements—Option 3

1. Academic Course Content. An applicant with a master's or doctoral degree in marriage and family therapy or a related clinical mental health field from programs not accredited by the COAMFTE or with a certificate from a postgraduate training institute in marriage and family therapy not accredited by the COAMFTE must have the specified coursework in each of the following areas (one course equals three semester hours or its equivalent as defined in Paragraph A.3 of this Section.

a. Theoretical Knowledge of Marriage and Family Therapy—minimum of two courses. Courses in this area shall provide academic instruction in the historical development, empirical foundations, and contemporary conceptual directions of the field of marriage and family therapy. Coursework shall provide a comprehensive survey and substantive understanding of the systems paradigm, family therapy theory, and the major models of marriage, couple, and family therapy practice. Overview courses in which systems theory is surveyed equally as one of several theories do not qualify for this area.

b. Clinical Knowledge of Marriage and Family Therapy—minimum of four courses. Courses in this area shall provide academic instruction in clinical intervention as it relates to family systems theory. Coursework shall highlight clinical practice in couples and family therapy in relation to cultural and racial diversity, gender, sexual functioning/orientation, violence, addiction, abuse and other relevant issues. Coursework shall focus on the treatment of individuals, couples, and families from a systemic/relational perspective and in response to a wide variety of presenting problems.

c. Assessment and Treatment in Marriage and Family Therapy—minimum of two courses. One course must be in psychopathology. Courses in this area shall provide academic instruction from a systemic/relational perspective in psychopharmacology, physical health and illness, traditional psycho diagnostic categories including the use of the Diagnostic and Statistical Manual of Mental Disorders and the assessment and treatment planning for the treatment of mental, intellectual, emotional, or behavioral disorders within the context of marriage and family systems.

d. Individual, Couple, and Family Development—minimum of one course. Courses in this area shall provide academic instruction in individual, couple, and family development across the lifespan.

e. Professional Identity and Ethics—minimum of one course. Courses in this area shall provide academic instruction in the development of professional identity, ethical and legal issues, scope of practice, professional membership, certification, and licensure. Coursework shall focus on ethical and legal issues related to the practice of marriage and family therapy, including but not limited to the AAMFT Code of Ethics, confidentiality, legal responsibilities and liabilities of clinical practice and research, family law, record keeping, reimbursement, the business aspects of practice, and familiarity with regional and federal laws as they relate to the practice of individual, couple and family therapy. Generic courses in ethics do not meet this standard.

f. Research—minimum of one course. Courses in this area shall provide academic instruction in the understanding and performance of research. Coursework shall focus on content such as research methodology, data analysis, research evaluation, and quantitative and qualitative research.

g. Additional Learning—minimum of one course. Courses in this area will augment students' specialized interest and background in individual, couple, and family therapy and may be chosen from coursework offered in a variety of disciplines.

2. Academic Supervision—as part of their degree program, an applicant must have completed 500 supervised face-to face direct client contact hours with individuals, couples, families, and/or groups from a systemic/relational perspective with 100 hours of face-to-face supervision. At least 250 of these hours must be with couples or families present in the therapy room. If a student is simultaneously being supervised and having direct client contact, the time may be counted as both supervision time and direct client contact time.

AUTHORITY NOTE: Promulgated in accordance with R. S. 37:1101-1122.

HISTORICAL NOTE: Promulgated by the Department of Health and Hospitals, Licensed Professional Counselors Board of Examiners, LR 37:1602 (June 2011), repromulgated LR 37:2163 (July 2011), amended LR 38:1966 (August 2012).

§3315. Requirements for the Registration and Supervision of MFT Interns

A. General Provisions

1. The board, upon recommendation of the advisory committee, shall grant those persons who make formal application and satisfactorily meet all the requirements of this Rule the position of registered MFT intern.

2. Persons who apply to the board for qualification as a MFT intern must meet the specified degree requirements

and must successfully complete a minimum of two years of work experience in marriage and family therapy as specified in Section 3315 C.1 under qualified supervision as determined by the advisory committee and approved by the board. Upon qualification, the MFT intern shall be considered an applicant in process for licensure as a LMFT.

3. A member of the advisory committee who has functioned as a board-approved supervisor for a person making application for licensure as a LMFT or certification as a board-approved supervisor shall not participate in deliberations in regard to or vote on the approval of said applicant.

B. Definitions for Supervision

Consultation—a voluntary relationship between professionals of relatively equal expertise or status wherein the person being consulted offers advice or information on an individual case or problem for use by the person asking for assistance. The consultant has no functional authority or legal or professional responsibility for the consultee, the services performed by the consultee, or the welfare of the consultee's client. Consultation is not supervision. Experience under contract for consultation will not be credited toward fulfillment of supervision requirements of MFT interns or supervisor candidates.

Co-Therapy Supervision—qualified supervision that takes place during a therapy session in which the LMFT board-approved supervisor acts as a co-therapist with the MFT intern.

Direct Work Experience—psychotherapeutic services delivered face-to-face to individuals, couples, families, or groups in a setting and in a manner approved by the advisory committee as part of the intern's plan of supervision.

Group Supervision—qualified supervision of more than two and no more than six MFT interns with one or more board-approved supervisors. Group supervision provides the opportunity for the supervisee to interact with other supervisees and offers a different learning experience than that obtained from individual supervision.

Indirect Work Experience—collateral services rendered to clients that relate to proper case management, such as telephone contact, case planning, observation of therapy, record keeping, travel, administrative activities, consultation with community members or professionals, or supervision.

Individual Supervision—qualified supervision of one or two individuals by one LMFT board-approved supervisor.

Live Supervision—individual and/or group supervision in which the supervisor directly observes the case while the therapy is being conducted and has the opportunity to provide supervisory input during the session. When a supervisor conducts live supervision the time is counted as individual supervision for up to two interns providing therapy in the room with the client(s) and for up to two interns observing the therapy and interacting with the supervisor. The time is counted as group supervision when more than two MFT interns involved in direct client contact or more than two observers interacting with the supervisor are present, providing that there are no more than six interns involved.

LMFT Board-Approved Supervisor—an individual who has made formal application for certification as an LMFT board-approved supervisor documenting that he or she has satisfactorily met the standards specified in the Rule for LMFT board-approved supervisors as determined by the advisory committee and has received a letter from the board certifying them as such. Under no circumstances may an LMFT board-approved supervisor be related to by birth or marriage, live in the same household with, be an employee of, or maintain any other relationship with the MFT intern that may be considered a dual relationship which may impede the LMFT board-approved supervisor from effectively providing for the professional development of the intern and monitoring the ethical and professional quality of the intern's service delivery to clients. During the course of the supervisory process, The LMFT board-approved supervisor maintains an appropriate level of responsibility for the intern's delivery of services and provides an accurate and true representation to the public of those services and the supervisor/supervisee relationship. A LMFT board-approved supervisor may use the initials LMFT-S for licensed marriage and family therapy supervisor after his or her name. Henceforth, the LMFT board-approved supervisor will be called the approved supervisor or the supervisor.

LMFT Registered Supervisor Candidate—an individual who has made formal application for registration as a LMFT registered supervisor candidate documenting that he or she has satisfactorily met the standards specified in the Rule for LMFT-registered supervisor candidate as determined by the advisory committee and has received a letter from the board indicating their registration as such. The candidate is under the supervision of an LMFT board-approved supervisor for the purpose of certifying as an LMFT board-approved supervisor in accordance with the plan of supervision-of-supervision approved by the advisory committee. The LMFT registered supervisor candidate performs the same duties as and is responsible to maintain a level of care for supervisees that meets the standards for LMFT board-approved supervisors as defined in this Rule. The LMFT registered supervisor candidate at the successful completion of the supervision-of-supervision process must make formal application to the board for qualification as an LMFT board-approved supervisor. A LMFT registered supervisor candidate may use the initials LMFT-SC after his or her name. Any portion of the Rule that applies to board-approved supervisors will also be considered to apply to supervisor candidates except where specifically noted. The LMFT registered supervisor candidate (LMFT-SC) will henceforth be called the supervisor except in instances that pertain only to candidates, where the terms supervisor candidate or candidate will be used.

Qualified Supervision—supervision of the clinical services of a MFT intern by a board-approved supervisor or supervisor candidate for the purpose of qualifying the intern for licensure as a LMFT in Louisiana in accordance with the plan of supervision approved by the advisory committee. Under no circumstances shall any contact that is not face-to-face (such as interaction by conventional correspondence, telephone, e-mail, instant message, video conference, etc.) between an LMFT board-approved supervisor or supervisor candidate and a MFT intern be considered qualified supervision unless such contact is pre-approved by the advisory committee as part of the intern's plan of supervision.

a. Administrative supervision conducted to evaluate job performance or for case management rather than the

clinical supervision of therapy provided to clients shall not be considered qualified supervision.

b. Any didactic process wherein techniques or procedures are taught in a group setting, classroom, workshop, or seminar shall not normally be considered qualified supervision. If, however, the board-approved supervisor deems such experience as necessary to the intern's successful completion of his or her internship, such experience may be included in the intern's plan of supervision. Approval of such experience as qualified supervision will be at the discretion of the advisory committee.

c. Consultation, staff development, or orientation to a field program, or role-playing of family interrelationships as a substitute for current clinical practice shall not be considered as qualified supervision.

Registered MFT Intern—an individual who has made formal application for registration as a registered MFT intern documenting that he or she has satisfactorily met the standards specified in the Rule for registered MFT interns as determined by the advisory committee and who has received a letter from the board indicating their registration as such. A registered MFT intern may use the initials MFT-I after his or her name. It is the responsibility of the registered MFT intern to comply with this Rule and board policy in the provision of services to their clients during their internship. It is also the registered MFT intern's responsibility to offer reasonable compliance to the plan of supervision and to the directives and suggestions of their supervisor as they are consistent with law, ethics, statutes, and board policy. It is the primary responsibility of the intern to ensure that he or she has a thorough, current knowledge of his or her legal, ethical, and professional responsibilities and that his or her behavior is in compliance with ethical and legal requirements. Henceforth, the registered MFT intern will be called the MFT intern or in some instances the intern.

Supervision—the professional relationship between a supervisor and supervisee that nurtures the professional self of the supervisee, promotes the development of the supervisee's therapeutic knowledge and skill, contributes to the supervisee's development of sound ethical judgment, and reasonably ensures that the therapeutic services delivered by the supervisee meet a minimum standard of clinical and ethical quality. The supervisor provides guidance and instruction that is of such quality, frequency, and regularity that the clinical and professional development of the supervisee is promoted and the supervisee's service delivery is adequately monitored. Supervision involves the clinical review of the therapist's work with clients that may utilize therapist self-report and review of clinical documentation, review of audiotapes or videotapes, or direct observation of live therapy sessions.

The Plan of Supervision for MFT Interns—a written agreement between the board-approved supervisor and the MFT intern that establishes the supervisory framework for the postgraduate clinical experience of the intern and describes the expectations and responsibilities of the board-approved supervisor and the MFT intern as supervisee. It is the responsibility of the MFT intern to submit the plan of supervision to the advisory committee in a manner consistent with advisory committee policy.

The Plan of Supervision-of-Supervision for Supervisor Candidates—a written agreement between the board-approved supervisor and the supervisor candidate that establishes the framework for the supervision-of-supervision of a licensed marriage and family therapist who is training to become an LMFT board-approved supervisor and that describes the expectations and responsibilities of the supervisor and the supervisee. It is the responsibility of the supervisor candidate to submit a plan of supervision-of-supervision to the advisory committee in a manner consistent with advisory committee policy. Henceforth, the plan of supervision-of-supervision for supervisor candidates shall be called the plan of supervision-of-supervision.

C. MFT Intern Supervision Requirements for Licensure

1. A MFT intern must complete an internship under the supervision of a board-approved supervisor or registered supervisor candidate that consists of qualified post-graduate work experience in marriage and family therapy and that includes at least 3,000 hours of clinical services to individuals, couples, families, or groups.

a. At least 2,000 hours must qualify as direct work experience. Up to 500 hours of direct work experience received during the completion of a graduate program that is systemically oriented as determined by the advisory committee may be counted toward the required 2000 hours. If the applicant's academic practicum or internship is from another institution other than that of their qualifying degree, then the internship or practicum supervisor must have possessed training substantially equivalent to that of an approved LMFT supervisor and the supervision must have been conducted from a systemic perspective as determined by the advisory committee.

b. The remaining 1,000 hours may be indirect work experience or other professional activities that may include but are not limited to qualified supervision, workshops, public relations, administrative tasks, consulting with referral sources, etc. as approved by the advisory committee.

c. The intern shall complete his or her internship in not less than two and no more than seven years from the date the intern is registered with the board.

d. Applicants for registration as MFT interns shall not provide psychotherapeutic services to clients unless they have received an official letter from the board qualifying them to do so or unless some other qualifying mental health license allows them to deliver such services. To continue employment in a clinical setting post graduation, applicants who have graduated with qualifying degrees have 60 days from their date of graduation to apply for registration.

2. The internship must include at least 200 hours of qualified supervision, of which at least 100 hours must be individual supervision. The remaining 100 hours may be group supervision.

a. Up to 100 hours of face-to-face supervisor contact received during the completion of the applicant's qualifying academic experience graduate program that is systemically oriented as determined by the advisory committee may be counted toward the required 200 hours of

qualified supervision. Of this 100 hours, only 50 hours may be counted as individual supervision.

3. The intern's plan of supervision must reflect that the intern is receiving supervision in the application of systemically based approaches to therapy with all clients.

4. The intern may begin accruing client- and supervisor-contact hours only after the intern has received an official letter of registration from the board.

5. The intern will be granted a change of approved supervisors or an additional approved supervisor only upon the approval of appropriate documentation as determined by the advisory committee.

a. In the event of a change or addition of supervisor(s), the intern must submit sections 2 and 3 of the MFT intern registration form for each proposed supervisor. Supervision with the new supervisor is not approved until the intern receives a letter from the board approving the new supervisor and plan of supervision.

b. A change of supervisors or additional supervisor(s) will not be approved until all of the intern's existing supervisor(s) have submitted a documentation of experience form for the intern in accordance with advisory committee policy.

6. Final approval of the intern's supervised work experience toward licensure shall be at the discretion of the advisory committee and only upon recommendation of the board-approved supervisor(s).

C.7. - D.4.d. ...

AUTHORITY NOTE: Promulgated in accordance with R.S. 37:1101-1122.

HISTORICAL NOTE: Promulgated by the Department of Health and Hospitals, Licensed Professional Counselors Board of Examiners, LR 29:158 (February 2003), amended LR 29:2787 (December 2003), LR 35:1114 (June 2009), LR 38:1966 (August 2012).

§3317. Qualification of the Board-Approved Supervisor and Registered Supervisor Candidate

A. General Provisions

1. The board, upon recommendation of the advisory committee, shall grant those persons that make formal application and satisfactorily meet all the requirements of this Rule the position of board-approved supervisor or registered supervisor candidate.

2. The applicant for certification as a board-approved supervisor or registration as a supervisor candidate shall have maintained an active license in good standing as a LMFT for a minimum of two years.

3. The applicant who has an unresolved or outstanding complaint or who is under a consent order or participating in a plan of discipline as a mental health professional must indicate this on his or her formal application and shall be granted board-approved supervisor or supervisor candidate's status only at the discretion of the advisory committee.

B. Requirements For Certification as a Board-Approved Supervisor

1. Applicants for certification as a LMFT board-approved supervisor must make formal application to the board in accordance with advisory committee policy demonstrating that he or she has satisfactorily met the following requirements.

a. Experience Requirements. While maintaining a license in good standing as a LMFT, the applicant must have completed a minimum of two years of professional experience as a marriage and family therapist working with individuals, couples, families or groups from a systemic perspective or working as an academic clinical supervisor utilizing a systemic orientation as determined by the advisory committee.

b. Coursework Requirements. The applicant must have completed:

i. a one-semester graduate course in marriage and family therapy supervision from a regionally accredited institution; or

ii. an equivalent course of study consisting of a 15-hour didactic component and a 15-hour interactive component in the study of marriage and family therapy supervision approved by the advisory committee. The interactive component must include a minimum of four persons.

c. Supervision-of-Supervision Requirements. The applicant must have completed 36 hours of supervision-of-supervision of marriage and family therapy with the oversight of a designated board-approved supervisor as determined by the advisory committee. Registered supervisor candidates may not qualify to provide supervision-of-supervision to other registered supervisor candidates.

d. The applicant for the position of LMFT board-approved supervisor who is not registered as a supervisor candidate may not begin qualified supervision of MFT interns until receipt of an official approval letter from the board as a LMFT board-approved supervisor.

4. Applicants for certification as a board-approved supervisor must submit with their application for certification a nonrefundable application fee of $100.

5. Designation as an AAMFT board-approved supervisor may qualify a person to become an LMFT board-approved supervisor. AAMFT supervisors must make application to the board in accordance with advisory committee policy in order to certify as board-approved supervisors. AAMFT supervisors who have not certified to be LAMFT board-approved supervisors shall not supervise MFT interns. Supervision provided by an AAMFT supervisor who has not received certification from the board qualifying them as a LMFT board-approved supervisor shall not count toward licensure.

6. The board-approved supervisor shall attend a LMFT board-approved supervisor's orientation approved by the advisory committee within one year of the board-approved supervisor's date of certification. This orientation may also be counted as continuing education toward the board-approved supervisor's licensure renewal as a marriage and family therapist.

a. Board-approved supervisors who fail to meet this requirement within one year of their initial certification as board-approved supervisors will not be approved for new supervisees until the requirement is met. Failure to meet this requirement within two years of the date of approval may result in the suspension of approved supervisor status.

b. This requirement may be met during the supervisor candidate's supervision-of-supervision. If the candidate elects to do so, the orientation hours may count toward the continuing education requirements for renewal of his or her LMFT license.

C. Requirements for Registration as a Registered Supervisor Candidate

1. The applicant for registration as a LMFT registered supervisor candidate must submit to the board a formal application and a plan of supervision-of-supervision in accordance with advisory committee policy.

a. The registered supervisor candidate's supervision-of-supervision must include:

i. a minimum of two MFT students or MFT interns supervised for a minimum of nine months each;

ii. at least 90 hours of supervision of approved supervisees. These 90 hours of supervision must be completed in no less than one year and no more three years with the oversight of his or her designated board-approved supervisor.

b. The applicant for registration as a LMFT registered supervisor candidate shall not supervise MFT interns or begin accruing supervisor or supervisee contact hours toward his or her certification as a board-approved supervisor until he or she has received an official letter from the board approving his or her registration as a supervisor candidate.

2. The registered supervisor candidate who has successfully completed his or her plan of supervision-of-supervision must make formal application in accordance with advisory committee policy to be considered for certification as a board-approved supervisor.

3. Final approval of the approved supervisor candidate's supervised work experience toward certification as an approved supervisor shall be at the discretion of the advisory committee and only upon recommendation of the candidate's board-approved supervisor(s).

D. Renewal of Certification as a Board-Approved Supervisor

1. The board-approved supervisor shall renew his or her board certification to supervise MFT interns every four years. Supervisors will receive a renewal announcement from the board providing them with their required renewal date and will receive a renewal notice every four years thereafter.

2. To qualify for renewal, board-approved supervisors must:

a. maintain an active LMFT license in good standing as defined by this Rule. Applicants for renewal of their board-approved supervisory status that are under a consent order as a licensee may be renewed only at the discretion of the advisory committee.

b. complete six clock hours of continuing education in clinical MFT supervision prior to each renewal date for current renewal period. These continuing education hours may also count toward the board-approved supervisor's renewal requirements for licensure as a LMFT;

i. Continuing education for board-approved supervisors must be specifically relevant to the renewal candidate's role as clinical supervisor of MFT interns as determined by the advisory committee. The content of workshops and seminars that qualify for continuing education credit for renewal candidates may be in theories and techniques of MFT supervision as well as ethical and legal issues related to MFT supervision, case management, or topics relative to a specific supervised setting.

ii. Requirements otherwise applicable to continuing education hours for board-approved supervisors are the same as continuing education hours required for maintenance of the supervisor's LMFT license as defined in these rules.

c. successfully complete the board-approved orientation workshop for supervisors. The orientation shall not count toward the required six hours of required continuing education for board-approved supervisors;

d. submit a completed board-approved supervisor renewal application along with any updates to the supervisor's statement of practice in accordance with advisory committee policy;

e. remit a renewal fee of $100.

3. After the renewal candidate has successfully completed the above requirements, the board upon recommendation of the advisory committee shall issue a document renewing the supervisor's board certification for a term of four years.

a. The board approval of any board-approved supervisor who fails to meet renewal requirements shall lapse; however, the failure to renew said approval shall not deprive said supervisor the right of renewal thereafter.

b. Board-approved supervisors who do not renew their board-approved supervisor's status will not be approved for new MFT interns until the board-approved supervisor has renewed his or her supervisory approval or has successfully reapplied for board-approved supervisor status.

c. A board-approved supervisor who has allowed his or her board-approved supervisor status to lapse may renew within a period of two years after the expired renewal date upon payment of all fees in arrears and presentation of evidence of completion of the continuing education and orientation requirements.

d. Upon late renewal or reapplication, the board-approved supervisor's four-year renewal cycle will begin on his or her nearest licensure renewal date to the supervisor's renewal/reapproval.

e. Application for renewal after two years from the date of expiration will not be considered for renewal. Applicants whose supervisor status has lapsed for two years or more must re-apply for certification as a board-approved supervisor under current requirements.

f. Failure to renew or reapply for board approved supervisory status does not necessarily impact the supervisor's right or ability to renew or reapply as a LMFT.

AUTHORITY NOTE: Promulgated in accordance with R.S. 37: 1102, 1103, and 1116.

HISTORICAL NOTE: Promulgated by the Department of Health and Hospitals, Licensed Professional Counselors Board of Examiners, LR 38:1969 (August 2012).

§3319. Responsibilities of the MFT Intern

A. General Responsibilities

1. The MFT intern is responsible to be thoroughly aware of his or her legal, ethical, and professional responsibilities as an intern and to maintain a level of care for clients that meets the standards for licensed marriage and family therapists as described in this Rule.

2. The MFT intern is responsible to meet with the board-approved supervisor(s) for qualified supervision in the manner prescribed in the plan of supervision. The MFT

intern must receive qualified supervision at a minimum frequency of two supervisor-contact hours a month.

3. The MFT intern is responsible to collaborate with his or her approved supervisor(s) in order to develop and submit to the advisory committee a plan of supervision as defined in Section 3315.B.

4. It is the responsibility of the intern to immediately report to the approved supervisor(s), the intern's employer or contractor, and the board any changes in the intern's status (loss of employment, change of job status, serious illness, legal difficulty, etc.) that significantly affect the intern's continued qualification as a MFT intern, due qualification as a LMFT, ability to meet the terms of the plan of supervision, or ability to provide the standard of care to clients as defined in this Rule.

a. The intern shall report to the approved supervisor(s) and the board within thirty days any change in status that would affect the ability of the supervisor or the board to contact the intern, such as changes in postal address, telephone number, or e-mail address.

b. As the board-approved supervisor has knowledge, he or she shall ensure that the intern reports such changes in status to the board in accordance with advisory committee policy.

c. The intern is responsible to collaborate with his supervisor(s) over the course of his or her internship to develop, maintain, and fulfill a plan of supervision that meets the developmental needs of the intern, provides for an appropriate level of professional care for the intern's clients, allows for the adequate monitoring of the intern's practice by the board-approved supervisor(s) or supervisor candidate, and allows for the intern's timely qualification as a LMFT.

d. It is the responsibility of the intern to submit amendments to the plan of supervision to the advisory committee within thirty days for approval in accordance with advisory committee policy.

5. The MFT intern is responsible to meet with the approved supervisor(s) with a regularity, frequency, and manner prescribed by the board-approved plan of supervision.

a. The intern shall inform the board in writing within 30 days in accordance with advisory committee policy in the event that the intern's supervisor becomes unwilling or unable to fulfill his or her responsibility to the intern as defined in the board-approved plan of supervision.

b. In the event that an approved supervisor becomes unwilling or unable for any reason to fulfill the duties as a qualified supervisor, the advisory committee shall assist this supervisor's interns according to advisory committee policy in acquiring interim supervision until a suitable board-approved supervisor can be located in order to preserve continuity of care for the intern's clients.

c. Should an interim supervisor not be located in a timely manner as determined by the advisory committee, the intern must suspend services to clients until such time as a new supervisor can be located. In such circumstances it is the responsibility of the intern to work with his administrative supervisor to see that his clients are appropriately referred.

6. The intern is responsible to be thoroughly aware of the terms of his or her employment as an employee or private contractor as well as the administrative policies and procedures of his employer and/or administrative supervisor.

a. In the event that the standard of professional behavior and/or client care provided by the intern's employer or administrative supervisor exceeds that of the minimum standards in this Rule, the intern should to the best of his ability adhere to the higher standard.

b. In the event that a conflict between the policies, procedures, or directives of the intern's employer or administrative supervisor impedes the ability of the intern to comply with the directives of the intern's board-approved supervisor(s), the terms of the intern's plan of supervision, or the standard of professional behavior described in this Rule, the intern shall inform his or her approved supervisor(s) immediately.

7. The intern must refrain from the ownership of all or part of any mental health counseling practice and from acceptance of any direct fee for service from therapy clients. The intern may receive a wage for services rendered as an employee or as a private contractor. Should the intern receive monetary compensation as a private contractor for services for which his status as an intern qualifies him, the contractual agreement under which the intern receives compensation must specify a person who functions in the workplace as an administrative on-site supervisor for the intern in his delivery of services under the contract.

B. Specific Responsibilities of the MFT Intern to the Approved Supervisor. It is the responsibility of the MFT intern to:

1. follow to the best of the intern's ability the clinical suggestions and directives of the supervisor as the supervisor's suggestions and directives are consistent with the ethical, legal, and professional standards provided in this Rule as determined by the advisory committee;

2. provide the supervisor with adequate information about his or her clinical work with clients such that the supervisor can monitor the intern's clinical practice and assist the intern in maintaining an appropriate standard of care for all clients. The intern shall provide his supervisor(s) with reasonable access to all written or electronic documentation that relates to the intern's provision of therapeutic services to his clients;

a. The intern shall inform the supervisor(s) immediately in the event that the intern believes that a client has committed or is a risk for suicide, homicide, or any other seriously harmful behavior to self or others or is the perpetrator of abuse to a minor, elderly, or disabled person.

b. The intern's reporting such information as described in Subparagraph B.2.a of this Section to the supervisor is not a substitute for the intern's preeminent obligation to report directly to appropriate authorities in circumstances in which the law or ethics requires the mandatory reporting of suspected abuse or imminent personal risk.

3. earnestly endeavor to resolve with the intern's supervisor(s) any personal or professional conflict that may hinder the intern in collaborating with supervisor(s) in the

provision of an appropriate standard of care to clients, successfully completing the terms of the plan of supervision, or successfully qualifying for licensure as a LMFT;

a. In the event that such conflict cannot be resolved in a timely manner, the intern shall request assistance in writing from the advisory committee in accordance with advisory committee policy.

b. The intern will accept as final any plan to resolve such conflict upon recommendation of the advisory committee as approved by the board.

4. in the event of multiple supervisors, the intern will immediately inform the supervisor(s) if the clinical directives or ethical guidance of one supervisor seem to significantly conflict with another such that the intern is impeded in providing an appropriate level of client care. In the event that such conflict cannot be resolved in a timely manner, the intern or the supervisor(s) may request assistance in writing from the advisory committee in accordance with advisory committee policy.

C. Revocation, Suspension, or Limitation of the Terms of the Registration of the registered MFT intern.

1. The board upon recommendation of the advisory committee may withhold, deny, revoke, suspend or otherwise limit the terms of the registered status of a MFT intern on a finding that the intern has violated any of the rules, regulations, or ethical standards for licensed marriage and family therapists as pertains to the supervision of MFT interns contained in this Rule or prior final decisions and/or consent orders involving the MFT intern.

2. The advisory committee shall provide due notice to the intern's designated approved supervisor(s) of any change or potential change in the intern's qualification as a MFT intern in accordance with advisory committee policy.

3. The approved supervisor(s) of an intern whose registration as an MFT intern has been revoked, suspended, or otherwise limited shall immediately inform his administrative or site supervisor(s) of the intern's of change in status.

AUTHORITY NOTE: Promulgated in accordance with R.S. 37: 1102, 1103, and 1116.

HISTORICAL NOTE: Promulgated by the Department of Health and Hospitals, Licensed Professional Counselors Board of Examiners, LR 38:1970 (August 2012).

§3321. Responsibilities of the LMFT Board-Approved Supervisor and Registered Supervisor Candidate

A. General Responsibilities

1. It is the primary function of supervisors in their relationships with their supervisees to protect the welfare of the public in every circumstance. Supervisors work with the board and their interns to protect the right of every client to ethical, professional treatment. Henceforth, any portion of the Rule that applies to board-approved supervisors will also be considered to apply to supervisor candidates except where specifically noted.

a. The supervisor shall maintain a current knowledge of and represent accurately to interns and to the public the process of qualification of MFT interns for licensure.

b. The supervisor shall manage all information pertaining to the clients of the intern with the same level of confidentiality mandated in this Rule for licensed marriage and family therapists as in their interaction with their own clients.

c. The supervisor shall, to the best of his ability and knowledge, address in an accurate, timely fashion any reasonable question or concern directed to the supervisor by clients of the intern about the professional status of the intern or the quality of care being provided to the client by the intern.

d. In the event that the client of an intern makes a complaint or provides information to the supervisor that the intern may have committed a breach of the minimum standards of client care provided in this Rule resulting in harm or potential harm to the client, it is the responsibility of the supervisor to provide corrective feedback to the intern, warn the client of potential risk, and report the actions of the intern to the board in accordance with advisory committee policy.

2. A supervisor may not have more than a combined total of 10 supervisees, including MFT interns and interns in other disciplines and/or registered supervisor candidates.

3. The supervisor is responsible for assisting the intern in developing and maintaining the plan of supervision and monitoring the timely submission of appropriate documentation to the board on behalf of the intern.

4. The supervisor shall provide qualified supervision to the intern until the supervisor has received official notice from the board that the intern has licensed as a LMFT, been officially assigned by the board to another supervisor, or has otherwise lost or forfeited qualification as an MFT intern. Nonpayment of the supervisor's fees by the intern is not grounds for the suspension by the supervisor of supervisory meetings with the intern as specified by the board-approved plan of supervision.

5. It is the responsibility of the supervisor to immediately report to the board and his designated interns and/or supervisees in accordance with advisory committee policy any changes in his status (loss of employment, serious illness, legal problems, etc.) that may significantly affect his certification as an approved supervisor or supervisor candidate or his ability as an approved supervisor to fulfill his duties as described in this Rule or in the plan of supervision/plan of supervision-of-supervision. The supervisor shall within thirty days also report to the board any change in status that may affect the ability of the board to contact him or her (change of address, telephone number, e-mail address, etc.).

6. As he has knowledge, the supervisor shall ensure that the intern reports such changes in status to the board in accordance with advisory committee policy that would affect the ability of the supervisor or the board to contact the intern, such as changes in postal address, telephone number, or e-mail address.

7. It is the responsibility of the supervisor to supervise interns within his or her scope of practice. The supervisor shall not present himself as providing supervision in any particular therapeutic approach, technique, or theoretical orientation in which the supervisor has not been thoroughly trained and had adequate experience to provide competent supervision as determined by the advisory committee.

8. It is the responsibility of the supervisor to observe the practice of the intern through clinical case review, real-time observation of the intern's sessions, or by reviewing

session video- or audio-tapes such that the supervisor is sufficiently able to monitor the practice of the intern and guide the intern in maintaining the minimum standard of care for his clients defined in this Rule and the plan of supervision.

a. The supervisor shall ensure that the regularity, duration, and quality of supervision sessions are adequate to provide continuity, support, and nurturance to the intern and to monitor the professional quality of the intern's service provision to clients.

b. The supervisor shall provide timely, accurate feedback to the intern, the intern's other supervisors, and the advisory committee in accordance with advisory committee policy in regard to the professional developmental of the intern, his or her progress in completing the plan of supervision, or any other information that relates to the intern's ability to provide adequate care to clients.

c. When a supervisor receives information that suggests that the behavior of an intern may present a clear and significant threat to the welfare of a client, it is the responsibility of the supervisor to immediately provide corrective feedback to the intern.

d. In the event of Subparagraph A.8.c of this Section and if the supervisor determines that the intern has failed to respond appropriately by acting to protect the welfare of the client, it is the responsibility of the supervisor to immediately report the behavior of the intern to the board according to advisory committee policy and immediately inform the client of the potential risk. The supervisor should use his clinical judgment in such matters, balancing his or her roles as mentor to the intern and protector of the public with protection of the public preeminent.

9. The supervisor shall keep true, accurate, and complete records in accordance with advisory committee policy of his or her interactions with interns and their clients and respond within 30 days to any request by the board to audit records pertaining to the supervision of interns.

10. It is the responsibility of the supervisor to recommend for licensure as a LMFT those and only those MFT interns that to the best of his or her knowledge have completed the requirements for licensure contained in this statute, satisfactorily fulfilled the terms of the board-approved plan of supervision, and have otherwise demonstrated a satisfactory level of competence in delivering professional services to their clients during the course of their internship.

11. As is applicable, it is the responsibility of the supervisor to recommend for certification as board-approved supervisors those and only those supervisor candidates that have satisfactorily fulfilled the terms of the board-approved plan of supervision-of-supervision and have otherwise demonstrated a satisfactory level of competence in delivering professional services to their supervisees.

B. Specific Responsibilities of the Supervisor to the MFT Intern. It is the responsibility of the supervisor to:

1. review with the intern a copy of the supervisor's board-approved statement of practice, provide a copy of this statement to the intern, and file a copy of this statement with the board in accordance with advisory committee policy;

2. provide guidance and training to the intern in the ethical and competent delivery of psychotherapeutic services in a manner that leads the intern toward qualification as a LMFT. This includes but is not limited to guidance and training in diagnosis and treatment of emotional, mental, behavioral, and addictive disorders, problem assessment, treatment plan development, application of therapeutic knowledge, joining skills, technique selection, intervention skills/outcome assessment, application of ethical and legal principles, case documentation and reporting, case management, and consultation protocol;

3. provide a respectful and confidential learning environment for the intern that promotes the intern's professional development as a LMFT, encourages the intern's successful completion of the plan of supervision, and provides a controlled space for supervision sessions where the intern may discuss confidential case material without the risk of violating client confidentiality;

4. oversee the formulation of the intern's plan of supervision in accordance with advisory committee policy that provides reasonable access for the intern to the board-approved supervisor and the supervision process, meets the developmental needs of the intern, and affords the supervisor adequate contact with the intern to appropriately monitor the quality of the intern's service delivery to clients;

a. The intern or the supervisor may request to amend the plan of supervision during the course of internship. Changes to the plan of supervision should be the result of collaboration between the intern and the board-approved supervisor;

b. It is the responsibility of the supervisor to oversee the intern's submission of amendments to the plan of supervision to the advisory committee within thirty days for approval in accordance with advisory committee policy.

5. assist the intern in finding a suitable resolution in the event that the policies of the intern's employer or contractor impede the intern in providing a level of care to clients that meets the standards provided by board policy or this Rule. The supervisor should make reasonable effort to assist the intern in resolving such conflicts in a manner that if possible allows the intern to maintain his or her employment, comply fully with responsibilities as described in this statute, and complete the plan of supervision successfully;

6. assist the intern in identifying personal and professional strengths and weaknesses that affect the intern's development as a family therapist and provide regular, meaningful feedback in accordance with advisory committee policy that will help the intern reinforce his strengths while improving his weaknesses;

7. avoid any dual relationship that could result in exploitation of the intern, compromise the supervisor's ability to prioritize the welfare of the intern's clients, or hinder the supervisor in providing objective feedback to the board or the intern about his progress toward qualification as a LMFT.

a. In the event that the supervisor also has administrative responsibility for the intern in an agency or business, it is the responsibility of the supervisor to prioritize the welfare of the intern's clients and the developmental needs of the intern over the needs of the supervisor's employing organization.

b. The supervisor should not employ the intern in his or her business as an employee or as a private contractor. In the event that such employment is necessary to the

intern's ability to qualify as a MFT intern, special permission for such employment may be granted at the discretion of the advisory committee.

c. If the MFT intern is employed by or contracts with the supervisor in his business or private practice to provide services for which his status as MFT intern qualifies him, the supervisor must not profit monetarily from the services of the intern beyond the supervisor's reasonable and customary fee for supervision as reflected in the board-approved supervisor's statement of practice and as defined in the intern's board-approved plan of supervision.

d. The supervisor shall not maintain any social relationship (friendship or romantic relationship) with the intern that could result in exploitation of the intern or could impair the objectivity of the supervisor in his or her roles as trainer of the intern and protector of the public.

8. submit all appropriate documentation designated for supervisors using the appropriate forms as determined by the advisory committee and in a manner that does not unnecessarily impede the intern's ability in a timely manner to qualify as a LMFT;

9. refer the intern for counseling or psychotherapy at the request of the intern or as the supervisor may deem prudent in assisting the intern in maintaining mental and emotional health sufficient to provide services to clients that meet the standard of care as defined by this Rule. The intern's supervisor(s) shall not under any circumstances provide counseling, psychotherapy, or psychological testing to the intern;

10. earnestly endeavor to resolve with the intern any personal, professional, or ethical conflicts that hinder the supervisor in effectively collaborating with the intern toward the provision of an appropriate standard of care to clients or successfully completing the terms of the plan of supervision.

a. It is the responsibility of the supervisor to take appropriate initiative to resolve such conflicts in a manner that is respectful to the intern and preserves continuity of care for the intern's clients.

b. In the event that such conflict cannot be resolved in a timely manner, the supervisor shall request assistance from the board in accordance with advisory committee policy.

D. Revocation, Suspension, or Limitation of the Board-Approved Supervisor Certificate of a Licensed Marriage and Family Therapist

1. The board upon recommendation of the advisory committee may withhold, deny, revoke, suspend or limit the board-approved supervisor certification of a LMFT on a finding that the board-approved supervisor has violated any of the rules, regulations, or ethical standards for board-approved supervisors as pertains to the supervision of MFT interns contained in this Rule or prior final decisions and/or consent orders involving the board-approved supervisor or supervisor candidate.

2. The advisory committee shall provide due notice to the supervisor and his or her assigned MFT interns and/or supervisor candidates of any change in the supervisor's qualification in accordance with advisory committee policy.

3. The board-approved supervisor or supervisor candidate has ninety days to appeal to the advisory committee in writing in accordance with advisory committee policy any withholding, denial, revocation, suspension, or limiting of the licensee's certification as board-approved supervisor or registration as an board-approved supervisor candidate.

AUTHORITY NOTE: Promulgated in accordance with R.S. 37:1101-1122.

HISTORICAL NOTE: Promulgated by the Department of Health and Hospitals, Licensed Professional Counselors Board of Examiners, LR 38:1972 (August 2012).

Mary Alice Olsan
Executive Director

1208#059

RULE

Department of Public Safety and Corrections
Office of Motor Vehicles

Driver's License—General Requirements
(LAC 55:III.143-157)

Under the authority of R.S. 37:3270 et seq., and in accordance with the provisions of the Administrative Procedure Act, R.S. 49:950 et seq., the Office of Motor Vehicles, adopts Sections 143, 144, 145, 146, 147, 148, 149, 150, 151, 152, 153, 154, 155, 156 and 157 under Chapter 1 to implement Act 294 of the 2011 Regular Session pertaining to all driver education providers being consolidated under the Department of Public Safety and Corrections, Public Safety Services, implements Act 307 of the 2011 Regular Session relevant to the mandate that all driver education providers become certified third party testers by June 30, 2012, and implements Act 317 of the 2011 Regular Session which mandates that all driver education courses shall include information on the economic effects of littering.

Title 55
PUBLIC SAFETY
Part III. Motor Vehicles

Chapter1. Driver's License

Subchapter A. General Requirements

§143. Definitions

A. As used in this Chapter, the following terms have the meanings described below.

30 Hour Classroom Course—a program which shall consist of a course of not less than 30 hours of classroom instruction required of first-time driver's license applicants age 15 and 16 excluding lunch breaks. The classroom course may include a web based course equivalent to 30 hours of classroom instruction, which has been pre-approved by DPS. This course shall be conducted utilizing the curriculum contained in this subchapter.

DPS—as referenced herein, the department shall be construed as referring to the Louisiana Department of Public Safety and Corrections, Public Safety Services, acting directly or through its duly authorized officers and representatives.

Driver Education Completion Certificate—proof of successful completion of the driver education course or the six hour pre-licensing course required by law, completed by a certified and approved driving school in the form designated by the Department of Public Safety.

Driving School—an entity licensed by DPS that offers instruction for the purpose of educating and training an individual, by offering a 38 hour driving course and/or a six hour pre-licensing course.

Eight Hour Behind the Wheel Course—a program which shall consist of a minimum of eight hours of instruction with the student as the operator of a dual-controlled motor vehicle. If under the age of 18, the student's parent or guardian shall sign, authorizing the instruction.

Instructor License—a license issued by DPS granting the holder of the license the authorization to provide instruction in driver education courses.

Major Offense—an infraction of major regulations and policies outlined within this chapter. Penalty will be assessed in the amount of $250 for the first offense, $500 for a second offense and possible revocation of the license. Revocation will be based on the nature of the infraction and left up to the discretion of the department.

Minor Offense—an infraction of the minor regulations and policies outlined within this Chapter. Penalty will be assessed in the amount of $100 per offense and possible suspension. Possible revocation of the school's license may occur after three offenses within a 12 month period. Revocation will be based on the nature of the infraction and left up to the discretion of the department.

Motor Vehicle—automobiles, trucks, truck-tractors, trailers and semi-trailers and motorcycles, propelled by steam, gasoline, electricity, or any other source of energy other than muscular power, except farm implements temporarily operated or moved on a highway or vehicles operated only on rails or tracks constructed therefor.

OMV—any reference herein to OMV shall be construed as referring to the Office of Motor Vehicles, Training and Certification Unit, P.O. Box 64886, Baton Rouge, LA, 70896.

Operator—every person who is in actual physical control of a motor vehicle upon a highway.

Penalty—monetary assessment for violation of procedures outlined in this Chapter.

Person—every natural person, firm, co-partnership, association or corporation.

Revocation—termination of license to operate a driving school or to instruct at a driving school as provided in these rules and regulations.

Secretary—the deputy secretary of the Department of Public Safety and Corrections, Public Safety Services, or his appointed designee.

School License—a license issued by DPS authorizing the holder of the license to provide driver education courses.

Six Hour Pre-licensing Course—a program which shall consist of six hours of classroom instruction required of first-time driver's license applicants seventeen years of age and above, if a 30-hour classroom course and eight hour behind the wheel course is not completed.

Street or *Highway*—the entire width between the boundary lines of every publicly maintained thoroughfare when any part thereof is open to the use of the public for purposes of vehicular travel.

Suspension—the temporary withdrawal of a school or instructor's license for violations of the laws and rules pertaining to driver's education.

Teaching Certificate—a certificate issued by Louisiana Department of Education indicating the holder is qualified to teach in the secondary schools of this state.

Temporary Instruction Permit—a permit issued by the driving school on a form approved and provided by DPS and permits unlicensed student drivers to receive instruction on public highways from a licensed behind the wheel instructor.

Third Party Examiner—an individual who has been licensed to administer road skills test through a third party tester.

Third Party Tester—for purposes of this chapter, a driving school with which DPS has perfected a contract with to administer road skills tests.

AUTHORITY NOTE: Promulgated in accordance with R.S. 32:402.1(A)(1) and R.S. 40:1461.

HISTORICAL NOTE: Promulgated by the Department of Public Safety and Corrections, OMV LR 38:1974 (August 2012).

§144. Driver Education and Driving Schools

A. DPS shall establish a driver education and training program to be utilized by secondary school systems and private driving schools of this state. The program shall consist of a course of not less than thirty hours of classroom instruction and eight hours of actual driving experience to eligible students as defined in R.S. 32:402.

B. Any application received and approved for a driving school after August 15, 2011, will be issued a license that provides for the administration of a 38-hour driver's education course, a 6-hour pre-licensing course, and the administration of written and road skills test as a third party tester. Any DPS approved driving school licensed to only offer the six hour pre-licensing course as of August 15, 2011, will be licensed to continue to offer only the six hour pre-licensing course, but will be required to become a third party tester, and is responsible for complying with the new requirements set forth in these rules. No other applications for only providing the six hour pre-licensing course will be accepted.

AUTHORITY NOTE: Promulgated in accordance with R.S. 32:402.1(A)(1) and R.S. 40:1461.

HISTORICAL NOTE: Promulgated by the Department of Public Safety and Corrections, Office of Motor Vehicles, LR 38:1975 (August 2012).

§145. Qualifications for Private Driving School Owners and Instructors

A. Qualifications for a Private Driving School Owner. To become a driving school owner, the applicant shall:

1. be a citizen of the United States or be lawfully present in the United States, and be a resident of the state of Louisiana;
2. be at least 21 years of age;
3. hold a valid Louisiana driver's license;
4. have earned at least a high school diploma or GED;
5. possess any required occupational license;
6. submit a completed application package as outlined in this Subchapter;
7. not have been convicted of any felony offenses related to the operation of a driving school or other business regulated by DPS;
8. not have been convicted of a crime involving violence, dishonesty, deceit, indecency or an offense involving moral turpitude within the last ten years;

9. not be convicted of any crime enumerated in R.S. 15:587.1(C) (the Child Protection Act);

10. is not a current or previous owner of a driving school or any other business regulated by DPS whose license has been revoked;

11. has not provided false information with the application or falsified or withheld documents or information from representatives of DPS;

12. not have been convicted of any misdemeanor or felony offenses involving controlled dangerous substance(s) or driving while intoxicated within the last 10 years.

B. Qualifications for Classroom Instructor. In addition to meeting the qualifications of a driving school owner, a classroom instructor the applicant shall:

1. a. currently hold a valid teaching certificate with the following specialized education courses:

i. general safety education—three hours;

ii. basic information course in Driver Education course—three hours;

iii. curriculum innovations and instructional devices course (three hours) in-depth study of driver education and traffic safety curricular materials and familiarization with related instructional devices;

iv. first aid—one hour; or

b. a certificate of completion of a driver education course at least equivalent to a 30-hour classroom course which has been approved by DPS;

2. at the time of application, within the last three years, shall not have the convictions listed below or a combination of three or more single convictions listed below:

a. driving under suspension;

b. two or more citations for seatbelt violations;

c. two or more citations for following too closely;

d. one or more citations for child restraint violations;

e. three or more exceeding the posted speed limit;

f. one or more citations for texting while driving;

3. have at least five years driving experience;

4. has not previously been a licensed instructor whose license has been suspended or revoked.

C. Qualifications for Eight-Hour Behind the Wheel Instructor. To be an eight-hour behind the wheel instructor the applicant shall:

1. meet the qualifications of a classroom instructor;

2. hold at least a valid Class "D" Louisiana chauffeur's license;

3. not be missing an eye, hand or foot; and

4. have visual acuity not worse than 20/40 in each eye, with or without corrective lenses and not have any restrictions which indicate less than 20/40 vision or has physical impairment restrictions on his driver's license.

AUTHORITY NOTE: Promulgated in accordance with R.S. 32:402.1(A)(1) and R.S. 40:1461.

HISTORICAL NOTE: Promulgated by the Department of Public Safety and Corrections, Office of Motor Vehicles, LR 38:1975 (August 2012).

§146. Application Process and Fees for Private Driving Schools and Instructors

A. Application Process for Initial Driving School License. The application process is a two step approval process.

1. An applicant for an initial driving school license shall complete and submit the following:

a. completed initial application for driving school owner approval (DPSMV6710);

b. non-refundable $50 certified check or money order made payable to the DPS;

c. completed criminal history background check forms for each owner, including two fingerprint cards along with separate certified check or money order made payable to Department of Public Safety and Corrections, for each background check to be conducted. The current fee is $26;

d. lesson plan containing:

i. beginning and ending time of each class day, including lunch and break periods;

ii. number of class days in the course;

iii. material sources;

iv. how information is presented, (i.e. handouts, videos, lectures);

v. title of audio visual sources to be utilized;

vi. current e-mail address.

2. Once the background check is successfully completed and the initial application is approved, the applicant shall submit the following:

a. completed driving school initial application (DPSMV 2147). This form is furnished by OMV and shall be signed by the owner and notarized;

b. copy of any required occupational license;

c. completed background check forms on any other employees responsible for the supervision of students;

d. certificate of insurance in the company name stating that all vehicles utilized in the behind the wheel course are currently insured and that upon cancellation or expiration, the department will be notified. This certificate shall be from the issuing insurance carrier, not the agency; identify (by description and vehicle identification number) the vehicle(s) covered. The limits shall be from a company authorized to do business in this state in the amount of at least the minimum amount required by R.S. 32:900;

e. address of and specification on classrooms utilized to conduct the classroom course, including room size and capacity as determined by the state fire marshal or local authority;

f. completed driving school instructor application package for each instructor;

g. course specifications as defined in this Subchapter;

h. copies of unit tests and final examination;

i. lesson plan for the behind the wheel course which outlines the stages of the course based on the student's progression and specifies the types of roads traveled, the traffic signals and signs encountered on the routes taken, and the average time frame students are exposed to various types of roads. Written documentation or GPS mapping may be included;

j. completed application package for third party tester certification.

B. Application for Instructor of a Driving School

1. An applicant for a driving school instructor license shall complete and submit the following:

a. application for instructor of a driving school (DPSMV 2148);

b. each applicant must successfully pass a fingerprint background check. The background check will be conducted in a manner set forth by DPS. Each applicant must pay the background check fee by a separate certified check or money order. The current fee is $26.

2. Once the applicant has successfully passed the background check, the following items shall be submitted to complete the process.

a. a valid teaching certificate or certificate of successful completion, as outlined in the qualifications.

3. Non-refundable $20 certified check or money order made payable to the DPS.

C. Licenses

1. Licenses shall be issued on a biennial basis. The initial license shall be valid from the date of issuance until December 31 of the following calendar year.

2. Licenses shall be nontransferable. In the event of a change of ownership, application for a new license shall be made and the old license shall be surrendered to the department before a new license will be issued to the new owner. The fee for the new license is $50 for each school location and $20 for each individual instructor payable as set forth and shall be submitted with the new application.

3. If a school license or instructor license is lost or destroyed, a duplicate will be issued for the application fee of $10 upon proof of the fact or, in the case of mutilation, upon surrender of such license.

D. License Fees

1. Every application for license shall be accompanied by a non-refundable application fee of $25 per year, collected biennially, per location and $10 per year, collected biennially, for each individual instructor per location for the school and a $26 background check fee per school employee/instructor involved in supervisory authority over the students.

2. These fees will be charged each time the license is renewed.

3. Licenses shall be renewed by December 31 on the year stated. If the completed application including all fees is not received by December 31, the license shall expire.

4. All fees shall be submitted in the form of a certified check or money order made payable to DPS. No personal or business checks will be accepted.

5. All license fees are non-refundable.

E. Renewal

1. Application for renewal of a license shall be made on the prescribed form, 90 days prior to license expiration, and accompanied by the appropriate fees.

2. The fees shall be submitted in the form of a money order or a certified check made payable to DPS. All renewal applications for privately owned schools shall be submitted to OMV before the close of business, October 1 of the expiration year.

3. Applications received after October 1 will be deemed untimely and may cause delay in renewal of the license. A school which has submitted an untimely renewal application and whose renewed license is not issued prior to December 31, shall not be authorized to conduct any classes after December 31, until the license is renewed.

4. Incomplete renewal applications may result in the license renewal being delayed or denied.

5. Background checks on owners, instructors and all employees involved in the supervision of students will be conducted upon license renewal.

6. Proof of continuing education for each instructor as outlined in this subchapter shall be submitted with the renewal packet.

7. The following documents shall be submitted as part of the renewal packet.

a. completed application for each school location;

b. completed application for each instructor;

c. completed application packet for any new instructors added;

d. certificate of insurance in the company name stating that all vehicles utilized in the behind the wheel course are currently insured and that upon cancellation or expiration, the department will be notified. This certificate shall be from the issuing insurance carrier, not the agency; identify (by description and vehicle identification number) the vehicle(s) covered. The limits shall be from a company authorized to do business in this state in the amount of at least the minimum amount required by R.S. 32:900;

e. proof of each instructor's successful completion of continuing education;

f. certified check or money order for appropriate fees;

g. each owner, instructor and any other employee involved in supervision of the students must successfully pass a fingerprint background check. The background check will be conducted in a manner set forth by DPS. Each applicant must pay the background check fee by a separate certified check or money order. The current fee is $26.

8. Any driving school that fails to renew his license/contract within six months of expiration shall be required to begin the initial application process again.

AUTHORITY NOTE: Promulgated in accordance with R.S. 32:402.1(A)(1) AND R.S. 40:1461.

HISTORICAL NOTE: Promulgated by the Department of Public Safety and Corrections, Office of Motor Vehicles, LR 38:1976 (August 2012).

§147. General Regulations for Private Driving Schools

A. All approved private driving schools shall operate from an office in the following manner.

1. A school shall have a primary location where records shall be kept in a secure manner. Records shall be available for inspection between the hours of 8 a.m. and 4:30 p.m., Monday through Friday. Only schools which are currently licensed by June 30, 2012 and currently maintain records at the owner's residence are allowed to do so. If the physical location where records are kept is the owner's residence, the owner agrees to make the records available for inspection. All schools licensed from this point forward will be required to maintain a primary location for the records.

2. A classroom location may be obtained by renting space from hotels or other facilities in the form of a conference room or a meeting room for the conduction of classes. No classes are to be held in a hotel room that is designed for temporary residence. No facilities may be rented or leased from an establishment that restricts entrance by age (no minors). No driving school shall be allowed to conduct business or instruction from a private residence.

Any classroom located on private property shall not be attached to a private residence.

3. DPS shall first approve any name to be used by a driving school. No school shall use the word "state" or "education" in a part of the school name.

4. A school shall not use any name other than its approved name for advertising or publicity purposes, nor shall a school make any false or misleading statements in any of it advertisements or publications. No school shall advertise or imply the school is "accredited" by any national or state organization for driving schools, when such accreditation does not exist.

5. No driving school shall advertise in any way until such time as the school is properly licensed by DPS.

6. The school's license shall be conspicuously displayed in the business during operational hours. In the case of rented or leased space, the license shall be displayed at that location while the space is being utilized by the driving school.

7. Prior approval is required for any classroom or business address change. OMV shall be notified 30 days prior to any change in address to allow for site inspection and verification.

8. A driving school applying to open a branch office in an additional location shall submit the prescribed forms set forth in the rules and regulations, with the application fee of $25 for each additional location. Classes cannot be conducted at the new location until the new license is issued.

9. All instructors shall be approved by DPS and obtain an instructor's license prior to providing instruction.

10. In the event a school owner or instructor license is revoked, that person shall not be involved in the administrative duties of the school.

11. All schools shall post a sign within the classroom stating that anyone who wishes to file a complaint against the school may contact the Training and Certification Unit at the Office of Motor Vehicles, P.O. Box 64886, Baton Rouge, LA, 70896, Attn.: Training and Certification Unit.

12. Driving schools may employee instructors currently licensed by DPS without repeating the application process. A notification of employment of a currently licensed instructor (DPSMV 6711) form shall be completed and submitted along with an application fee of $10, in lieu of the instructor application packet.

AUTHORITY NOTE: Promulgated in accordance with R.S. 32:402.1(A)(1) and R.S. 40:1461.

HISTORICAL NOTE: Promulgated by the Department of Public Safety and Corrections, Office of Motor Vehicles, LR 38:1977 (August 2012).

§148. Secondary/Alternative School Driver Education Program

A. Qualifications for Secondary Schools and Instructors

1. Schools. To provide a driver education program, the school shall:

a. have an established physical school location;

b. submit a complete application package as outlined in this Subchapter.

2. Instructor. To be a classroom instructor the applicant shall:

a. be a citizen of the United States or be lawfully present in the United States, a resident of the state of Louisiana, and at least 21 years of age;

b. hold at least a valid class "E" Louisiana driver's license;

c.i. currently hold a valid teaching certificate with the following specialized education courses:

(a). general safety education course—three hours

(b). basic information course in driver education —three hours;

(c). curriculum innovations and instructional devices course—three hours—in-depth study of driver education and traffic safety curricular materials and familiarization with related instructional devices;

(d). first aid—one hour; or

ii. certificate of completion of the driver education certification program mandated and approved by DPS;

d. at the time of application, within the last three years, shall not have the convictions listed below or a combination of three or more single convictions listed below:

i. driving under suspension;

ii. two or more convictions for seatbelt violations;

iii. two or more citations for following too closely;

iv. one or more citations for child restraint violations;

v. three or more exceeding the posted speed limit;

vi. one or more citations for texting while driving;

e. not have been convicted of any felony offenses related to the operation of a driving school;

f. not have been convicted of a crime involving violence, dishonesty, deceit, indecency or an offense involving moral turpitude within the last 10 years;

g. not be convicted of or be under indictment or under bill of information for any crime enumerated in R.S. 15:587.1(C) (the Child Protection Act);

h. does not now own or is a previous owner of a driving school whose license has been revoked;

i. has not provided false information with the application or withheld documents or information from representatives of DPS;

j. not have been convicted of any misdemeanor or felony offenses involving controlled dangerous substances or driving while intoxicated within the last ten years.

3. Qualifications for Eight Hour Behind the Wheel Instructor. To be an eight hour behind the wheel instructor the applicant shall:

a. meet all of the qualifications for a classroom instructor;

b. hold at least a valid Class "D" Louisiana chauffeur's license;

c. not be missing an eye, hand or foot; and

d. have visual acuity not worse than 20/40 in each eye, with or without corrective lenses and not have any vision restrictions which indicate less than 20/40 vision or have physical impairment restrictions on his driver's license.

AUTHORITY NOTE: Promulgated in accordance with R.S. 32:402.1(A)(1) and R.S. 40:1461.

HISTORICAL NOTE: Promulgated by the Department of Public Safety and Corrections, Office of Motor Vehicles, LR 38:1978 (August 2012).

§149. Application Process and Fees for Secondary/Alternative Schools and Instructors

A. Application Process for Individual Secondary Schools in which the Driver Education Program is Controlled at the School Level. The individual school must submit the following:

1. completed initial application for secondary school driver's education program (DPSMV6714);

2. non-refundable $50 application fee in the form of certified check, money order or school check from a public school system made payable to the DPS;

3. lesson plan containing the following:

a. beginning and ending time of each class day, lunch and break periods included;

b. number of class days in the course;

c. material sources;

d. time periods assigned to each topic;

e. how information is presented, i.e. handouts, videos, lectures;

f. title of audio/visual sources to be utilized;

4. current e-mail address;

5. certificate of insurance in the school/system's name stating that all vehicles utilized in the behind the wheel course are currently insured and that upon cancellation or expiration, the department will be notified. This certificate shall be from the issuing insurance carrier, not the agency; identify (by description and vehicle identification number) the vehicle(s) covered. The limits shall be from a company authorized to do business in this state in the amount of at least the minimum amount required by R.S. 32:900;

6. completed driving school instructor application package for each instructor;

7. class schedules including defined break and lunch periods—shall specify the time frame for breaks and lunch;

8. copies of unit tests and final examination;

9. lesson plan for the behind the wheel course which outlines the stages of the course based on the student's progression and specifies the types of roads traveled, the traffic signals and signs encountered on the routes taken, and the average time frame students are exposed to various types of roads. Written documentation or GPS mapping may be included.

B. Application process for parish school system driver education programs which are controlled at the system level, not the individual school level:

1. completed initial application for parish-wide driver education program application (DPSMV6713);

2. systems which control the driver education program at the system level will not be required to pay the school license fee;

3. Paragraphs 2 through 9 listed above in the individual secondary school application process.

C. Application for Instructor of a Secondary/Alternative School. Applicants for a driving school instructor license shall complete and submit the following:

1. completed secondary school driver education instructor application (DPSMV2148);

2. copy of valid teaching certificate indicating completion of driver education courses outlined above or certificate of completion of the driver education certification program mandated and approved by DPS;

3. each applicant must successfully pass a fingerprint background check. The background check will be conducted in a manner set forth by DPS. Each applicant must pay the background check fee by a separate certified check or money order. The current fee is $26;

4. non-refundable application fee $20 certified check or money order made payable to DPS.

D. Licenses

1. Licenses shall be issued on a biennial basis. The initial license shall be valid from the date of issuance until August 31 of the following calendar year.

2. The school license shall be nontransferable. In the event of a change of ownership, application for a new license shall be made and the old license shall be surrendered to the department before a new license will be issued to the new owner. The fee for the new license is $50 for each school location and $20 for each individual instructor payable as set forth and shall be submitted with the new application.

3. If a school license or instructor license is lost or destroyed, a duplicate will be issued for the application fee of $10 upon proof of the fact or, in the case of mutilation, upon surrender of such license.

E. License Fees

1. Every application for license shall be accompanied by a non-refundable application fee of $25 per year collected biennially per location and $10 per year per year collected biennially for each individual instructor for the school and a $26 background check fee per school employee involved in supervisory authority over the driver education students.

2. These fees will be charged each time the license is renewed.

3. Licenses shall be renewed by August 31 on the year stated. If the completed application including all fees is not received by August 31, the license shall expire.

4. All fees shall be submitted in the form of a certified check, money order or school check from public schools made payable to DPS. No personal or business checks will be accepted.

5. All license fees are non-refundable.

F. Renewal

1. Application for renewal of license shall be made on the prescribed form, 90 days prior to license expiration, and accompanied by the appropriate fees.

2. The fees shall be submitted in the form of a money order, certified check or school check from a public school made payable to DPS.

3. All renewal applications for secondary schools shall be submitted to OMV before the close of business, June 1 of the expiration year.

4. Applications received after June 1, will be deemed untimely and may cause delay in renewal of the license. A school which has submitted an untimely renewal application and whose renewed license is not issued prior to August 31, shall not be authorized to conduct any classes until the license is renewed.

5. The following documents shall be submitted as part of the renewal packet:

a. completed application for each school location or school system;

b. completed application for each instructor;

c. completed application packet for any new instructors added;

d. certificate of insurance in the company name stating that all vehicles utilized in the behind the wheel course are currently insured and that upon cancellation or expiration, the department will be notified. This certificate shall be from the issuing insurance carrier, not the agency; identify (by description and vehicle identification number) the vehicle(s) covered. The limits shall be from a company authorized to do business in this state in the amount of at least the minimum amount required by R.S. 32:900;

e. proof of each instructor's successful completion of continuing education;

f. certified check, money order or school check for appropriate fees;

g. each applicant must successfully pass a fingerprint background check. The background check will be conducted in a manner set forth by DPS. Each applicant must pay the background check fee by a separate certified check or money order. The current fee is $26.

6. Any school that fails to renew his license within six months of expiration shall be required to begin the initial application process again.

AUTHORITY NOTE: Promulgated in accordance with R.S. 32:402.1(A)(1) AND R.S. 40:1461.

HISTORICAL NOTE: Promulgated by the Department of Public Safety and Corrections, Office of Motor Vehicles, LR 38:1979 (August 2012).

§150. Regulations and Policies for Secondary and Alternative School Driver Education Courses

A. General Regulations for Secondary and Alternative Schools. All approved secondary and alternative schools shall operate from an office in the following manner.

1. If oversight for the driver education program is provided at the system level, not the individual school level, the system shall determine the location where the records shall be kept. All records shall be maintained at a central location and shall be kept in a location which provides DPS access to the records during daytime hours.

2. In school systems where the oversight for driver education is provided at the individual school level, the records shall be maintained at the individual school and shall be made available to DPS during daytime hours.

3. Classroom instruction shall be provided at an approved and certified driving school. Home study is not permitted for any portion of the classroom instruction.

4. The school superintendent/principal shall share the responsibility for all acts performed by instructors or employees that are within the scope of employment and which occur during the course of employment.

5. Principals/superintendents will be responsible for ensuring instructors complete continuing education courses in an effort to stay abreast of the latest trends and standards of driver education.

6. Individual secondary schools shall apply to DPS for the approval of its driver education program prior to the administration of same.

7. In parishes where one or more instructors provide driver education instruction for all schools in the parish, the parish school system shall apply for the school license to provide driver education. The instructor shall be issued a parish-wide license for instruction.

8. Secondary schools shall have the option to provide a six hour pre-licensing course.

9. Secondary schools shall have the ability to administer road skills tests to students who are currently enrolled in its school system or have completed the system's driver education course.

10. Secondary schools shall utilize the same curriculum as privately owned driving schools.

AUTHORITY NOTE: Promulgated in accordance with R.S. 32:402.1(A)(1) AND R.S. 40:1461.

HISTORICAL NOTE: Promulgated by the Department of Public Safety and Corrections, Office of Motor Vehicles, LR 38:1980 (August 2012).

§151. Regulations for All Driver Education Providers

A. General Regulations. The rules and requirements listed in the remainder of this section shall apply to both private driving schools and driver education programs administered by secondary and alternative schools.

1. No employee of DPS, whose duties relate in any way to the issuance of a driver's license, shall be connected with any driving school.

2. The school shall notify DPS by e-mail at ladrivingschools@dps.la.gov of any change of telephone number or e-mail address within 14 calendar days of such change. DPS shall notify the school within three business days that they have received said correspondence.

3. Any additional instructors or substitute instructors hired during the license period shall be properly licensed prior to administering any instruction.

4. The school shall agree to permit DPS representatives to inspect the school and shall make available to DPS, when requested to do so, all information and records pertaining to the driver education program. Upon request, the school shall provide photo copies of the school records required by DPS.

5. The school shall not, by advertisement or otherwise, state or imply that upon completion of a course or the road skills test, the securing of a driver's license is guaranteed or assured.

6. The school shall maintain adequate standards of instruction, qualified instructors, and equipment sufficient to adequately maintain the school or classes.

7. No instructor will be permitted to accompany any student into any examining office rented, leased or owned by DPS, for the purpose of assisting student in taking a driver's license examination.

8. No instructor will be permitted to loiter, advertise or personally solicit any individual on the premises rented, leased or owned by DPS, and operated for the purpose of conducting state driver's license examinations.

9. No school instructor shall be permitted to use the space provided on the premises of any office rented, leased or owned by DPS, for parallel parking or any other behind the wheel instruction during normal OMV business hours.

10. Each school shall maintain a minimum of one instructor properly licensed and trained to administer road skills tests.

11. Classroom instruction shall be provided in an approved driving school. Home study is not permitted for any portion of the classroom instruction.

12. A school that is operating at a location without a current license may have its license revoked.

13. All grievances or complaints made against the school and/or instructor shall be addressed within 14 business days and the resolution shall be documented

14. The school shall notify OMV within 14 days of any licensed instructor who leaves the employment of the school. The instructor license shall be returned to OMV for cancellation. OMV shall notify the school within three business days that they have received said correspondence.

15. A licensed owner or instructor who is formally charged or convicted for any offense which would disqualify him, shall notify OMV in writing within 14 days of arrest. Failure to notify OMV may result in suspension or revocation of the license.

16. Driver education instructors shall participate in and provide evidence of successful completion of at least two of the following to obtain credit for continuing education on an annual basis. Credit shall be given only for courses that were completed during the appropriate licensing period:

a. post-secondary course that pertains to driver education as provided by an accredited college or university. A passing grade is required;

b. an approved defensive driving instructor development course;

c. a course provided by national, state, or regionally sponsored in-service workshops, seminars, or conferences that pertain to subject matters that relate to the practice of driver education or teaching techniques;

d. a course that pertains to subject matters relative to driving safety;

e. standard first aid or CPR certification.

17. In the event of a school closure, either by voluntary measures or by action of the Department of Public Safety and Corrections, Public Safety Services, refunds will be issued upon request. All refunds shall be processed within 30 days after the effective date of termination or request, whichever is sooner. Proof of refund shall be the refund document or copies of both sides of the cancelled check and shall be on file within 20 days of the effective date of refund action. All refund checks shall identify the student to whom the refund is assigned.

B. Suspension, Revocation and Penalty Assessment

1. All regulations outlined in this Chapter shall be adhered to by the school and its employees. DPS may suspend or revoke any driving school license or instructor license issued under these rules and regulations upon discovery of satisfactory evidence of violations. If the violation involves the owner of the school or other management staff, then the driving school will be assessed penalties or the license may be suspended or revoked. If the violation involves the instructor, then the instructor may be fined or the instructor's license may be suspended or revoked, depending on the nature of the violation. Fines may be assessed up to $500. If the fine is not paid, the license shall be revoked.

2. Any instructor whose driving privileges have been suspended or revoked is subject to having his instructor's license suspended or revoked.

3. The license of any instructor charged by indictment or bill of information for any crime enumerated in R. S. 15:587.1(C) (the Child Protection Act) shall immediately be suspended and shall remain suspended until such time as a final disposition of the charges are received by DPS.

C. Appeal Rights

1. Notice of License Denial and Appeal

a. An applicant who is denied a driving school or instructor license shall be notified in writing by DPS. Such notice shall comply with R.S. 49:955(B). Upon receipt of such notice, the applicant shall have two options.

i. Option 1-Informal Review. The applicant shall have 10 business days to request an informal review of documentation and evidence provided by the applicant setting out reasons the denial should be considered improper. Should the applicant remain dissatisfied with DPS' decision following this review process, the applicant may appeal this decision within 20 business days of receipt of DPS' decision by requesting an administrative hearing. Any such hearing requested by an applicant shall be scheduled and conducted in accordance with the Administrative Procedure Act pursuant to R.S. 49:950 et seq.

ii. Option 2-Formal Appeal. The applicant may appeal the denial by the department in writing within 30 days of receipt of DPS' decision by requesting an administrative hearing. Any such hearing requested by an applicant shall be scheduled and conducted in accordance with the Administrative Procedure Act pursuant to R.S. 49:950 et seq.

b. A request for an administrative hearing shall be made in writing to DPS. If the request for a hearing is not submitted timely, the denial shall become final.

2. Notice of Suspension, Revocation or Fine

a. An applicant whose permit is revoked, suspended, or who is issued a fine shall be notified in writing by DPS. Such notice shall be in compliance with R.S. 49:955(B). Any notice of immediate suspension or revocation shall be in accordance with R.S. 49:961.

b. Upon receipt of such notice, the applicant shall have 10 business days to request, in writing, an informal review of DPS' action. The applicant should provide DPS with relevant information which might have some bearing on the department's action. The applicant should include any documents or other evidence he wishes the department to consider.

3. General Provisions

a. Upon receipt of a request for any review, the deputy secretary or his designee shall review DPS' action considering the information submitted, and affirm, modify, or reverse DPS' action. Written notice of DPS' decision to affirm, modify or reverse DPS' action shall be provided to the applicant.

b. Except as otherwise provided by these rules, any notice shall be served by certified mail, return receipt requested, or hand delivered to the permanent address that is provided in the application, or latest amendment thereto, on file with DPS. If any incorrect or incomplete address has been supplied to DPS by the applicant or applicant, such that service cannot be successfully completed, or the applicant or applicant fails to accept properly addressed certified mail, notice shall be presumed to have been given.

c. Any fine levied by DPS which is adjudicated to a final administrative judgment shall be paid within 14 calendar days of said judgment becoming final. Failure to pay such a fine within 14 calendar days may serve as grounds to suspend or revoke any license or contract under this part.

d. In cases of serious violations of the law or these rules, or in situations in which the law calls for prompt suspension or revocation, or violations which present a danger to the public health, safety or welfare, DPS may provide notice in accordance with R.S. 49:961. Such notice shall be promptly documented and confirmation in writing shall be provided to the applicant.

e. Any request for an administrative hearing shall be made in writing and sent to DPS within 30 days. If no request for a hearing is timely made, the action and/or penalty shall become final.

D. Records Regulations

1. All schools shall make available records and necessary data required for licensing for inspection by authorized DPS representatives.

2. All records and necessary data pertaining to the operation of the school shall be maintained in the office in chronological class order and shall be available for inspection upon request by any law enforcement officer or DPS representative. All records shall be maintained for a minimum of five years. Records shall include, but are not limited to:

a. a file including the name, address and contact information of all guest lecturers;

b. a file on all instructors containing the following documentation:

i. copy of instructor's license;

ii. employment records, including time and attendance records, address and contact information;

c. a permanent record of lesson plans and other resources utilized for classroom instruction. Written documentation of the lesson plan for the behind the wheel portion of the course;

d. class schedules and sign in rosters from classes held;

e. copies of all written complaints and grievances filed with the school along with written documentation of the resolution.

3. Every driving school shall maintain the following records on the individual student who is administered either the 38 hour driver's education or six hour pre-licensing course:

a. official name and address of the school shall be printed on all student documentation;

b. completed enrollment form which shall include, but is not limited to, the following:

i. student's legal name, date of birth as taken from the birth certificate or other acceptable primary document as defined by DPS, telephone number and physical address (other than P.O. Box);

ii. parental/guardian consent for minor applicants, including identification presented;

iii. date of enrollment;

iv. any funds received from, or on behalf of, a student;

v. dates of classroom instruction;

c. completed driving school temporary instruction permit which includes:

i. behind the wheel instruction schedule including the instructor's printed name and his instructor license number;

ii. beginning and completion dates of the course;

iii. vehicle (s) driven during the course;

iv. mileage accumulated during the student's course;

v. grades of tests administered;

vi. final grade earned;

d. date instruction terminated, if applicable;

e. copy of completion certificate.

4. Every driving school shall maintain a class schedule and shall notify DPS of the classes scheduled, including the type of course to be administered. This schedule may be submitted quarterly, bi-annually or annually. DPS shall be notified of any changes in the schedule after submission to DPS.

E. Minimum Course Standards Policy

1. No more than 40 students per classroom shall be allowed in a driver education course. In the case of make-ups, an additional 5 students may be allowed. Class size shall not exceed the maximum capacity for the room set by the state fire marshal or local regulations.

2. A minimum of one instructor is required for each classroom.

3. No more than eight hours of instruction, including unit tests or final examination, shall be conducted per day.

4. Administrative procedures, such as enrollment, shall not be included in instructional time.

5. Students shall not be supervised by any person who has not submitted to the background check required by these rules.

6. Visitors, other than parents/legal guardians or interpreters, shall not be allowed to loiter in the classrooms while classes are in session.

7. Classroom settings shall be conducive for learning.

8. Multiple classrooms shall be separated by solid walls which are made of materials that reduce noise transfer between classrooms.

9. Schools which share locations with other businesses shall take all means necessary to ensure the security and safety of minor students and shall ensure the location is free of interruptions during scheduled class times.

10. Students shall be provided with adequate break and lunch periods proportionate to instructional time.

11. Lunch periods shall not be considered as part of the instructional time for a driver education course.

12. Break times allotted shall not exceed 10 minutes per each 90 minutes of instruction.

13. All break periods shall be provided prior to the final examination.

14. Students may not leave the classroom during the final examination. Electronic devices (tablets, PDAs, cell phones) shall not be allowed in the classroom during examinations.

15. The 30 hour classroom course shall provide a minimum of 30 hours of classroom instruction. The formalized instruction, a minimum of 22 1/2 hours (75 percent), will consist of lecture, computer format and classroom discussion. The instruction provided with audio visuals may include films, slides, videos or demonstrations specifically designed to supplement the formalized instruction. A maximum of 7 1/2 hours (25 percent) may consist of audio visuals.

16. The six hour pre-licensing course shall provide a minimum of six hours of classroom instruction. The

formalized instruction, a minimum of four and half hours (75 percent), will consist of lecture, computer format and classroom discussion. The instruction provided with audio visuals may include films, slides, videos or demonstrations specifically designed to supplement the formalized instruction. A maximum of one and half hours (25 percent) may consist of audio visuals.

17. The 30 hour classroom course and the six hour pre-licensing course shall not be conducted in the same classroom during the same time frame.

18. OMV reserves the right to attend any classroom course provided by the school to ensure full compliance with administrative code and course content.

19. Unit tests shall be administered to measure the effectiveness of instruction during the classroom course. A final examination, approved by DPS, shall be administered to all students at the completion of the course. Students may not be given credit for the classroom course unless they score at least 80 percent on the final examination. Test questions may be short answer, multiple choice, essay or a combination of these forms, but shall be adequate to demonstrate transfer of knowledge.

20. Students shall score at least 70 percent on the eight hour behind the wheel course to receive a completion certificate for the behind the wheel course.

21. No more than two students shall be allowed in a dual controlled vehicle that is being used for behind the wheel instruction, provided the vehicle is equipped for that many passengers. Only the student driver and the driving instructor shall be allowed in the front seat of such vehicle. Students shall not receive credit for riding time.

22. Each student shall be provided a minimum of eight hours of actual behind the wheel instruction.

23. The eight hour behind the wheel course shall be completed within 120 days of completion of the 30 hour classroom course.

24. Behind the wheel instructors shall not utilize electronic communication devices during a driving session.

25. Behind the wheel instructors shall remain awake and alert during the student's driving session.

26. The behind the wheel instruction shall expose the student to the different types of roadways as possible, based on the student's skill level progression. Additional time may include traveling the student's route to and from his home and school and traveling roadways where the student exhibits any weakness.

27. One hour of instruction on the following types of roadways is recommended:

a. rural roads;
b. city roads;
c. major highways;
d. interstate.

28. Documentation shall be made in the student's record when his skill level does not progress satisfactorily to expose them to the different types of roads.

29. When the student begins each driving session the beginning odometer reading on the vehicle shall be recorded. The ending odometer reading on the vehicle shall be recorded for each driving session. Once an odometer reading is captured for a student, that odometer reading cannot be recorded again for another student.

30. The files for the school shall reflect accurate odometer readings for each student. The mileage shall not fluctuate in the records or show moving backwards.

31. Once a student has begun the classroom course, the school may opt to begin the eight hour behind the wheel course while conducting the classroom course as long as 30 hours is attributed to the classroom course and eight hours is attributed to the behind the wheel course. Any school that administers the classroom course and behind the wheel course simultaneously shall include in the behind the wheel course documentation, the topics covered during the classroom course which are reinforced during the behind the wheel session.

F. Insurance and Safety Requirements

1. Motor vehicles utilized for behind the wheel training shall be less than 10 years of age and have less than 300,000 miles recorded on the odometer and shall be maintained in safe mechanical and physical condition at all times. Vehicles utilized should be of a type that is not intimidating to a novice driver.

2. Every motor vehicle used for behind the wheel driving shall be properly registered in Louisiana and display a current Louisiana inspection sticker. The vehicle shall be equipped with the following special equipment:

a. dual controls on the foot brake (and clutch on vehicles with manual transmission), capable of bringing the vehicle to a stop and otherwise equipped, in accordance with Louisiana laws;

b. rearview mirrors, one on each side of the vehicle; and

c. appropriate cushions for the proper seating of students when necessary.

3. Every vehicle used for behind the wheel driving shall contain a conspicuously displayed, securely fastened sign to the rear stating "student driver." A sign bearing the name of the driving school under which it is licensed may be used in lieu of the student driver sign. The sign shall be in plain view and shall have contrasting letters not less than 3 1/2 inches in height, readable from a distance of not less than 100 feet. A decal or sign listing the school name, address and phone number shall be displayed on each side of the vehicle.

4. DPS shall be advised via e-mail at la.driving.schools@dps.la.gov within 14 days of a vehicle that is removed from service and shall be provided the required information on replacement vehicles. DPS shall notify the school within three business days that they have received said correspondence.

G. Behind the Wheel Driving Requirements

1. The temporary instruction permit shall be issued to each individual student by the driving school on a form approved and provided by DPS, and is valid only during the behind the wheel training.

2. The student shall provide correct information in legible form on the front of the permit application. Applications shall be completed under the supervision and with the assistance of the instructor.

3. The student's birthday shall be carefully checked, since it is unlawful to issue a school instruction permit to anyone who has not reached his/her fifteenth birthday. The form may be completed upon enrollment in the class;

however, it may not be utilized until the student has reached the age of 15 and begins the behind the wheel course.

4. All questions on the front of the permit application shall be answered truthfully and correctly by the student. The student should sign with usual signature, not necessarily his/her full name. The application shall be completed in ink.

5. If the applicant is a minor, it is mandatory that the domiciliary parent sign the application in the presence of a notary public or the instructor/owner.

6. In case of a minor, if both parents are deceased, or have lost custody, the application shall be signed by the applicant's legal guardian. The instructor shall require proof that the person is the legal guardian.

7. If a student answers "yes" to medical questions number 1 and/or number 2 listed on the temporary instruction permit the student shall be referred to DPS to be given a DPSMV-2032 medical examination form which requires completion by the student's physician. The student shall be instructed to submit the completed form with the permit application to OMV, Training and Certification Unit. OMV will approve or deny the issuance of the temporary instruction permit.

8. Before initiating behind the wheel instruction, each instructor should take appropriate, practical action to assure that each student has no apparent visual or hearing condition which could impair his ability to safely operate a motor vehicle.

9. Anyone applying for a behind the wheel course who has a special need, because of a physical or mental impairment, shall be referred to a driver rehabilitation specialist as defined in R.S. 32:401.

10. The temporary instruction permit shall be in the possession of the instructor and carried in the vehicle at all times while behind the wheel driving instruction is given. The permit is valid only for the length of the driving instruction and shall be presented upon request to any law enforcement officer.

H. Driver Education Completion Certificate Requirements

1. The driver education completion certificate is designed by DPS, and issued by a licensed school upon successful completion of a 38 hour course or a six hour pre-licensing course. These certificates will expire five years after the completion date.

2. Every school approved by DPS, shall be required to serially number and complete the uniform driver education completion certificate. Each certificate shall display a distinguishing raised seal, consisting of the driving school's name, affixed to the specified area of the form, not to obscure any of the required signatures.

3. The original driver education completion certificate shall be identical to the form approved by OMV and shall be given to the student to present to DPS as proof of compliance with the driver training requirement for a driver's license or learner's permit. A second copy is to be provided to the student and the third copy is to be maintained by the school for a minimum of five years from the date of course completion.

4. Upon request, schools shall provide to the student, photocopies or duplicates of driver education completion certificate for a minimum of five years from the date of course completion. Such duplicates shall be certified (signed and dated) by owner of the driving school.

5. All unissued driver education completion certificate shall be safeguarded at all times. The certificates shall be kept in a secure place under lock and key and only available to those representatives of the driving school authorized to issue such certificates and DPS representatives.

6. Every school shall maintain an ascending numerical accounting record of all certificates issued. The records and all unissued certificates shall be open for inspection to DPS or any law enforcement agency during normal business hours.

7. The course completion date indicated on the certificate must be equal to or later than the date the student completed both the classroom course and the behind the wheel course.

8. No certificate shall be issued until such time that the classroom and behind the wheel course has been completed.

9. Unissued lost or stolen certificates of completion shall be reported to DPS immediately. If a theft or suspected theft has occurred, the local law enforcement agency shall also be notified and a police report sent to the Office of Motor Vehicles immediately.

10. Schools shall complete a student assessment including any comments relevant to the student's proficiency and shall attach the assessment to the driver education completion certificate to advise the parent(s) of the student's driving proficiency.

AUTHORITY NOTE: Promulgated in accordance with R.S. 32:402.1(A) (1) AND R.S. 40:1461.

HISTORICAL NOTE: Promulgated by the Department of Public Safety and Corrections, Office of Motor Vehicles, LR 38:1980 (August 2012).

§152. Course Specifications

A. Every driving school shall furnish each student/parent with course specifications prior to the beginning of any instruction. The course specifications shall be submitted to OMV with the application package. The following information shall be contained in the course specifications:

1. the total fee for the requested course of instruction which shall cover all expenses including the cost of the original and at least one additional copy of the driver education completion certificate provided to each student;

2. the school's cancellation and refund policy;

3. the school's standards of required behavior including but not limited to:

a. an absolute prohibition against cheating as well as the consequences which will result if these standards are violated;

b. the school's policy on students' use of electronic communication devices in the classroom and during testing;

c. the school's policy pertaining to absence and rescheduling procedures;

4. the school's grading policy, indicating that a passing score of 80 percent on the classroom and 70 percent behind the wheel shall be accomplished to be issued a driver education completion certificate;

5. any additional charge for the use of a school vehicle in taking behind the wheel instruction or for picking up a student or taking him to his residence or destination;

6. explanation of instruction the student will receive including:

a. number of classroom instruction hours student will receive;

b. number of behind the wheel instruction hours the student will receive;

7. the school's grievance procedure, including the following statement: "Any grievance(s) not resolved by the school may be forwarded to the Department of Public Safety and Corrections, Public Safety Services, Office of Motor Vehicles, Attn.: Training and Certification Unit, P.O. Box 64886, Baton Rouge, LA, 70896-4886;"

8. identification of alternative testing techniques to be used for students with hearing, speech or learning disabilities.

AUTHORITY NOTE: Promulgated in accordance with R.S. 32:402.1(A) (1) AND R.S. 40:1461.

HISTORICAL NOTE: Promulgated by the Department of Public Safety and Corrections, Office of Motor Vehicles, LR 38:1984 (August 2012).

§153. Curriculum Administration

A. The curriculum contained in this subchapter was obtained from documents provided by National Highway Traffic Safety Administration (NHTSA) for Novice Teen Driver Education and Training Administrative Standards and was prepared by Driving School Association of the Americas and meets the current recommended national standards.

B. The curriculum as provided in these rules shall be covered in its entirety.

C. The order in which the topics are presented and the manner in which they are presented are left up to the discretion and teaching strategies of each school. Each school will be responsible for utilizing its creative license to present the course in such a manner the students will absorb and retain the information presented. Media resources may be used to augment the program's curriculum. All media resources shall relate to the topic presented and shall not contain any offensive or inappropriate subject matter. A master list of media resources shall be maintained in the school's records.

D. Student Guide. The Louisiana Driver Guide for Class E/D License will include the curriculum utilized in the 30 hour classroom course and will be made available for students and/or schools to purchase from the department at a cost of $10 which will be utilized to defray the printing cost of the guide.

AUTHORITY NOTE: Promulgated in accordance with R.S. 32:402.1(A) (1) AND R.S. 40:1461.

HISTORICAL NOTE: Promulgated by the Department of Public Safety and Corrections, Office of Motor Vehicles, LR 38:1985 (August 2012).

§154. Driver Education Curriculum

A. Upon enrollment of a minor student, the school shall conduct a parental responsibility segment with the parents, informing the parents of:

1. the content of the course;
2. parental responsibility;
3. determining the readiness of the teen to begin the process;
4. supervising the teen's driving to determine the teen's readiness to advance to the next licensing stage;
5. 50 hours supervised practice driving including 15 hours night time practice.

B. Course Introduction (instructional objective—to orient students to the class):

1. purpose and benefit of the course;
2. requirements for receiving course credit;
3. student course evaluation procedures.

C. Core Curriculum

1. Chapter 1 Introduction to Driving. This chapter will describe the requirements to obtain a Louisiana driver's license and general nature of the driving task in the complex Highway Transportation System (HTS), while recognizing the importance and seriousness of the highway safety problem. The many interactions of the three major elements of the HTS, roads, vehicles and people, result in a large number of diverse traffic situations and problems.

a. Louisiana process for earning the privilege to drive:

i. age requirements;
ii. organ donation;
iii. selective service;
iv. graduated license program.

b. Highway Transportation System

i. The traffic safety problem (instructional objective—to develop an understanding of the nature of the traffic safety problem and to instill in each student a sense of responsibility for its solution):

(a). identification of the overall traffic problems in the United States and Louisiana, as well as the local jurisdiction where the course is being taught;

(b). death, injuries and economic loss resulting from motor vehicle crashes in Louisiana; and

(c). five leading causes of motor vehicle crashes in Louisiana as identified by the Department of Public Safety and Corrections, Public Safety Services;

(i). careless and/or reckless operation;
(ii). failure to yield;
(iii). following too closely;
(iv). speeding;
(v). unknown/unspecified;
(vi). each year the current statistics can be obtained from http://datareports.lsu.edu.

c. Driving in the Highway Transportation System (instructional objective—understanding highway traffic systems and the driver's responsibilities)

i. Make-up of a complex system:
(a). number and types of elements;
(b). continuous interaction of elements;
(c). need for regulations and control.

ii. Number and types of traffic units:
(a). kinds of vehicles and its condition;
(b). characteristics of drivers;
(c). pedestrians and animals;
(d). traffic volumes and congestion.

iii. Number and types of highways:
(a). design features;
(b). conditions and maintenance;
(c). environmental settings.

iv. Number and types of traffic controls:
(a). signs and signals;

(b). roadway markings;
(c). written laws.

3. Chapter 2 Vehicle Components and Operation. What can a motor vehicle do or not do in a given situation? The more drivers know about a car's maneuvering and performance capabilities, the better they can handle emergencies. Drivers will also be better prepared to predict the probable actions of other drivers.

a. Proper use of safety restraint systems:
i. law of physics:
(a). momentum;
(b). inertia;
(c). kinetic energy;
(d). gravity;
(e). friction;
(f). force of impact;
ii. proper safety belt position;
iii. jurisdictional laws—driver responsible for compliance of all passengers in the vehicle

b. Safe and proper use of basic vehicle equipment:
i. control devices;
ii. instruments and warning indicators;
iii. devices that aid visibility;
iv. safety devices;
v. comfort devices;
vi. anti-theft devices;
vii. communication devices;
viii. traction control devices.

c. Safe and proper pre-trip checks:
i. maintaining your vehicle (instructional objective—a well maintained vehicle is safer to drive):
(a). vehicle inspection;
(b). preventive maintenance—brakes, tires, steering/suspension, under the hood;
(c). fuel economy—vehicle choice and maintenance, driving habits;
(d). planning a trip—preparing vehicle and yourself;
ii. friction:
(a). speed for conditions;
(b). effect of road surfaces on stopping;
(c). seasonal changes and road surfaces;
(d). tire types and conditions.

d. Vehicle Handling. Safe and responsible vehicle control:
i. controlling the vehicle safely and responsibly:
(a). hand position;
(b). visual tracking;
(c). steering control—oversteering and understeering;
(d). seating position;
(e). starting and accelerating;
(f). speed control;
(g). deceleration and braking—comparison of ABS systems, power brakes and standard actions;
(h). changing lanes;
(i). parking brake;
(j). parking;
(k). changing direction and turns;
(l). passing;
(m). following distance;
(n). right-of-way maneuvers;
(o). turns;
(p). cornering;
(q). highway and freeway driving;
(r). urban and rural driving;
ii. safe and responsible handling of the vehicle under various conditions:
(a). weight management;
(b). time management;
(c). space management;
(d). stopping distances;
(e). braking distances;
(f). following too closely;
(g). speed for conditions;
(h). effect of road surfaces on stopping;
(i). seasonal changes and road surfaces;
(j). tire types and conditions;
iii. safe and responsible driving to avoid crashes:
(a). crash avoidance habits and basic evasive maneuvers.

3. Chapter 3 Perception and Risk Management—to Develop Knowledge, Appreciation, and Skills Related to Perception and Risk Management and How They Contribute to Safe and Responsible Driving

a. Safe and proper observation skills:
i. what and where to observe and when:
(a). 360 degree vision;
(b). distance scanning and judgment;
(c). peripheral vision;
(d). blind spots;
(e), visual obstructions;
(f). limits of observation;
ii. how to observe:
(a). active attention;
(b). shoulder checks;
(c). peripheral vision;
(d). mirrors;
iii. visual search and scanning to detect potential hazards:
(a). distinguish hazards from typical occurrences;
(b). scanning patterns under all conditions;
(c). detecting potential path deviations;
iv. potential hazards of driving and effective responses:
(a). vehicle malfunctions;
(b). weather/environmental conditions;
(c). road conditions;
(d). railroad crossings;
(e). vehicle conditions;
(f). distractions inside the vehicle;
(g). distractions outside the vehicle;
(h). other road users—air turbulence from large vehicles;
(i). unpredictable driving behavior;
(j). driving error resulting in danger to self and to other road users;
(k). Detection and recovery from skidding and sliding—principles of skid control and slide control.

b. Effective decision making to ensure safe driving:

i. hazard perception, decision making, and judgment:

(a). scan, identifying problems, predicting outcomes, deciding action and executing decisions (SIPDE);

(b). using the SIPDE process—avoiding, separating and handling hazards, managing time, speed and space, following and stopping distance;

(c). trouble spots limiting use of SIPDE process—limited visibility, traction, space;

ii. using decision making skills to drive safely:

(a). evaluate whether or not to drive;

(b). anticipate what might happen;

(c). predict possible solutions;

(d). prioritize situations and solutions;

(e). make appropriate choices under pressure;

(f). identify consequences;

(g). make multiple decisions quickly;

(h). develop a hierarchy of responses to various situations and alternative responses.

4. Chapter 4 Traffic Laws. Without good traffic laws and enforcement, the safe and efficient movement of traffic on our highways would not be possible. Traffic laws are of little value if they are not understood and voluntarily followed.

a. Safety

i. Traffic laws for safety (instructional objective—familiarization with traffic and vehicle laws and to influence drivers to comply with laws on a voluntary basis):

(a). seat belt usage—child restraints;

(b). right-of-way rules;

(c). speed laws;

(d). special safety laws—DWI, implied consent, open container, post-collision procedures;

(e). texting/cell phone usage;

(f). driving while fatigued/under duress or stress;

(g). emergency vehicles;

(h). multi-lane highways—left lane usage.

ii. Compliance with traffic control devices as a foundation for safe and responsible driving—traffic control devices:

(a). signs;

(b). signals;

(c). markings;

(d). railroad crossings.

iii. Major traffic law violations:

(a). reckless homicide;

(b). reckless driving;

(c). driving under the influence of alcohol or drugs;

(d). driving without a license.

b. Other Issues

i. Other law violations:

(a). financial responsibility/compulsory insurance;

(b). littering;

(c). possessing, obtaining, or using a fraudulent driver's license, or identification card.

ii. Alcohol, other drugs, and driving:

(a). drug use and abuse—dangers, cautions, effects;

(b). alcohol and the driver—effects;

(c). responsibilities as a driver, passenger, host, person.

5. Chapter 5 Driver Behavior—to Develop Knowledge, Appreciation, and Skills Related to Driver Behavior and How It Contributes to Safe, Responsible, and Incident-Free Driving

a. Assessment and reactions:

i. accurate assessment of driving environments, road conditions and appropriate adjustment of driving behavior:

(a). adjusting driving behavior for different driving conditions;

ii. controlled emotional reactions related to driving:

(a). potential effects on driver decision making;

(b). recognizing internal cues and control responses;

iii. positive driving attitudes and behavior.

b. Personal factors and influence:

i. personal driving values and beliefs;

ii. motives that influence driving;

iii. how motives change under different circumstances;

iv. how values, beliefs, and motives influence attitudes toward driving.

c. Social factors and influence:

i. influence of advertising;

ii. social attitudes towards cars and driving;

iii. influence of other people's driving habits;

iv. peer pressure and driving.

d. Resisting negative pressures:

i. personal value of resisting negative pressures;

ii. resist negative informal pressures;

iii. resist negative media and commercial messages;

iv. entertainment media use of driving imagery.

e. Positive driving attitudes:

i. driving is a privilege not a right;

ii. overcoming negative motives;

iii. driving courteously;

iv. cooperative driving;

v. impact of driver behavior on other road users.

f. Responsible and informed decision making:

i. how formal rules of the road, common safe practices of road users, and informed decision making contribute to safe and responsible driving;

ii. approaches to decision making;

iii. importance of good decision making;

iv. consequences of poor decision making.

g. Environmentally conscious and efficient driving behavior:

i. fuel efficiency;

ii. mandatory emissions testing (inspection stickers);

iii. proper disposal of cars, fluids, batteries, and tires;

iv. littering;

v. planning safer and more efficient activities and routes;

vi. economic benefits of driving efficiently.

6. Chapter 6 Sharing the Road. To develop knowledge, appreciation, and skills to related to effectively interacting with other road-users and how it contributes to safe, responsible, and incident-free driving.

a. Cooperative driving:

i. sharing the road in a safe and considerate manner;

ii. understanding other road-users needs;

iii. passing safely;

iv. space management;

v. benefits of cooperative and courteous driving;

vi. pedestrians, animals and bicycles;

vii. sharing the road with school buses;

viii. sharing the road with motorcycles and mopeds;

ix. sharing the road with commercial vehicles;

x. sharing the road with law enforcement and emergency vehicles;

xi. cooperative interstate driving.

b. Appropriate communication with other road users:

i. communicating effectively with other road users;

ii. habits and attitudes related to effective communication:

c. consistently communicate driving intentions;

d. adjusting communication based on observation of the driving environment and other road users.

7. Chapter 7 Attention—to Develop Knowledge, Appreciation, and Skills Related to Attention and How It Contributes to Safe, Responsible, and Incident-Free Driving

a. Safe and responsible actions related to impaired driving:

i. types of impairment:

(a). drug;

(b). alcohol;

(c). fatigue;

(d). drowsy driving;

(e). illness;

(f). medication;

(g). mental stress;

(h). combination of multiple impairments;

ii. effects of impairment:

(a). impaired judgment;

(b). lack of attention/alertness;

iii. myths and facts related to impairment;

iv. consequences of impaired driving;

(a). personal and social consequences—responsibilities of a driver, passenger, host and person;

(b). legal and economic consequences.

b. Managed driver distraction:

i. distracted driving:

(a). distraction inside the vehicle;

(b). distractions outside the vehicle;

ii. managing attention:

(a). switching attention;

(b). divided attention;

(c). focused attention;

(d). sustained attention;

8. Chapter 8 Respect and Responsibility—to Develop Knowledge, Appreciation, and Skills Related to Respectful and Responsible Driving Attitudes and How They Contribute to Safe, Responsible, and Incident-Free Driving

a. Safe and Responsible Response to Emergency Situations

i. Responding to emergency situations:

(a). minor or major motor vehicle crashes;

(b). arriving at the scene of a crash;

(c). being stopped by a law enforcement officer;

(d). yielding to an emergency vehicle;

(e). vehicle malfunctions.

b. Leadership in Promoting Safe Driving

i. Being a safe, respectful, and responsible drive:

(a). being a leader in safety restraint use and promote it in others;

(b). being fit to drive and promote it in others;

(c). being caring and empathetic towards other road-users.

ii. Conflict avoidance regardless of fault:

(a). respecting other road-users' safety margins;

(b). avoiding road rage in yourself and others.

c. Respect for the Environment as it Relates to Operating a Vehicle

i. Environmentally conscious and efficient driving behavior:

(a). fuel efficiency;

(b). mandatory emissions testing;

(c). proper disposal of cars, fluids, batteries, and tires;

(d). littering;

(e). planning safer and more efficient activities and routes;

(f). economic benefits of driving efficiently.

d. Lifelong Learning Approach to Driving

i. The driver as a lifelong learner:

(a). factors that contribute to changes in driving skill;

(b). changing motor vehicle technology;

(c). changing driving practices and laws;

(d). the aging driving population.

9. Chapter 9 Defensive Driving:

a. five leading causes of collisions:

b. basic maneuvers for avoiding collisions:

i. tactical maneuvers;

ii. mental skills;

c. major driving errors:

i. compensating for another driver's error;

d. counter measures for driver physical conditions:

i. fatigue;

ii. illness;

iii. physical impairments;

iv. stress;

v. trip fatigue.

10. Chapter 10 Summation and Review—Comprehensive Summation of Unit(s)/Unit Test(s) and Final Examination

D. Eight Hour Behind the Wheel Curriculum. The behind-the-wheel portion of the curriculum will be limited to

no more than two hours behind the wheel for each student daily, unless the school has requested a waiver to provide up to four hours of instruction daily. There shall be no more than two students in the vehicle with the instructor. Upon completion of the behind the wheel portion a skills assessment shall be performed by the instructor. A road skills test shall be administered and the student shall attain a score of 70 percent or more to receive a certificate of successful completion.

1. Practical instruction shall include, at a minimum, the demonstration of and actual instructions in the following maneuvers:

a. vehicle checks:

i. pre-trip vehicle inspection—outside/inside vehicle;

b. turning skills:

i. steering;

ii. turn signals;

c. intersection awareness:

i. traffic signals;

ii. driving through;

iii. stops;

iv. right of way laws;

d. lane changes;

e. signs, lanes, and signals;

f. traffic signals;

g. space management;

h. S.I.P.D.E. process;

i. parking skills;

j. reversing skills;

k. turnabouts;

l. city driving;

m. expressway;

n. areas of high risk:

i. shared left turn lane;

ii. median crossover;

iii. service roads;

iv. off-road recovery;

v. head-on collisions;

vi. poor weather;

vii. skid recovery;

viii. controlled braking;

ix. night time driving;

o. railroad crossings;

p. emergency vehicles;

q. school buses;

r. breakdown/collision.

2. The instructor shall gauge and provide feedback relative to the driver's proficiency:

a. observation;

b. communication;

c. speed adjustment;

d. vehicle positioning;

e. time and space management;

f. hazard perception.

3. Student Assessment. During the last driving session with the student, the instructor shall perform a skills test to determine the student's ability to safely operate a vehicle. A score of 70 percent shall be attained to successfully pass the driver education course.

4. Upon completion of the eight-hour behind the wheel course, the instructor shall complete an in-depth assessment of the student's performance over each maneuver and skills covered above. The assessment shall be provided to the student and parent (if a minor) as a tool to continue driving instruction:

a. pre-trip preparation;

b. backing up;

c. accelerating and braking;

d. left turn;

e. right turn;

f. proper lane usage;

g. lane change;

h. obeying traffic signs and signals;

i. stopping.

5. The driver education completion certificate shall be completed when a student has attained a score of 80 percent or better on the written knowledge test and a score of 70 percent or better on the eight hour behind the wheel portion of the course.

E. Six Hour Pre-Licensing Course

1. The pre-licensing course requires 6 hours of classroom instruction covering the topics outlined above under Subsection I, "Program of Instruction/Course Content." No more than 1 1/2 hours (25 percent) of the course may consist of audiovisual instruction. A minimum of 4 1/2 hours (75 percent) shall consist of formalized instruction which may be a combination of lecture, computer format plus classroom discussion. The audiovisuals may include such aids as films, slides or videos specifically designed to supplement the formalized instruction.

2. Six Hour Curriculum. The six hour pre-licensing course shall utilize a condensed version of the 30 hour classroom course and shall cover the basic components of each chapter outlined in the 30 hour classroom course.

3. Comprehensive Summation of Unit(s)/Unit Test(s) and Final Examination. Unit tests for each chapter and the final examination scores shall be averaged to attain the final grade for the course. The student shall attain a grade of 80 percent or more to successfully complete the course.

4. Driver Education Completion Certificate. The driver education completion certificate shall be issued when a student has attained a score of 80 percent or better on the written knowledge test.

AUTHORITY NOTE: Promulgated in accordance with R.S. 32:402.1(A) (1) AND R.S. 40:1461.

HISTORICAL NOTE: Promulgated by the Department of Public Safety and Corrections, Office of Motor Vehicles, LR 38:1985 (August 2012).

§155. Third Party Tester/Examiner Requirements

A. Act 307 of the 2011 legislative session amended R.S. 32:408 to require all driver education providers to become certified as third party testers by June 30, 2012.

B. All persons seeking to become certified by and contract with DPS to be a third party tester to administer the road skills test pursuant to R.S. 32:408 shall meet the following requirements:

1. successfully complete an OMV sanctioned examiners course;

2. meet all qualifications of a driving school owner as outlined in §145, Qualifications for Private Driving School Owners and Instructors;

C. Qualifications for a Third Party Tester Examiner

1. An examiner shall meet all requirements for a behind the wheel instructor listed in this part in addition to the following:

a. successful completion of the Office of Motor Vehicle certified examiner training course.

AUTHORITY NOTE: Promulgated in accordance with R.S. 32:402.1(A) (1) AND R.S. 40:1461.

HISTORICAL NOTE: Promulgated by the Department of Public Safety and Corrections, Office of Motor Vehicles, LR 38:1989 (August 2012).

§156. Application Process and Fees for Third Party Testers/Examiners

A. Each person requesting to be certified by and contract with DPS as a third party tester shall submit the following:

1. completed third party tester application for class D and E driver's license;

2. certificate of insurance as outlined in this Subchapter;

3. completed application for examiner license;

4. non-refundable $50 annual application fee for each tester location, which shall be collected biennially and a $25 non-refundable annual application fee for each examiner, which shall be collected biennially, in the form of a money order, certified check or public school check made payable to DPS;

5. If the applicant is not a currently licensed driving school owner or instructor, each applicant must successfully pass a fingerprint background check. The background check will be conducted in a manner set forth by DPS. Each applicant must pay the background check fee by a separate certified check or money order. The current fee is $26.

6. If the applicant is not a currently licensed driving school owner, all documents required to verify that the applicant meets the qualifications for a driving school owner as outlined in this part, must be submitted.

B. Each applicant for third party examiner certification shall submit the following:

1. completed application for third party examiner certification;

2. If the applicant is not a currently licensed driving school instructor, each applicant must successfully pass a fingerprint background check. The background check will be conducted in a manner set forth by DPS. Each applicant must pay the background check fee by a separate certified check or money order. The current fee is $26.

3. If the applicant is not a currently licensed driving school instructor, all documents required to verify that the applicant meets the qualifications for a driving school owner as outlined in this part, must be submitted.

C. Renewal

1. The renewal schedule is December 31 each year for privately owned facilities and August 31 for secondary school facilities.

2. Application for renewal of certification shall be made on the prescribed form, accompanied by a non-refundable fee of $100 for each location and $50 for each individual examiner certificate, in the form of a money order or a certified check made payable to DPS. No personal or business checks will be accepted.

3. All renewal applications for privately owned schools shall be submitted to the Office of Motor Vehicles before the close of business, October 1, of the renewal year. All renewal applications for secondary and alternative schools shall be submitted to the Office of Motor Vehicles before the close of business, June 1, of the renewal year.

4. All renewal applications for third party testers and examiners which are licensed driver education providers shall be submitted in conjunction with the renewal for the driver education programs.

5. Applications received after the deadline, will be deemed untimely and may cause delay in renewal of the license. A third party tester which has submitted an untimely renewal application and who has not been certified prior to the expiration of the current certificate, shall not be authorized to conduct any road skills tests after that certificate expires, until the license is renewed.

6. Incomplete renewal applications may result in the license renewal being delayed or denied.

7. Background checks on owners and examiners will be conducted upon license renewal.

8. The following documents shall be submitted as part of the renewal packet:

a. completed application for each location;

b. completed application for each examiner;

c. certificate of insurance in the company name stating that all vehicles are currently insured and that upon cancellation or expiration, the Training and Certification Unit of Office of Motor Vehicles shall be notified. This certificate shall be from the issuing insurance carrier, not the agency; identify (by description and vehicle identification number) the vehicle(s) covered. The limits shall be $500,000 in auto liability and $1,000,000 in general liability;

d. a non-refundable fee of $50 for each location and $25 for each individual examiner certificate, in the form of a money order or a certified check made payable to DPS. No personal or business checks will be accepted.

e. completed background check forms and certified check or money order for $26 for each examiner and owner for facilities that are not driving schools.

9. Any facility that fails to renew his license/contract within six months of expiration, shall be required to begin the initial application process again.

AUTHORITY NOTE: Promulgated in accordance with R.S. 32:402.1(A)(1) AND R.S. 40:1461.

HISTORICAL NOTE: Promulgated by the Department of Public Safety and Corrections, Office of Motor Vehicles, LR 38:1990 (August 2012).

§157. General Regulations for Third Party Testers

A. General Regulations

1. Upon approval of the application, all third party testers shall execute a contract with DPS authorizing them to administer the road skills test.

2. All third party examiners shall comply with and abide by all applicable statutes and regulations as well as all terms of the contract executed by the third party tester or third party examiner and DPS.

3. The school shall agree to permit DPS representatives to inspect the school and shall make

available to DPS, when requested to do so, full information pertaining to any or all items of information pertaining to the testing operation. Upon request, the school shall provide photo copies of the school's records required by DPS.

4. A representative of the Federal Highway Administration and/or a DPS representative may conduct random examinations, inspections, and audits without prior notice.

5. The facility shall conspicuously display the issued certificate in the business during operational hours.

6. The tester and/or examiner shall not assist a person in obtaining a driver's license by deceptive practices.

7. The tester and/or examiner shall not state or imply, that upon completion of the road skills test, the securing of a driver's license is guaranteed or assured.

8. A DPS representative shall annually take a road skills test administered by the licensed third party examiner or test a sample of drivers who were examined by the third party to compare pass/fail results.

9. A third party tester/examiner shall not commence administering the road skills test until authorized to do so by DPS.

10. If at any time, a third party tester/examiner ceases to meet any requirement imposed by statute, the regulations, or the contract, the third party tester or the third party examiner shall immediately cease all testing.

11. Each student administered the road skills test shall be notified, prior to testing, that he is subject to being retested by the Office of Motor Vehicles at any time.

12. Private driving schools may administer road skills tests to the general public. Authorized Secondary School Driver education program providers shall administer road skills tests only to students enrolled in his school or his driver education program.

13. All third party examiners shall submit to and receive approval from DPS of a test route for use in the administration of skills testing to driver applicants for each location approved by DPS. The route shall be different from the routes used during any eight hour behind the wheel training.

B. Record Keeping

1. When the student requires the administration of a road skills test, the following information shall be maintained in the records, in date order, and shall be maintained for five years from the date of the road skills test:

a. completed application for road skills test (DPSMV2271);

b. completed disclosure of terms for applicants (DPSMV2273);

c. completed road skills driving test (DPSMV2005A);

d. completed test history form (DPSMV30059) furnished by DPS, if applicable;

e. completed road skills test certificate (DPSMV 2272), if applicable.

2. Every Third Party Tester shall maintain an ascending numerical accounting record of all certificates issued. The records and all unused road skills test certificates shall be opened for inspection by DPS during normal business hours.

3. The tester shall submit a monthly report of the skills test performed the previous month. The report shall list by week the number of skills tests given, the number of tests passed, the number of tests failed and total all categories listed above for the month. This report shall be submitted by the tenth of the month in the format and delivery method prescribed by OMV.

C. Safety and Insurance

1. A certificate of insurance shall be filed with DPS in the business name stating that all vehicles utilized in the road skills test administration are currently insured and that upon cancellation or expiration, the training and Certification Unit, Office of Motor Vehicles will be notified. This certificate shall be from the issuing insurance carrier, not the agency; identify (by description and vehicle identification number) the vehicle(s) covered. The limits shall be $500,000 in auto liability and $1,000,000 in general liability.

2. If the school is covered under a fleet policy and desires to add another vehicle to its fleet, it shall advise the insurance company to notify DPS, in writing that this unit (specifying the make, model and vehicle identification number) has been added.

3. The examiner may refuse to administer the test at any time he determines the condition of the applicant, roads, or weather to be unsafe.

D. Road Skills Test Certificate (DPSMV 2272) Requirements

1. Road skills test certificates shall be issued to applicants who successfully complete a road skills test as approved by the Office of Motor Vehicles.

2. No third party tester shall issue a certificate to a person who has not successfully completed the approved road skills test.

3. All blank road skills tests certificates shall be kept in a secure place under lock and key and only available to those representatives of the third party tester authorized to issue such certificates and DPS representatives.

4. Lost or stolen road skills test certificates shall be reported to DPS immediately. If a theft or suspected theft has occurred, the local law enforcement agency shall also be notified and a police report sent to OMV immediately.

E. Testing Preparation Policies

1. Each applicant shall be required to present proof of identity as outlined in the Office of Motor Vehicles policy along with the completed Test History form provided by the Office of Motor Vehicles.

2. The legal custodial/domiciliary parent/guardian of an applicant under the age of 18 shall sign a consent statement, provide proper identification and provide proof that he or she is the legal custodial/domiciliary parent/guardian.

3. All applicants shall sign the Disclosure of Terms form supplied by OMV. If the applicant is under the age of 18, the legal custodial/domiciliary parent/guardian shall also sign. This form shall be kept in the files.

4. The fee for a road skills tests shall not exceed $40. This shall cover all expenses including the cost of the original and one additional copy of the road skills test certificate provided to each applicant.

5. A copy of the certificate shall be placed in the applicant's file and maintained by the tester for a minimum of five years.

6. Only examiners which are certified adaptive driver trainers shall administer road skills tests to applicants that require adaptive equipment, including bioptic telescopic lenses.

F. Test Administration Policies

1. Only examiners who have been approved and certified by DPS shall administer road skills tests.

2. Only the applicant, examiner, examiner's supervisor, DPS representative, or interpreter, if necessary, are allowed in the vehicle when a road skills test is being administered.

3. Each driving course layout shall include (as a minimum) the following for scoring purposes:

a. two stop signs (one with an obstructed view, if possible);

b. two traffic lights;

c. two lane changes;

d. two intersections, without a turn;

e. two reversal procedures—options:

i. into and out of a parking space;

ii. three point turn;

f. three left turns, one of which includes a left turn onto a multiple-lane roadway;

g. three right turns, one of which includes a right turn onto a multiple-lane roadway;

h. one parking maneuver.

4. In the administration of the road skills test, each third party examiner shall measure the performance of the applicant in each of the following operational skills:

a. observing;

b. communicating;

c. speed adjustment;

d. vehicle positioning;

e. time and space judgment;

f. hazard perception.

5. Standardized instructions shall be utilized when conducting a road skills test.

6. Approved scoring criteria shall be standardized, as determined and approved by DPS. If using a vehicle with a dual brake, it shall be an automatic failure of the test if the examiner has to use the brake for any reason.

G. Suspension, Revocation and Penalty Assessment

1. All regulations outlined in this chapter shall be adhered to by the school and its employees. DPS may suspend or revoke any third party tester certification or examiner license issued under these rules and regulations upon discovery of satisfactory evidence of violations. If the violation involves the owner of the school or other management staff, then the driving school will be assessed penalties or the license may be suspended or revoked. If the violation involves the instructor, then the instructor may be fined or the instructor's license may be suspended or revoked, depending on the nature of the violation. Fines may be assessed up to $500. If the fine is not paid, the license shall be revoked.

2. Any third party tester/examiner whose certification or license is denied, suspended, or revoked, or who was assessed a fine shall have the right to appeal the action in the same manner as provided in §151, Regulations for All Driver Education Providers, Subsection D.

AUTHORITY NOTE: Promulgated in accordance with R.S. 32:402.1(A)(1) AND R.S. 40:1461, and R.S. 32:408.1.

HISTORICAL NOTE: Promulgated by the Department of Public Safety and Corrections, Office of Motor Vehicles, LR 38:1990 (August 2012).

Jill P. Boudreaux
Undersecretary

1208#047

RULE

Department of Public Safety and Corrections
Office of State Police
Applied Technology Unit

Breath and Blood Alcohol Analysis
(LAC 55:I.501, 507, 509, 511, 514, 515 and 516)

Under the authority of R.S. 37:3270 et seq., and in accordance with the provisions of the Administrative Procedure Act, R.S. 49:950 et seq., the Office of State Police, Applied Technology Unit, amends LAC 55:I.501, 507, 509, 511 and 515 and adopts Sections 514 and 516 under Chapter 5 to add the Intoxilyzer 9000 to the approved product list of breath alcohol testing devices, to remove the current requirement for submitting information in the Intoxilyzer log book, and to amend the Hurricane Katrina and Rita language to provide for a general natural disaster provision.

The rules add the Intoxilyzer 9000 as an approved breath alcohol testing device in addition to the current Intoxilyzer 5000, remove the necessity of an Intoxilyzer log book and provide for a natural disaster provision.

Title 55
PUBLIC SAFETY
Part I. State Police

Chapter 5. Breath and Blood Alcohol Analysis Methods and Techniques

Subchapter A. Analysis of Breath

§501. Approval of Instruments to Conduct Blood Alcohol Analysis by Breath Sampling

A. After the Louisiana Department of Public Safety and Corrections has approved a prototype breath testing device as an acceptable model for chemical analysis in blood alcohol testing by breath sampling it shall be necessary for each individual instrument of the approved model to be inspected and approved for use by the Office of State Police, Applied Technology Unit, and an instrument certification form shall be maintained for each individual instrument in the Applied Technology Unit. At least once every four months thereafter for the Intoxilyzer 5000 and once every six months for the Intoxilyzer 9000, each individual instrument shall be inspected, checked, and certified by the applied technology director, breath analysis supervisor, breath analysis specialist, breath analysis instructor

specialist, or applied technology specialist of the Applied Technology Unit and a recertification form shall be maintained in the Applied Technology Unit. A copy of this certificate may be filed with clerk of the applicable court in the respective parish in which each device is used for blood/breath testing, and this copy shall be prima facie evidence as to the proper working order of the instrument. The inspecting applied technology director, breath analysis supervisor, breath analysis specialist, breath analysis instructor specialist, or applied technology specialist's permit number shall also be affixed to this certificate. Any manufacturer of any apparatus, device, or equipment made for the purpose of analyzing the alcoholic contents of the blood by breath sampling may request the Applied Technology Unit to approve such apparatus, device or equipment. The Applied Technology Unit will consider such a request upon submission of such information, instructions for use, exemplars and other pertinent data as the Applied Technology Unit may request. Before any blood/breath alcohol testing will be approved it must have undergone inspection and testing by the Applied Technology Unit. This period of testing and evaluation is for the purpose of assuring that an instrument is free of any design error, malfunction or operating problems and accurately and consistently determines the percent by weight by volume of alcohol in the blood at the time the test is administered by utilizing the 2100:1 correlation between alcohol in the breath and alcohol in the blood in accordance with the *Uniform Vehicle Code*.

B. - B.1. …

2. Intoxilyzer 9000, manufactured by CMI, Inc., a subsidiary of MPD, Inc. Every Intoxilyzer 9000 which has been certified and placed in operation in Louisiana is now and has been continuously, since the original certification, an approved instrument for the analysis of breath specimens for the determination of blood alcoholic content.

AUTHORITY NOTE: Promulgated in accordance with R.S. 32:663.

HISTORICAL NOTE: Promulgated by the Department of Public Safety, Office of State Police, LR 4:390 (October 1978), amended LR 6:660 (November 1980), amended by the Department of Public Safety and Correction, Office of State Police, LR 11:256 (March 1985), LR 17:362 (June 1988), repromulgated LR 14:441 (July 1988), amended LR 17:672 (July 1991), repromulgated LR 17:795 (August 1991), amended LR 18:1266 (November 1992), amended by the Department of Public Safety and Corrections, Office of State Police, Applied Technology Unit, LR 38:1992 (August 2012).

§507. Qualification of Individuals for Instrument Maintenance and Inspection

A. - B. …

C. The maintenance and/or repair work shall be performed by applied technology director, breath analysis supervisor, or breath analysis specialist, breath analysis instructor specialist, or applied technology specialist of the Applied Technology Unit, who are certified by the Louisiana Department of Public Safety and Corrections to perform such. The instrument recertification form that is filed with the clerks of the respective courts every four months for the Intoxilyzer 5000 and every six months for the Intoxilyzer 9000, shall also have the inspecting applied technology director, breath analysis supervisor, or breath analysis specialist, breath analysis instructor specialist, or applied technology specialist permit number affixed to this certificate. This permit number shall be proof as to the certification of the inspecting applied technology director, breath analysis supervisor, or breath analysis specialist, breath analysis instructor specialist or applied technology specialist by the Louisiana Department or Public Safety and Corrections.

D. The procedure used by applied technology director, breath analysis supervisor, or breath analysis specialist, breath analysis instructor specialist, or applied technology specialist in the inspections of the instrument at least every four months for the Intoxilyzer 5000 and at least every six months for the Intoxilyzer 9000, for the checking of the calibration shall be as follows.

D.1. - E. …

AUTHORITY NOTE: Promulgated in accordance with R.S. 32:663.

HISTORICAL NOTE: Promulgated by the Department of Public Safety, Office of State Police, LR 4:390 (October 1978), amended LR 6:662 (November 1980), amended by the Department of Public Safety and Corrections, Office of State Police LR 11:257 (March 1985), LR 14:362 (June 1988), repromulgated LR 14:442 (July 1988), amended LR 17:673 (July 1991), repromulgated LR 17:796 (August 1991), amended LR 27:1930 (November 2001), amended by the Department of Public Safety and Corrections, Office of State Police, Applied Technology Unit, LR 38:1993 (August 2012).

§509. Permits

A. - A.4. …

B. In the event of an emergency such as a natural disaster, the Applied Technology Unit may extend the permit card expiration date for up to an additional 180 days. The extension would only apply to the cards that would expire during the time the disaster occurred.

AUTHORITY NOTE: Promulgated in accordance with R.S. 32:663

HISTORICAL NOTE: Promulgated by the Department of Public Safety, Office of State Police, LR 4:392 (October 1978), amended LR 6:663 (November 1980), amended by the Department of Public Safety and Corrections, Office of State Police, LR 11:257 (March 1985), LR 14:363 (June 1988), repromulgated LR 14:443 (July 1988), amended LR 17:674 (July 1991), repromulgated LR 17:797 (August 1991), amended LR 27:1931 (November 2001), amended by the Department of Public Safety and Corrections, Office of State Police, Applied Technology Unit, LR 32:110 (January 2006), LR 38:1993 (August 2012).

§511. Recording Analysis and Recertification Date

A. The breath testing instrument(s) automatically stores all test records into a data bank.

B. …

AUTHORITY NOTE: Promulgated in accordance with R.S. 32:663.

HISTORICAL NOTE: Promulgated by the Department of Public Safety, Office of State Police, LR 4:392 (October 1978), amended LR 6:663 (November 1980), amended by the Department of Public Safety and Corrections, Office of State Police, LR 11:257 (March 1985), LR 14:364 (June 1988), repromulgated LR 14:443 (July 1988), amended LR 17:674 (July 1991), repromulgated LR 17:797 (August 1991), amended by the Department of Public Safety and Corrections, Office of State Police, Applied Technology Unit, LR 38:1993 (August 2012).

§514. Procedure for Analysis Using the Intoxilyzer 9000

A. General observation of the subject for a period of not less than 15 minutes prior to testing whereby the subject shall not have ingested alcohol, alcoholic beverage, regurgitated, vomited, or taken anything by mouth.

B. The operator conducting blood/breath analysis shall conduct such analysis in accordance with the "Intoxilyzer 9000 instrument display" which includes, but is not limited to the following:

1. swipe the operator card or press the start test button for instructions;

2. enter information as prompted by the instrument display;

3. new and clean mouthpiece attached to the breath inlet hose;

4. subject instructed to blow through the mouthpiece sufficiently until the instrument accepts the proper breath sample;

5. the subject test information is printed, electronically recorded, and retained by the Applied Technology Unit.

AUTHORITY NOTE: Promulgated in accordance with R.S. 32:663.

HISTORICAL NOTE: Promulgated by the Department of Public Safety and Corrections, Office of State Police, Applied Technology Unit, LR 38:1994 (August 2012).

§515. Maintenance Inspection for the Intoxilyzer 5000

A. - A.6. …

B. In the event of a natural disaster, the applied technology director may extend the certification period of the affected instruments to not more than 180 days after the current recertification anniversary date.

AUTHORITY NOTE: Promulgated in accordance with R.S. 32:663.

HISTORICAL NOTES: Promulgated by the Department of Public Safety, Office of State Police, LR 4:391 (October 1978), LR 11:259 (March 1985), LR 14:364 (June 1988), repromulgated LR 14:444 (July 1988), amended LR 17:675 (July 1991), repromulgated LR 17:798 (August 1991), amended by the Department of Public Safety and Corrections, Office of State Police, Applied Technology Unit, LR 32:110 (January 2006), LR 38:1994 (August 2012).

§516. Maintenance Inspection for the Intoxilyzer 9000

A.1. Maintenance inspection shall be performed on a routine basis at least once every six months by the applied technology director, breath analysis supervisor, breath analysis instructor specialist, or applied technology specialist. Items to be inspected shall include, but not be limited to the following:

a. clean instrument;

b. check printer operation;

c. check breath tube inlet hose.

2. In event repair work is needed, it shall be recorded in detail.

B. In the event of a natural disaster, the applied technology director may extend the certification period of the affected instruments to not more than 180 days after the current recertification anniversary date.

AUTHORITY NOTE: Promulgated in accordance with R.S. 32:663

HISTORICAL NOTE: Promulgated by the Department of Public Safety and Corrections, Office of State Police, Applied Technology Unit, LR 38:1994 (August 2012).

Jill P. Boudreaux
Undersecretary

1208#001

RULE

Department of Public Safety and Corrections
State Uniform Construction Code Council

Seismic Design and Electrical Code (LAC 55:VI.301)

In accordance with the provisions of R.S. 40:1730.26, relative to the authority of the Louisiana State Uniform Construction Code Council (LSUCCC) to promulgate and enforce rules, the LSUCCC hereby amends the following Rule regarding the establishment of minimum standards for seismic design to resist the effects of earthquakes.

Title 55
PUBLIC SAFETY
Part VI. Uniform Construction Code
Chapter 3. Adoption of the Louisiana State Uniform Construction Code

§301. Louisiana State Uniform Construction Code

A. - A.1.a.iii. …

iv. Amend chapter 16, section 1613.1 Scope. Every structure, and portion thereof, including nonstructural components that are permanently attached to structures and their supports and attachments, shall be designed and constructed to resist the effects of earthquake motions in accordance with ASCE7, excluding Chapter 14 and Appendix 11A. The seismic design category for a structure is permitted to be determined in accordance with Section 1613 or ASCE 7-10. Figure 1613.5(1) shall be replaced with ASCE 7-10 Figure 22-1. Figure 1613.5(2) shall be replaced with ASCE 7-10 Figure 22-2.

v. Amend chapter 23, section 2308.2, exceptions 4. Wind speeds shall not exceed 110 miles per hour (mph) (48.4m/s) (3-second gust) for buildings in exposure category B.

2. - 6. …

7. National Electric Code (NEC), 2011 Edition. This Code is to become effective on January 1, 2013.

AUTHORITY NOTE: Promulgated in accordance with R.S. 40:1730.22(C) and (D) and 40:1730.26(1).

HISTORICAL NOTE: Promulgated by the Department of Public Safety and Corrections, State Uniform Construction Code Council, LR 33:291 (February 2007), amended LR 34:93 (January 2008), LR 34: 883 (May 2008), LR 34:2205 (October 2008), LR 35:1904 (September 2009), LR 36:2574 (November 2010), effective January 1, 2011, LR 37:601 (February 2011), LR 37:913 (March 2011), repromulgated LR 37:2187 (July 2011), repromulgated LR 37:2726 (September 2011), LR 37:3065 (October 2011); LR 38:1994 (August 2012).

Jill P. Boudreaux
Undersecretary

1208#075

RULE

Department of Revenue
Policy Services Division

Certain Self-Propelled Vehicles
Removed from Inventory (LAC 61:I.4415)

Under the authority of R.S. 47:1511, and in accordance with the provisions of the Administrative Procedure Act, R.S. 49:950 et seq., the Department of Revenue, Policy Services Division, repeals LAC 61:I.4415, which provides criteria for determining whether sales or use tax is due upon items of equipment described in R.S. 47:305.22. That statute was repealed by Act 2005, No. 413, so the Rule no longer serves any purpose.

Title 61
REVENUE AND TAXATION
Part I. Taxes Collected and Administered by the Secretary of Revenue
Chapter 44. Sales and Use Tax Exemptions
§4415. Certain Self-Propelled Vehicles Removed from Inventory

Repealed.

AUTHORITY NOTE: Promulgated in accordance with R.S. 47:305.22.

HISTORICAL NOTE: Promulgated by the Department of Revenue and Taxation, Sales Tax Section, LR 13:107 (February 1987), repealed by the Department of Revenue, Policy Services Division, LR 38:1995 (August 2012).

Jane Smith
Acting Secretary

1208#124

RULE

Department of Revenue
Policy Services Division

Payment of Sales and Use Taxes by Persons Constructing, Altering, or Repairing Immovable Property (LAC 61:I.4372)

Under the authority of R.S. 47:1511, and in accordance with the provisions of the Administrative Procedure Act, R.S. 49:950 et seq., the Department of Revenue, Policy Services Division, adopts LAC 61:I.4372. This Rule provides that the contractors who purchase or import tangible personal property that they or their contractors, subcontractors, or agents will use in the construction, alteration, or repair of immovable property and such tangible personal property is transferred to the final customer from the contractor in an immovable state, then in such cases the contractors are presumed liable for the taxes imposed by the state sales and use law and by the sales tax ordinances of political subdivisions of the state on their purchases or importations of such tangible personal property.

There is a long line of jurisprudence in Louisiana which holds that contractors are users and consumers of tangible personal property, rather than re-sellers. The Louisiana Supreme Court has issued several decisions so holding, including *State v. J. Watts Kearny & Sons*, 181 La. 554, 160 So. 77 (La. 1935); *State v. Owin*, 191 La. 617, 186 So. 46 (La. 1938); *Claiborne Sales Co. v. Collector of Revenue*, 42981 (La. 11/27/57), 99 So.2d 345; *Chicago Bridge & Iron Co. v. Cocreham*, 55769 (La. 6/23/75), 317 So.2d 605; and *Bill Roberts, Inc. v. McNamara*, 88-1776 (La. 3/13/89), 539 So.2d 1226.

The payment of sales or use taxes on materials purchased or imported for use on immovable property contracts is routine for most contractors, so this Rule does not affect their business practices. In a minority of cases, however, mostly on transactions for the repair or alteration of immovable property, some service providers and contractors have engaged in the practice of invoicing customers separately for materials used in providing the service, and collecting and remitting sales taxes on the separate materials charges. In such cases, the service providers have not themselves paid sales or use taxes on their acquisitions of the materials for their use on the real property repair or alteration projects, but have instead treated the materials as purchases of tangible personal property for resale.

In some cases, contractors invoicing sales taxes on materials used on immovable property contracts have not reflected the true nature of the transactions. Customers have submitted claims to the department and to local sales tax administrators for refund of sales taxes that they have remitted to their service providers pursuant to those invoices. The filing of these claims has placed tax authorities in the position of having to determine, very often, without the benefit of written contracts, the nature of the transactions that occurred between two parties. Tax authorities' payment of such claims has resulted in no sales or use taxes being paid on the materials used in the projects, either as tax paid by the service providers on their purchases or as tax collected and remitted by the service providers. Tax authorities believe that having a presumption concerning the tax liability is necessary in order to protect the public fisc and to provide guidance to service providers and contractors as to the proper methods for the payment of sales and use taxes. Since this Rule imposes a rebuttable presumption, it does not interfere with the parties' freedom to contract in cases where tangible personal property is actually sold to the customer, and not just used in providing a service. The presumption may be overcome by evidence as to the nature of the transaction.

The Louisiana Department of Revenue has repealed Revenue Ruling No. 05-001, issued on March 1, 2005, which, in discussing alternative means for the payment of sales or use taxes on transactions for the repair and alteration of immovable property, placed undue emphasis on the form or wording of the invoice.

Title 61
REVENUE AND TAXATION
Part I. Taxes Collected and Administered by the Secretary of Revenue
Chapter 43. Sales and Use Tax
§4372. Payment of Sales and Use Taxes by Persons Constructing, Renovating, or Altering Immovable Property

A. General. The purpose of this Section is to help clarify which party to the transaction is liable for the payment of sales and use taxes on the purchase, use, consumption, distribution, or storage for use or consumption of tangible personal property in this state when such property is used in the construction, alteration, or repair of an immovable

property, and such tangible personal property is transferred from the contractor to its customer in an immovable state.

B. Definition. For the purposes of this Section, the term *contractor* means any dealer, as defined in this Chapter, who contracts or undertakes to construct, manage, or supervise the construction, alteration, or repair of any immovable property, such as buildings, houses, roads, levees, pipelines, oil and gas wells (downhole), and industrial facilities. It also includes subcontractors. The term *contractor* shall not include a dealer who fabricates or constructs property that is sold to another person as tangible personal property, provided that the fabricator or constructor of the tangible personal property does not affix that tangible personal property to the buyer's immovable property.

C. Sales of tangible personal property, including materials, supplies, and equipment, made to contractors, or their contractors, subcontractors, or agents, for use in the construction, alteration, or repair of immovable property are presumed to be sales to consumers or users, not sales for resale, and therefore the contractor is liable for the taxes imposed by this Chapter on their purchases or importations of such tangible personal property. This presumption may be rebutted by a showing of credible evidence, such as a writing signed by the contractor's customer stating that title and/or possession of itemized articles of tangible personal property were transferred to the customer prior to their being made immovable.

AUTHORITY NOTE: Promulgated in accordance with R.S. 47:1511.

HISTORICAL NOTE: Promulgated by the Department of Revenue, Policy Services Division, LR 38:1995 (August 2012).

Jane Smith
Acting Secretary

1208#125

RULE

Department of Treasury
Louisiana Housing Corporation

Turnkey Mortgage Origination Program
(LAC 16:II.Chapter 7)

Under the authority of R.S. 40:600.91(A)(3), and in accordance with the provisions of the Administrative Procedure Act, R.S. 49:950 et seq., the Louisiana Housing Corporation adopts the Turnkey Mortgage Origination Program. The program will allow the Louisiana Housing Corporation to extend down payment and closing cost assistance to a broad spectrum homebuyers in the state.

Title 16
COMMUNITY AFFAIRS
Part II. Housing Programs
Chapter 7. Turnkey Mortgage Origination Program

§701. Introduction

A. The Turnkey Mortgage Origination Program is designed to provide citizens of the state of Louisiana additional opportunities to obtain funds for down payment and closing costs toward the purchase of single family homes in the state.

AUTHORITY NOTE: Promulgated in accordance with R.S. 40:600.1 et seq.

HISTORICAL NOTE: Promulgated by the Department of Treasury, Louisiana Housing Corporation, LR 38:1996 (August 2012).

§703. Definitions

A. Notwithstanding the definitions set forth in LAC 16:I.301, the following terms, when used in this Chapter, are defined as follows.

Annual Family Income—the gross annual income, from all sources and before taxes or withholding, of all members of a family living in a housing unit.

Borrower—an individual or family applying to receive down payment assistance under the Turnkey Mortgage Origination Program.

Housing Unit—living accommodations intended for occupancy by a single family, consisting of one to four units, and which will be owned by the occupant thereof.

AUTHORITY NOTE: Promulgated in accordance with R.S. 40:600.1 et seq.

HISTORICAL NOTE: Promulgated by the Department of Treasury, Louisiana Housing Corporation, LR 38:1996 (August 2012).

§705. Eligible Borrowers

A. Borrowers will be determined to be eligible for assistance if they meet the following criteria.

1. The applicant is seeking assistance towards the purchase of a housing unit in the state, whether purchasing as a first time homebuyer or a non-first time homebuyer.

2. The applicant will occupy the property as his primary residence. Applicants seeking to purchase properties for use as recreational homes, second homes, vacation homes, and/or investment properties are not eligible to receive assistance.

3. The applicant's annual household income must not exceed established income limits as defined by the provisions set forth in the LAC 16:I.303.B, which limit is currently a maximum of $99,000 per year.

4. The applicant meets the minimum credit score determined by the lender as based upon the product selected for assistance, but in no instance shall be lower than 620.

AUTHORITY NOTE: Promulgated in accordance with R.S. 40:600.1 et seq.

HISTORICAL NOTE: Promulgated by the Department of Treasury, Louisiana Housing Corporation, LR 38:1996 (August 2012).

§707. Processing and Qualifications of Borrowers Applications

A. An application for a mortgage loan shall be processed by a lending institution on behalf of the agency on the basis of the agency's evaluation criteria. The lending institution shall undertake its own due diligence and other matters as may be determined to be appropriate to insure that the proposed loan is consistent in all respects with the agency's evaluation factors.

B. When processing mortgage loan applications lenders must adhere to the published acquisition cost limits and or maximum loan sizes as defined by the Federal Housing Administration, Veterans Administration, Rural Development.

C. Upon completion of the processing and approval of the application, the lending institution shall initiate a loan closing.

AUTHORITY NOTE: Promulgated in accordance with R.S. 40:600.1 et seq.

HISTORICAL NOTE: Promulgated by the Department of Treasury, Louisiana Housing Corporation, LR 38:1996 (August 2012).

§709. Interest Rates

A. The interest rates charged by the lending institution for a borrowers mortgage loan shall be monitored and adjusted as needed based on the current market rates.

AUTHORITY NOTE: Promulgated in accordance with R.S. 40:600.1 et seq.

HISTORICAL NOTE: Promulgated by the Department of Treasury, Louisiana Housing Corporation, LR 38:1997 (August 2012).

§711. Types of Assistance and Proscribed Use

A. Down payment assistance will be available at loan closing by the mortgage lender.

1. The maximum down payment assistance is 5 percent.

2. Borrowers will pay a 1 percent origination fee and 1 percent discount point.

B. The assistance will be in the form of a non-repayable grant with no cash back to the borrower.

C. Assistance may be applied toward down payment, closing costs and pre-paid items.

AUTHORITY NOTE: Promulgated in accordance with R.S. 40:600.1 et seq.

HISTORICAL NOTE: Promulgated by the Department of Treasury, Louisiana Housing Corporation, LR 38:1997 (August 2012).

Don J. Hutchinson
Interim Executive Director

1208#077

RULE

Department of Wildlife and Fisheries
Wildlife and Fisheries Commission

Feral Hog Trapping (LAC 76:V.130)

The Department of Wildlife and Fisheries, Wildlife and Fisheries Commission does hereby promulgate rules for trapping of feral hogs.

Title 76
WILDLIFE AND FISHERIES
Part V. Wild Quadrupeds and Wild Birds
Chapter 1. Wild Quadrupeds

§130. Feral Hog Trapping

A. Feral hogs may be trapped in cage or corral traps year-round by holders of a valid basic hunting license. Feral hogs may captured by use of snares year-round by holders of a valid trapping license.

B. Cage or corral traps must have an opening in the top of the trap that is no smaller than 22 inches x 22 inches or 25 inches in diameter.

AUTHORITY NOTE: Promulgated in accordance with R.S. 56:115 and 56:116.

HISTORICAL NOTE: Promulgated by the Department of Wildlife and Fisheries, Wildlife and Fisheries Commission, LR 38:1997 (August 2012).

Ann L. Taylor
Chairman

1208#017

RULE

Department of Wildlife and Fisheries
Wildlife and Fisheries Commission

Vessel Monitoring Systems
Oyster Seed Ground Vessel Permit
(LAC 76:VII.371 and 525)

The Wildlife and Fisheries Commission hereby establishes rules and regulations which require the use of vessel monitoring systems for use by a vessel taking oysters for commercial purposes under the authority of the oyster seed ground vessel permit. Data collected through this system will enable the department to better manage the public oyster resource and allow the department to assess where reef building efforts need to be focused increasing accessibility to the industry over time.

The secretary of the Department of Wildlife and Fisheries is authorized to take any and all necessary steps on behalf of the commission to promulgate and effectuate this final Rule, including but not limited to, the filing of the Fiscal and Economic Impact Statement, the filing of the Notice of Intent and final Rule and the preparation of reports and correspondence to other agencies of government.

Title 76
WILDLIFE AND FISHERIES
Part VII. Fish And Other Aquatic Life
Chapter 3. Saltwater Sport and Commercial Fishery

§371. Vessel Monitoring System (VMS) Requirements

A. The following provision regarding VMS shall be applicable to all provisions of law requiring the use of VMS except where required by R.S. 56:433.1 and LAC 76:VII.525.

1. The vessel must have onboard a fully operational and approved VMS Device. Approved devices are those devices approved by NOAA Fisheries Service or the Secretary of the Louisiana Department of Wildlife and Fisheries (LDWF) for fisheries in the Gulf of Mexico Reef Fish fishery and which meet the minimum performance criteria specified in Paragraph 2 of this Subsection. In the event that a VMS device is removed from the list of approved devices, vessel owners who installed an approved VMS prior to approval of any revised list will be considered in compliance with requirements of this Paragraph, unless otherwise notified by the LDWF.

2. Minimum VMS Performance Criteria. Basic required features of the VMS are as follows.

a. The VMS shall be satellite-based and tamper proof, i.e., shall not permit the input of false positions; furthermore, satellite selection must be automatic to provide an optimal fix and shall not be capable of being manually overridden.

b. The VMS shall be fully automatic and operational at all times, regardless of weather and environmental conditions.

c. The VMS shall be fully operable and capable of tracking the vessel in all of Louisiana coastal waters and throughout the Gulf of Mexico.

d. The VMS shall be capable of transmitting and storing information including vessel identification, date, time and latitude/longitude.

e. The VMS unit shall make all required transmissions to a designated and approved VMS vendor who shall be responsible for monitoring the vessel and reporting information to the LDWF.

f. The VMS shall provide accurate position transmissions every half-hour, except for those vessels operating solely under the out-of-state landing permit mentioned in Paragraph 3 that require accurate position transmissions every hour, every day of the year, during required monitoring period. In addition, the VMS shall allow polling of individual vessels or any set of vessels at any time and permit those monitoring the vessel to receive position reports in real time. For the purposes of this specification, real time shall constitute data that reflect a delay of 15 minutes or less between the displayed information and the vessel's actual position.

g. The VMS vendor shall be capable of transmitting position data to a LDWF designated computer system via a modem at a minimum speed of 9600 baud. Transmission shall be in a file format acceptable to the LDWF. Such transmission must be made at any time upon demand of the LDWF.

h. The VMS vendor shall be capable of archiving vessel position histories for a minimum of three months, as transmitted by the VMS unit, and provide transmissions to the LDWF of specified portions of archived data in response to LDWF requests in a variety of media (tape, compact disc, etc.) as specified by the LDWF.

3. Operating Requirements. Except as provided in Paragraph 4 (power down exemption) of this Subsection, or unless otherwise required by law, all required VMS units must transmit a signal indicating the vessel's accurate position at least every half hour, 24 hours a day, throughout the year. However, those vessels operating solely under the out-of-state landing permit shall transmit a signal indicating the vessel's accurate position at least every hour, 24 hours a day throughout the year.

4. Power Down Exemption. Any vessel required to have on board a fully operational VMS unit at all times, as specified in Paragraph 3 of this Subsection, is exempt from this requirement provided:

a. the vessel will be continuously out of the water for more than 72 consecutive hours; and

b. a valid letter of exemption obtained pursuant to Subparagraph 5.a. of the Subsection has been issued to the vessel and is on board the vessel is in compliance with all conditions and requirements of said letter.

5. - 11. …

AUTHORITY NOTE: Promulgated in accordance with R.S. 56:424, R.S. 56:424.1, R.S. 56:495.1, R.S. 56:497.1, and R.S. 56:433.1.

HISTORICAL NOTE: Promulgated by the Department of Wildlife and Fisheries, Wildlife and Fisheries Commission, LR 34:888 (May 2008), amended LR 38:1997 (August 2012).

Chapter 5. Oysters

§525. Commercial Oyster Seed Ground Vessel Permit

A. - D. ...

E. Operations

1. Permits are non-transferable and only the vessel listed on the permit can be used with the permit and only one vessel is allowed per permit. The original valid permit must be onboard at all times while operating under the permit.

2. Permits cannot be assigned or transferred or used by any other vessel than the one to which permit was issued.

3. Vessels engaged in an activity for which this permit is required must have onboard the vessel the valid original permit and shall show the permit upon demand to a duly authorized agent of the department.

4. The secretary shall have the authority to require the use of a vessel monitoring system (VMS) for use by a vessel taking oysters for commercial purposes under the authority of the oyster seed ground vessel permit in accordance with R.S. 56:433.1. All equipment, installation, and service costs associated with this requirement shall be paid for by the department. The secretary shall review this requirement annually for management needs and funding availability and may, at his sole discretion, make the determination to continue the requirement.

a. All vessels operating under the authority of the oyster seed ground vessel permit will be required to have a VMS on board which is fully operable and recording data while vessel is fishing on public oyster seed grounds.

i. In instances where funding is limited, the secretary may choose a sub-sample of vessels through use of a random selection process, geographic area, and/or trip ticket landings data.

b. Owners of vessels requiring the use of VMS will be notified of such requirement by certified mail at the address listed on their permit.

c. Notwithstanding applicable requirements pursuant to provisions in LAC 76:VII.371, any vessel required to use VMS under this provision must use the VMS system provided by the department.

d. Presumption. If a VMS unit fails to record or transmit the required signal of a vessel's position (identified by the indicator light), the vessel shall be deemed to have incurred a VMS violation, for as long as the unit fails to record or transmit a signal, unless a preponderance of evidence shows that the failure to transmit was due to an unavoidable malfunction, or disruption of the transmission that occurred while the vessel was declared out of the fishery, as applicable, or was not at sea. If the indicator light is on, then the unit is presumed to be functioning properly; however, if the indicator light is off then the unit is presumed to not be recording or transmitting. The permit holder shall have an affirmative duty to immediately notify the Department of Wildlife and Fisheries (LDWF) if the VMS fails to record or transmit the required signal or if the indicator light indicates such a failure.

e. Replacement. If the indicator light on the VMS unit is not working, then upon notification to LDWF, a new

unit shall be re-installed in no later than seven days. During the period without a functional VMS unit, it is the affirmative duty of the permit holder to report daily to LDWF, prior to departure, the vessel's anticipated fishing location and estimated time on water, and upon return, the vessel's actual fishing location and time on water.

f. Access. All vessel owners shall allow the LDWF, and their authorized wildlife enforcement agents or designees access to the vessel's VMS unit and data, if applicable, and location data obtained from its VMS unit, if required, at the time of or after its transmission to the vendor or receiver, as the case may be.

g. Tampering. Tampering with a VMS, a VMS unit, or a VMS signal, is prohibited. Tampering includes any activity that is likely to affect the unit's ability to operate properly, signal, or accurately compute the vessel's position fix.

h. Violation. Failure to abide by any regulation set forth by this Section regarding the use or operation of a VMS by a vessel taking oysters for commercial purposes under the authority of the oyster seed ground vessel permit, shall be a violation of the Louisiana Revised Statutes and shall result in immediate revocation of the permit governed herein and shall constitute a class 1 violation under the authority of R.S. 56:23. All fish taken or possessed by a person in violation of these rules shall be deemed illegally taken and possessed. The provisions of this Section do not exempt any person from any other laws, rules, regulation, and license requirements for this or other jurisdictions.

F. - G. …

AUTHORITY NOTE: Promulgated in accordance with R.S. 36:610(L), R.S. 56:6, R.S. 56:23, and R.S. 56:433.1.

HISTORICAL NOTE: Promulgated by the Department of Wildlife and Fisheries, Wildlife and Fisheries Commission, LR 34:2681 (December 2008), amended LR 38:1998 (August 2012).

Ann L. Taylor
Chairman

1208#016

RULE

Department of Wildlife and Fisheries
Office of the Secretary

Wild Seafood Certification Program (LAC 76:I.Chapter 7)

The secretary of the Department of Wildlife and Fisheries hereby establishes the Louisiana Wild Seafood Certification Program (R.S. 56:578.15). This program shall establish rules and guidelines throughout the seafood supply chain that will enable the state of Louisiana through its various agencies to certify seafood products possessing the program label are taken, landed, and processed in Louisiana. This seafood certification program strives to increase consumer confidence and increase demand for Louisiana seafood. The primary mission with this origin based certification program is to build a unified brand that will attract not only consumers but also food service and seafood distribution buyers who want to be sure they are sourcing the best tasting seafood in the world—Louisiana seafood.

The secretary of the Department of Wildlife and Fisheries is authorized to take any and all necessary steps to promulgate and effectuate this final Rule, including but not limited to, the filing of the Fiscal and Economic Impact Statement, the filing of the Notice of Intent and final Rule and the preparation of reports and correspondence to other agencies of government.

Title 76
WILDLIFE AND FISHERIES
Part I. Wildlife and Fisheries Commission and Agencies Thereunder
Chapter 7. Louisiana Wild Seafood Certification Program

§701. Declaration of Policy, Purposes, and Intent

A. In order to establish a certification program for Louisiana wild fish, as defined in R.S. 56:8, and for Louisiana wild seafood products, including wild-caught shrimp, which are taken, harvested, or landed in Louisiana, pursuant to the authority conferred by R.S. 56:578.15; the following rules in this Chapter shall govern any work related to the Louisiana Wild Seafood Certification Program (LWSCP).

B. For the purpose of this Chapter, the following will be defined as:

Commingled—to cause to blend together, mix or combine; particularly as it applies to mixing non-certified seafood with LWSCP products.

Landed—taken and brought ashore.

LDAF—Louisiana Department of Agriculture and Forestry.

LDHH—Louisiana Department of Health and Hospitals.

LDWF—Louisiana Department of Wildlife and Fisheries.

LWSCP—Louisiana Wild Seafood Certification Program.

Packaged—product that is contained in a closed and sealed package or container for sale which contains product labeling and designated weight.

Processed—any method of preparing fish or fish products for market including drying to a point of dehydration, canning, salting, freezing, breading, or cooking for immediate consumption; but not simple packing of fresh fish in a sack, bag, package, crate, box, lug or vat for transport or holding.

Origin Test—method of verifying product was taken from the Gulf of Mexico or Louisiana waters.

C. Policy

1. Participation in the LWSCP is voluntary and limited to those individuals or entities meeting the following criteria:

a. must possess one of the following resident or non-resident Louisiana licenses: commercial fisherman's license; senior commercial license; fresh products dealer license; seafood wholesale/retail dealer; seafood retail dealer;

b. wholesale/retail dealers must have their facility located within Louisiana. Retailers are not required to have their facility located within Louisiana;

c. eligible participants not requiring a LDWF license include in-state restaurants or grocers who only sell seafood that is fully prepared by cooking for immediate consumption by the consumer, and all out-of state retailers.;

d. must possess and be in compliance with all other state and federal permits, licenses, and laws regarding the buying, acquiring, or handling, from any person, by any

means whatsoever, any species of fish or seafood products, whether fresh, frozen, processed, or unprocessed, for sale or resale, whether on a commission basis or otherwise. Including but not limited to any LDWF, LDHH or LDAF permits or regulations.

2. Product considered eligible to possess the LWSCP logo must meet the following criteria:

a. eligible wild seafood includes crab, oysters, freshwater finfish, saltwater finfish, crawfish, and shrimp. Seafood must be wild-caught, taken from Louisiana waters or from the Gulf of Mexico and any other adjacent state waters, and landed in Louisiana. Farmed and/or aquaculture products are excluded from program participation;

b. seafood must be taken by a Louisiana licensed commercial fisherman. Seafood must be landed in Louisiana and either be sold under an LWSCP participating fish products dealer license, or be purchased and/or physically acquired by a wholesale/retail seafood dealer participating in the LWSCP. Transfer of product throughout the supply chain must be between LWSCP participants until the product has been placed in a sealed and LWSCP label retail packing;

c. seafood commingled with any other seafood that does not meet the above requirements, domestic or foreign, shall be prohibited from possessing the LWSCP label.

AUTHORITY NOTE: Promulgated in accordance with R.S. 56:578.15 and R.S. 56:23.

HISTORICAL NOTE: Promulgated by the Department of Wildlife and Fisheries, Office of the Secretary, LR 38:1999 (August 2012).

§703. Application and Permitting Process

A. Excluding commercial fishermen, each person wishing to participate in the LWSCP must apply for and receive a permit. Only one permit shall be issued per location or LDWF license. Permits are non-transferable, and shall only be valid for the location or LDWF license listed on the permit.

B. Commercial fishermen will be automatically eligible to participate in the LWSCP by possessing a valid Louisiana commercial fisherman license or senior commercial license.

C. There shall be four types of permits issued.

1. Fresh Products Dealer Licensee. Anyone that applies using a Louisiana Fresh Products Dealer License shall be classified under this permit type.

2. Wholesale/Retail Dealer. Any dock/landing, dealer, processor, vehicle, or other person that applies using a Louisiana wholesale/retail dealer's license shall be classified under this permit type.

3. Retail Dealer—inside Louisiana. Any Louisiana based seafood market, grocer, restaurant, or vehicle that applies as a retailer, or other person that applies using a Louisiana Retail Dealer's License shall be classified under this permit type.

4. Retail Dealer—outside of Louisiana. Any out-of-state seafood market, grocer, restaurant, vehicle, or other person that applies as a retailer shall be classified under this permit type.

D. Permits are valid for one year, beginning on January 1 of each calendar year and expiring December 31 of the same calendar year.

E. No person shall sell, barter, trade, or exchange, or attempt to sell, barter, trade, or exchange LWSCP labeled seafood, or use the LWSCP logo for promotional and/or marketing purposes without possessing a valid LWSCP permit.

1. A permit is not required for persons selling prepackaged LWSCP labeled products.

F. Applications shall only be submitted by the individual named on the license under which the application is being made. In cases where the named individual is a business, applications shall be submitted by the business's registered agent, officers, or designated employee.

G. New applications shall be accompanied by a certificate of completion showing the individual named on the application completed the initial program training. Retailers are exempt from the program training requirements.

H. Applications for the LWSCP shall be accepted at any time of the year for the current calendar year, and from November 15 for the immediately following calendar year. Applicants must show proof of having acquired all necessary licenses and permits. All information requested must be provided before the application is processed and a permit issued.

I. All applicants shall be notified of their permit status by mail at the address listed on their application.

AUTHORITY NOTE: Promulgated in accordance with R.S. 56:578.15 and R.S. 56:23.

HISTORICAL NOTE: Promulgated by the Department of Wildlife and Fisheries, Office of the Secretary, LR 38:2000 (August 2012).

§705. Logo Use Guidelines and Standards

A. Logo use is restricted to fresh products dealers wholesale/retail dealers, and retailers that have a valid LWSCP permit

B. The "Certified Authentic Louisiana Wild Seafood" trademark (the "logo," shown below) shall only be used in accordance with the certification standards filed with the United States Patent and Trademark Office (USPTO). The logo shall only be used by participants in the LWSCP who are in compliance with the program rules and regulations. Further, the logo shall only be used on or in connection with product which complies with the program rules and regulations. Product and associated paperwork/records bearing the logo, or with which the logo is used, must be made available for inspection upon request.

C. All uses of the logo must adhere to the specific guidelines filed with the USPTO.

D. Only the electronic logo files that are made available to LWSCP participants for download may be used to create

the logo. Further, LWSCP participants must follow these additional guidelines.

1. The logo shall not be used on top of complex visuals or photography that bars readability.

2. The logo's proportions shall not be changed in any way and shall always remain 1.78 times as wide as it is tall.

3. The minimum size of the logo on product packaging shall be 0.73 inches tall by 1.3 inches wide.

4. No photocopy of the logo shall be used on any materials.

5. Labels using the logo shall have a clear or white background. Labels shall only be professionally printed with indelible ink on moisture-proof, cold-temperature adhesive material. Non-adhesive paper for labels shall not be used.

E. The following are allowable uses for this logo by program participants:

1. printing of the logo directly on LWSCP product packaging;

2. printing of the logo on adhesive labels to be attached to LWSCP product packaging;

3. use on promotional materials featuring LWSCP product (e.g. table tents, recipe cards, point-of-sale signage, etc.), or their participation in the LWSCP program;

4. use on restaurant menus to designate items using LWSCP product;

5. print and television advertising promoting the participant's use of LWSCP product or their participation in the LWSCP program;

6. fresh product displays in retail/grocery venues with "ice picks" or other signage clearly identifying LWSCP product;

7. on-site signage such as banners and posters promoting LWSCP product availability;

8. use on websites, mobile applications, and other digital mediums that promote the participant's use of LWSCP product or their participation in the LWSCP program;

9. printing or distribution by packaging distributor of packaging material with the LWSCP logo, to any persons who are not in the program shall be deemed a violation of this Section.

F. When the logo is used to represent product in a retail location or menu items in a restaurant location, each location must clearly identify which product or menu items are LWSCP products.

G. The secretary may authorize use of the logo in materials promoting the LWSCP.

AUTHORITY NOTE: Promulgated in accordance with R.S. 56:578.15 and R.S. 56:23.

HISTORICAL NOTE: Promulgated by the Department of Wildlife and Fisheries, Office of the Secretary, LR 38:2000 (August 2012).

§707. Operations

A. Purchasing and/or transferring of seafood intended for use in the LWSCP.

1. Commercial fishermen intending to sell or transfer seafood for use in the LWSCP shall be responsible for ensuring that the seafood was taken legally from Louisiana waters or the waters of the Gulf of Mexico and either sold under a LWSCP participating fresh products dealer license, or landed at and sold to a wholesale/retail dealer possessing a LWSCP permit.

2. Wholesale/retail dealers possessing a permit and intending to, purchase, sell, transfer or exchange seafood for use in the LWSCP, which is labeled with the programs logo shall be responsible for ensuring LWSCP labeled/destined seafood is sourced from and sold/transferred to parties that meet the minimum requirements of the program.

3. Retail dealers possessing a permit and intending to purchase, sell, transfer, or exchange unpackaged seafood for use in the LWSCP label shall be responsible for ensuring that the seafood is supplied by a wholesale/retail dealer who possesses a LWSCP permit and that the product meets the minimum requirements of the program.

4. LWSCP seafood must remain segregated from non-program seafood throughout the supply chain and must be marked or labeled with "LWSCP" or the program logo at all times. Seafood which is processed must be processed separately from non-program seafood.

5. A website shall be made available to all LWSCP participants to allow them to verify the permit status of potential suppliers and buyers. Participants are required to share their contact information with other participants for verification purposes via the previously mentioned website. Participants may also contact LDWF designee to verify someone's permit status.

B. Packaging, Repackaging, and Unpacking

1. No person shall package or repackage seafood intended to be sold under the LWSCP name and/or labeled with the LWSCP logo without possessing a LWSCP permit.

2. All packaging and repackaging of LWSCP seafood shall take place in Louisiana

3. Repackaged LWSCP seafood shall not be mixed with seafood not meeting LWSCP requirements. Doing so shall constitute a commingling program violation.

4. Packaged products labeled with the LWSCP logo may be sold by persons not possessing a permit provided the product remains in its original packaging until sold to the consumer.

5. No person shall sell, barter, trade, or exchange, or attempt to sell, barter, trade, or exchange unpackaged seafood under the LWSCP name and logo without possessing a LWSCP permit.

C. Notwithstanding all other provisions of law regarding record keeping and reporting requirements for the sale, trade, or bartering of seafood persons possessing a wholesale/retail dealer permit or retail dealer permit shall adhere to the following requirements regarding record keeping as they pertain to seafood sold under the LWSCP.

1. Seafood sold or attempted to be sold under the LWSCP name or logo must be designated as such on all records, invoices, bills of lading, and transfer documents using "LWSCP."

AUTHORITY NOTE: Promulgated in accordance with R.S. 56:578.15 and R.S. 56:23.

HISTORICAL NOTE: Promulgated by the Department of Wildlife and Fisheries, Office of the Secretary, LR 38:2001 (August 2012).

§709. Monitoring and Enforcement

A. Upon submission of permit application, LDWF shall validate the applicant's required licenses and permits and check for any LWSCP related convictions. Any violations found shall be treated in a manner consistent with Section H of this provision

B. Program applicable LDWF, LDHH, and LDAF violations shall be reported to LWSCP program monitors on a regular basis. Any convictions found shall be treated in a manner consistent with Section H of this provision.

C. Product containing the LWSCP label, and all required records associated with such product, must be made available upon request of any LDWF, LDAF, or LDHH agent for inspection and sampling to ensure certification standards are being followed. Failure to comply shall result in removal of the product from the market (R.S. 56:578.15(B)) and shall be considered a record keeping violation as described in Section H of this provision.

D. Product samples may be taken to conduct DNA or protein based country of origin tests. Discovery of any foreign product shall be considered as commingling under Section H of this provision and may result in fines and penalties notwithstanding those associated with LWSCP.

E. LWSCP Violations

1. Any violation of the above LWSCP program rules shall constitute a class 1 violation under the authority of R.S. 56:23. The provisions of this Section do not exempt any person from other laws, rules, regulation, and license requirements for this or other jurisdictions.

2. If any required licenses or permits (LDWF, LDAF, LDHH) are revoked or temporarily suspended, the participant shall be automatically removed from the LWSCP and shall not be able to use the LWSCP logo. When the license(s) or permit(s) are reinstated, participant can be reinstated into the LWSCP via the renewal application process.

3. The following program violations involving LWSCP labeled seafood product shall result in its seizure: commingling non-certified seafood with certified seafood, intentional misrepresentation of program seafood, any trademark infringement practices with LWSCP trademark and trade name, fraudulent trip tickets and/or record keeping, and short weight violations. Any seizures or forfeitures of LWSCP labeled seafood product or materials shall be disposed of in accordance with LAC 76:I.B.305.

4. The department shall not issue a permit to any person convicted of the following offenses for the specified length of time from date of conviction.

Offense	Ineligible Period
Commingling non-certified seafood into certified program packaging	36 months
Misrepresentation of program seafood	36 months
Any trademark infringement practices with LWSCP trademark and trade name	36 months
Falsification or lack of trip tickets or other sales records, invoices, or bills of lading required by the program	36 months
Submission of fraudulent LWSCP application	36 months
Short weights	First offense 12 months; second offense 36 months
Scale tampering	First offense 12 months; second offense 36 months
Not adhering to labeling guidelines	First offense 12 months; second offense 36 months

AUTHORITY NOTE: Promulgated in accordance with R.S. 56:578.15 and R.S. 56:23.

HISTORICAL NOTE: Promulgated by the Department of Wildlife and Fisheries, Office of the Secretary, LR 38:2001 (August 2012).

Robert J. Barham
Secretary

1208#015

Notices of Intent

NOTICE OF INTENT

Department of Children and Family Services
Division of Programs
Licensing Section

Foster Care/Substitute Family Care
(LAC 67:V.Chapter 63)

The Department of Children and Family Services (DCFS), Division of Programs, Licensing Section in accordance with provisions of the Administrative Procedure Act, R.S. 49:953(A) proposes to repeal LAC 67:V, Subpart 8, Chapter 63 Foster Care/Substitute Family Care. Chapter 63 is being repealed as the chapter includes regulations that govern adult foster care. Act 128 of the 2005 Regular Legislative Session repealed the department's statutory authority for adult foster care. Statutory authority for adult foster care was given to the Department of Health and Hospitals (DHH). Substitute family care programs are governed by LAC 48:1, Chapter 50 promulgated by DHH effective January 2012.

Title 67
SOCIAL SERVICES
Part V. Child Welfare
Subpart 8. Residential Licensing

Chapter 63. Foster Care/Substitute Family Care

§6301. Definitions

Repealed.

AUTHORITY NOTE: Promulgated in accordance with R.S. 36:477 and R.S. 46:1401-1424.

HISTORICAL NOTE: Promulgated by the Department of Health and Human Resources, Office of the Secretary, Division of Licensing and Certification, LR 13:246 (April 1987), repromulgated by the Department of Social Services, Office of the Secretary, Bureau of Residential Licensing, LR 33:2679 (December 2007), repromulgated by the Department of Social Services, Office of Community Services, LR 35:1554 (August 2009), amended LR 36:784 (April 2010), repealed by the Department of Children and Family Services, Division of Programs, Licensing Section, LR 38:

§6303. Qualifications

Repealed.

AUTHORITY NOTE: Promulgated in accordance with R.S. 36:477 and R.S. 46:1401-1424.

HISTORICAL NOTE: Promulgated by the Department of Health and Human Resources, Office of the Secretary, Division of Licensing and Certification, LR 13:246 (April 1987), repromulgated by the Department of Social Services, Office of the Secretary, Bureau of Residential Licensing, LR 33:2679 (December 2007), repromulgated by the Department of Social Services, Office of Community Services, LR 35:1554 (August 2009), amended LR 36:785 (April 2010), repealed by the Department of Children and Family Services, Division of Programs, Licensing Section, LR 38:

§6305. Personal Characteristics

Repealed.

AUTHORITY NOTE: Promulgated in accordance with R.S. 36:477 and R.S. 46:1401-1424.

HISTORICAL NOTE: Promulgated by the Department of Health and Human Resources, Office of the Secretary, Division of Licensing and Certification, LR 13:246 (April 1987), repromulgated by the Department of Social Services, Office of the Secretary, Bureau of Residential Licensing, LR 33:2680 (December 2007), repromulgated by the Department of Social Services, Office of Community Services, LR 35:1555 (August 2009), amended LR 36:785 (April 2010), repealed by the Department of Children and Family Services, Division of Programs, Licensing Section, LR 38:

§6307. Professional Responsibilities

Repealed.

AUTHORITY NOTE: Promulgated in accordance with R.S. 36:477 and R.S. 46:1401-1424.

HISTORICAL NOTE: Promulgated by the Department of Health and Human Resources, Office of the Secretary, Division of Licensing and Certification, LR 18:246 (April 1987), repromulgated by the Department of Social Services, Office of the Secretary, Bureau of Residential Licensing, LR 33:2680 (December 2007), repromulgated by the Department of Social Services, Office of Community Services, LR 35:1555 (August 2009), amended LR 36:786 (April 2010), repealed by the Department of Children and Family Services, Division of Programs, Licensing Section, LR 38:

§6309. Client Care and Treatment

Repealed.

AUTHORITY NOTE: Promulgated in accordance with R.S. 36:477 and R.S. 46:1401-1424.

HISTORICAL NOTE: Promulgated by the Department of Health and Human Resources, Office of the Secretary, Division of Licensing and Certification, LR 13:246 (April 1987), repromulgated by the Department of Social Services, Office of the Secretary, Bureau of Residential Licensing, LR 33:2681 (December 2007), repromulgated by the Department of Social Services, Office of Community Services, LR 35:1556 (August 2009), amended LR 36:787 (April 2010), repealed by the Department of Children and Family Services, Division of Programs, Licensing Section, LR 38:

§6311. Medical and Dental

Repealed.

AUTHORITY NOTE: Promulgated in accordance with R.S. 36:477 and R.S. 46:1401-1424.

HISTORICAL NOTE: Promulgated by the Department of Health and Human Resources, Office of the Secretary, Division of Licensing and Certification, LR 13:246 (April 1987), repromulgated by the Department of Social Services, Office of the Secretary, Bureau of Residential Licensing, LR 33:2683 (December 2007), repromulgated by the Department of Social Services, Office of Community Services, LR 35:1558 (August 2009), amended LR 36:788 (April 2010), repealed by the Department of Children and Family Services, Division of Programs, Licensing Section, LR 38:

§6313. Medications

Repealed.

AUTHORITY NOTE: Promulgated in accordance with R.S. 36:477 and R.S. 46:1401-1424.

HISTORICAL NOTE: Promulgated by the Department of Health and Human Resources, Office of the Secretary, Division of Licensing and Certification, LR 13:246 (April 1987), repromulgated by the Department of Social Services, Office of the Secretary, Bureau of Residential Licensing, LR 33:2683 (December 2007), repromulgated by the Department of Social Services, Office of Community Services, LR 35:1558 (August 2009), amended LR 36:788 (April 2010), repealed by the Department of Children and Family Services, Division of Programs, Licensing Section, LR 38:

§6315. Seizure Log

Repealed.

AUTHORITY NOTE: Promulgated in accordance with R.S. 36:477 and R.S. 46:1401-1424.

HISTORICAL NOTE: Promulgated by the Department of Health and Human Resources, Office of the Secretary, Division of Licensing and Certification, LR 13:246 (April 1987), repromulgated by the Department of Social Services, Office of the Secretary, Bureau of Residential Licensing, LR 33:2683 (December 2007), repromulgated by the Department of Social Services, Office of Community Services, LR 35:1558 (August 2009), amended LR 36:788 (April 2010), repealed by the Department of Children and Family Services, Division of Programs, Licensing Section, LR 38:

§6317. Recreation and Community Activities

Repealed.

AUTHORITY NOTE: Promulgated in accordance with R.S. 36:477 and R.S. 46:1401-1424.

HISTORICAL NOTE: Promulgated by the Department of Health and Human Resources, Office of the Secretary, Division of Licensing and Certification, LR 13:246 (April 1987), repromulgated by the Department of Social Services, Office of the Secretary, Bureau of Residential Licensing, LR 33:2683 (December 2007), repromulgated by the Department of Social Services, Office of Community Services, LR 35:1558 (August 2009), amended LR 36:789 (April 2010), repealed by the Department of Children and Family Services, Division of Programs, Licensing Section, LR 38:

§6319. Education, Training and Employment

Repealed.

AUTHORITY NOTE: Promulgated in accordance with R.S. 36:477 and R.S. 46:1401-1424.

HISTORICAL NOTE: Promulgated by the Department of Health and Human Resources, Office of the Secretary, Division of Licensing and Certification, LR 13:246 (April 1987), repromulgated by the Department of Social Services, Office of the Secretary, Bureau of Residential Licensing, LR 33:2684 (December 2007), repromulgated by the Department of Social Services, Office of Community Services, LR 35:1558 (August 2009), amended LR 36:789 (April 2010), repealed by the Department of Children and Family Services, Division of Programs, Licensing Section, LR 38:

§6321. Exterior Environment

Repealed.

AUTHORITY NOTE: Promulgated in accordance with R.S. 36:477 and R.S. 46:1401-1424.

HISTORICAL NOTE: Promulgated by the Department of Health and Human Resources, Office of the Secretary, Division of Licensing and Certification, LR 13:246 (April 1987), repromulgated by the Department of Social Services, Office of the Secretary, Bureau of Residential Licensing, LR 33:2684 (December 2007), repromulgated by the Department of Social Services, Office of Community Services, LR 35:1559 (August 2009), amended LR 36:789 (April 2010), repealed by the Department of Children and Family Services, Division of Programs, Licensing Section, LR 38:

§6323. Play Area

Repealed.

AUTHORITY NOTE: Promulgated in accordance with R.S. 36:477 and R.S. 46:1401-1424.

HISTORICAL NOTE: Promulgated by the Department of Health and Human Resources, Office of the Secretary, Division of Licensing and Certification, LR 13:246 (April 1987), repromulgated by the Department of Social Services, Office of the Secretary, Bureau of Residential Licensing, LR 33:2684 (December 2007), repromulgated by the Department of Social Services, Office of Community Services, LR 35:1559 (August 2009), amended LR 36:789 (April 2010), repealed by the Department of Children and Family Services, Division of Programs, Licensing Section, LR 38:

§6325. Kitchen

Repealed.

AUTHORITY NOTE: Promulgated in accordance with R.S. 36:477 and R.S. 46:1401-1424.

HISTORICAL NOTE: Promulgated by the Department of Health and Human Resources, Office of the Secretary, Division of Licensing and Certification, LR 13:246 (April 1987), repromulgated by the Department of Social Services, Office of the Secretary, Bureau of Residential Licensing, LR 33:2684 (December 2007), repromulgated by the Department of Social Services, Office of Community Services, LR 35:1559 (August 2009), amended LR 36:789 (April 2010), repealed by the Department of Children and Family Services, Division of Programs, Licensing Section, LR 38:

§6327. Dining Area

Repealed.

AUTHORITY NOTE: Promulgated in accordance with R.S. 36:477 and R.S. 46:1401-1424.

HISTORICAL NOTE: Promulgated by the Department of Health and Human Resources, Office of the Secretary, Division of Licensing and Certification, LR 13:246 (April 1987), repromulgated by the Department of Social Services, Office of the Secretary, Bureau of Residential Licensing, LR 33:2684 (December 2007), repromulgated by the Department of Social Services, Office of Community Services, LR 35:1559 (August 2009), amended LR 36:789 (April 2010), repealed by the Department of Children and Family Services, Division of Programs, Licensing Section, LR 38:

§6329. Living Room

Repealed.

AUTHORITY NOTE: Promulgated in accordance with R.S. 36:477 and R.S. 46:1401-1424.

HISTORICAL NOTE: Promulgated by the Department of Health and Human Resources, Office of the Secretary, Division of Licensing and Certification, LR 13:246 (April 1987), repromulgated by the Department of Social Services, Office of the Secretary, Bureau of Residential Licensing, LR 33:2684 (December 2007), repromulgated by the Department of Social Services, Office of Community Services, LR 35:1559 (August 2009), amended LR 36:789 (April 2010), repealed by the Department of Children and Family Services, Division of Programs, Licensing Section, LR 38:

§6331. Bedrooms

Repealed.

AUTHORITY NOTE: Promulgated in accordance with R.S. 36:477 and R.S. 46:1401-1424.

HISTORICAL NOTE: Promulgated by the Department of Health and Human Resources, Office of the Secretary, Division of Licensing and Certification, LR 13:246 (April 1987), repromulgated by the Department of Social Services, Office of Community Services, LR 35:1559 (August 2009), amended LR 36:789 (April 2010), repealed by the Department of Children and Family Services, Division of Programs, Licensing Section, LR 38:

§6333. Bathrooms

Repealed.

AUTHORITY NOTE: Promulgated in accordance with R.S. 36:477 and R.S. 46:1401-1424.

HISTORICAL NOTE: Promulgated by the Department of Health and Human Resources, Office of the Secretary, Division of Licensing and Certification, LR 13:246 (April 1987), repromulgated by the Department of Social Services, Office of the Secretary, Bureau of Residential Licensing, LR 33:2685 (December 2007), repromulgated by the Department of Social Services, Office of Community Services, LR 35:1560 (August 2009), amended LR 36:790 (April 2010), repealed by the Department of Children and Family Services, Division of Programs, Licensing Section, LR 38:

§6335. General Safety

Repealed.

AUTHORITY NOTE: Promulgated in accordance with R.S. 36:477 and R.S. 46:1401-1424.

HISTORICAL NOTE: Promulgated by the Department of Health and Human Resources, Office of the Secretary, Division of Licensing and Certification, LR 13:246 (April 1987), repromulgated by the Department of Social Services, Office of the Secretary, Bureau of Residential Licensing, LR 33:2685 (December 2007), repromulgated by the Department of Social Services, Office of Community Services, LR 35:1560 (August 2009), amended LR

36:790 (April 2010), repealed by the Department of Children and Family Services, Division of Programs, Licensing Section, LR 38:

§6337. Fire Safety

Repealed.

AUTHORITY NOTE: Promulgated in accordance with R.S. 36:477 and R.S. 46:1401-1424.

HISTORICAL NOTE: Promulgated by the Department of Health and Human Resources, Office of the Secretary, Division of Licensing and Certification, LR 13:246 (April 1987), repromulgated by the Department of Social Services, Office of the Secretary, Bureau of Residential Licensing, LR 33:2685 (December 2007), repromulgated by the Department of Social Services, Office of Community Services, LR 35:1560 (August 2009), amended LR 36:790 (April 2010), repealed by the Department of Children and Family Services, Division of Programs, Licensing Section, LR 38:

§6339. Health and Sanitation

Repealed.

AUTHORITY NOTE: Promulgated in accordance with R.S. 36:477 and R.S. 46:1401-1424.

HISTORICAL NOTE: Promulgated by the Department of Health and Human Resources, Office of the Secretary, Division of Licensing and Certification, LR 13:246 (April 1987), repromulgated by the Department of Social Services, Office of the Secretary, Bureau of Residential Licensing, LR 33:2685 (December 2007), repromulgated by the Department of Social Services, Office of Community Services, LR 35:1560 (August 2009), amended LR 36:790 (April 2010), repealed by the Department of Children and Family Services, Division of Programs, Licensing Section, LR 38:

§6341. Transportation

Repealed.

AUTHORITY NOTE: Promulgated in accordance with R.S. 36:477 and R.S. 46:1401-1424.

HISTORICAL NOTE: Promulgated by the Department of Health and Human Resources, Office of the Secretary, Division of Licensing and Certification, LR 13:246 (April 1987), repromulgated by the Department of Social Services, Office of the Secretary, Bureau of Residential Licensing, LR 33:2685 (December 2007), repromulgated by the Department of Social Services, Office of Community Services, LR 35:1560 (August 2009), amended LR 36:790 (April 2010), repealed by the Department of Children and Family Services, Division of Programs, Licensing Section, LR 38:

Family Impact Statement

1. What effect will this Rule have on the stability of the family? There will be no impact on the stability of the family as the Department of Health and Hospitals was given statutory authority for adult foster care.

2. What effect will this have on the authority and rights of persons regarding the education and supervision of their children? There will be no impact on the authority and rights of persons regarding the education and supervision of their children.

3. What effect will this have on the functioning of the family? There will be no impact on the functioning of the family.

4. What effect will this have on family earnings and family budget? There will be no impact on family earnings and family budget.

5. What effect will this have on the behavior and personal responsibility of children? There will be no effect on the behavior and personal responsibility of children.

6. Is the family or local government able to perform the function as contained in this proposed Rule? No, this is strictly a function of the Department of Health and Hospitals (DHH) as statutory authority for substitute family care programs was given to DHH by Act 128 of the 2005 Regular Session of the Legislature.

Small Business Statement

The impact of the proposed Rule on small businesses as defined in the Regulatory Flexibility Act has been considered. It is estimated that the proposed action is not expected to have a significant adverse impact on small businesses. The agency, consistent with health, safety, environmental and economic welfare factors has considered and, where possible, utilized regulatory methods in the drafting of the proposed Rule that will accomplish the objectives of applicable statutes while minimizing the adverse impact of the proposed Rule on small businesses.

Public Comments

All interested persons may submit written comments through September 27, 2012, to Sammy Guillory, Deputy Assistant Secretary, Department of Children and Family Services, Division of Programs, Post Office Box 94065, Baton Rouge, LA, 70821-9065.

Public Hearing

A public hearing on the proposed Rule will be held on September 27, 2012, at the Department of Children and Family Services, Iberville Building, 627 N. Fourth Street, Seminar Room 1-127, Baton Rouge, LA, beginning at 9:00 a.m. All interested persons will be afforded an opportunity to submit data, views, or arguments, orally or in writing, at said hearing. Individuals with disabilities who require special services should contact the DCFS Appeals Bureau at least seven working days in advance of the hearing. For assistance, call area code (225) 342-4120 (voice and TDD).

Suzy Sonnier
Secretary

FISCAL AND ECONOMIC IMPACT STATEMENT FOR ADMINISTRATIVE RULES
RULE TITLE: Foster Care/Substitute Family Care

I. ESTIMATED IMPLEMENTATION COSTS (SAVINGS) TO STATE OR LOCAL GOVERNMENT UNITS (Summary)

This rule proposes to repeal *Louisiana Administrative Code* (LAC) 67, Part V, Subpart 8, Chapter 63 Foster Care/Substitute Family Care.

Act 128 of the 2005 Regular Legislative Session repealed the statutory authority of the Department of Children and Family Services (DCFS) to regulate adult foster care. As a result of Act 128, adult foster care and substitute family care programs are now governed by the Department of Health and Hospitals (DHH) in accordance with LAC 48:1, Chapter 50 effective January 2012. Therefore, DCFS shall repeal Chapter 63 because it includes regulations that govern adult foster care that is now under the authority of DHH.

The only cost associated with this proposed rule is the cost of publishing of rulemaking, which is estimated to be approximately $1,968 in State General Fund in FY 13. This is a one-time cost that is routinely included in the department's annual operating budget.

II. ESTIMATED EFFECT ON REVENUE COLLECTIONS OF STATE OR LOCAL GOVERNMENTAL UNITS (Summary)

There is no estimated effect on revenue collections of state or local governmental units.

III. ESTIMATED COSTS AND/OR ECONOMIC BENEFITS TO DIRECTLY AFFECTED PERSONS OR NONGOVERNMENTAL GROUPS (Summary)

There are no estimated costs and/or economic benefits to directly affected persons or non-governmental groups.

IV. ESTIMATED EFFECT ON COMPETITION AND EMPLOYMENT (Summary)

There is no estimated impact on competition and employment.

Sammy Guillory	Evan Brasseaux
Deputy Assistant Secretary	Staff Director
1208#088	Legislative Fiscal Office

NOTICE OF INTENT

Department of Economic Development
Office of Business Development

Competitive Projects Payroll Incentive Program
(LAC 13:I.Chapter 43)

The Department of Economic Development, Office of Business Development, as authorized by and pursuant to the provisions of the Administrative Procedure Act, R.S. 49:950 et seq., and R.S. 36:104 hereby proposes to enact Sections 4301 through 4311 for the administration of the newly created Competitive Projects Payroll Incentive Program as LAC 13:I.Chapter 43.

Title 13
ECONOMIC DEVELOPMENT
Part I. Financial Incentive Programs
Chapter 43. Competitive Projects Payroll Incentive Program

§4301. General

A. The Competitive Projects Payroll Incentive Program (the "program") provides an incentive rebate of up to 15 percent of a participating company's new payroll. The secretary ("secretary") of the Louisiana Department Economic Development ("LED") may invite businesses who meet the eligibility requirements to participate in the program.

AUTHORITY NOTE: Promulgated in accordance with Act 507 of the 2012 Regular Session of the Louisiana Legislature.

HISTORICAL NOTE: Promulgated by the Department of Economic Development, Office of Business Development, LR 38:

§4303. Eligibility Requirements; Invitation to Participate; Application

A. The secretary may invite a business to participate in the program, upon determining the business meets all of the following criteria:

1. at least 50 percent of the total annual sales of the business from its Louisiana site or sites is to out-of-state customers or buyers, or to in-state customers or buyers who resell the product or service to an out-of-state customer or buyer for ultimate use, or to the federal government, or any combination thereof;

2. the business will primarily engage in one of the following activities at the project site:

a. manufacturing of the following types of durable goods: automobiles, motorcycles or other passenger vehicles, or components thereof; aircraft or components thereof; spacecraft or components thereof; medical devices; batteries or other power storage devices; motors, engines, turbines or components thereof; environmental control systems; household appliances; computers, computer peripherals or components thereof; communications equipment; audio or video equipment; semiconductors; consumer-oriented electronic devices or components thereof; industrial machinery; or construction heavy equipment such as excavators;

b. manufacturing of pharmaceutical products;

c. conversion of natural gas to diesel, jet fuel, or other refined fuels;

d. data storage or data services, provided that at least 75 percent of sales meet the out-of-state sales requirements of Subparagraph (1)(a) of this Subsection; or

e. other activities as recommended by the secretary and approved by the Joint Legislative Committee on the Budget; and

f. the business offers or will offer a basic health benefits plan to individuals it employs within 90 days of the effective date of qualifying for the incentive rebates pursuant to R.S. 51:3111;

3. the following types of businesses shall not be eligible for participation in the program:

a. a business engaged in gaming or gambling;

b. a business primarily engaged in natural resource extraction or exploration, unless the project activity is the conversion of natural gas to diesel, jet fuel, or other refined fuels; or

c. a business primarily engaged in retail sales, real estate, professional services, financial services, venture capital funds, shipbuilding, wood products, agriculture, or manufacturing of machinery or equipment primarily intended to serve the energy industry.

B. At the invitation of the secretary, a business may apply for participation in the program by submitting certified statements and substantiating documents as required by LED.

AUTHORITY NOTE: Promulgated in accordance with Act 507 of the 2012 Regular Session of the Louisiana Legislature.

HISTORICAL NOTE: Promulgated by the Department of Economic Development, Office of Business Development, LR 38:

§4305. Contract Approval

A. Contract. The secretary shall determine the terms and conditions of the contract, including the term, rebate rate, maximum rebate amount, performance obligations and the consequences of any failure to perform such obligations.

B. Approval

1. The secretary may request approval of the contract by the Joint Legislative Committee on the Budget upon determining that:

a. the business meets all eligibility requirements;

b. participation in the program is needed in a highly competitive site selection situation to encourage the business to locate the project in the state; and

c. securing the project will result in significant positive economic benefit to the state.

3. The Joint Legislative Committee on the Budget may approve the contract for the business' participation in the program for an initial term of up to five years, renewable at the discretion of the secretary for up to an additional five years.

4. Upon approval of the contract, LED shall submit a copy of the contract to the Louisiana Department of Revenue.

AUTHORITY NOTE: Promulgated in accordance with Act 507 of the 2012 Regular Session of the Louisiana Legislature.

HISTORICAL NOTE: Promulgated by the Department of Economic Development, Office of Business Development, LR 38:

§4307. Contract Renewal

A. Upon application by a qualified business, and LED's determination that the business continues to meet eligibility requirements and contract performance obligations, the secretary may renew the contract for an additional period of up to five years. LED shall submit a copy of the renewal to the Louisiana Department of Revenue.

AUTHORITY NOTE: Promulgated in accordance with Act 507 of the 2012 Regular Session of the Louisiana Legislature.

HISTORICAL NOTE: Promulgated by the Department of Economic Development, Office of Business Development, LR 38:

§4309. Annual Certification of Eligibility

A. The qualified business must submit certification (signed by a key employee of the business) that it continues to meet all eligibility requirements of the program as well as all performance obligations of the contract by September 1 of each year unless the contract designates another reporting deadline. A company's failure to submit the annual certification of eligibility by the deadline provided for in this section shall result in the forfeiture of benefits for the previous tax year and the secretary, in his discretion, may terminate the contract. LED may require an audit of any annual certification at the expense of the qualified business.

B. Annually, LED will verify that a participating company continues to meet the eligibility requirements of the program as well as performance obligations of the contract and submit the rebate claim to the Louisiana Department of Revenue for payment.

C. If a business fails to maintain the eligibility requirements for participation in the program or fails to meet the performance objectives in the contract, the department may suspend or terminate the contract.

AUTHORITY NOTE: Promulgated in accordance with Act 507 of the 2012 Regular Session of the Louisiana Legislature.

HISTORICAL NOTE: Promulgated by the Department of Economic Development, Office of Business Development, LR 38:

§4311. Severability

A. If any Section or provision of this Chapter is held invalid, such invalidity shall not affect other provisions of this Chapter. Any provision of this Chapter that is in conflict with the statutory provisions of this program or any other statute will be invalid and will be severable.

AUTHORITY NOTE: Promulgated in accordance with Act 507 of the 2012 Regular Session of the Louisiana Legislature.

HISTORICAL NOTE: Promulgated by the Department of Economic Development, Office of Business Development, LR 38:

Family Impact Statement

The proposed Rule changes have no impact on family formation, stability or autonomy, as described in R.S. 49.972.

Public Comments

Interested persons may submit written comments to Danielle Clapinski, Louisiana Department of Economic Development, P.O. Box 94185, Baton Rouge, LA 70804-9185; or physically delivered to Capitol Annex Building, Office of the Secretary, Second Floor, 1051 North Third Street, Baton Rouge, LA, 70802. Comments may also be sent by fax to (225) 342-9448, or by email to danielle.clapinski@la.gov. All comments must be received no later than 5 p.m., on September 25, 2012.

Public Hearing

A public hearing to receive comments on the Notice of Intent will be held on September 26, 2012 at 10 a.m. at the Department of Economic Development, 1051 North Third Street, Baton Rouge, LA 70802.

Anne G. Villa
Undersecretary

FISCAL AND ECONOMIC IMPACT STATEMENT FOR ADMINISTRATIVE RULES
RULE TITLE: Competitive Projects Payroll Incentive Program

I. ESTIMATED IMPLEMENTATION COSTS (SAVINGS) TO STATE OR LOCAL GOVERNMENT UNITS (Summary)

There will be no incremental costs or savings to state or local governmental units due to the implementation of these rules. The Department of Economic Development (LED) intends to administer the program with existing personnel. However, as business participation accumulates in the program, a growing number of firms will have annual certifications being processed. Meaningful compliance enforcement should eventually require additional resources in LED.

II. ESTIMATED EFFECT ON REVENUE COLLECTIONS OF STATE OR LOCAL GOVERNMENTAL UNITS (Summary)

Act 507 of the 2012 legislative session creates the Competitive Projects Payroll Incentive Program which is essentially an expansion of the existing Quality Jobs Program. This proposed rule targets manufacturing of various types of durable goods, pharmaceuticals, conversion of natural gas to various fuels, data storage & services, and other activities recommended by LED and approved by Joint Legislative Committee on the Budget (JLCB). These selected businesses can receive a payroll subsidy up to 15% (plus other program benefits) rather than the 6% maximum of the Quality Jobs program. Based on utilization assumptions presented by LED, resulting state expenditures are estimated at $1 million in FY14, $2m FY15, $3 FY16, and $5m in FY17, though exact amounts are not certain. The program cannot be implemented until the economic impact methodology is verified.

III. ESTIMATED COSTS AND/OR ECONOMIC BENEFITS TO DIRECTLY AFFECTED PERSONS OR NONGOVERNMENTAL GROUPS (Summary)

The income of businesses participating in the program will increase by the amount of benefits received.

IV. ESTIMATED EFFECT ON COMPETITION AND EMPLOYMENT (Summary)

Companies receiving benefits under this program will gain competitively over companies that do not receive the program's benefits. While employment may increase in participating businesses, employment may be lessened in other competing businesses that do not participate in the program.

Anne G. Villa	Gregory Albrecht
Undersecretary	Chief Economist
1208#084	Legislative Fiscal Office

NOTICE OF INTENT

Department of Economic Development
Office of Business Development

Corporate Headquarters Relocation Program
(LAC 13:I.Chapter 45)

The Department of Economic Development, Office of Business Development, as authorized by and pursuant to the provisions of the Administrative Procedure Act, R.S. 49:950 et seq., hereby enacts Sections 4501 through 4509 for the

administration of the newly created Corporate Headquarters Relocation Program as LAC 13:I.Chapter 45.

Title 13
ECONOMIC DEVELOPMENT
Part I. Financial Incentive Programs
Chapter 45. Corporate Headquarters Relocation Program

§4501. General

A. The Corporate Headquarters Relocation Program (the "program") provides a rebate equal to 25 percent of a participating company's relocation costs when they relocate or expand their headquarters within Louisiana. The secretary ("secretary") of the Louisiana Department Economic Development ("LED") may invite businesses who meet the eligibility requirements to participate in the program.

AUTHORITY NOTE: Promulgated in accordance with Act 503 of the 2012 Regular Session of the Louisiana Legislature.

HISTORICAL NOTE: Promulgated by the Department of Economic Development, Office of Business Development, LR 38:

§4503. Eligibility Requirements; Invitation to Participate; Application

A. The secretary may invite a business to participate in the program, upon determining the business meets all of the following criteria:

1. the business is relocating a headquarters to Louisiana or is expanding headquarters in Louisiana;

2. the secretary determines that participation in the program will be a significant factor in a highly competitive site selection situation to encourage the business to relocate or expand the headquarters in Louisiana;

3. the secretary determines that securing the project will result in a significant positive economic benefit to the state; and

4. relocation or expansion of the headquarters will create at minimum of 25 headquarters jobs.

B. A business engaged in the gaming or gambling shall not be eligible for participation in the program.

C. At the invitation of the secretary, a business may apply for participation in the program by submitting certified statements and substantiating documents as required by LED.

AUTHORITY NOTE: Promulgated in accordance with Act 503 of the 2012 Regular Session of the Louisiana Legislature.

HISTORICAL NOTE: Promulgated by the Department of Economic Development, Office of Business Development, LR 38:

§4505. Contract Approval

A. Contract. The secretary shall determine the terms and conditions of the contract, including but not limited to, scope of the project, performance obligations, determination of qualifying relocation costs, and the maximum amount of qualifying relocation costs eligible for the rebate.

B. Approval

1. The secretary may request approval of the contract by the Joint Legislative Committee on the Budget upon determining the company meets the eligibility requirements of the program.

2. The Joint Legislative Committee on the Budget may approve the contract for the business' participation in the program.

AUTHORITY NOTE: Promulgated in accordance with Act 503 of the 2012 Regular Session of the Louisiana Legislature.

HISTORICAL NOTE: Promulgated by the Department of Economic Development, Office of Business Development, LR 38:

§4507. Certification of Qualifying Relocation Costs and Rebate Payment

A. The qualified business must provide LED with a cost report detailing all relocation costs upon completion of the relocation or expansion. LED will review the cost report and certify a dollar value of relocation expenditures eligible for the rebate. LED may require an audit of the relocation costs at the expense of the qualified business.

B. The rebate shall be claimed by the business in equal installments over a five year period of time.

1. No payment of a rebate shall be made in the same fiscal year in which the contract is approved by the Joint Legislative Committee on the Budget.

2. The business shall claim the rebate on a form prescribed by the Secretary of the Louisiana Department of Revenue.

3. A request for rebate may not be made more than 30 days prior to the business's right to receive the rebate.

AUTHORITY NOTE: Promulgated in accordance with Act 503 of the 2012 Regular Session of the Louisiana Legislature.

HISTORICAL NOTE: Promulgated by the Department of Economic Development, Office of Business Development, LR 38:

§4509. Severability

A. If any Section or provision of this Chapter is held invalid, such invalidity shall not affect other provisions of this Chapter. Any provision of this Chapter that is in conflict with the statutory provisions for this program or any other statute will be invalid and will be severable.

AUTHORITY NOTE: Promulgated in accordance with Act 503 of the 2012 Regular Session of the Louisiana Legislature.

HISTORICAL NOTE: Promulgated by the Department of Economic Development, Office of Business Development, LR 38:

Family Impact Statement

The proposed Rule changes have no impact on family formation, stability or autonomy, as described in R.S. 49.972.

Public Comments

Interested persons may submit written comments to Danielle Clapinski, Louisiana Department of Economic Development, P.O. Box 94185, Baton Rouge, LA 70804-9185; or physically delivered to Capitol Annex Building, Office of the Secretary, Second Floor, 1051 North Third Street, Baton Rouge, LA, 70802. Comments may also be sent by fax to (225) 342-9448, or by email to danielle.clapinski@la.gov. All comments must be received no later than 5 p.m., on September 24, 2012.

Public Hearing

A public hearing to receive comments on the Notice of Intent will be held on September 24, 2012 at 10 a.m. at the Department of Economic Development, 1051 North Third Street, Baton Rouge, LA 70802.

Anne G. Villa
UnderSecretary

FISCAL AND ECONOMIC IMPACT STATEMENT FOR ADMINISTRATIVE RULES
RULE TITLE: Corporate Headquarters Relocation Program

I. ESTIMATED IMPLEMENTATION COSTS (SAVINGS) TO STATE OR LOCAL GOVERNMENT UNITS (Summary)

There will be no incremental costs or savings to state or local governmental units due to the implementation of these rules. The Department of Economic Development (LED) intends to administer the program with existing personnel. However, as business participation accumulates in the program, a growing number of firms will have annual certifications being processed. Meaningful compliance enforcement should eventually require additional resources in LED.

II. ESTIMATED EFFECT ON REVENUE COLLECTIONS OF STATE OR LOCAL GOVERNMENTAL UNITS (Summary)

Act 503 of the 2012 legislative session creates the Corporate Headquarters Relocation Program which authorizes a rebate for certain costs related to the relocation of certain corporate headquarter projects. Eligible costs include capital expenditures for a facility and equipment, leasing costs, and personnel relocation costs. Firms are invited to participate in the program at the discretion of the Department of Economic Development (LED), but must have at least 25 jobs associated with the project paying the lower of $60,000 per year or 200% of the location parish annual average wage. The cost of implementing the program is estimated using a numerical exercise based on a set of assumptions regarding program participation, associated direct jobs and payroll, and qualifying facilities, operations, and personnel relocation costs. Resulting state expenditures are estimated to be $1 million in FY14, $3m FY15, $4 FY16, and $5m in FY17, though exact amounts are not certain. The program cannot be implemented until the economic impact methodology is verified.

III. ESTIMATED COSTS AND/OR ECONOMIC BENEFITS TO DIRECTLY AFFECTED PERSONS OR NONGOVERNMENTAL GROUPS (Summary)

The income of businesses participating in the program will increase by the amount of benefits received.

IV. ESTIMATED EFFECT ON COMPETITION AND EMPLOYMENT (Summary)

Companies receiving benefits under this program will gain competitively over companies that do not receive the program's benefits. While employment may increase in participating businesses, employment may be lessened in other competing businesses that do not participate in the program.

Anne G. Villa	Gregory Albrecht
Undersecretary	Chief Economist
1208#083	Legislative Fiscal Office

NOTICE OF INTENT

Department of Economic Development
Office of Business Development

Corporate Tax Apportionment Program
(LAC 13:I.Chapter 41)

The Department of Economic Development, Office of Business Development, as authorized by and pursuant to the provisions of the Administrative Procedure Act, R.S. 49:950 et seq., hereby enacts Sections 4101 through 4111 for the administration of the newly created Corporate Tax Apportionment Program as LAC 13:I.Chapter 41.

Title 13
ECONOMIC DEVELOPMENT
Part I. Financial Incentive Programs
Chapter 41. Corporate Tax Apportionment Program

§4101. General

A. The Corporate Tax Apportionment Program (the "program") extends the single sales factor computation for corporate income and franchise tax purposes utilized by manufacturers and merchandisers to other qualified business sectors. The secretary ("secretary") of the Louisiana Department Economic Development ("LED") may invite businesses who meet the eligibility requirements to participate in the program.

AUTHORITY NOTE: Promulgated in accordance with R.S. 51:4401.

HISTORICAL NOTE: Promulgated by the Department of Economic Development, Office of Business Development, LR 38:

§4103. Eligibility Requirements; Invitation to Participate; Application

A. The secretary may invite a business to participate in the program, upon determining the business meets all of the following criteria:

1. at least 50 percent of the total annual sales of the business from its Louisiana site or sites is to out-of-state customers or buyers, or to in-state customers or buyers who resell the product or service to an out-of-state customer or buyer for ultimate use, or to the federal government, or any combination thereof;

2. the activities of the Louisiana site or sites include at least one of the following:

a. corporate headquarters;
b. logistics;
c. warehousing;
d. data center;
e. clean technology
f. destination health care;
g. research and development;
h. renewable energy;
i. digital media and software development; or
j. any other business sector targeted by the secretary as a focus of the department's economic development efforts;

3. except when the business will provide at least 25 new headquarters jobs or shared service center jobs, the business is not primarily engaged in any of the following sectors:

a. retail sales;
b. real estate;
c. professional services;
d. natural resource extraction or exploration;
e. financial services; or
f. venture capital funds;

4. the business is not engaged in gaming or gambling.

B. At the invitation of the secretary, a business may apply for participation in the program by submitting certified statements and substantiating documents as required by LED.

AUTHORITY NOTE: Promulgated in accordance with R.S. 51:4401.

HISTORICAL NOTE: Promulgated by the Department of Economic Development, Office of Business Development, LR 38:

§4105. Contract Approval

A. Contract. The secretary shall determine the terms and conditions of the contract, including performance obligations.

B. Approval

1. The secretary may request approval of the contract by the Joint Legislative Committee on the Budget upon determining that:

a. the business meets all eligibility requirements;

b. participation in the program is needed in a highly competitive site selection situation to encourage the business to locate the project in the state; and

c. securing the project will result in significant positive economic benefit to the state.

3. The Joint Legislative Committee on the Budget may approve the contract for the business' participation in the program for an initial term of up to 20 years, renewable at the discretion of the secretary for up to an additional 20 years.

4. Upon approval of the contract, LED shall submit a copy of the contract to the Louisiana Department of Revenue.

AUTHORITY NOTE: Promulgated in accordance with R.S. 51:4401.

HISTORICAL NOTE: Promulgated by the Department of Economic Development, Office of Business Development, LR 38:

§4107. Contract Renewal

A. Upon application by a qualified business, and LED's determination that the business continues to meet eligibility requirements and contract performance obligations, the secretary may renew the contract for an additional period of up to 20 years. LED shall submit a copy of the renewal to the Louisiana Department of Revenue.

AUTHORITY NOTE: Promulgated in accordance with R.S. 51:4401.

HISTORICAL NOTE: Promulgated by the Department of Economic Development, Office of Business Development, LR 38:

§4109. Annual Certification of Eligibility

A. The qualified business must submit certification (signed by a key employee of the business) that it continues to meet all eligibility requirements of the program as well as all performance obligations of the contract by September 1 of each year unless the contract designates another reporting deadline. A company's failure to submit the annual certification of eligibility by the deadline provided for in this section shall result in the forfeiture of benefits for the previous tax year and the secretary, in his discretion, may terminate the contract. LED may require an audit of any annual certification at the expense of the qualified business.

B. The qualified business may not file its Louisiana corporate income and franchise tax return utilizing the single sales factor for apportionment purposes until the annual certification of eligibility has been submitted to and verified by LED. Upon verification, LED shall notify the Louisiana Department of Revenue that the business remains eligible to use the single sales factor for apportionment purposes on its Louisiana corporate income and franchise tax return.

C. If a business fails to maintain the eligibility requirements for participation in the program or fails to meet the performance objectives in the contract, the department may suspend or terminate the contract. Upon suspension or termination of the contract, department will notify the Louisiana Department of Revenue that the business is not qualified to utilize the single sales factor for apportionment purposes for the tax year or years in question.

AUTHORITY NOTE: Promulgated in accordance with R.S. 51:4401.

HISTORICAL NOTE: Promulgated by the Department of Economic Development, Office of Business Development, LR 38:

§4111. Severability

A. If any Section or provision of this Chapter is held invalid, such invalidity shall not affect other provisions of this Chapter. Any provision of this Chapter that is in conflict with R.S. 51:4401 or any other statute will be invalid and will be severable.

AUTHORITY NOTE: Promulgated in accordance with R.S. 51:2451-2462 et seq.

HISTORICAL NOTE: Promulgated by the Department of Economic Development, Office of Business Development, LR 38:

Family Impact Statement

The proposed Rule changes have no impact on family formation, stability or autonomy, as described in R.S. 49.972.

Public Comments

Interested persons may submit written comments to Danielle Clapinski, Louisiana Department of Economic Development, P.O. Box 94185, Baton Rouge, LA 70804-9185; or physically delivered to Capitol Annex Building, Office of the Secretary, Second Floor, 1051 North Third Street, Baton Rouge, LA, 70802. Comments may also be sent by fax to (225) 342-9448, or by email to danielle.clapinski@la.gov. All comments must be received no later than 5 p.m., on September 24, 2012.

Public Hearing

A public hearing to receive comments on the Notice of Intent will be held on September 24, 2012 at 10 a.m. at the Department of Economic Development, 1051 North Third Street, Baton Rouge, LA 70802.

Anne G. Villa
Undersecretary

FISCAL AND ECONOMIC IMPACT STATEMENT FOR ADMINISTRATIVE RULES
RULE TITLE: Corporate Tax Apportionment Program

I. ESTIMATED IMPLEMENTATION COSTS (SAVINGS) TO STATE OR LOCAL GOVERNMENT UNITS (Summary)

There will be no incremental costs or savings to state or local governmental units due to the implementation of these rules. The Department of Economic Development (LED) intends to administer the program with existing personnel. However, as business participation accumulates in the program, a growing number of firms will have a different tax base calculation than they would otherwise have, and likely different than other firms in the same industries. Meaningful compliance enforcement should eventually require additional resources in the Revenue Department, if not LED.

II. ESTIMATED EFFECT ON REVENUE COLLECTIONS OF STATE OR LOCAL GOVERNMENTAL UNITS (Summary)

Act 415 of the 2012 legislative session creates the Corporate Tax Apportionment Program which allows LED, with the approval of the Joint Legislative Committee on the Budget, to grant to firms the use of a single sales factor to determine the share of their net income and taxable capital that will be apportioned to Louisiana for tax purposes. Eligible businesses include headquarters, logistics, warehousing, data centers, clean technology, destination health care, R&D,

renewable energy, digital media and software development, and any other business sector upon which LED wants to focus. LED presents a numerical exercise to illustrate their implementation of the program. Basic calculating assumptions are that the program ramps up with 1 to 2 participant firms in FY14, 2 to 3 more firms in FY15, and 2 to 4 firms more in each of FY16 and FY17. Each model firm is estimated to have reduced tax liability of $500,000 per year by receiving single sales factor apportionment rather than traditional three-factor apportionment. The exercise results in annual state tax revenue losses of $1 million in FY14, $2m FY15, $4 FY16, and $5m in FY17, though exact amounts are not certain. The program cannot be implemented until the economic impact methodology is verified.

III. ESTIMATED COSTS AND/OR ECONOMIC BENEFITS TO DIRECTLY AFFECTED PERSONS OR NONGOVERNMENTAL GROUPS (Summary)

The income of businesses participating in the program will increase by the amount of benefits received.

IV. ESTIMATED EFFECT ON COMPETITION AND EMPLOYMENT (Summary)

Companies receiving benefits under this program will gain competitively over companies that do not receive the program's benefits. While employment may increase in participating businesses, employment may be lessened in other competing businesses that do not participate in the program.

Anne G. Villa
Undersecretary
1208#082

Gregory Albrecht
Chief Economist
Legislative Fiscal Office

NOTICE OF INTENT

Department of Economic Development
Office of Business Development

Quality Jobs Program (LAC 13:I.1129)

The Department of Economic Development, Office of Business Development, as authorized by and pursuant to the provisions of the Administrative Procedure Act, R.S. 49:950 et seq., hereby amends and deletes Section 1129 of the Quality Jobs Program.

The purpose of the promulgation of this Rule is to address an error in the application deadline listed. Whereas R.S. 51:2461 specifies January 1, 2018 as an application deadline, program rules have failed to incorporated recent statutory extensions and continue to list in error January 1, 2012 as the application deadline.

Title 13
ECONOMIC DEVELOPMENT
Part I. Financial Incentive Programs
Chapter 11. Quality Jobs Program
§1129. Termination of Program

Repealed.

AUTHORITY NOTE: Promulgated in accordance with R.S. 51:2451-2462 et seq.

HISTORICAL NOTE: Promulgated by the Department of Economic Development, Office of Business Development, Business Resources Division, LR 29:2312 (November 2003), amended by the Office of Business Development, LR 37:2595 (September 2011), repealed by the Department of Economic Development, Office of Business Development, LR 38:

Family Impact Statement

The proposed Rule changes have no impact on family formation, stability or autonomy, as described in R.S. 49.972.

Public Comments

Interested persons may submit written comments to Danielle Clapinski, Louisiana Department of Economic Development, P.O. Box 94185, Baton Rouge, LA 70804-9185; or physically delivered to Capitol Annex Building, Office of the Secretary, Second Floor, 1051 North Third Street, Baton Rouge, LA, 70802. Comments may also be sent by fax to (225) 342-9448, or by email to danielle.clapinski@la.gov. All comments must be received no later than 5 p.m., on September 24, 2012.

Public Hearing

A public hearing to receive comments on the Notice of Intent will be held on September 24, 2012 at 11 a.m. at the Department of Economic Development, 1051 North Third Street, Baton Rouge, LA 70802.

Anne G. Villa
Undersecretary

FISCAL AND ECONOMIC IMPACT STATEMENT FOR ADMINISTRATIVE RULES
RULE TITLE: Quality Jobs Program

I. ESTIMATED IMPLEMENTATION COSTS (SAVINGS) TO STATE OR LOCAL GOVERNMENT UNITS (Summary)

There will be no incremental costs or savings to state or local governmental units due to the implementation of these rules. The Department of Economic Development intends to administer the program with existing personnel.

II. ESTIMATED EFFECT ON REVENUE COLLECTIONS OF STATE OR LOCAL GOVERNMENTAL UNITS (Summary)

Act 410 of the 2011 legislative session extended the application sunset date of the program to January 1, 2018. The proposed rule eliminates all references to the expiration date. Virtually all projects currently eligible for Quality Jobs will also be eligible for the Enterprise Zone program and are anticipated to apply for Enterprise Zone benefits if the Quality Jobs program expires. Therefore, the fiscal impact of extending the Quality Jobs program is the difference in the calculation of the Enterprise Zone program jobs tax credit and the Quality Jobs program payroll rebates since the sales tax rebate and investment credit are identical. Based on this, state revenue would decrease by about $500,000 in FY 13, $3,000,000 in FY 14, $8,000,000 in FY 15 and continue to increase in the foreseeable future as more projects are added. In practice, costs in this program's extensions should begin slowly as projects complete their expansions, but a 10 year annual payment program inherently means that annual revenue losses accumulate from year to year as additional projects and jobs enter the program each year.

III. ESTIMATED COSTS AND/OR ECONOMIC BENEFITS TO DIRECTLY AFFECTED PERSONS OR NONGOVERNMENTAL GROUPS (Summary)

The income of businesses participating in the program will increase by the amount of benefits received.

IV. ESTIMATED EFFECT ON COMPETITION AND EMPLOYMENT (Summary)

Companies receiving benefits under this program will gain competitively over companies that do not receive the program's benefits. While employment may increase in participating businesses, employment may be lessened in other competing businesses that do not participate in the program.

Anne G. Villa
Undersecretary
1208#085

Gregory Albrecht
Chief Economist
Legislative Fiscal Office

NOTICE OF INTENT

Department of Economic Development
Office of the Secretary

Small Entrepreneurship Certification Program
(Hudson Initiative) (LAC 19:VIII.Chapters 3)

In accordance with the provisions of the Administrative Procedure Act, R.S. 49:950 et seq., and in accordance with R.S. 39:2006 and R.S. 51:931, notice is hereby given that the Department of Economic Development has initiated rulemaking procedures to make amendments to the Rules for the Small Entrepreneurship Certification Program (Hudson Initiative) to bring the rules into compliance with current statutory provisions and administrative practices.

Title 19
CORPORATIONS AND BUSINESSES
Part VIII. Small Entrepreneurship (Hudson Initiative) Certification Program
Subpart 1. Certification Program
Chapter 3. Certification

§301. Eligibility Requirements for Certification

A. A small entrepreneurship (SE) is a firm independently owned and operated; not dominant in its field of operations, which shall be determined by consideration of the business' number of employees, volume of business, financial resources, competitive status, and ownership or control of materials, processes, patents, license agreements, facilities, and sales territory; is owned by and has officers who are citizens or legal residents of the United States, all of whom are domiciled in Louisiana, and who maintain the principal business office in Louisiana; and together with its affiliate entities, has fewer than 50 full-time employees with average annual gross receipts not exceeding $10,000,000 per year for construction operations and $5,000,000 per year for non-construction operations, for each of the previous three tax years. Eligibility requirements include meeting all of the criteria specified in R.S. 39:2006(A), as it may be amended from time to time. In order to participate and continue to participate in the program, an individual or firm must meet and continue to meet all such eligibility requirements or criteria.

B - D …

AUTHORITY NOTE: Promulgated in accordance with R.S. 39: 2006 and R.S. 51:931.

HISTORICAL NOTE: Promulgated by the Department of Economic Development, Office of the Secretary, LR 32:230 (February 2006), amended LR 38:

§307. Duration of Certification; Graduation through Growth

A. The amount of time that a firm may be granted certification by the SE (HI) Certification Program is unlimited until the firm graduates by growing to exceed the eligibility requirements for certification, or is terminated from the program by LED.

B. Retention of the firm in the program depends upon the passing of time, the firm's growth and progress toward successfulness and the attainment of its business goals, its compliance with all reporting requirements, willingness and ability to cooperate with and follow through on recommendations of the SE(HI) Certification Program designee or staff.

AUTHORITY NOTE: Promulgated in accordance with R.S. 39:2006 and R.S. 51:931.

HISTORICAL NOTE: Promulgated by the Department of Economic Development, Office of the Secretary, LR 32:231 (February 2006), amended LR 38:

§309. Verification of Eligibility; Annual Reports; Evaluation

A. …

B. Annual Reports. By letter, or on forms which may be identified or prescribed by the SE(HI) Certification Program, or its designee or staff, certified businesses shall continue to report annually and at times specified by the SE(HI) Certification Program, or its designee or staff, their financial position and attainment of the business' performance goals. Failure to report or failure to report on a timely basis, as required annually or as otherwise requested by the SE(HI) Certification Program, or its designee or staff, shall result in the business' termination of its SE certification and from the program.

C - D. …

AUTHORITY NOTE: Promulgated in accordance with R.S. 39:2006 and R.S. 51:931.

HISTORICAL NOTE: Promulgated by the Department of Economic Development, Office of the Secretary, LR 32:231 (February 2006), amended LR 38:

Family Impact Statement

Family Impact Statement: It is anticipated that the proposed Rule amendment will have no significant effect on the:

1. stability of the family;
2. authority and rights of parents regarding the education and supervision of their children;
3. functioning of the family;
4. family earnings and family budget;
5. behavior and personal responsibility of children;
6. ability of the family or a local government to perform the function as contained in the proposed Rule.

Small Business Statement

It is anticipated that the proposed Rule will not have a significant adverse impact on small businesses as defined in the Regulatory Flexibility Act. The agency, consistent with health, safety, environmental and economic factors has considered and, where possible, utilized regulatory methods in drafting the proposed rule to accomplish the objectives of applicable statutes while minimizing any anticipated adverse impact on small businesses.

Public Comments

Interested persons should submit written comments on the proposed Rules to John Mathews through the close of business on September 26, 2012 at P.O. Box 94185, Baton Rouge, LA 70804-9185 or via email to John.Mathews@la.gov.

Public Hearing

A meeting for the purpose of receiving the presentation of oral comments will be held at 10 am on September 27, 2012 at the Department of Economic Development, 1301 N. Third St., Baton Rouge, LA.

Jason El Koubi
Assistant Secretary

FISCAL AND ECONOMIC IMPACT STATEMENT FOR ADMINISTRATIVE RULES
RULE TITLE: Small Entrepreneurship Certification Program (Hudson Initiative)

I. ESTIMATED IMPLEMENTATION COSTS (SAVINGS) TO STATE OR LOCAL GOVERNMENT UNITS (Summary)

There will be no incremental costs or savings to state or local governmental units due to the implementation of these rules. Additional administrative costs, if any, are already incorporated into the existing budget.

II. ESTIMATED EFFECT ON REVENUE COLLECTIONS OF STATE OR LOCAL GOVERNMENTAL UNITS (Summary)

The proposed rules incorporate Act 498 of the 2012 Regular Session, which increases the maximum gross receipts thresholds for small businesses applying to the Hudson Initiative program, from five to ten million dollars per year for construction operations and from three to five million dollars per year for non-construction operations.

The proposed rule also provides for mandatory termination from the program upon failure to meet annual filing requirements. This measure will serve to provide greater accuracy and tracking of companies approved for the Hudson Initiative program. These changes are not expected to have a fiscal impact to the state.

III. ESTIMATED COSTS AND/OR ECONOMIC BENEFITS TO DIRECTLY AFFECTED PERSONS OR NONGOVERNMENTAL GROUPS (Summary)

Annual reports have been collected as current practice so no additional costs are anticipated as a result of this change. If a company is terminated for failure to timely file annual reports, they may not maximize opportunities available under state procurement and public contracts. However, a company may re-apply with no additional cost, beyond nominal administrative cost to compile and re-submit required information.

IV. ESTIMATED EFFECT ON COMPETITION AND EMPLOYMENT (Summary)

Companies receiving benefits under this program will gain competitively over companies that do not receive the program's benefits. While employment may increase in participating businesses, employment may be lessened in other competing businesses that do not participate in the program.

Jason El Koubi	Gregory Albrecht
Assistant Secretary	Chief Economist
1208#086	Legislative Fiscal Office

NOTICE OF INTENT

Department of Economic Developement
Office of the Secretary

The Veteran Initiative—Certification
(LAC 19:IX.Chapter 3)

In accordance with the provisions of the Administrative Procedure Act, R.S. 49:950 et seq., and in accordance with R.S. 39:2006 and R.S. 39:2171, notice is hereby given that the Department of Economic Development has initiated rulemaking procedures to make amendments to the Rules for the Small Entrepreneurship Certification Program (Veterans Initiative) to bring the rules into compliance with current statutory provisions and administrative practices.

Title 19
CORPORATIONS AND BUSINESSES
Part IX. The Veteran Initiative
Chapter 3. Certification

§301. Eligibility Requirements for Certification

A. Eligibility. An applicant for certification must meet two sets of requirements:

1. an applicant must establish that it is a "service-connected veteran-owned small entrepreneurship" (SDVSE) or a "veteran-owned small entrepreneurship" (VSE), by providing appropriate documentation from the United States Department of Veterans Affairs or the Louisiana Department of Veterans Affairs; and

2. shall meet all the requirements for a Small Entrepreneurship (SE):

a. independently owned and operated;

b. not dominant in its field of operation, which shall be determined by consideration of the business's number of employees, volume of business, financial resources, competitive status, and ownership or control of materials, processes, patents, license agreements, facilities, and sales territory; and

c. together with any of its affiliates, has fewer than 50 full-time employees with average annual gross receipts not exceeding $10,000,000 per year for construction operations and $5,000,000 per year for non-construction operations, for each of the previous three tax years.

B. …

AUTHORITY NOTE: Promulgated in accordance with R.S. R.S. 39:2006, R.S. 39:2171 et seq. and R.S. 51:931.

HISTORICAL NOTE: Promulgated by the Department of Economic Development, Office of the Secretary, LR 36:472 (March 2010), amended LR 38:

§307. Duration of Certification; Graduation through Growth

A. The amount of time that a firm may be granted certification by the SE (VI) Certification Program is unlimited until the firm graduates by growing to exceed the eligibility requirements for certification or is terminated from the program by LED.

B. Retention of the firm in the program depends upon the passing of time, the firm's growth and progress toward successfulness and the attainment of its business goals, its compliance with all reporting requirements, willingness and ability to cooperate with and follow through on recommendations of the SE (VI) Certification Program designee or staff.

AUTHORITY NOTE: Promulgated in accordance with R.S. R.S. 39:2006, R.S. 39:2171 et seq. and R.S. 51:931.

HISTORICAL NOTE: Promulgated by the Department of Economic Development, Office of the Secretary, LR 36:473 (March 2010), amended LR 38:

§309. Verification of Eligibility; Annual Reports; Evaluation

A. …

B. Annual Reports. By letter, or on forms which may be identified or prescribed by the SE (VI) Certification Program, or its designee or staff, certified businesses shall continue to report annually and at times specified by the SE (VI) Certification Program, or its designee or staff, their

financial position and attainment of the business' performance goals. Failure to report or failure to report on a timely basis, as required annually or as otherwise requested by the SE (HV) Certification Program, or its designee or staff, shall result in the business' termination of its SE certification and from the program.

C. - D. …

AUTHORITY NOTE: Promulgated in accordance with R.S. R.S. 39:2006, R.S. 39:2171 et seq. and R.S. 51:931.

HISTORICAL NOTE: Promulgated by the Department of Economic Development, Office of the Secretary, LR 36:473 (March 2010), amended LR 38:

Family Impact Statement

Family Impact Statement: It is anticipated that the proposed Rule amendment will have no significant effect on the:

1. stability of the family;
2. authority and rights of parents regarding the education and supervision of their children;
3. functioning of the family;
4. family earnings and family budget;
5. behavior and personal responsibility of children;
6. ability of the family or a local government to perform the function as contained in the proposed Rule.

Small Business Statement

It is anticipated that the proposed Rule will not have a significant adverse impact on small businesses as defined in the Regulatory Flexibility Act. The agency, consistent with health, safety, environmental and economic factors has considered and, where possible, utilized regulatory methods in drafting the proposed Rule to accomplish the objectives of applicable statutes while minimizing any anticipated adverse impact on small businesses.

Public Comments

Interested persons should submit written comments on the proposed Rules to John Mathews through the close of business on September 26, 2012 at P.O. Box 94185, Baton Rouge, LA 70804-9185 or via email to John.Mathews@la.gov.

Public Hearing

A meeting for the purpose of receiving the presentation of oral comments will be held at 10 am on September 27, 2012 at the Department of Economic Development, 1301 N. Third St., Baton Rouge, LA.

Jason El Koubi
Assistant Secretary

FISCAL AND ECONOMIC IMPACT STATEMENT FOR ADMINISTRATIVE RULES
RULE TITLE: The Veteran Initiative—Certification

I. ESTIMATED IMPLEMENTATION COSTS (SAVINGS) TO STATE OR LOCAL GOVERNMENT UNITS (Summary)

There will be no incremental costs or savings to state or local governmental units due to the implementation of these rules. Additional administrative costs, if any, are already incorporated into the existing budget.

II. ESTIMATED EFFECT ON REVENUE COLLECTIONS OF STATE OR LOCAL GOVERNMENTAL UNITS (Summary)

The proposed rules incorporate Act 498 of the 2012 Regular Session, which increases the maximum gross receipts thresholds for small businesses applying to Veterans Initiative program, from five to ten million dollars per year for construction operations and from three to five million dollars per year for non-construction operations.

The proposed rule also provides for mandatory termination from the program upon failure to meet annual filing requirements. This measure will serve to provide greater accuracy and tracking of "service-connected veteran-owned small entrepreneurship" (SDVSE) or a "veteran-owned small entrepreneurship" (VSE) companies approved for the Veterans Initiative program. These changes are not expected to have a fiscal impact to the state.

III. ESTIMATED COSTS AND/OR ECONOMIC BENEFITS TO DIRECTLY AFFECTED PERSONS OR NONGOVERNMENTAL GROUPS (Summary)

Annual reports have been collected as current practice so no additional costs are anticipated as a result of this change. If a company is terminated for failure to timely file annual reports, they may not maximize opportunities available under state procurement and public contracts. However, a company may re-apply with no additional cost, beyond nominal administrative cost to compile and re-submit required information.

IV. ESTIMATED EFFECT ON COMPETITION AND EMPLOYMENT (Summary)

Companies receiving benefits under this program will gain competitively over companies that do not receive the program's benefits. While employment may increase in participating businesses, employment may be lessened in other competing businesses that do not participate in the program.

Jason El Koubi	Gregory Albrecht
Assistant Secretary	Chief Economist
1208#087	Legislative Fiscal Office

NOTICE OF INTENT

Board of Elementary and Secondary Education

Bulletin 111—The Louisiana School,
District and State Accountability System
(LAC 28:LXXXIII.Chapters 3-51)

In accordance with R.S. 49:950 et seq., the Administrative Procedure Act, notice is hereby given that the Board of Elementary and Secondary Education approved for advertisement revisions to *Bulletin 111—The Louisiana School, District and State Accountability System:* §301. School Performance Score Component, §302. 9-12 Transition from 2010 to 2012, §303. Calculating the SPS Component, §307. Incentive Points,§405. Calculating a K-8 Assessment Index,§409. Calculating a 9-12 Assessment Index, §411. Attendance Index Calculations, §413. Dropout Index Calculations, §515. State Assessments and Accountability, §517. Inclusion of Students, §519. Inclusion of Schools, §521. Pairing/Sharing of Schools with Insufficient Test Data, §523. Growth Targets, §601. Defining a Graduation Index, §603. Determining a Cohort for a Graduation, §611. Documenting a Graduation Index, §613. Calculating a Graduation Index, §703. Inclusion of Students in the Subgroup Component, §707. Safe Harbor, §708. Using a Graduation Rate in the Subgroup Component, §709. Failing the Subgroup Component, §903. Growth Targets and Labels, §1101. Letter Grades, §1103. Honor Rolls, §1105. Turnaround Schools, §1301. Reward Eligibility, §1303. Correction of Data, §1401. Levels of Academic Assistance, §1403. Entry into Academic Assistance, §1405. Movement in Academic Assistance, §1601. Entry into Academically

Unacceptable School Status, §1603. Requirements for Academically Unacceptable Schools, §1607. Requirements for Schools Identified as Failing the Subgroup Component for Two Consecutive Years, §1609. Order of Priority for Remedies, §1901. District Level Tasks, §1903. District Support at Each Level, §2001. Pilot Program, Timeframe, and Transition, §2003. Academically Unacceptable Schools, §2005. Subgroup Component Failure Category Determinations, §2007. Requirements for Schools in Subgroup Component Failure, §2101. State Support at Each Level, §2301. Schools Requiring Reconstitution/Alternate Governance Plans, §2501. Schools Requiring Choice, §2503. Student Eligibility, §2507. School Choice Policy, §2901. State Annual Reporting, §3101. Appeals/Waivers and Data Certification Processes, §3105. General Guidelines—Parent/School-Level Requests, §3107. General Guidelines—Local Board of Education-Level Requests, §3109. Criteria for Appeal, §3111. Criteria for Waiver, §3301. Inclusion of New Schools, §3303. Reconfigured Schools, §3701. Special Consideration of Lab and Charter Schools, §3901. Assessment of Students with Disabilities, §3905. Inclusion of Alternate Assessment Results, §4001. Proficient in English, §4101. Valid Data Considerations, §4103. NRT and CRT Data, §4104. Attendance and Dropout/Exit Data, §4301. Inclusion of All Districts, §4303. Indicator 1—Summer School, §4305. Indicator 2—The Change in SPS for All Schools Relative to Growth Targets, §4307. Indicator 3—The Change in LEAP 21 First-Time Passing Rate from One Year to the Next, §4309. Indicator 4—Classes Taught by Certified Teachers, §4311. District Letter Grades, §4313. Corrective Actions, §4315. Progress Report, §4509. Assessment Index Calculations with Displaced Students for Limited Impact Schools, §4527. Disaster Considerations for the School and District Subgroup Component, §5101. Definition of a Distinguished Educator, and §5103. Role of the Distinguished Educator. The proposed policy revisions will reflect new policy as a result of the ESEA Flexibility Request that was approved for implementation by the United States Department of Education.

Title 28
EDUCATION
Part LXXXIII. Bulletin 111—The Louisiana School, District and State Accountability System
Chapter 3. School Performance Score Component
§301. School Performance Score Goal

A. A school performance score (SPS) shall be calculated for each school. This score shall range from 0.0 to 150.

B. …

C. Preliminary school performance scores shall be released in the summer for schools that receive a letter grade of F. Final accountability results shall be issued by the fall semester of each year and all accountability reports will reflect the configuration of the school as it existed the prior spring semester.

1. For K-6 schools, the school performance score will consist entirely of one index based on assessments listed in the table below.

2. For K-8 schools, the school performance score will consist of an assessment index and a dropout/credit accumulation index.

K-8 School Performance Score Indices and Weights		
LEAP, iLEAP, LAA 1 and LAA 2	Grades K-6 Grades K-8	100 percent 95 percent
Dropout/Credit Accumulation Index	Grades 7 and/or 8	5 percent

3. For schools with a grade 12, the school performance scores will include four indicators weighted equally as outlined in the table below:

High School Performance Score Indices and Weights		
End of Course Tests, LAA 1, LAA 2	Grades 9-12	25 percent
ACT*	Grade 11	25 percent
Graduation Index*	Grade 12	25 percent
Graduation Rate	Grade 12	25 percent

*When calculating a school's ACT score or graduation index score, students participating in the LAA 1 assessment shall not be included in the denominator of such calculations.

4. For schools with configurations that include grades 9 through 11, but do not have a grade 12, the school performance score will consist of the indices available.

a. For example, a school with grade configuration of grades 7-10 will receive an assessment index that includes iLEAP, LEAP, LAA 1, LAA 2, and end-of-course assessments as 95 percent of the SPS. The dropout/credit accumulation index for data from grades 7 and 8 will count as 5 percent.

b. A school with grades 9-11 will receive an SPS that includes the end-of-course and ACT assessments.

D. Bonus Points

1. The school performance score will also be affected by the bonus points earned from growth calculated for the non-proficient student subgroup (i.e., super subgroup). To be eligible for bonus points, the school must have:

a. at least 10 students in the non-proficient subgroup, as identified for subgroup membership based on prior year assessment scores; and

b. a minimum of 30 percent of the students in the non-proficient subgroup meet or exceed their expected growth, as determined by the value-added model for students in grades K-8 and as determined by the ACT series for students in grades 9-12.

2. The assessments used to determine growth in the non-proficient subgroup include, as available:

a. LEAP and iLEAP scores for schools without a grade 11;

b. EXPLORE, PLAN and ACT scores for schools with grades 9-11;

c. for schools with LEAP, iLEAP, EXPLORE, PLAN and ACT data, all tests will be used to determine bonus points.

3. Schools can earn a maximum of 10 bonus points to be added to the SPS.

a. For combination schools that include both middle and high school grades (e.g., 6-12), the bonus shall be calculated by adding the points earned from each test group together. For sums that are greater than 10, a maximum of 10 points will be awarded as bonus.

AUTHORITY NOTE: Promulgated in accordance with R.S. 17:10.1.

HISTORICAL NOTE: Promulgated by the Board of Elementary and Secondary Education, LR 29:2737 (December 2003), amended LR 31:1512 (July 2005), LR 32:1017 (June 2006), LR 32:2034, 2035 (November 2006), LR 33:424 (March 2007), LR 33:2349 (November 2007), LR 33:2593 (December 2007), LR 34:430 (March 2008), LR 35:639 (April 2009), LR 36:1987 (September 2010), LR 38:

§302. 9-12 Transition from 2010 to 2012

Repealed.

AUTHORITY NOTE: Promulgated in accordance with R.S. 17:10.1.

HISTORICAL NOTE: Promulgated by the Board of Elementary and Secondary Education, LR 36:2241 (October 2010), amended LR 37:857 (March 2011), LR 37:2118 (July 2011), repealed LR 38:

§303. Calculating the SPS Component

Repealed.

AUTHORITY NOTE: Promulgated in accordance with R.S. 17:10.1.

HISTORICAL NOTE: Promulgated by the Board of Elementary and Secondary Education, LR 29:2738 (December 2003), amended LR31:763 (April 2004), LR 32:1020 (June 2006), LR 32:2034 (November 2006), LR 36:1988 (September 2010), repealed LR 38:

§307. Incentive Points

Repealed.

AUTHORITY NOTE: Promulgated in accordance with R.S. 17:10.1.

HISTORICAL NOTE: Promulgated by the Board of Elementary and Secondary Education, LR 29:2739 (December 2003), amended LR 31:2422 (October 2005), LR 32:1021 (June 2006), LR 33:252 (February 2007), LR 36:1989 (September 2010), repealed LR 38:

Chapter 4. Assessment and Dropout/Credit Accumulation Index Calculations

§405. Calculating a K-8 Assessment Index

A. For all grades 3-8 use the values from the following table.

iLEAP and LEAP Index Points	
Label	Subject-Test Index Points
Advanced =	150
Mastery (Exceeding the Standard) =	125
Basic (Meeting the Standard) =	100
Approaching Basic (Approaching the Standard) =	0
Unsatisfactory =	0

B. Weight each subject-test index score by the corresponding value from the table below.

Unit Weights for K-8 Assessment Index				
Grade	ELA	Math	Science	Social Studies
3rd	2	2	1	1
4th	2	2	1	1
5th	2	2	1	1
6th	2	2	1	1
7th	2	2	1	1
8th	2	2	1	1

C. Sum all weighted subject-test index scores.

D. Sum all weights applied to subject-test index scores from the table above (in Subsection B).

E. Divide the sum from Subsection D by the total scores.

AUTHORITY NOTE: Promulgated in accordance with R.S. 17:10.1.

HISTORICAL NOTE: Promulgated by the Board of Elementary and Secondary Education, LR 32:1021 (June 2006), amended LR 36:1989 (September 2010), LR 38:

§409. Calculating a 9-12 Assessment Index

A. - A.1. …

2. - 3. Repealed.

B. The ACT composite score will be used in the calculation of the ACT assessment index as described in the chart below. To the extent practicable, a student's highest earned score for any ACT administration up to the end of grade 11 shall be used in the calculation.

ACT Composite	Index Pts
0-17	0
18	100
19	102.8
20	105.6
21	108.4
22	111.2
23	114
24	116.8
25	119.6
26	122.4
27	125.2
28	128
29	130.8
30	133.6
31	136.4
32	139.2
33	142
34	144.8
35	147.6
36	150.4

AUTHORITY NOTE: Promulgated in accordance with R.S. 17:10.1.

HISTORICAL NOTE: Promulgated by the Board of Elementary and Secondary Education, LR 32:1021 (June 2006), amended LR 33:252 (February 2007), LR 36:1989 (September 2010), LR 37:2118 (July 2011), repromulgated LR 37:2382 (August 2011), LR 37:3200 (November 2011), LR 38:

§411. Attendance Index Calculations

Repealed.

AUTHORITY NOTE: Promulgated in accordance with R.S. 17:10.1.

HISTORICAL NOTE: Promulgated by the Board of Elementary and Secondary Education, LR 29:2740 (December 2003), amended LR 36:1990 (September 2010), repealed LR 38:

§413. Dropout/Credit Accumulation Index Calculations

A. A dropout/credit accumulation index score for each school with a grade eight shall be calculated.

B. The following scale will be used to determine the dropout/credit accumulation index.

1. In order for students to be included in the calculations, they must;

a. have been considered full academic year during the year of last record at the middle school;

b. if earning Carnegie units, have been considered full academic year during the ninth grade year for the first ninth grade record.

2. Carnegie units earned in summer school will not be included.

3. Students who are considered dropouts based on SIS records shall be included in the calculation and earn zero points.

4. Students who are completing their third year in grade 8 shall be included in the calculation and earn zero points.

Number of Carnegie Units	Index Point Award
6 or more	150
5.5	125
5	100
4.5	75
4	50
3.5	25
3 or less	0
3rd year 8th grade student	0
Dropout	0

AUTHORITY NOTE: Promulgated in accordance with R.S. 17:10.1.

HISTORICAL NOTE: Promulgated by the Board of Elementary and Secondary Education, LR 29:2741 (December 2003), amended LR 36:1990 (September 2010), LR 38:

Chapter 5. Inclusion in Accountability

§515. State Assessments and Accountability

A. Louisiana students in grades 3-8 will participate in at least one of the following state assessments on an annual basis:

1. LEAP; or
2. iLEAP; or
3. LEAP Alternate Assessment Level 1 (LAA 1); or
4. LEAP Alternate Assessment Level 2 (LAA 2).

a. Some LAA 2 students will participate in a combination of regular assessment (LEAP, iLEAP, GEE, EOC) and LAA 2 if the IEP requires this.

b. These students can take only one test in each subject at any single test administration (e.g., LAA 2 in ELA and LEAP in mathematics, science, and social studies).

B. Louisiana students in grades 9, 10 and 11 will participate in at least one of the following state assessments on an annual basis:

1. EOC (when they are enrolled in the course for which a test is available);
2. GEE (only for repeating testers);
3. LEAP Alternate Assessment Level 1 (LAA 1); or
4. LEAP Alternate Assessment Level 2 (LAA 2);
5. EXPLORE in grade 9;
6. PLAN in grade 10;
7. ACT in grade 11.

C. All LEP students shall take the English language development assessment (ELDA) annually, as well as the appropriate state assessment for their enrolled grade.

D. EOC scores for repeaters (in any subject) shall not be included in high school SPS calculations except for middle school students who earn a score of needs improvement and repeat the course in the 9th or 10th grade.

E. Scores shall not be included in school performance score calculations for LEP students who have not been enrolled in a school in the United States for one full school year.

F. Scores earned by any student during an academic year who transferred into the LEA after October 1 of the same academic year shall not be included in the school performance score (SPS) or subgroup performance score.

AUTHORITY NOTE: Promulgated in accordance with R.S. 17:10.1.

HISTORICAL NOTE: Promulgated by the Board of Elementary and Secondary Education, LR 29:2741 (December 2003), amended LR 31:2422 (October 2005), LR 32:1022 (June 2006), LR 33:253 (February 2007), LR 36:1990 (September 2010), LR 37:2119 (July 2011), LR 38:

§517. Inclusion of Students

A. The test score of every student who is enrolled in any school in a LEA on October 1 of the academic year and who is eligible to take a test at a given school within the same LEA shall be included in that school's performance score regardless of how long that student has been enrolled in that school.

AUTHORITY NOTE: Promulgated in accordance with R.S. 17:10.1.

HISTORICAL NOTE: Promulgated by the Board of Elementary and Secondary Education, LR 29:2741 (December 2003), amended LR 31:1512 (July 2005), LR 31:2422 (October 2005), LR 31:2764 (November 2005), LR 33:2594 (December 2007), LR 38:

§519. Inclusion of Schools

A. All K-8 schools shall have a minimum of 40 testing units in any combination of LEAP, iLEAP, LAA 1, or LAA 2 assessments.

B. All 9-12 and combination schools shall have a minimum number of 40 units in any combination of graduation cohort membership and LEAP, iLEAP, LAA 1, LAA 2, or EOC assessments.

C. Each member of a cohort used to calculate a graduation index shall be counted as 4 units when determining the minimum number of units required calculating an SPS.

D. A school must have ten students in the graduation cohort to receive a cohort graduation index.

AUTHORITY NOTE: Promulgated in accordance with R.S. 17:10.1.

HISTORICAL NOTE: Promulgated by the Board of Elementary and Secondary Education, LR 29:2741 (December 2003), amended LR 31:1512 (July 2005), LR 32:1022 (June 2006), LR 34:431 (March 2008), LR 36:1991 (September 2010), LR 38:

§521. Pairing/Sharing of Schools with Insufficient Test Data

A. Any school with at least one testing grade (3-11) will receive its SPS based only on its own student data provided it meets the requirements of §519.

B. Any K-2 school with insufficient testing data will be awarded an SPS based on “shared” 3rd grade testing data from another school.

C. Any school enrolling only 12th grade students will be awarded an SPS based on “shared” data from a school or schools containing grades 9-11 that send it the majority of its students. This sharing relationship is to define the cohort that will provide the starting roster on which its graduation index will be based.

D. Any K-2, 9-12 configuration shall receive an SPS based solely on the 9-12 data.

E. A district must identify the school where each of its non-standard schools shall be "paired" in order to facilitate the proper “sharing” of data for reporting purposes, as described above. The "paired" school must be the one that receives by promotion the largest percentage of students from the non-standard school. In other words, the "paired" school must be the school into which the largest percentage

of students "feed." If two schools receive an identical percentage of students from a non-standard school, or when there is no distinct feeder pattern, the district shall select the "paired" school.

F. Requirements for the number of test/graduation index units shall be the sum of the units used to calculate the school's SPS (see §519).

G. Once the identification of "paired" schools has been made, this decision is binding for at least one accountability cycle.

H. When a paired/shared school acquires a sufficient number of testing units, the pair/share relationship will be broken, and the school will be treated as a stand-alone school.

AUTHORITY NOTE: Promulgated in accordance with R.S. 17:10.1.

HISTORICAL NOTE: Promulgated by the Board of Elementary and Secondary Education, LR 29:2741 (December 2003), amended LR 30:1445 (July 2004), LR 32:1023 (June 2006), LR 36:1991 (September 2010), LR 38:

§523. Growth Targets

Repealed.

AUTHORITY NOTE: Promulgated in accordance with R.S. 17:10.1.

HISTORICAL NOTE: Promulgated by the Board of Elementary and Secondary Education, LR 29:2742 (December 2003), amended LR 32:1023 (June 2006), repealed LR 38:

Chapter 6. Graduation Cohort, Index, and Rate

§601. Defining a Graduation Index

A. The Louisiana Department of Education (LDE) will calculate a graduation index based on a cohort of students for use in the school performance score of each school with students in grade 12.

AUTHORITY NOTE: Promulgated in accordance with R.S. 17:10.1.

HISTORICAL NOTE: Promulgated by the Board of Elementary and Secondary Education, LR 32:1024 (June 2006), amended LR 38:

§603. Determining a Cohort for a Graduation

A. - B. …

C. Students who exit Louisiana's Student Information System (SIS) system in fewer than four years for legitimate reasons shall not be included in the cohort's graduation index calculations.

1. - 3. …

a. The only acceptable documentation for transfers to other diploma awarding schools or programs is a request for student records from the qualifying school or program, or a letter from an official in the receiving school or program acknowledging the students enrollment. The documentation must be clearly dated before October 1 following the student's exit from the Louisiana Student Information System (SIS). The LDE can, during data certification and audits, require proof that the school or program is recognized as a "diploma awarding" by the state in which it is located.

C.3.b. - F.2. …

G. Students who graduate or complete high school in fewer than four years will be included in the cohort in which they started 9th grade.

H. - J. …

AUTHORITY NOTE: Promulgated in accordance with R.S. 17:10.1.

HISTORICAL NOTE: Promulgated by the Board of Elementary and Secondary Education, LR 32:1024 (June 2006), amended LR 33:424 (March 2007), LR 33:2031 (October 2007), LR 35:2312 (November 2009), LR 36:2242 (October 2010), LR 36:2840 (December 2010), LR 38:

§611. Documenting a Graduation Index

A. Beginning with academic year 2005-2006, all schools are required to maintain the following documentation if the corresponding exit code is used.

Exit Code Documentation		
Code	**Descriptions**	**Required Documentation**
01	Expelled	Due process documentation supporting expulsion. Students must be enrolled on October 1 of the following year.
03	Illness	Letter from a physician stating the student's date(s) of care written on the doctor office's letterhead with the doctor's original signature. Students must be enrolled on October 1 of the following year.
04	Graduate with Diploma	Official transcript showing successful completion of requirements along with records supporting any academic or career/technical endorsements.
05	GED only	LDE confirmation document and entry/exit in SIS.
06	Certificate of Achievement (Special Education)	Official transcript showing successful completion of requirements
07	Death (of student) or permanent incapacitation	Letter from parent or obituary.
08	Transferred to another public school within district	SIS (Student Information System) record indicating transfer.
09	Transferred to another public school within Louisiana	SIS record indicating transfer.
10	Transferred out of state or country	Request for records from the receiving school (out of state). Request for records or a statement signed by the parent. Documentation proving a student was a foreign exchange student.
12	Transferred to Correctional Institution	SIS record indicating transfer.
13	Transferred to Vocational Technical School	SIS record indicating transfer.
14	Transferred to non-public school (must award high school diplomas)	Request for records from the receiving school
15	Exit from grade for reassignment to another grade	Test results, summer school grades or similar forms located in the student's cumulative records supporting the grade change
16	Transferred to home study/in-school Private Schooling	LDE Approval letter
17	Completed all Carnegie unit requirements but not the GEE	STS (Student Transcript System) record
20	Transferred to Early College Admissions Program	School withdrawal form and request for records from the College or University and proof of full-time enrollment in an academic program

Exit Code Documentation		
Code	Descriptions	Required Documentation
22	Options Program Completer: GED and Industry Based Certificate	STS and/or CATE (Career and Technical Education) record
23	Options Program Completer: GED and Locally Designed Skills Certificate	STS and/or CATE record
24	Options Program Completer: Industry Based Certification	STS and/or CATE record
25	Options Program Completer: Local Skills Certificate Only	STS and/or CATE record
27	Exit under SBESE Academic School Choice Policy	SIS record indicating transfer.
28	Exit under SBESE Unsafe School Choice Policy	SIS record indicating transfer.
34	Correctional Institution/State Custody (ages 17 and above)*	SIS record indicating transfer.
35	Transferred to LEA monitored Adult Education to pursue GED	SIS record indicating transfer.

B. - E. …

AUTHORITY NOTE: Promulgated in accordance with R.S. 17:10.1.

HISTORICAL NOTE: Promulgated by the Board of Elementary and Secondary Education, LR 32:1024 (June 2006), amended LR 35:639 (April 2009), LR 35:2312 (November 2009), LR 36:2242 (October 2010), LR 36:2841 (December 2010), LR 38:

§613. Calculating a Graduation Index

A. Points shall be assigned for each member of a cohort during the cohort's fourth year of high school according to the following table.

Student Result	Points
HS Diploma plus AP score of at least 3 OR IB Score of at least 4	150
BESE Approved Industry Based Certification OR Dual Enrollment OR AP score of 1 or 2 OR IB score of 1, 2, or 3	110
Regular HS Diploma	100
GED	25
5th Year Graduates	75
Dropout	0

B. The graduation index of a school shall be the average number of points earned by cohort members.

C. For each student who graduates in the fifth year, 75 points shall be awarded to the graduation index.

1. The diploma must be earned no later than the third administration of the summer retest following the fourth year of high school of the students' cohort. For example, a student who finishes the fourth year of high school in 2012 must complete the assessment requirements before or during the 2014 summer test administration.

2. When related to awarding fifth year graduate points, the enrollment must be continuous and consist of at least 45 calendar days.

D. To ensure the accuracy of data used to calculate the graduation index, the calculation shall lag one year behind the collection of the data (the index earned by the graduating class of 2012 will be used for 2013 accountability calculations).

AUTHORITY NOTE: Promulgated in accordance with R.S. 17:10.1.

HISTORICAL NOTE: Promulgated by the Board of Elementary and Secondary Education, LR 32:1025 (June 2006), amended LR 33:2031 (October 2007), LR 33:2594 (December 2007), LR 35:1472 (August 2009), LR 36:1769 (August 2010), repromulgated LR 36:1994 (September 2010), LR 36:2243 (October 2010), LR 37:3201 (November 2011), LR 38:

Chapter 7. Subgroup Component

§703. Inclusion of Students in the Subgroup Component

A. Students that meet the full academic year criteria, as described in §517 and as described in Paragraphs A.1-2 of this Section, shall be included in all subgroup component analyses for the AMO status test and reduction of non-proficient students (safe harbor test):

1. student is not exempted from testing due to medical illness, death of the student's family member(s), or the student being identified as LEP and in a-school in the United States for less than one full academic year;

2. student is a former LEP student for up to two years after no longer being considered LEP under state rules.

a. These students will not count toward the minimum n for the LEP subgroup.

B. - C.1.a.ii. …

b. districts that exceed the 2 percent cap may do so without penalty if the sum of LAA 1 and LAA 2 students labeled "proficient" does not exceed three percent of all students tested within the district unless:

i. - ii. …

c. when calculating the 1 percent, 2 percent, and 3 percent caps for alternate assessment purposes, all decimals in results shall be rounded to the next highest whole number.

i. 1.0 percent of 628 students is 6.28 students. The 1.0 percent cap, in this instance, is 7 students.

2. …

AUTHORITY NOTE: Promulgated in accordance with R.S. 17:10.1.

HISTORICAL NOTE: Promulgated by the Board of Elementary and Secondary Education, LR 29:2743 (December 2003), amended LR 30:1619 (August 2004), repromulgated LR 30:1996 (September 2004), amended LR 30:2256 (October 2004), amended LR 30:2445 (November 2004), LR 31:912 (April 2005), LR 31:2762 (November 2005), LR 33:253 (February 2007), LR 34:428 (March 2008), LR 34:867 (May 2008), LR 36:1991 (September 2010), LR 37:2119 (July 2011), LR 38:

§707. Safe Harbor

A. - B.2. …

a. achieves a 90 percent attendance rate (for schools without a 12th grade) (A 99 percent confidence interval is applied to the 90 percent attendance rate.); or

b. makes at least 0.1 percent improvement in attendance rate

C. For schools with a grade 12, a graduation rate will be calculated as described in §708.

D. Subgroups passing the participation rate test and achieving safe harbor shall be considered as having passed the subgroup component.

E. English language arts and mathematics test results from grades 3-8 and 10 LEAP, GEE, *i*LEAP, LAA 1, and LAA 2 will be used to calculate the reduction of non-proficient students in safe harbor.

AUTHORITY NOTE: Promulgated in accordance with R.S. 17:10.1.

HISTORICAL NOTE: Promulgated by the Board of Elementary and Secondary Education, LR 29:2743 (December 2003), amended LR 32:1025 (June 2006), LR 33:253 (February 2007), LR 33:2594 (December 2007), LR 38:

§708. Using a Graduation Rate in the Subgroup Component

A. - G. …

H. All subgroups and the whole school shall be evaluated using the steps delineated in this Section regardless of safe harbor considerations.

AUTHORITY NOTE: Promulgated in accordance with R.S. 17:10.1.

HISTORICAL NOTE: Promulgated by the Board of Elementary and Secondary Education, LR 32:1026 (June 2006), amended LR 33:424 (March 2007), LR 36:2243 (October 2010), LR 37:1122 (April 2011), LR 38:

§709. Failing the Subgroup Component

A. - B. …

1. achieved a 90 percent attendance rate (for schools without a 12th grade)/65 percent graduation rate, beginning in 2007 (for schools with a 12th grade) (A 99 percent confidence interval is applied to the 90 percent attendance rate; or

2. made at least 0.1 percent improvement in attendance rate (for schools without a 12th grade)~~;~~

3. beginning in fall 2011 using 2010 graduation data met one of the 5 criteria in §708.F, above for the whole school and each subgroup within the school with sufficient data for a valid and reliable decision.

NOTE: If a school in which all subgroups have passed the subgroup component does not pass the additional academic indicator, it shall not pass the subgroup component.

AUTHORITY NOTE: Promulgated in accordance with R.S. 17:10.1.

HISTORICAL NOTE: Promulgated by the Board of Elementary and Secondary Education, LR 29:2744 (December 2003), amended LR 30:2256 (October 2004), LR 32:1026 (June 2006, LR 33:2594 (December 2007), LR 37:1123 (April 2011), LR 38:

Chapter 9. Evaluating Improvement

§903. Growth Targets and Labels

Repealed.

AUTHORITY NOTE: Promulgated in accordance with R.S. 17:10.1.

HISTORICAL NOTE: Promulgated by the Board of Elementary and Secondary Education, LR 29:2744 (December 2003), amended LR 33:2595 (December 2007), LR 36:1992 (September 2010), repealed LR 38:

Chapter 11. School Performance Categories

§1101. Letter Grades

A. Beginning with the release of 2012-2013 school accountability data, schools will receive letter grades based on the school performance score (SPS).

Letter Grade	SPS Range
A	100.0-150
B	85.0-99.9
C	70.0-84.9
D	50.0-69.9
F	0-49.9

B. In addition to the letter grade, the LDE shall award schools the following labels:

1. if a school declines, it shall be labeled as "declining;" and

2. if a school qualifies as a reward school (described in §1301), it shall be labeled as a "top gains" school.

C. The LDE shall identify all schools that have selective, non-traditional academic admissions requirements.

D. The LDE shall identify all schools that are classified as alternative schools.

AUTHORITY NOTE: Promulgated in accordance with R.S. 17:10.1.

HISTORICAL NOTE: Promulgated by the Board of Elementary and Secondary Education, LR 37:2121 (July 2011), LR 38:

§1103. Honor Rolls

A. Beginning with the release of 2010-2011 school accountability data, the LDE shall produce a letter grade honor roll to recognize all schools that earn a letter grade of A or B.

B. Beginning with the release of 2010-2011 school accountability data, the LDE shall produce a graduation rate honor roll to recognize all schools with a graduation rate greater than or equal to the state average.

AUTHORITY NOTE: Promulgated in accordance with R.S. 17:10.1.

HISTORICAL NOTE: Promulgated by the Board of Elementary and Secondary Education, LR 37:2121 (July 2011), amended LR 38:

§1105. Turnaround Schools

A. If a turnaround operator takes over an entire school that was labeled "F" in the previous school year, including all previous grade levels and all former students of the "F" school, then the school's grade shall be reported as "T" for the first two years of operation.

B. However, all other metrics of the school performance report shall still be reported (e.g., SPS, subgroup performance).

AUTHORITY NOTE: Promulgated in accordance with R.S. 17:10.1.

HISTORICAL NOTE: Promulgated by the Board of Elementary and Secondary Education, LR 38:

Chapter 13. Rewards/Recognition

§1301. Reward Eligibility

A. A school shall be labeled a "reward school" if it meets the following growth goals.

1. For schools labeled an "A" for the previous academic year, such schools shall improve their SPS by five points (including status SPS growth, as well as any SPS bonus awarded for super subgroup growth). If an "A" school is within five points of the total possible points (i.e., 150), then the school shall need to reach an overall score of 150.

2. For schools labeled "B," "C," "D," or "F," such schools shall improve their SPS by 10 points (including status SPS growth, as well as any SPS bonus awarded for super subgroup growth).

B. Schools labeled as "reward schools" shall be eligible for financial rewards, as funds are available and as determined by the department.

AUTHORITY NOTE: Promulgated in accordance with R.S. 17:10.1.

HISTORICAL NOTE: Promulgated by the Board of Elementary and Secondary Education, LR 29:2744 (December 2003), amended LR 30:1446 (July 2004), LR 31:1513 (July 2005), LR 33:1334 (July 2007), LR 33:2595 (December 2007), LR 38:

§1303. Correction of Data

A. Districts and the LDE shall evaluate any instance of irregular or unusual data in the following respects for determining the allocation of rewards:

1. - 2. …

AUTHORITY NOTE: Promulgated in accordance with R.S. 17:10.1.

HISTORICAL NOTE: Promulgated by the Board of Elementary and Secondary Education, LR 29:2745 (December 2003), amended LR 38:

Chapter 14. Academic Assistance (formerly School Improvement 1)

§1401. Levels of Academic Assistance

Repealed.

AUTHORITY NOTE: Promulgated in accordance with R.S. 17:10.1.

HISTORICAL NOTE: Promulgated by the Board of Elementary and Secondary Education, LR 31:1513 (July 2005), amended LR 32:1026 (June 2006), repealed LR 38:

§1403. Entry into Academic Assistance

Repealed.

AUTHORITY NOTE: Promulgated in accordance with R.S. 17:10.1.

HISTORICAL NOTE: Promulgated by the Board of Elementary and Secondary Education, LR 31:1513 (July 2005), amended LR 33:2349 (November 2007), amended LR 35:641 (April 2009), repealed LR 38:

§1405. Movement in Academic Assistance

Repealed.

AUTHORITY NOTE: Promulgated in accordance with R.S. 17:10.1.

HISTORICAL NOTE: Promulgated by the Board of Elementary and Secondary Education, LR 31:1513 (July 2005), amended LR 33:2349 (November 2007), repealed LR 38:

Chapter 16. Academically Unacceptable Schools and Subgroup Component Failure

§1601. Entry into Academically Unacceptable School Status

A. For the 2011-2012 accountability release, schools with SPS of less than 75.0 out of 200 shall be labeled "academically unacceptable schools" (AUS). Beginning with the 2012-2013 accountability release, schools with SPS less than 50.0 out of 150 shall be labeled "AUS." All AUS schools shall implement remedies from the "academically unacceptable schools" table (below).

1. BESE may, during times of transition in the accountability system, waive schools meeting certain conditions from receiving the AUS label and/or from implementing certain remedies and sanctions.

B. A school shall enter AUS Level 1 when identified as AUS if the school was not labeled AUS the previous year, including schools that did not receive performance labels the previous year.

C. Schools progress to more serious levels of AUS based on the number of consecutive years a school has been labeled AUS.

D. Schools exit academically unacceptable school status when their SPSs are greater than or equal to 50.0.

E. Academically Unacceptable Schools

Academically Unacceptable Schools			
Level	**Remedy**	**Title 1**	**Non-Title 1**
AUS 1 (Year 1) (notified Aug. 1) - AUS 3 (Year 3)	School Choice	x	x
AUS 4+ (Year 4+)	Eligible for the RSD	x	x

AUTHORITY NOTE: Promulgated in accordance with R.S. 17:10.1.

HISTORICAL NOTE: Promulgated by the Board of Elementary and Secondary Education, LR 33:2595 (December 2007), amended LR 35:2312 (November 2009), LR 36:1770 (August 2010), LR 37:2121 (July 2011), LR 38:

§1603. Requirements for Academically Unacceptable Schools

A. …

B. Schools entering AUS Level 1 (AUS1)-AUS Level 3 (AUS3) must:

1. allow parents of students in academically unacceptable schools (AUS) to transfer their child to a higher performing public school as stated in Chapter 25;

2. supplemental education services (SES) are no longer a required remedy. However, if SES will be utilized in an "F" school, then the SES provider must be selected from a state-approved list of providers published annually by the LDE.

C. In compliance with R.S. 17:10.5, schools labeled AUS for four consecutive years are eligible for state takeover (other criteria may apply).

1. The means for this takeover occurring is a group submitting a proposal for a type 5 charter school and by BESE awarding a charter to the group.

2. Since multiple proposals may be submitted for one school, they are evaluated and the proposal most likely to succeed is most likely to receive the charter.

3. The LEA may also develop a proposal to keep and reconstitute its school.

AUTHORITY NOTE: Promulgated in accordance with R.S. 17:10.1.

HISTORICAL NOTE: Promulgated by the Board of Elementary and Secondary Education, LR 33:2596 (December 2007), amended LR 35:2313 (November 2009), LR 38:

§1607. Requirements for Schools Identified as Failing the Subgroup Component for Two Consecutive Years

A. Schools identified as entering subgroup component failure shall enter school improvement level 1. Each year the school improvement level shall be updated to reflect the number of years of subgroup failure.

B. Schools identified as SI1+ shall not qualify for "reward school" status or any of the benefits of such status.

AUTHORITY NOTE: Promulgated in accordance with R.S. 17:10.1.

HISTORICAL NOTE: Promulgated by the Board of Elementary and Secondary Education, LR 33:2597 (December 2007), amended LR 38:

§1609. Order of Priority for Remedies

Repealed.

AUTHORITY NOTE: Promulgated in accordance with R.S. 17:10.1.

HISTORICAL NOTE: Promulgated by the Board of Elementary and Secondary Education, LR 33:2597 (December 2007), repealed LR 38:

Chapter 19. School Improvement, Academically Unacceptable Schools and Subgroup Component Failure: District and State Level Tasks

§1901. District Level Tasks

Repealed.

AUTHORITY NOTE: Promulgated in accordance with R.S. 17:10.1.

HISTORICAL NOTE: Promulgated by the Board of Elementary and Secondary Education, LR 29:2748 (December 2003), amended LR 31:1515 (July 2005), LR 33:2598 (December 2007), LR 35:2313 (November 2009), repealed LR 38:

§1903. District Support at Each Level

Repealed.

AUTHORITY NOTE: Promulgated in accordance with R.S. 17:10.1.

HISTORICAL NOTE: Promulgated by the Board of Elementary and Secondary Education, LR 29:2748 (December 2003), amended LR 30:2745 (December 2004), LR 31:1516 (July 2005), LR 35:2313 (November 2009), repealed LR 38:

Chapter 20. Differentiated Accountability Pilot

§2001. Pilot Program, Timeframe, and Transition

Repealed.

AUTHORITY NOTE: Promulgated in accordance with R.S. 17:10.1.

HISTORICAL NOTE: Promulgated by the Board of Elementary and Secondary Education, LR 35:2745 (December 2009), repealed LR 38:

§2003. Academically Unacceptable Schools

Repealed.

AUTHORITY NOTE: Promulgated in accordance with R.S. 17:10.1.

HISTORICAL NOTE: Promulgated by the Board of Elementary and Secondary Education, LR 35:2746 (December 2009), repealed LR 38:

§2005. Subgroup Component Failure Category Determinations

Repealed.

AUTHORITY NOTE: Promulgated in accordance with R.S. 17:10.1.

HISTORICAL NOTE: Promulgated by the Board of Elementary and Secondary Education, LR 35:2746 (December 2009), repealed LR 38:

§2007. Requirements for Schools in Subgroup Component Failure

Repealed.

AUTHORITY NOTE: Promulgated in accordance with R.S. 17:10.1.

HISTORICAL NOTE: Promulgated by the Board of Elementary and Secondary Education, LR 35:2746 (December 2009), repealed LR 38:

Chapter 21. State-Level School Improvement, Academically Unacceptable Schools and Subgroup Component Failure Tasks

§2101. State Support at Each Level

A. State's responsibilities to districts with schools in school improvement, and schools labeled AUS or for subgroup component failure as aligned with Chapter 16 levels of remedies and sanctions, include:

1. providing a diagnostic process for schools through the network structure;

2. providing support and training through the network structure; and

3. providing an approved list of supplemental educational service providers should schools or districts wish to utilize supplemental educational services.

AUTHORITY NOTE: Promulgated in accordance with R.S. 17:10.1.

HISTORICAL NOTE: Promulgated by the Board of Elementary and Secondary Education, LR 29:2748 (December 2003), amended LR 30:2745 (December 2004), LR 31:1516 (July 2005), LR 32:1027 (June 2006), LR 33:2598 (December 2007), LR 35:2313 (November 2009), LR 38:

Chapter 23. Reconstitution/Alternate Governance Plans

§2301. Schools Requiring Reconstitution/Alternate Governance Plans

A. Districts shall notify SBESE of all school closures and reconstitutions by December 31 of the previous academic year. Notice shall include requests for site code changes, grade reconfigurations, and attendance zone changes.

AUTHORITY NOTE: Promulgated in accordance with R.S. 17:10.1.

HISTORICAL NOTE: Promulgated by the Board of Elementary and Secondary Education, LR 29:2749 (December 2003), amended LR 31:1516 (July 2005), LR 31:2765 (November 2005), LR 33:2599 (December 2007), LR 38:

Chapter 25. School Choice

§2501. Schools Requiring Choice

A. An LEA must develop a school choice policy for schools that are academically unacceptable.

A.1. - B. Repealed.

C. Beginning with the 2003-04 school year, an LEA shall notify parents of their school choice options not later than the first day of the school year for the schools that must offer choice.

1. An LEA must offer more than one choice to eligible students, if more than one school is eligible to receive students.

2. The LEA must take into account the parents' preferences among the choices offered, or the LEA may allow parents to make the final decision.

AUTHORITY NOTE: Promulgated in accordance with R.S. 17:10.1.

HISTORICAL NOTE: Promulgated by the Board of Elementary and Secondary Education, LR 29:2749 (December 2003), amended LR 33:2599 (December 2007), LR 38:

§2503. Student Eligibility

A. An LEA must offer choice to all students in an eligible school until the school is no longer identified as AUS except:

1. if an eligible student exercises the option to transfer to another public school, an LEA must permit the student to remain in that school until he or she has completed the highest grade in the school and shall provide transportation to the student.

AUTHORITY NOTE: Promulgated in accordance with R.S. 17:10.1.

HISTORICAL NOTE: Promulgated by the Board of Elementary and Secondary Education, LR 29:2749 (December 2003), amended LR 33:2599 (December 2007), LR 38:

§2507. School Choice Policy

Repealed.

AUTHORITY NOTE: Promulgated in accordance with R.S. 17:10.1.

HISTORICAL NOTE: Promulgated by the Board of Elementary and Secondary Education, LR 29:2750 (December 2003), repealed LR 38:

Chapter 29. Progress Report

§2901. State Annual Reporting

A. The SBESE shall report annually on the state's progress in reaching Louisiana's 2014 goal. The Louisiana Department of Education shall publish individual school reports to provide information on every school's performance. The school reports shall include the following information: school performance scores, percent proficient scores, and school progress in reaching growth targets. The LDE shall report subgroup performance to schools for the following subgroups:

1. African American;
2. American Indian/Alaskan Native;
3. Asian;
4. Hispanic;
5. white;
6. two or more races;
7. economically disadvantaged;
8. limited English proficient;
9. students with disabilities; and
10. all students.

AUTHORITY NOTE: Promulgated in accordance with R.S. 17:10.1.

HISTORICAL NOTE: Promulgated by the Board of Elementary and Secondary Education, LR 29:2751 (December 2003), amended LR 38:

Chapter 31. Data Correction and Appeals/Waivers Procedure

§3101. Appeals/Waivers and Data Certification Processes

A. - A.1. ...

a. The LDE shall provide a period (or periods) of not less than 30 calendar days for final review, correction, and verification of accountability data.

b. All cohort graduation data must be corrected during the year following its collection.

c. The LDE will provide training to district level staff on an annual basis.

2. All data correction must occur during the designated data certification period.

3. Each LEA must collect supporting documentation for every data element that is corrected and maintain the documentation on file for at least seven years.

4. Each school district shall create and implement a district data certification procedure that requires the site-based administrator at each accountable school to review all accountability data during the data certification period.

B. - C.1. …

2. The LDE shall review appeal/waiver requests and make recommendations to the SBESE during first regularly scheduled BESE sessions following the close of the appeal/waiver period. Within this interval, the LDE shall notify LEAs of its recommendations and allow them to respond in writing. The LDE's recommendations and LEA responses will be forwarded to SBESE for final disposition.

AUTHORITY NOTE: Promulgated in accordance with R.S. 17:10.1.

HISTORICAL NOTE: Promulgated by the Board of Elementary and Secondary Education, LR 29:2751 (December 2003), amended LR 30:1620 (August 2004), repromulgated LR 30:1996 (September 2004), amended LR 30:2257 (October 2004), LR 31:2422 (October 2005), LR 35:2313 (November 2009), LR 38:

§3105. General Guidelines—Parent/School-Level Requests

A. Parents or individual schools seeking an appeal or waiver on issues relating to Louisiana's District and School Accountability System shall file their requests, regardless of the type, through the local superintendent, charter school leader, or appointed representative as authorized by the local governing board of education.

AUTHORITY NOTE: Promulgated in accordance with R.S. 17:10.1.

HISTORICAL NOTE: Promulgated by the Board of Elementary and Secondary Education, LR 29:2752 (December 2003), amended LR 35:2314 (November 2009), LR 38:

§3107. General Guidelines—Local Board of Education-Level Requests

A. The local superintendent, charter school leader, or official representative of each local governing board of education shall complete the LDE's appeals/waivers request form and provide supporting documentation to the Division of Assessments and Accountability no later than 15 working days after the official release of the fall accountability results.

B. …

1. Requests concerning either the inclusion or exclusion of special education student scores in accountability calculations, except as outlined in Bulletin 111, shall not be considered by the LDE.

C. Supporting documentation for appeal/waiver requests should clearly outline the unforeseen and unusual factors that generate the requests. The local school system shall be responsible for supplying the LDE with information necessary for recalculating accountability components per applicable policy.

AUTHORITY NOTE: Promulgated in accordance with R.S. 17:10.1.

HISTORICAL NOTE: Promulgated by the Board of Elementary and Secondary Education, LR 29:2752 (December 2003), amended LR 30:2258 (October 2004), LR 31:1516 (July 2005), LR 35:2314 (November 2009), LR 38:

§3109. Criteria for Appeal

A. LEA superintendents or charter school leaders shall notify the LDE in writing of any changes to existing school configurations and newly opened schools no later than the 15 day appeal/waiver window during the first year of the reconfiguration and school opening. All school closures must be reported at the end of the schools' last academic year of operation.

B. LEAs may petition the SBESE in instances not addressed by policy or in instances when the policy is unclear.

C. An appeal shall be filed by the LEA in order to receive monetary rewards for any eligible closed school.

AUTHORITY NOTE: Promulgated in accordance with R.S. 17:10.1.

HISTORICAL NOTE: Promulgated by the Board of Elementary and Secondary Education, LR 29:2752 (December 2003), amended LR30:1620 (August 2004), repromulgated LR

30:1997 (September 2004), amended LR 31:1517 (July 2005), LR 31:2423 (October 2005), LR 35:2314 (November 2009), LR 38:

§3111. Criteria for Waiver

Repealed.

AUTHORITY NOTE: Promulgated in accordance with R.S. 17:10.1.

HISTORICAL NOTE: Promulgated by the Board of Elementary and Secondary Education, LR 29:2752 (December 2003), amended LR 31:1517 (July 2005), LR 31:2423 (October 2005), LR 35:2315 (November 2009), repealed LR 38:

Chapter 33. New Schools and/or Significantly Reconfigured Schools

§3301. Inclusion of New Schools

A. - B. …

C. New K-8 schools (in existing LEAs) with one year of test data shall be included in accountability. For dropout/credit accumulation data, the district average for elementary schools will be used.

D. The new high school in an existing LEA shall enter accountability using its first year of assessment data.

1. This adjusted assessment index shall be used as a first year SPS to assign letter grades.

2. The graduation index calculated from the school's first graduating class shall be included as a SPS indicator.

E. Schools with the same first three digits of their six digit site codes are in the same district/LEA when district averages must be used for accountability purposes.

F. Schools that do not align with the patterns described in this section will be included in accountability as soon as the required data is available.

AUTHORITY NOTE: Promulgated in accordance with R.S. 17:10.1.

HISTORICAL NOTE: Promulgated by the Board of Elementary and Secondary Education, LR 29:2753 (December 2003), amended LR 31:2765 (November 2005), LR 33:2599 (December 2007), LR 36:1992 (September 2010), LR 37:3201 (November 2011), LR 38:

§3303. Reconfigured Schools

A. - E. …

F. A district with a K-8 school with a greater than 50 percent change in student enrollment, excluding expected grade progression, may request that the school receive a SPS using the first year of assessment data under the new configuration and a district average for dropout/credit accumulation data.

G. …

AUTHORITY NOTE: Promulgated in accordance with R.S. 17:10.1.

HISTORICAL NOTE: Promulgated by the Board of Elementary and Secondary Education, LR 29:2753 (December 2003), amended LR 30:2446 (November 2004), LR 31:2765 (November 2005), LR 33:2600 (December 2007), LR 36:1993 (September 2010), LR 37:3201 (November 2011), LR 38:

Chapter 37. Inclusion of Lab Schools and Charter Schools

§3701. Special Consideration of Lab and Charter Schools

Repealed.

AUTHORITY NOTE: Promulgated in accordance with R.S. 17:10.1.

HISTORICAL NOTE: Promulgated by the Board of Elementary and Secondary Education, LR 29:2754 (December 2003), amended LR 33:2600 (December 2007), LR 36:1993 (September 2010), repealed LR 38:

Chapter 39. Inclusion of Students with Disabilities

§3901. Assessment of Students with Disabilities

A. All students, including those with disabilities, shall participate in Louisiana's testing program. The scores of all students who are eligible to take the LEAP, iLEAP, EOC assessments, ACT, PLAN, EXPLORE, LAA 1, or LAA 2 shall be included in the calculation of the SPS. Most students with disabilities shall take the assessments with accommodations, if required by their individualized education program (IEP).

1. Only students with significant cognitive disabilities are eligible to participate in LEAP Alternate Assessment Level 1 (LAA 1) as defined by the LEAP Alternate Assessment Level 1 Participation Criteria.

2. Students with disabilities in grades 4 through 11, who are functioning significantly below enrolled grade level are eligible to participate in LEAP Alternate Assessment Level 2 (LAA 2) as defined by the LEAP Alternate Assessment Level 2 Participation Criteria. However, LAA 2 assessments will be phased out and no longer administered by 2014-15.

AUTHORITY NOTE: Promulgated in accordance with R.S. 17:10.1.

HISTORICAL NOTE: Promulgated by the Board of Elementary and Secondary Education, LR 29:2754 (December 2003), amended LR 31:2763 (November 2005), LR 36:1994 (September 2010), LR 38:

§3905. Inclusion of Alternate Assessment Results

A. All SPS shall include LAA1 scores.

B. Each LAA 1 exam will be assigned one of three performance levels (exceeds standard, meets standard, working toward standard) and each performance level will be assigned points for use in assessment index calculations as follows.

LAA 1 Performance Level	Assessment Points
Exceeds Standard	150
Meets Standard	100
Working Toward Standard	0

1. - 2. …

C. LAA 2 shall be given in grades 4-11.

1. Each LAA 2 exam will be assigned one of four performance levels (basic, approaching basic, foundational, and pre-foundational) and each performance level will be assigned points for use in assessment index calculations as follows.

LAA 2 Performance Level	Assessment Points
Basic	150
Approaching Basic	100
Foundational	0
Pre-Foundational	0

C.2. - D. …

AUTHORITY NOTE: Promulgated in accordance with R.S. 17:10.1.

HISTORICAL NOTE: Promulgated by the Board of Elementary and Secondary Education, LR 29:2754 (December 2003), amended LR 30:767 (April 2004), LR 31:2763 (November 2005), LR 33:254 (February 2007), LR 35:2031 (October 2008), LR 35:640 (April 2009), LR 35:641 (April 2009), LR 38:

Chapter 40. Definitions Related to English Proficiency

§4001. Proficient in English

A. - A.1.a. …

b. at composite level V on ELDA and at grade-level/benchmark/low-risk on a standardized reading assessment, such as DIBELS Next.

2. For grades 3-8:

a. composite level V on ELDA; or, in the same year;

b. at composite level 4 IV on ELDA and at proficient on the ELA or English language arts state content assessment.

3. For grades 9-12:

a. composite level V on the ELDA: or, in the same year;

b. at composite level IV on the ELDA and at proficient on ELA or English state content assessment in the most recent academic year.

B. …

AUTHORITY NOTE: Promulgated in accordance with R.S. 17:10.1.

HISTORICAL NOTE: Promulgated by the Board of Elementary and Secondary Education, LR 30:767 (April 2004), amended LR 33:254 (February 2007), LR 34:2552 (December 2008), LR 36:2243 (October 2010), LR 38:

Chapter 41. Data Collection and Data Verification

§4101. Valid Data Considerations

A. *Unusual Data Result (UDR)*—any CRT, NRT, attendance, dropout/credit accumulation, and graduation data that exceeds a parameter or a range of parameters, which shall be determined by the LDE and approved by the SBESE.

1. *Irregular Data*—any data, which appears to contradict results, which are otherwise expected; unrealistic information; or data generated as a result of defective data collection or processing.

B. - D. …

1. For example, if four students in fall 2011 are coded as "out-of-state" transfers, it is determined in August 2012 that no documentation exists to support this exit code, and the students are not found enrolled in another Louisiana school; these four students will be changed to dropouts and counted as such in the 2012 accountability results, and if applicable, in the appropriate cohort for any graduation index calculations beginning in 2013.

D.2. - E. …

AUTHORITY NOTE: Promulgated in accordance with R.S. 17:10.1.

HISTORICAL NOTE: Promulgated by the Board of Elementary and Secondary Education, LR 29:2754 (December 2003), amended LR 30:2446 (November 2004), LR 32:1028 (June 2006), LR 38:

§4103. NRT and CRT Data

A. - A.2. ....

a. if the test data are determined to be inaccurate, invalid, and/or undocumented the LDE shall void or correct the data as described in §4101;

3. …

AUTHORITY NOTE: Promulgated in accordance with R.S. 17:10.1.

HISTORICAL NOTE: Promulgated by the Board of Elementary and Secondary Education, LR 29:2755 (December 2003), amended LR 32:1029 (June 2006), LR 38:

§4104. Dropout/Exit Data

A. - A.3. …

B. If there is insufficient documentation to validate the use of any student exit codes, the LDE shall void or correct the data as described in §4101.

AUTHORITY NOTE: Promulgated in accordance with R.S. 17:10.1.

HISTORICAL NOTE: Promulgated by the Board of Elementary and Secondary Education, LR 32:1029 (June 2006), amended LR 38:

Chapter 43. District Accountability

§4301. Inclusion of All Districts

A. - C.2. …

D. Subgroup Component. District AYP shall be determined by evaluating the aggregate performance of subgroups.

AUTHORITY NOTE: Promulgated in accordance with R.S. 17:10.1.

HISTORICAL NOTE: Promulgated by the Board of Elementary and Secondary Education, LR 29:2755 (December 2003), amended LR 30:1446 (July 2004), LR 32:543 (April 2006), LR 37:2119 (July 2011), LR 38:

§4303. Indicator 1—Summer School

Repealed.

AUTHORITY NOTE: Promulgated in accordance with R.S. 17:10.1.

HISTORICAL NOTE: Promulgated by the Board of Elementary and Secondary Education, LR 29:2755 (December 2003), amended LR 31:1256 (July 2005), repealed LR 38:

§4305. Indicator 2—The Change in SPS for All Schools Relative to Growth Targets

Repealed.

AUTHORITY NOTE: Promulgated in accordance with R.S. 17:10.1.

HISTORICAL NOTE: Promulgated by the Board of Elementary and Secondary Education, LR 29:2756 (December 2003), repealed LR 38:

§4307. Indicator 3—The Change in LEAP 21 First-Time Passing Rate from One Year to the Next

Repealed.

AUTHORITY NOTE: Promulgated in accordance with R.S. 17:10.1.

HISTORICAL NOTE: Promulgated by the Board of Elementary and Secondary Education, LR 29:2756 (December 2003), amended LR 31:913 (April 2005), repealed LR 38:

§4309. Indicator 4—Classes Taught by Certified Teachers

Repealed.

AUTHORITY NOTE: Promulgated in accordance with R.S. 17:10.1.

HISTORICAL NOTE: Promulgated by the Board of Elementary and Secondary Education, LR 29:2756 (December 2003), amended LR 30:1447 (July 2004), repealed LR 38:

§4311. District Letter Grades

A. The Louisiana Department of Education shall report district scores and labels on every school district. Districts shall be assigned a district letter grade using their district performance score as follows.

Letter Grade	Scale
A	100.0-150.0
B	85.0-99.9
C	70.0-84.9
D	50.0-69.9
F	0-49.9

AUTHORITY NOTE: Promulgated in accordance with R.S. 17:10.1.

HISTORICAL NOTE: Promulgated by the Board of Elementary and Secondary Education, LR 37:2120 (July 2011), amended LR 38:

§4313. Corrective Actions

Repealed.

AUTHORITY NOTE: Promulgated in accordance with R.S. 17:10.1.

HISTORICAL NOTE: Promulgated by the Board of Elementary and Secondary Education, LR 29:2757 (December 2003), amended LR 30:1449 (July 2004), LR 31:424 (February 2005), LR 31:635 (March 2005), LR 31:1256 (July 2005), LR 33:1334 (July 2007), LR 33:1612 (August 2007), LR 33:2032 (October 2007), LR 34:429 (March 2008), LR 37:2120 (July 2011), LR 37:3203 (November 2011), repealed LR 38:

§4315. Progress Report

A. The Louisiana Department of Education shall publish a district accountability report. The report shall contain the labels for the DPS. The report shall also contain the percent poverty, poverty ranking, and percentage of students enrolled in public education for the district, as well as data from the subgroup component.

AUTHORITY NOTE: Promulgated in accordance with R.S. 17:10.1.

HISTORICAL NOTE: Promulgated by the Board of Elementary and Secondary Education, LR 29:2757 (December 2003), amended LR 30:1449 (July 2004), LR 33:635 (April 2007), LR 38:

Chapter 45. Disaster Considerations for School and District Accountability

§4509. Assessment Index Calculations with Displaced Students for Limited Impact Schools

A. When student mobility occurs prior to October 1 of a given academic year as a result of a disaster, the data collected during that academic year for calculating the assessment index (for use in the SPS) shall be evaluated in two ways:

1. - 2. …

B. Letter grades shall be assigned and SPS reported using the lower of the two assessment indices, except:

1. when using the higher of the two prevents a school from being labeled academically unacceptable, the higher assessment index shall be used.

C. The lower of the two assessment indices shall be used the following academic year in the SPS for reporting and assigning letter grades, except:

1. when using the higher of the two prevents a school from being labeled academically unacceptable, the higher assessment index shall be used.

D. If large numbers of displaced students impact a school's performance due to intra-district transfers, the district may appeal during the established appeal/waiver period following the official fall release of accountability results.

AUTHORITY NOTE: Promulgated in accordance with R.S. 17:10.1.

HISTORICAL NOTE: Promulgated by the Board of Elementary and Secondary Education, LR 32:1413 (August 2006), amended LR 37:2120 (July 2011), LR 38:

§4527. Disaster Considerations for the School and District Subgroup Component

A.1. - A.2. …

B. For the subgroup component and for all schools not excluded in Subsection A (above), displaced students shall comprise a separate subgroup and be excluded from all other subgroups.

1. - 2.a. …

3. Due to the one year lag in attendance and dropout/graduation data, and as required by the U.S. Department of Education, the displaced students subgroup attendance and dropout/graduation data shall be used in the appropriate subgroups, not as displaced students. District should make extra effort during the clean-up period to verify that any exit and attendance data is accurate.

4. All students in the displaced students subgroup that did not score proficient in ELA and/or math at the spring test administration must receive remediation in the following academic year.

5. …

AUTHORITY NOTE: Promulgated in accordance with R.S. 17:10.1.

HISTORICAL NOTE: Promulgated by the Board of Elementary and Secondary Education, LR 32:1414 (August 2006), amended LR 32:2035 (November 2006), LR 33:254 (February 2007), LR 38:

Chapter 51. Distinguished Educator Program

§5101. Definition of a Distinguished Educator

Repealed.

AUTHORITY NOTE: Promulgated in accordance with R.S. 17:10.1.

HISTORICAL NOTE: Promulgated by the Board of Elementary and Secondary Education, LR 36:1770 (August 2010), repealed LR 38:

§5103. Role of the Distinguished Educator

Repealed.

AUTHORITY NOTE: Promulgated in accordance with R.S. 17:10.1.

HISTORICAL NOTE: Promulgated by the Board of Elementary and Secondary Education, LR 36:1770 (August 2010), repealed LR 38:

Family Impact Statement

In accordance with Section 953 and 974 of Title 49 of the Louisiana Revised Statutes, there is hereby submitted a Family Impact Statement on the Rule proposed for adoption, repeal or amendment. All Family Impact Statements shall be kept on file in the state board office which has adopted, amended, or repealed a Rule in accordance with the applicable provisions of the law relating to public records.

1. Will the proposed Rule affect the stability of the family? No.

2. Will the proposed Rule affect the authority and rights of parents regarding the education and supervision of their children? No.

3. Will the proposed Rule affect the functioning of the family? No.

4. Will the proposed Rule affect family earnings and family budget? No.

5. Will the proposed Rule affect the behavior and personal responsibility of children? No.

6. Is the family or a local government able to perform the function as contained in the proposed Rule? No.

Small Business Statement

The impact of the proposed Rule on small businesses as defined in the Regulatory Flexibility Act has been

considered. It is estimated that the proposed action is not expected to have a significant adverse impact on small businesses. The agency, consistent with health, safety, environmental and economic welfare factors has considered and, where possible, utilized regulatory methods in the drafting of the proposed Rule that will accomplish the objectives of applicable statutes while minimizing the adverse impact of the proposed Rule on small businesses.

Public Comments

Interested persons may submit written comments via the U.S. Mail until 4:30 p.m., September 19, 2012, to Nina A. Ford, State Board of Elementary and Secondary Education, P.O. Box 94064, Capitol Station, Baton Rouge, LA 70804-9064.

Catherine R. Pozniak
Executive Director

FISCAL AND ECONOMIC IMPACT STATEMENT FOR ADMINISTRATIVE RULES
RULE TITLE: Bulletin 111—The Louisiana School, District and State Accountability System

I. ESTIMATED IMPLEMENTATION COSTS (SAVINGS) TO STATE OR LOCAL GOVERNMENT UNITS (Summary)

Proposed changes in Bulletin 111 reflect new policy approved in Louisiana's Elementary and Secondary Education Act (ESEA) Flexibility Request that was approved for implementation by the United States Department of Education. By implementing the new system, the Louisiana Department of Education (LDE) can relieve Local Education Agencies (LEAs) from burdensome reporting requirements and provide increased flexibility in $375 million of federal funding. LEAs will no longer be responsible for using Title 1 funds to supply Supplemental Education Services (SES) or previously required professional development. Funds from ESEA-authorized programs may be transferred to Title I and LEAs will be able to redirect Title I dollars to concentrate on funding activities that will positively impact student performance.

Districts will be required to provide school choice to any student attending a school labeled Academically Unacceptable and provide transportation to that student until they choose to leave or complete the highest grade in the school. This may result in an increased transportation cost for the district, but will vary by district and year. Schools may use a variety of options for this funding including Title 1 funding and other federal dollars. There will be no implementation costs for state governmental units.

II. ESTIMATED EFFECT ON REVENUE COLLECTIONS OF STATE OR LOCAL GOVERNMENTAL UNITS (Summary)

There will be no effect on revenue collections of state or local governmental units.

III. ESTIMATED COSTS AND/OR ECONOMIC BENEFITS TO DIRECTLY AFFECTED PERSONS OR NONGOVERNMENTAL GROUPS (Summary)

There will be no estimated costs and/or economic benefits to directly affected persons or non-governmental groups.

IV. ESTIMATED EFFECT ON COMPETITION AND EMPLOYMENT (Summary)

There will be no effect on competition and employment.

Beth Scioneaux
Deputy Superintendent
1208#028

Evan Brasseaux
Staff Director
Legislative Fiscal Office

NOTICE OF INTENT

Board of Elementary and Secondary Education

Bulletin 126—Charter Schools (LAC 28:CXXXIX. 307, 503, 512, 513, 515, 701, 1101, 1301, 1303, 1502, 1503, 1701, 1903, 2501, 2705, 2709, 2901, and 2903)

In accordance with R.S. 49:950, et seq., the Administrative Procedure Act, notice is hereby given that the Board of Elementary and Secondary Education approved for advertisement revisions to *Bulletin 126—Charter Schools:* §307. Local School Board Duties, §503. Eligibility to Apply for a Type 2 Charter School, §512. Application Process for Locally Authorized Charter Schools, §513. Stages of Application Cycle for BESE-Authorized Charter Schools, §515. Charter School Application Components, §701. Charter School Contract with BESE, §1101. Charter School Evaluation, §1301. Initial Charter, §1303. Extension Review, §1502. BESE Processes for Charter Renewal, §1503. Charter Renewal Process and Timeline, §1701. Reasons for Revocation, §1903. Material Amendments for BESE-Authorized Charter Schools, §2501. Qualified and Competent Business Professional, §2705. Admission Requirements, §2709. Enrollment of Students, Lottery, and Waitlist, and §2901. Employment of Staff. The proposed policy revision will ensure alignment with Act 2 of the 2012 legislative session.

Title 28
EDUCATION
Part CXXXIX. Bulletin 126—Charter Schools
Chapter 3. Charter School Authorizers
§307. Local School Board Duties

A. - A.4.…

5. if requested by a charter school, provide transportation services to a charter school student pursuant to R.S. 17:158.

a. The charter school shall reimburse the local school board for the actual cost of providing such transportation unless an amount less than the actual cost is agreed upon by both parties.

AUTHORITY NOTE: Promulgated in accordance with R.S. 17:6(A)(10), R.S. 17:3981, R.S. 17:3982, and R.S. 17:3983.

HISTORICAL NOTE: Promulgated by the Board of Elementary and Secondary Education in LR 34:1359 (July 2008), amended LR 37:868 (March 2011), LR 38:

Chapter 5. Charter School Application and Approval Process
§503. Eligibility to Apply for a Type 2 Charter School

A. - A.4.…

5. except as provided in Subsection B or C of this Section, has submitted a proposal for a Type 1 or Type 3 charter school to the local school board in whose jurisdiction the charter school is proposed to be located which:

5.a. - 6.…

B. Applicants applying to operate a charter school which is to be located in a local school system in academic crisis are not required to submit a Type 1 charter application to such local school system and may submit a proposal for a Type 2 charter school directly to BESE.

C. If the local school system in which a charter group intends to apply to operate a Type 1 or Type 3 charter school

has received a letter grade designation of "D" or "F" or any variation thereof, then a proposal for a Type 2 charter school may be made to the state board.

D. The eligibility criteria set forth in this section shall be the minimum criteria necessary to apply for a Type 2 charter, but shall in no way limit the information required in §513.C., Eligibility Review.

AUTHORITY NOTE: Promulgated in accordance with R.S. 17:6(A)(10). R.S. 17:3973, R.S. 17:3981, R.S. 17:3982, R.S. 17:3983, and R.S. 17:3991.

HISTORICAL NOTE: Promulgated by the Board of Elementary and Secondary Education in LR 34:1360 (July 2008), amended LR 37:868 (March 2011), LR 38:

§512. Application Process for Locally Authorized Charter Schools

A. - A.2. …

3. Prior to the consideration of a charter school proposal by any local school board, each charter applicant shall be afforded the opportunity to provide a written response to the independent evaluation of the application. Such response shall be available to the independent reviewers for consideration prior to issuing a final recommendation to the chartering authority.

AUTHORITY NOTE: Promulgated in accordance with R.S. 17:6(A)(10), R.S. 17:3981, R.S. 17:3981, and R.S. 17:3983.

HISTORICAL NOTE: Promulgated by the Board of Elementary and Secondary Education in LR 37:869 (March 2011), amended LR 38:750 (March 2012), LR 38:

§513. Stages of Application Cycle for BESE-Authorized Charter Schools

A. - G. …

H. Prior to the consideration of a charter school proposal by BESE, each charter applicant shall be afforded the opportunity to provide a written response to the independent evaluation of the application. Such response shall be available to the independent reviewers for consideration prior to issuing a final recommendation to BESE.

AUTHORITY NOTE: Promulgated in accordance with R.S. 17:6(A)(10) and R.S. 17:3981.

HISTORICAL NOTE: Promulgated by the Board of Elementary and Secondary Education in LR 34:1361 (July 2008), amended LR 37:869 (March 2011), LR 38:750 (March 2012), LR 38:1392 (June 2012), amended LR 38:

§515. Charter School Application Components

A. …

B. A framework of all BESE requests for applications, which shall include an assurance that all required sections are or will be included in the final request for applications, must be submitted to the state board by the Department prior to the release of the request. In cases of a Type 5 charter operator voluntarily relinquishing its charter, the state superintendent of education may issue an emergency request for applications and BESE shall be notified of such action within two business days.

C. - H.11. ...

AUTHORITY NOTE: Promulgated in accordance with R.S. 17:6(A)(10), R.S. 17:3981, and R.S. 17:3991.

HISTORICAL NOTE: Promulgated by the Board of Elementary and Secondary Education in LR 34:1362 (July 2008), amended LR 37:869 (March 2011), LR 37:2383 (August 2011), LR 38:38 (January 2012), LR 38:750 (March 2012), repromulgated LR 38:1392 (June 2012), LR 38:1583 (July 2012), repromulgated LR 38:1393 (June 2012), amended LR 38:

Chapter 7. Charter School Performance Contract

§701. Charter School Contract with BESE

A. - D.2. …

E. Contracts between charter operators and management organizations may be reviewed by the Department to ensure compliance with the provisions of paragraph D of this section. Any contracts entered into between charter operators for the provision of services shall require an assurance statement signed by the presidents of the charter operators' board of directors to be submitted to the Department. The assurance statement shall indicate that both parties have complied with the provisions of paragraph D of this section.

AUTHORITY NOTE: Promulgated in accordance with R.S. 17:6(A)(10) and R.S. 17:3981.

HISTORICAL NOTE: Promulgated by the Board of Elementary and Secondary Education in LR 34:1363 (July 2008), amended LR 37:2385 (August 2011), LR 38:751 (March 2012), LR 38:

Chapter 11. Ongoing Review of Charter Schools

§1101. Charter School Evaluation

A. - D.7.a.i.(d). ...

* * *

b. Repealed.

D.8. -F.3. …

AUTHORITY NOTE: Promulgated in accordance with R.S. 17:6(A)(10), R.S. 17:3981, and R.S. 17:3991.

HISTORICAL NOTE: Promulgated by the Board of Elementary and Secondary Education in LR 34:1363 (July 2008), amended LR 37:871 (March 2011), repromulgated LR 37:1124 (April 2011), amended LR 37:2385 (August 2011), LR 38:751 (March 2012), repromulgated LR 38:1393 (June 2012), amended LR 38:

Chapter 13. Charter Term

§1301. Initial Charter

A. An approved charter shall be valid for an initial term of four years.

B. A charter operator shall have a right to operate a charter school during its initial four year term unless the charter is revoked or surrendered.

C. A charter operator's right to operate a charter school shall cease upon the expiration of the initial four year term, unless the charter operator is granted an extension to operate for a fifth year.

AUTHORITY NOTE: Promulgated in accordance with R.S. 17:6(A)(10), R.S. 17:3981, and R.S. 17:3992.

HISTORICAL NOTE: Promulgated by the Board of Elementary and Secondary Education in LR 34:1366 (July 2008), amended LR 38:

§1303. Extension Review

A. Each charter school shall be reviewed by its chartering authority after the completion of the third year of operation. If the charter school is achieving its stated goals and objectives pursuant to its approved charter, then the chartering authority shall extend the duration of the charter for a maximum initial term of five years. If the charter school is not achieving its stated goals and objectives pursuant to its approved charter, then the chartering authority shall not extend the duration of the charter, and the charter shall expire at the end of the school's fourth year.

B. Each Type 2, Type 4, and Type 5 charter school's Extension Review shall be used to determine if the school will receive a one-year extension, as follows.

1. Contract Extension

a. Each charter school shall be reviewed based on academic, financial, and legal and contractual performance data collected by the Office of Parental Options or the recovery school district. If such performance data reveal that the charter school is achieving the following goals and objectives, the board shall extend the duration of the charter for a maximum initial term of five years.

1.a.i. - 1.a.iii.c. …

b. Repealed.

2. - 2.a.i. …

ii. allow the charter to expire at the end of the school's fourth year of operation

3. Probationary Extension

a. A charter school granted a probationary extension shall:

a.i. - b.i …

ii. If, upon consideration for initial renewal, a charter school placed on probationary extension has not resolved all of the issues related to its probation status, the State Superintendent may recommend that the board deny the charter school's request for renewal.

AUTHORITY NOTE: Promulgated in accordance with R.S. 17:6(A)(10).

HISTORICAL NOTE: Promulgated by the Board of Elementary and Secondary Education in LR 34:1367 (July 2008), amended LR 37:2387 (August 2011), LR 38:751 (March 2012), repromulgated LR 38:1393 (June 2012), amended LR 38:

Chapter 15. Charter Renewal

§1502. BESE Processes for Charter Renewal

A. For BESE-authorized charters, the State Superintendent shall make a recommendation to BESE as to whether a charter renewal application should be approved.

B. …

C. The process for renewing a school charter shall be based on a thorough review of the charter school's operations, student academic performance, and compliance with charter requirements.

AUTHORITY NOTE: Promulgated in accordance with R.S. 17:6(A)(10), R.S. 17:3981 and R.S. 17:3992.

HISTORICAL NOTE: Promulgated by the Board of Elementary and Secondary Education in LR 34:1367 (July 2008), amended LR 37:871 (March 2011), LR 38:

§1503. Charter Renewal Process and Timeline

A. - B.2. …

* * *

3. A charter school in its initial term where fewer than 50 percent of its enrolled grades are testable under state accountability will be eligible for a renewal term of three years.

4. A BESE-authorized charter school receiving an academically unacceptable performance label based on performance on the state's assessment and accountability program based on year four test data (or the year prior to the submission of a renewal application for subsequent renewals) will not be eligible for renewal, unless one of these conditions are met:

a. a charter school that by contract serves a unique student population where an alternate evaluation tool has been established between the charter operator and the Board may be renewed for a term not to exceed five years;

b. a charter school in its initial term that is in AUS status, but which met its growth target at the end of year four or which has a growth performance score of above AUS may be renewed for a term not to exceed three years;

c. a charter school in its initial term that is in AUS status, but where fewer than 30 percent of its enrolled grades are testable under state accountability, may be renewed for a term not to exceed three years;

d. if, in the superintendent's judgment, the non-renewal of an AUS status charter school in its initial charter term would likely require many students to attend lower performing schools, and the superintendent recommends its renewal, the charter may be renewed for a term not to exceed three years. Prior to recommending such renewal, the superintendent must demonstrate that efforts to find a new, high-quality operator for the school were unsuccessful;

e. the school has made 20 points of assessment index growth from its pre-assessment index.

C. - C.3. …

4. BESE Standards for Financial Performance. BESE may reduce the renewal term by a year for any charter school that has been found to require "monitoring" or "dialogue" as part of their most recent fiscal risk assessment. No term shall be less than three years.

C.5. - E. …

1. The department will establish a process by which each charter school shall be required to indicate whether it will be seeking initial renewal.

2. Not later than January of the charter school's fifth year, the state superintendent of education will make a recommendation to BESE about the disposition of any school seeking renewal. The basis for the recommendation will be the charter school's student, financial, and legal and contractual performance during years one through four of the charter contract.

3. - 3.c. …

4. The State Superintendent of Education may recommend a corrective action plan as a condition for renewal for any charter school that qualifies for renewal, but fails to fully meet any performance standards. The board may make the execution of the renewal charter contract contingent upon the completion of all or some of the actions required by the corrective action plan. The board may also direct the department to include all or some of the actions required by the corrective action plan to be incorporated into the charter contract so that failure to complete corrective actions may serve as grounds for revocation.

E.5. - F. …

1. The department will establish a process by which each charter school shall be required to indicate whether it will be seeking a subsequent renewal.

2. Not later than January of the charter school's final contract year, the state superintendent of education will make a recommendation to BESE about the disposition of any school seeking renewal. The basis for the recommendation will be the charter school's student, financial, legal and contractual performance during its current charter contract.

3. Based on the school's academic, financial, and legal and contractual performance over the current charter contract term, the superintendent may recommend one of the following actions:

a. renewal for the maximum term identified in the School Performance Labels and Maximum Charter Renewal

Terms table, with the addition of one year to the charter term for every year that the school's growth target was met, not to exceed a maximum term of ten years;

b. renewal for a shorter term (based on deficiencies in financial and/or legal/contract performance); or

c. non-renewal.

4. A recommendation for non-renewal may also include a recommendation that a new charter provider operate the school.

G. - G.3. …

AUTHORITY NOTE: Promulgated in accordance with R.S. 17:6(A)(10), R.S. 17:3981 and R.S. 17:3992.

HISTORICAL NOTE: Promulgated by the Board of Elementary and Secondary Education, LR 36:479 (March 2010), amended LR 37:871 (March 2011), LR 37:2388 (August 2011), LR 38:752 (March 2012), repromulgated LR 38:1394 (June 2012), amended LR 38:

Chapter 17. Revocation

§1701. Reasons for Revocation

A. - B.1. …

2. any other reasons for revocation listed as such in a charter school's charter contract.

3. Repealed.

AUTHORITY NOTE: Promulgated in accordance with R.S. 17:6(A)(10), R.S. 17:3981 and R.S. 17:3992.

HISTORICAL NOTE: Promulgated by the Board of Elementary and Secondary Education in LR 34:1368 (July 2008), amended LR 37:872 (March 2011), LR 38:

Chapter 19. Amendments to BESE-Authorized Charters

§1903. Material Amendments for BESE-Authorized Charter Schools

A. - A.3. …

4. changes in student enrollment which result in enrollment in excess of 120 percent of the total number of students set forth in the school's charter, applicable;

a. The Superintendent of the Recovery School District is authorized to amend the charter of any Type 5 charter school participating in a unified enrollment system administered by the Recovery School District for the purpose of adjusting student enrollment limitations.

A.5 - E.3.c. …

AUTHORITY NOTE: Promulgated in accordance with R.S. 17:6(A)(10), R.S. 17:3981, and R.S. 17:3992.

HISTORICAL NOTE: Promulgated by the Board of Elementary and Secondary Education in LR 34:1369 (July 2008), amended LR 37:873 (March 2011), LR 37:2389 (August 2011), LR 38:752 (March 2012), repromulgated LR 38:1394 (June 2012), amended LR 38:

Chapter 25. Charter School Fiscal Responsibilities

§2501. Qualified and Competent Business Professional

A. Each Type 2 and Type 5 charter operator shall retain a qualified and competent business professional who shall produce all financial and accounting information and reporting required by its charter contract, state law, and BESE policy, except as otherwise provided herein.

B. - E. …

AUTHORITY NOTE: Promulgated in accordance with R.S. 17:6(A)(10), R.S. 17:3981, R.S. 17:3991, and R.S. 17:3995.

HISTORICAL NOTE: Promulgated by the Board of Elementary and Secondary Education in LR 34:1373 (July 2008), amended LR 38:

Chapter 27. Charter School Recruitment and Enrollment

§2705. Admission Requirements

A. …

B. Admission requirements imposed by a school must be set forth in the charter school's approved charter and shall be specific and shall include a system for admission decisions which precludes exclusion of pupils based on race, religion, gender, ethnicity, national origin, intelligence level as ascertained by an intelligence quotient examination, or identification as a child with an exceptionality as defined in R.S. 17:1942(B). Such admission requirements may include, however, specific requirements related to a school's mission such as auditions for schools with a performing arts mission or proficiency in a foreign language for schools with a language immersion mission. Any charter school which began operation prior to July 1, 2012, and which incorporated achievement of a certain academic record as part of its admissions requirements may continue to utilize such admission requirements. No charter school beginning operation on or after July 1, 2012 may incorporate the achievement of a certain academic record as part of its admission requirements.

AUTHORITY NOTE: Promulgated in accordance with R.S. 17:6(A)(10), R.S. 17:3981, and R.S. 17:3991.

HISTORICAL NOTE: Promulgated by the Board of Elementary and Secondary Education in LR 34:1374 (July 2008), amended LR 37:875 (March 2011), LR 38:

§2709. Enrollment of Students, Lottery, and Waitlist

A. - I. …

J. Type 5 charter schools transferred to the recovery school district pursuant to R.S. 17:10.5 and R.S. 17:10.7 shall comply with any unified enrollment system established by the recovery school district for the parish or region where the charter school is located. Other charter schools located within parishes where the recovery school district has established a unified enrollment system may participate in the unified enrollment system upon approval by their charter boards. The recovery school district may create any policies and procedures to implement a unified enrollment system not prohibited by this chapter, and may conduct one or more central lotteries to enroll students at participating schools, and enroll students applying or requesting transfers after the application period has ended.

AUTHORITY NOTE: Promulgated in accordance with R.S. 17:6(A)(10), R.S. 17:3981, and R.S. 17:3991.

HISTORICAL NOTE: Promulgated by the Board of Elementary and Secondary Education in LR 34:1374 (July 2008), amended LR 38:753 (March 2012), repromulgated LR 38:1395 (June 2012), amended LR 38:

Chapter 29. Charter School Staff

§2901. Employment of Staff

A. Each charter operator may employ faculty and staff members as it deems necessary. Each member of the instructional staff of each charter school shall have at least a baccalaureate degree. For the purposes of this section, "instructional staff" refers to any individual teaching a course in a charter school for which he or she would otherwise be required to be certified under Bulletin 746, except for those individuals who would otherwise be eligible for ancillary certification as defined in Bulletin 746.

B. - F. …

AUTHORITY NOTE: Promulgated in accordance with R.S. 17:6(A)(10) R.S. 17:3973, R.S. 17:3981, and R.S. 17:3997.

HISTORICAL NOTE: Promulgated by the Board of Elementary and Secondary Education in LR 34:1375 (July 2008), amended LR 38:

§2903. Certification

Repealed.

AUTHORITY NOTE: Promulgated in accordance with R.S. 17:6(A)(10), R.S. 17:3981, and R.S. 17:3991.

HISTORICAL NOTE: Promulgated by the Board of Elementary and Secondary Education in LR 34:1375 (July 2008), repealed LR 38:

Family Impact Statement

In accordance with Section 953 and 974 of Title 49 of the Louisiana Revised Statutes, there is hereby submitted a Family Impact Statement on the Rule proposed for adoption, repeal or amendment. All Family Impact Statements shall be kept on file in the state board office which has adopted, amended, or repealed a Rule in accordance with the applicable provisions of the law relating to public records.

1. Will the proposed Rule affect the stability of the family? No.
2. Will the proposed Rule affect the authority and rights of parents regarding the education and supervision of their children? No.
3. Will the proposed Rule affect the functioning of the family? No.
4. Will the proposed Rule affect family earnings and family budget? No.
5. Will the proposed Rule affect the behavior and personal responsibility of children? No.
6. Is the family or a local government able to perform the function as contained in the proposed Rule? No.

Small Business Statement

The impact of the proposed Rule on small businesses as defined in the Regulatory Flexibility Act has been considered. It is estimated that the proposed action is not expected to have a significant adverse impact on small businesses. The agency, consistent with health, safety, environmental and economic welfare factors has considered and, where possible, utilized regulatory methods in the drafting of the proposed rule that will accomplish the objectives of applicable statutes while minimizing the adverse impact of the proposed rule on small businesses.

Public Comments

Interested persons may submit written comments via the U.S. Mail until 4:30 p.m., September 19, 2012 to Nina A. Ford, State Board of Elementary and Secondary Education, P.O. Box 94064, Capitol Station, Baton Rouge, LA 70804-9064.

Catherine R. Pozniak
Executive Director

FISCAL AND ECONOMIC IMPACT STATEMENT FOR ADMINISTRATIVE RULES
RULE TITLE: Bulletin 126—Charter Schools

I. ESTIMATED IMPLEMENTATION COSTS (SAVINGS) TO STATE OR LOCAL GOVERNMENT UNITS (Summary)

The proposed policy revision will ensure alignment with Act 2 of the 2012 legislative session and with other laws still in effect. The adoption of this policy will cost the Department of Education approximately $700 (printing and postage) to disseminate the policy.

II. ESTIMATED EFFECT ON REVENUE COLLECTIONS OF STATE OR LOCAL GOVERNMENTAL UNITS (Summary)

This policy will have no effect on revenue collections.

III. ESTIMATED COSTS AND/OR ECONOMIC BENEFITS TO DIRECTLY AFFECTED PERSONS OR NONGOVERNMENTAL GROUPS (Summary)

No costs and/or economic benefits are anticipated for directly affected persons or non-governmental groups.

IV. ESTIMATED EFFECT ON COMPETITION AND EMPLOYMENT (Summary)

This policy will have no effect on competition and employment.

Beth Scioneaux	H. Gordon Monk
Deputy Superintendent	Legislative Fiscal Officer
1208#043	Legislative Fiscal Office

NOTICE OF INTENT

Board of Elementary and Secondary Education

Bulletin 129—The Recovery School District
Parent Petitions (LAC 28:CXLV.502)

In accordance with R.S. 49:950 et seq., the Administrative Procedure Act, notice is hereby given that the Board of Elementary and Secondary Education approved for advertisement revisions to *Bulletin 129—The Recovery School District:* §502. Parent Petition. The proposed policy revision will create a parent petition process to transfer schools that have earned a letter grade of "D" or "F" to the Recovery School District as required by Act 2 of the 2012 Regular Legislative Session.

Title 28
EDUCATION
Part CXLV. Bulletin 129—The Recovery School District
Chapter 5. Failed Schools
§502. Parent Petitions

A. Pursuant to R.S. 17:10.5, a public school that has received a letter grade of "D" or "F," or any variation thereof, for three consecutive years shall be removed from the jurisdiction of the city, parish, or local public school board, or other public entity and transferred to the jurisdiction of the Recovery School District (RSD) if parents or legal guardians representing at least a majority of the students attending the school sign a petition requesting that the school be transferred to the RSD, and such transfer is approved by the State Board of Elementary and Secondary Education, in accordance with the requirements and procedures below. The effective date of transfer to the RSD shall be July 1st following the approval of such transfer.

B. Eligibility and Notification

1. The department shall make available on the LDE website information related to parent petitions, including, but not limited to, a list of schools eligible for the parent petition process, parent petition samples or forms, procedures and deadlines for completing and submitting parent petitions, and notification of receipt of parent petitions by the department.

2. On an annual basis, after completion of each year's state accountability assessment cycle, the department shall release a list of schools for which the department will accept parent petitions for that year's parent petition cycle. An

eligible school is any public school that is not currently under the jurisdiction of the RSD and that has received a letter grade of "D" or "F," or any variation thereof, for three consecutive years.

a. For the purposes of this section:

i. A 2010 school performance score (SPS) of 60.0 to 79.9 will equate to a "D" letter grade;

ii. A 2010 school performance score (SPS) below 60.0 will equate to an "F" letter grade.

3. With the release of the list of eligible schools, the department shall release a standard parent petition and an estimate of the minimum number of parent or legal guardian signatures required for each eligible school. The minimum number of required parent or legal guardian signatures will be 50 percent plus one signature of the total number of students attending the school. The estimated minimum number of required parent or legal guardian signatures shall be based on the official student enrollment count from October 1st of the previous school year. In cases where there has been a significant change in the number of students attending the school since that time, for example, due to a change in grade configuration at the school, the department will determine an estimated number to reflect these changes. The final minimum number of required parent or legal guardian signatures will be based on the official student enrollment count from October 1st of the current school year.

C. Completing Parent Petitions

1. The standard parent petition released by the department shall be used to complete parent petitions for eligible schools. No other form or type of parent petition will be accepted by the department. Signatures may not be collected prior to the date of the annual release of the list of eligible schools by the department.

2. Parent petitions may only be signed by a parent or legal guardian of a student currently attending the eligible school.

3. Each student may be signed for by his parents or legal guardians only once on any given petition, such that each student equals one signature.

4. The standard parent petition may request the following information to be completed by parents or legal guardians of students: printed name of student; relationship of signatory to student; printed name of signatory; signature of parent or legal guardian; date of signature; parent or legal guardian contact information; a consent statement for purposes of sharing the petition as a public record; and the identification of "lead petitioners" to assist and facilitate communication between the parents and legal guardians who have signed the petition and the department; and any other information deemed necessary by the department.

5. The standard petition shall also clearly state all rules and procedures for completing and submitting a parent petition.

D. Prohibited Practices

1. Parents or legal guardians shall be free from harassment, threats, and intimidation related to circulation of or signing a petition. No person shall knowingly, willfully, or intentionally:

a. intimidate, deceive, or misinform, directly or indirectly, any parent or legal guardian in matters concerning the circulation of or signing a petition;

b. intimidate a person by the use of violence, force, or threats with the intent to influence that person's decision to sign or not sign the parent petition, or to impede such person's ingress or egress from accessing the parent petition;

c. without lawful authority, obstruct, hinder, or delay any parent or legal guardian on his way to or while returning home from any gathering or information session related to the circulation of or signing a parent petition, or while returning home from such place.

2. No person shall give or offer to give, directly or indirectly, any money, or anything of apparent present or prospective value to any parent or legal guardian with the intent to influence the parent or legal guardian in relation to the circulation or signing of a parent petition.

3. No person shall:

a. sign the parent petition, knowing that he is not qualified, or influence or attempt to influence another to sign the parent petition, knowing such person to be unqualified to sign or the signature to be fraudulent;

b. forge the signature of another or sign the parent petition using an assumed or fictitious name; or

c. forge, alter, add to, deface, take, destroy, or remove from any parent or legal guardian a parent petition that such parent or legal guardian is attempting to circulate or sign.

4. Any signature determined by the department to have been made as a result of prohibited practices may be deemed invalid.

5. Any person harassing, threatening, or intimidating parents or legal guardians related to the circulation of signing a parent petition may be subject to criminal prosecution under the laws of this state, including, but not limited to R.S. 14:122.1, 14:285, or 14:329.1.

6. Employees of any public school or school district, or members or employees of any city, parish, or local public school board, or other public entity governing a public school shall not utilize school or district resources to support or oppose any effort by petitioning parents or legal guardians to gather signatures and submit a petition.

E. Submission of Petitions

1. Petitions must be submitted to the department, in accordance with the processes and procedures specified by the department, no later than ninety calendar days following the release of the list of eligible schools and the standard petition by the department.

2. Petitioners may not submit a petition until they reach or exceed the required minimum number of signatures specified by the department.

F. Review of Petitions

1. Upon timely receipt of a submitted parent petition, the department will review the petition to ensure that the petition has the minimum number of required signatures.

a. Only one signature per student will be counted.

b. Only original signatures will be counted. Photo-copied signatures will not be counted.

2. If the department finds that the number of valid signatures is fewer than the minimum number of required signatures, parents or legal guardians shall have thirty calendar days, commencing with a date specified by the department, to resolve such discrepancies and collect the additional signatures.

3. Once the department has determined the parent petition has the minimum number of signatures required, the department shall post a notification on its website. The notification shall include information identifying the school that is the subject of the completed parent petition, procedures for requesting a copy of the parent petition through a public records request, and procedures and deadlines for challenging the validity of a signature on the parent petition. The department shall also send this information, via certified mail, to the superintendent and city, parish, or local public school board, or other public entity governing the school which is the subject of the parent petition on the same day the notification is published online.

4. The department shall create a signature review and verification process that meets the following requirements:

a. The signatures on the parent petition will be assumed valid unless challenged or there is reasonable doubt of their validity.

b. The department's website will clearly explain the procedures for challenging the validity of a signature on the parent petition.

c. The department shall accept challenges to the validity of signatures on a parent petition at a minimum, for 15 business days after publishing the online notification of the completed parent petition. The department shall respond to all public records requests for copies of the parent petition within three business days of receipt of the request.

d. The department shall determine acceptable challenges to the validity of a signature as follows:

i. Acceptable challenges to the validity of a signature shall include, but not be limited to: the student identified in the parent petition was not enrolled in the school on the date of the parent or legal guardian's signature; the person signing the petition is not the identified student's parent or legal guardian; the signature is a forgery; the signature was made as a result of harassment, threat, or intimidation; or the signature was made in exchange for a gift of, or offer to give, directly or indirectly, any money, or anything of apparent present or prospective value.

ii. Unacceptable challenges to the validity of a signature shall include, but not be limited to: incorrect dates on the parent petition; the name of student, parent, or legal guardian is misspelled, or does not match student, parent, or legal guardian records on file at the school; or a parent or legal guardian wishes to revoke their valid signature.

e. Notwithstanding the above, signatures shall not be discounted over technicalities if the clear intent of the parent or legal guardian was to support the petition.

f. If validity is challenged or doubted for a number of signatures that, if invalidated, would bring the number of signatures on the parent petition below the majority required, the department shall review and verify the signatures within 45 calendar days.

g. The school and the city, parish, or other local public school board, or other public entity that is the subject of the parent petition shall provide assistance requested by the department for the purpose of verifying signatures.

5. The department shall maintain records regarding the contents and outcomes of the petition.

G. Outcome of Petitions

1. After the department has verified signatures, as necessary, and has determined that the number of valid signatures on the parent petition meets the minimum number of required signatures, authority is hereby delegated to the state superintendent to approve the transfer of the school to the jurisdiction of the RSD no later than March 31st preceding the effective date of the transfer. Approval of such transfer shall be reported to the State Board of Elementary and Secondary Education (BESE) at the next scheduled BESE meeting.

a. The state superintendent shall approve transfers to the Recovery School District under this section for all parent petitions that have been completed successfully and appropriately, in accordance with the policies and procedures in this section, subject to the capacity of the RSD and availability of funds and resources necessary to complete the transfer and manage or oversee the operation of the school, as determined by the state superintendent.

b. BESE reserves the right to limit the number of schools that may be approved by the state superintendent each year for transfer to the RSD under this section.

c. The department shall provide notice of the approval of the transfer to the RSD by posting on the department's website, sending written notice via certified mail to the city, parish, or local school board, or other public entity from which the school shall be transferred, and contacting the lead petitioners identified on the parent petition. The date of such notification on the department's website shall serve as the date the transfer to the RSD is officially approved.

2. For each parent petition received by the department, the state superintendent shall submit a written report to BESE which shall include, at a minimum, the following: dates the petition was received by the department; number of total signatures on the parent petition; number of valid signatures on the parent petition; summary of the department's signature verification process, specific actions taken by the department in response to challenges made to signatures on the petition, as applicable, and whether the state superintendent approved the transfer of the school to the jurisdiction of the RSD.

3. The president of BESE may appoint a subcommittee of BESE members to serve in an advisory capacity and review the parent petition and report to ensure that the petition was completed successfully and that the procedures outlined in this section have been properly followed. The membership of the subcommittee shall include the BESE member representing the district in which the school that is the subject of the parent petition is located.

H. Transfer to the Recovery School District

1. A school transferred to the jurisdiction of the RSD pursuant to this section may be directly operated by the RSD or operated as a Type 5 charter school by an approved charter operator.

2. Upon transfer of a school to the RSD under this section, the RSD shall engage in community outreach with parents, legal guardians, and members of the community in which the school is located to consult regarding school model and other operational decisions.

I. Student Enrollment

1. The city, parish, local public school board, or other public entity from which a school is transferred to the RSD under this section shall create enrollment policies allowing students who choose not to remain enrolled at the school as a

result of the school's transfer to the RSD to transfer to another school operated by the city, parish, local public school board, or other public entity.

AUTHORITY NOTE: Promulgated in accordance with R.S. 17.7; R.S. 17.10.5

HISTORICAL NOTE: Promulgated by the Board of Elementary and Secondary Education, LR 38:

Family Impact Statement

In accordance with Section 953 and 974 of Title 49 of the Louisiana Revised Statutes, there is hereby submitted a Family Impact Statement on the Rule proposed for adoption, repeal or amendment. All Family Impact Statements shall be kept on file in the state board office which has adopted, amended, or repealed a Rule in accordance with the applicable provisions of the law relating to public records.

1. Will the proposed Rule affect the stability of the family? No.
2. Will the proposed Rule affect the authority and rights of parents regarding the education and supervision of their children? No.
3. Will the proposed Rule affect the functioning of the family? No.
4. Will the proposed Rule affect family earnings and family budget? No.
5. Will the proposed Rule affect the behavior and personal responsibility of children? No.
6. Is the family or a local government able to perform the function as contained in the proposed Rule? No.

Small Business Statement

The impact of the proposed Rule on small businesses as defined in the Regulatory Flexibility Act has been considered. It is estimated that the proposed action is not expected to have a significant adverse impact on small businesses. The agency, consistent with health, safety, environmental and economic welfare factors has considered and, where possible, utilized regulatory methods in the drafting of the proposed rule that will accomplish the objectives of applicable statutes while minimizing the adverse impact of the proposed rule on small businesses.

Public Comments

Interested persons may submit written comments via the U.S. Mail until 4:30 p.m., September 19, 2012 to Nina A. Ford, State Board of Elementary and Secondary Education, P.O. Box 94064, Capitol Station, Baton Rouge, LA 70804-9064.

Catherine R. Pozniak
Executive Director

FISCAL AND ECONOMIC IMPACT STATEMENT FOR ADMINISTRATIVE RULES
RULE TITLE: Bulletin 129—The Recovery School District—Parent Petitions

I. ESTIMATED IMPLEMENTATION COSTS (SAVINGS) TO STATE OR LOCAL GOVERNMENT UNITS (Summary)

The proposed policy revision will provide a mechanism by which parents of students enrolled in a school with a score of "D" or "F" for three consecutive years may petition to have the school transferred from the local district to the Recovery School District. The adoption of this policy will cost the department of Education approximately $700 (printing and postage) to disseminate the policy.

II. ESTIMATED EFFECT ON REVENUE COLLECTIONS OF STATE OR LOCAL GOVERNMENTAL UNITS (Summary)

This policy will have no effect on revenue collections.

III. ESTIMATED COSTS AND/OR ECONOMIC BENEFITS TO DIRECTLY AFFECTED PERSONS OR NONGOVERNMENTAL GROUPS (Summary)

Neither costs nor economic benefits are expected to result from this policy.

IV. ESTIMATED EFFECT ON COMPETITION AND EMPLOYMENT (Summary)

This policy will have no effect on competition and employment.

Beth Scioneaux	H. Gordon Monk
Deputy Superintendent	Legislative Fiscal Officer
1208#042	Legislative Fiscal Office

NOTICE OF INTENT

Board of Elementary and Secondary Education

Bulletin 130—Regulations for the Evaluation and Assessment of School Personnel—Measures of Growth in Student Learning—Value-Added Model (LAC 28:CXLVII.303)

In accordance with R.S. 49:950 et seq., the Administrative Procedure Act, notice is hereby given that the Board of Elementary and Secondary Education approved for advertisement revisions to *Bulletin 130—Regulations for the Evaluation and Assessment of School Personnel:* §303. Measures of Growth in Student Learning-Value-Added Model. The proposed policy revision will require that the value-added model not be used in any cases where there are fewer than 10 students with value-added results assigned to an educator.

Title 28
EDUCATION
Part CXLVII. Bulletin 130—Regulations for the Evaluation and Assessment of School Personnel
Chapter 3. Personnel Evaluations
§303. Measures of Growth in Student Learning—Value-Added Model

A. …

B. The value-added model shall be applied to grades and subjects that participate in state-wide standardized tests and for which appropriate prior testing data is available. The value-added model shall not be applied for the purposes of evaluation in any cases in which there are fewer than 10 students with value-added results assigned to an educator.

C. - F. …

AUTHORITY NOTE: Promulgated in accordance with R.S. 17:6(A)(10), R.S. 17:10.1, R.S. 17:391.10, R.S. 17:3881-3886, R.S. 17:3901-3904, and R.S. 17:3997.

HISTORICAL NOTE: Promulgated by the Board of Elementary and Secondary Education, LR 38:1216 (May 2012), amended LR 38:

Family Impact Statement

In accordance with Section 953 and 974 of Title 49 of the Louisiana Revised Statutes, there is hereby submitted a Family Impact Statement on the Rule proposed for adoption, repeal or amendment. All Family Impact Statements shall be kept on file in the state board office which has adopted, amended, or repealed a Rule in accordance with the applicable provisions of the law relating to public records.

1. Will the proposed Rule affect the stability of the family? No.

2. Will the proposed Rule affect the authority and rights of parents regarding the education and supervision of their children? No.

3. Will the proposed Rule affect the functioning of the family? No.

4. Will the proposed Rule affect family earnings and family budget? No.

5. Will the proposed Rule affect the behavior and personal responsibility of children? No.

6. Is the family or a local government able to perform the function as contained in the proposed Rule? No.

Small Business Statement

The impact of the proposed Rule on small businesses as defined in the Regulatory Flexibility Act has been considered. It is estimated that the proposed action is not expected to have a significant adverse impact on small businesses. The agency, consistent with health, safety, environmental and economic welfare factors has considered and, where possible, utilized regulatory methods in the drafting of the proposed Rule that will accomplish the objectives of applicable statutes while minimizing the adverse impact of the proposed Rule on small businesses.

Public Comments

Interested persons may submit written comments via the U.S. Mail until 4:30 p.m., September 19, 2012, to Nina A. Ford, State Board of Elementary and Secondary Education, P.O. Box 94064, Capitol Station, Baton Rouge, LA 70804-9064.

Catherine R. Pozniak
Executive Director

FISCAL AND ECONOMIC IMPACT STATEMENT FOR ADMINISTRATIVE RULES
RULE TITLE: Bulletin 130—Regulations for the Evaluation and Assessment of School Personnel—Measures ofGrowth in Student Learning—Value-Added Model

I. ESTIMATED IMPLEMENTATION COSTS (SAVINGS) TO STATE OR LOCAL GOVERNMENT UNITS (Summary)

The proposed policy requires that teachers have a minimum of ten eligible students in order to receive a value-added score for the purpose of incorporating measures of student growth into their evaluations. This change will not create any additional costs for the state in the process of conducting the value-added analysis, and there is no charge to districts receiving this data. The adoption of this policy will cost the Department of Education approximately $700 (printing and postage) to disseminate the policy.

II. ESTIMATED EFFECT ON REVENUE COLLECTIONS OF STATE OR LOCAL GOVERNMENTAL UNITS (Summary)

This policy will have no effect on revenue collections.

III. ESTIMATED COSTS AND/OR ECONOMIC BENEFITS TO DIRECTLY AFFECTED PERSONS OR NONGOVERNMENTAL GROUPS (Summary)

This policy will have no effect on costs and/or economic benefits to directly affected persons or non-governmental groups.

IV. ESTIMATED EFFECT ON COMPETITION AND EMPLOYMENT (Summary)

This policy will require that teachers have a minimum of ten eligible students before value-added data will be incorporated into their performance evaluations and used to make employment decisions.

Beth Scioneaux
Deputy Superintendent
1208#041

H. Gordon Monk
Legislative Fiscal Officer
Legislative Fiscal Office

NOTICE OF INTENT

Board of Elementary and Secondary Education

Bulletin 132—Louisiana Course Choice Program
(LAC 28:CXLIX.101, 103, 105, 301, 303, 501, 503, 505, 507, 701, 703, 901, 1101, and 1301)

In accordance with R.S. 49:950 et seq., the Administrative Procedure Act, notice is hereby given that the Board of Elementary and Secondary Education approved for advertisement the creation of *Bulletin 132—Louisiana Course Choice Program:* §101. Purpose, Scope, and Effect, §103. Definitions, §105. Purpose of Content, §301. Course Choice Program Authorization, §303. BESE Duties Relating to Course Choice Program, §501. General Provisions, §503. Course Provider Curriculum, §505. Course Provider Instructional Staff, §507. Online Course Providers, §701. Local Education Authority (LEA) Duties, §703. Local Education Authority Procedures for Student Enrollment, §901. Parental/Guardian Duties, §1101. Program Funding, and §1301. Provider Evaluation. The proposed policy provides rules to govern the implementation of the Louisiana Course Choice Program in accordance with R.S. 17:4002.1-4002.6. The policy establishes the requirements for participating in the Course Choice Program, the principles and requirements of authorizing a course provider, the student funding structure, and the implementation of and enactment of regulatory requirements that must be met in the operation of the Course Choice Program. The policy establishes procedures for monitoring and evaluating course providers, and amending, renewing, and revoking course providers approved by the Board of Elementary and Secondary Education.

Title 28
EDUCATION
Part CXLIX. Bulletin 132—Louisiana Course Choice Program

Chapter 1. General Provisions

§101. Purpose, Scope, and Effect

A. The purpose of this bulletin is to provide rules to govern the implementation of R.S. 17:4002 et seq., the "course providers" (hereafter, the "Course Choice Program").

B. This bulletin is established to set forth the requirements for participating in the Course Choice Program, the principles and requirements of authorizing a course provider, the student funding structure, and the implementation of and enactment of regulatory requirements that must be met in the operation of the Course Choice Program.

AUTHORITY NOTE: Promulgated in accordance with R.S. 17.7 and R.S. 17.4002.2.

HISTORICAL NOTE: Promulgated by the Board of Elementary and Secondary Education, LR 38:

§103. Definitions

Course Provider—an entity that offers individual courses in person or online, including but not limited to online or virtual education providers, postsecondary education institutions, including any postsecondary institution under the management of the Board of Supervisors of Community and Technical Colleges, educational entrepreneurs (teachers or groups of teachers) with proven track records of successful instruction, and business and industry that offer vocational or technical course work in their fields, and have been authorized to provide such courses by the state board.

Eligible Funded Student—any student who resides in Louisiana and meets one of the following criteria:

1. is attending a public school that received a letter grade of "C," "D," or "F," or any variation thereof, according to the Louisiana School and District Accountability System;

2. is attending a public school that does not offer the course in which the student desires to enroll, as determined by the state board; or

3. is a scholarship recipient pursuant to R.S. 17:4013 and attends a participating school in accordance with R.S. 17:4011-4025.

Eligible Participating Student—any student who resides in Louisiana and meets one of the following criteria:

1. is attending a public school that has received a letter grade of "A" or "B," or any variation thereof, according to the School and District Accountability system;

2. is attending a nonpublic school that is approved, provisionally approved, or probationally approved by the state board pursuant to R.S. 17:11; or

3. is enrolled in a home study program approved by the state board.

AUTHORITY NOTE: Promulgated in accordance with R.S. 17.7 and R.S.17.4002.2.

HISTORICAL NOTE: Promulgated by the Board of Elementary and Secondary Education, LR 38:

§105. Purpose of Course Choice Program

A. The Course Choice Program was enacted by the Louisiana Legislature so that all Louisiana school children have access to the type and format of education that best meets the needs of the individual student. Each student has different needs that merit a variety of course choices on the individual student level, and that the state has the right, responsibility, duty and obligation to accomplish the objective of a quality, individualized education for all Louisiana children.

B. Course providers can offer a quality, individualized education to students, and it is in the public interest to offer students the means of accessing the educational opportunities offered by course providers by providing students with the public funds allocated to them from local and state sources to enroll in such courses.

AUTHORITY NOTE: Promulgated in accordance with R.S. 17.7 and R.S. 17.4002.2-4002.3.

HISTORICAL NOTE: Promulgated by the Board of Elementary and Secondary Education, LR 38:

Chapter 3. Course Choice Authorizers

§301. Course Choice Program Authorization

A. The state Board of Elementary and Secondary Education (BESE) shall authorize the operation and eligibility of providers to participate in the Course Choice Program. BESE shall determine:

1. whether each proposed course provider complies with the applicable law and rules;

2. whether a proposal is valid, complete, financially well-structured, and educationally sound;

3. whether a proposal provides a plan for collecting data in accordance with R.S. 17:3911; and

4. whether a proposal offers potential for increased learning opportunities and access to quality education for all Louisiana students.

B. BESE shall provide for an independent evaluation of course choice provider proposals by a third party with educational, organizational, legal, and financial expertise.

AUTHORITY NOTE: Promulgated in accordance with R.S. 17.7 and R.S. 4002.3.

HISTORICAL NOTE: Promulgated by the Board of Elementary and Secondary Education, LR 38:

§303. BESE Duties Relating to Course Choice Program

A. BESE, as the authorizer of the Course Choice Program, shall implement a comprehensive application for course providers that will include, at a minimum, the following:

1. a plan for the administration of state assessments as required by the school and district accountability system, except to students as defined by R.S. 17:4002.3(2)(c);

2. the parishes or local education authority (LEA) in which the course provider will operate;

3. proposed courses offered, alignment of the courses by the course provider with the requirements of R.S. 17:24.4, and the designated length of each course offered within a window established by the Department of Education;

4. alignment of the courses offered by the course provider with any type of approved Louisiana diploma, including the college and career diploma, the career diploma, and diplomas from approved nonpublic schools and home school programs;

a. BESE will focus the selection process on the following:

i. core academic subject offerings;

ii. career and technical education (CTE) course offerings, including internships and apprenticeships, that tie directly to current and future workforce needs of Louisiana as defined by the Louisiana Workforce Commission in its most recent jobs forecast and lead to industry-based certifications; and

iii. college credit course offerings (either Advanced Placement/IB credit or "dual enrollment" college credit);

5. alignment of CTE courses, offered by the course provider, to work-based learning required standards as outlined in Bulletin 741, LAC 28:CXV.3113;

6. assurances that the course provider shall, to the best of its ability, collaborate and coordinate with the LEA in

which an eligible funded student or eligible participating student is enrolled full time;

B. BESE shall maintain a course catalogue for all courses offered by parish.

C. BESE shall provide for common course numbering of all courses listed in the course catalogue and for determining whether courses are in compliance with R.S. 17:24.4. For courses offered by postsecondary education institutions that are authorized course providers, the state board shall consult with the Board of Regents.

D. BESE shall provide for a reciprocal instructor certification process for instructors who reside in other states but who are employed by authorized course providers and teach virtual education courses to satisfy the state certification requirements pursuant to R.S. 17:7.1.

E. BESE shall monitor and evaluate the course provider in accordance with BESE-established performance expectations. Student achievement shall be the predominant criterion.

AUTHORITY NOTE: Promulgated in accordance with R.S. 17.7 and R.S. 4002.4.

HISTORICAL NOTE: Promulgated by the Board of Elementary and Secondary Education, LR 38:

Chapter 5. Course Providers

§501. General Provisions

A. Any entity who wishes to become a course provider must apply through the course choice authorization process and adhere to all standards outlined in a signed agreement between the state board and the provider.

B. All course providers must be in compliance with all applicable state and federal laws, rules, and regulations in regards to the proposed curriculum, and have the ability to serve students with disabilities, students who are English language learners, students who are academically behind, and gifted students.

C. The characteristics of a quality course provider include:

1. understanding Louisiana's standards for required course content (structure, materials, evaluation / accountability components, etc.) and reflecting this understanding in their application package and proposed course materials;

2. understanding and embracing Louisiana's commitment to educate all its children, including special needs children, and reflecting this understanding by including special education components in their application packages and proposed course materials;

3. maintaining the financial strength and human capital depth to offer properly staffed and properly designed course offerings, making them available to the broadest possible cross-section of Louisiana students;

4. recognizing and addressing the varied educational challenges Louisiana faces, with course offerings that effectively address one or more of the Course Choice Program goals;

5. emphasizing a commitment to accountability through:

a. rigorous, clear and measurable standards for student achievement in each course;

b. effective and timely reporting on student performance levels;

c. utilizing standard state, regional or national academic assessment systems or industry certifications; and

d. clear standards for measuring and reporting on their own course performance;

6. maintaining a commitment to the long-term vision driving the Course Choice Program—preparing Louisiana's students to obtain post-secondary degrees and high-quality, high-paying twenty-first century jobs.

D. All Course Choice Program providers must agree to and have a plan to service students with special needs through instruction, materials, and/or technology. All eligible participating students with an individual education plan (IEP) will be entitled to Special Education services through the school in which he/she is enrolled including, but not limited to, assisting course providers in implementing the accommodations within the IEP.

E. Students will be added and dropped as outlined in the student's LEA pupil progression plan, or official policy.

F. All Course Choice Program providers will adhere to the uniform grading policy established in Bulletin 741, LAC 28:CXV.2302 for students enrolled in all grades K-12 for which letter grades are used. Business and industry providers will provide for credits for students seeking to obtain the career diploma.

AUTHORITY NOTE: Promulgated in accordance with R.S. 17.7 and R.S. 4002.2-4002.6.

HISTORICAL NOTE: Promulgated by the Board of Elementary and Secondary Education, LR 38:

§503. Course Provider Curriculum

A. All course providers shall:

1. support the state content standards, common core state standards, and CTE course guidelines as applicable;

2. supply course content that is designed to meet the following criteria:

a. based on current perspectives of learning theories and curriculum standards;

b. systematic in design, clearly written and revised based on student performance and feedback;

c. uses appropriate presentation methods, media and pedagogy;

d. engages students in a variety of learning activities based on various learning styles; and

e. accommodates individual differences, including student disabilities;

3. ensure that all course content complies with copyright fair use laws;

4. ensure all students enrolled in a course are provided the necessary course materials related to the course content by the provider;

5. ensure that all courses offered for dual enrollment post-secondary credit meet the standards and grade-level expectations of the high school course for which the student is receiving credit and meet the standards for college credit as established by the Louisiana Board of Regents;

6. ensure that middle school students who are taking high school courses for Carnegie credit meet the standards outline in Bulletin 741, LAC 28:CXV.2321, Carnegie Credit for Middle School Students.

AUTHORITY NOTE: Promulgated in accordance with R.S. 17.7, R.S. 17:24.4, and R.S. 17:4002.2-4002.6.

HISTORICAL NOTE: Promulgated by the Board of Elementary and Secondary Education, LR 38:

§505. Course Provider Instructional Staff

A. All course provider instructional staff must meet the minimum requirements in *Bulletin 746—Louisiana*

Standards for State Certification of School Personnel, or be in compliance with the reciprocal instructor certification policy for instructors who reside in other states but who are employed by authorized course providers to satisfy the state certification requirements pursuant to R.S. 17:7.1.

B. All instructional staff will deliver the courses as approved through the course authorization process and outlined in the approved RFA.

AUTHORITY NOTE: Promulgated in accordance with R.S. 17.7, R.S.17.1, and R.S. 17:4002.4.

HISTORICAL NOTE: Promulgated by the Board of Elementary and Secondary Education, LR 38:

§507. Online Course Providers

A. The online course provider will follow the International Association for K-12 Online Learning (iNACOL) *National Standards for Quality Online Courses.*

B. The course provider will ensure that all instructors are evaluated and delivering instruction in accordance with the iNACOL *National Standards for Quality Online Teaching.*

C. The online course provider will maintain a program that is in alignment with the International Association for K-12 Online Learning (iNACOL) *National Standards for Quality Online Programs*.

D. The provider must have a staff/instructor acceptable use policy for technology that complies with R.S. 17:3996(21).

E. The provider must provide an electronic communication policy that complies with the federal Child Internet Protection Act and R.S. 17:100.7, including information on internet safety practices and policies.

AUTHORITY NOTE: Promulgated in accordance with R.S. 17.7 and R.S. 17:4002.2-4002.6.

HISTORICAL NOTE: Promulgated by the Board of Elementary and Secondary Education, LR 38:

Chapter 7. Local Educational Authority Duties

§701. Local Educational Authority (LEA) Duties

A. Each LEA shall establish policies and procedures whereby for each student identified in R.S. 17:4002.3(2)(a) and (b) and (3)(a) the following shall apply.

1. Credits earned through the course provider shall appear on each such student's official transcript and count fully towards the requirements of any approved Louisiana diploma.

2. Tests required pursuant to R.S. 17:24.4 shall be administered to each such student attending a public school.

3. All services to which each such student attending public school would be entitled if attending the school in which he is enrolled full time for all courses, including but not limited to special education services pursuant to the student's individual education plan, shall be provided.

4. Each LEA that provides transportation for students within their jurisdiction shall also provide students participating in course choice transportation services within the same jurisdiction.

B. Each LEA shall make available to all students the course catalogue as provided by the state board during the annual course enrollment process for that LEA.

C. No LEA shall actively discourage, intimidate, or threaten an eligible funded student or an eligible participating student during the course enrollment process or at any time for that LEA.

D. The aggregate test scores of students identified in R.S. 17:4002.3(2)(a)-(b) and (3)(a) who are enrolled in a course shall be counted in the school performance score for the school in which the student is enrolled full time. The test scores shall be reported to and published by the state Department of Education for each course provider in an easy to understand format and on the department's website.

E. Each student identified in R.S. 17:4002.3(2)(a) and (b) and (3)(a) shall enroll in at least one course at the school in which he/she is enrolled full time.

F. A student can earn an amount in excess of 6 Carnegie units through the Course Choice Program if the total cost for the courses taken do not exceed 5/6 of the 90 percent allocated by the Minimum Foundation Program.

G. Enrollment of children in course work offered by course providers is in compliance with the objectives of Louisiana's compulsory attendance law.

AUTHORITY NOTE: Promulgated in accordance with R.S. 17.7, R.S. 17:24.4, and R.S. 17:4002.2-4002.6.

HISTORICAL NOTE: Promulgated by the Board of Elementary and Secondary Education, LR 38:

§703. Local Education Authority Procedures for Student Enrollment

A. All schools must exercise flexibility in scheduling to accommodate course choice options.

B. If an eligible funded student enrolls in an online course where the course is administered at the school site, the school or LEA shall meet the following requirements related to the online course environment.

1. The school/LEA shall provide students enrolled in online courses technical access which meets specifications furnished by the course provider.

2. The school/LEA shall provide instructional and communication hardware which meets specifications furnished by the course provider.

3. The school/LEA shall provide timely and appropriate technical support.

4. The school/LEA shall award credit and grades for the online courses assigned by the course provider and instructor with no deviations.

5. The school/LEA shall ensure that a facilitator who is a Louisiana licensed teacher or LEA employed paraprofessional is assigned to students to act as a liaison between the provider and the school.

AUTHORITY NOTE: Promulgated in accordance with R.S. 17.7 and R.S.17: 4002.5.

HISTORICAL NOTE: Promulgated by the Department of Education, Board of Elementary and Secondary Education, LR 38:

Chapter 9. Parental/Guardian Duties

§901. Parental/Guardian Duties

A. All parents/guardians shall work in conjunction with the student's school in which they are enrolled to ensure that the student has the necessary course prerequisites for each course taken through the Course Choice Program. Parents/guardians shall also consult with the school to ensure that the student is taking the necessary courses required to meet grade-level promotion or graduation requirements.

B. Parents/Guardians of an eligible participating student (i.e., non-funded students) as outlined in R.S. 17:4002.3(2)(a)(b)(c) are responsible for all tuition costs as

determined by the course provider and outlined in R.S. 17:4002.6 (course provider funding).

C. If a student is taking an online course through the Course Choice Program and elects to take the course offsite, the parent/guardian must:

1. ensure that the student is actively engaged in his/her course on a daily basis;

2. monitor student progress in the course in conjunction with the course provider, and facilitate communication in regards to student progress in the online course;

3. adhere to course provider practices in regards to ethical and legal use of equipment and instructional resources;

4. provide the students enrolled in online courses with technical/Internet access that meet the specifications furnished by the course provider; and

5. provide all equipment necessary for the student in an online course, including, but not limited to, a computer, computer monitor, and printer, if a printer is necessary to participate in the program.

AUTHORITY NOTE: Promulgated in accordance with R.S. 17.7 and R.S. 17: 4002.2-4002.6.

HISTORICAL NOTE: Promulgated by the Board of Elementary and Secondary Education, LR 38:

Chapter 11. Course Choice Program Funding

§1101. Program Funding

A. The following guidelines shall be used to establish funding procedures for the Course Choice Program.

1. The course provider shall receive a course amount for each eligible funded student.

a. For a full Carnegie unit of credit, the provider will receive the amount prescribed in this Section.

b. For a 1/2 unit of credit, the provider will receive half of the amount prescribed in this Section.

c. For a course that results in more than one credit, the course provider tuition payment will be that same multiple of the tuition established for a full credit course (e.g. the course provider of a two credit course will receive two times the tuition payment established for a full credit course).

2. For purposes of this Part, the per course amount means an amount equal to the market rate as determined by the course provider and reported to the state Department of Education up to 1/6 of 90 percent of the per pupil amount each year as determined by the Minimum Foundation Program for the LEA in which the eligible funded student resides. Any remaining funds, except those specified in Paragraph A.3 of this Section, for that student shall be returned to the state or to the LEA according to the pro rata share for the per pupil amount each year as determined by the Minimum Foundation Program for the LEA in which the student resides. Transfers of course payments shall be made by the state Department of Education on behalf of the responsible city or parish school system in which the student resides to the authorized course provider.

3. For each student identified in R.S. 17:4002.3(2)(a) and (b), an amount equal to 10 percent of the per pupil amount according to the pro rata share as determined each year by the Minimum Foundation Program for the LEA in which such student resides shall remain with the LEA in which the eligible funded student is enrolled full time. These funds shall be used to finance any administrative or operational costs (e.g., transportation within LEA, test administration, IEP implementation) to support students enrolled in courses offered by course providers, as determined by BESE.

4. For students identified in R.S. 17:4002.3(2)(c), the course provider shall receive payment only for the courses in which the student is enrolled in accordance with Subsection C of this Section. The remaining funds for each of these students up to the maximum amount for the parish in which the participating student resides as determined each year by the Minimum Foundation Program or actual tuition and fees, as applicable, shall remain with the participating school in which the student is enrolled in accordance with R.S. 17:4011-4025.

B. The course provider may charge tuition to any eligible participating student in an amount equal to the amount determined by the course provider and reported to the state Department of Education in accordance with Paragraph A.2 of this Section. The course provider shall accept the amount specified in Paragraph A.2 of this Section as total tuition and fees for the eligible participating student.

C. The following guidelines shall be used in regards to the payments made to the course provider.

1. Fifty percent of the amount of tuition to be paid or transferred through the Minimum Foundation Program to the course provider shall be paid or transferred upon student enrollment in a course and fifty percent shall be paid or transferred upon course completion according to the published course length.

2. After the initial payment, if a student does not complete a course according to the published course length in which the course provider has received the first payment pursuant to Paragraph 1 of this Subsection, the provider shall receive forty percent of the course amount as defined in Paragraph A.2 of this Section only if the student completes the course and receives credit for the course prior to leaving school pursuant to R.S. 17:221 or graduating from high school pursuant to R.S. 17:24.4.

3. The remaining ten percent of the per pupil amount according to the pro rata share as determined each year by the Minimum Foundation Program for the local public school system in which the eligible funded student resides shall remain with the school in which the eligible funded student is enrolled full time. This shall be in addition to the ten percent specified in Paragraph A.3 of this Section.

AUTHORITY NOTE: Promulgated in accordance with R.S. 17.7 and R.S. 17:4002.6.

HISTORICAL NOTE: Promulgated by the Board of Elementary and Secondary Education, LR 38:

Chapter 13. Provider Evaluation

§1301. Provider Evaluation

A. BESE shall monitor and evaluate the course provider in a manner in which student achievement is the predominant criterion.

1. The initial authorization of the course provider shall be for a period of three years. After the second year of the initial authorization period, the state board shall conduct a thorough review of the course provider's activities and the academic performance of the students enrolled in courses offered by the course provider in accordance with the school and district accountability system. If the performance of the students enrolled in courses offered by the course provider pursuant to the school and district accountability system

does not meet performance standards set by the state board, the state board shall place the course provider on probation.

2. After the initial three-year authorization period, the state board may reauthorize the course provider for additional periods of not less than three years nor more than five years after thorough review of the course provider's activities and the achievement of students enrolled in courses offered by the course provider.

3. Reauthorization and sustained participation in the program relative to student performance will be based on:

a. academic achievement—course providers demonstrate and sustain a proven track record of student success on exams (e.g. EOC, AP, etc.);

b. student career achievement—course providers who support students to achieve rigorous IBCs and/or job placement in their targeted occupation;

c. course pathways—course providers develop a series of thematically-linked course offerings that progressively help students achieve personal academic and/or career goals.

4. Providers must show positive student academic gain with proven assessment methods for each course offering.

Type of Course	Proven Assessment Methods
Core Academic	Standard Louisiana-approved EOC (end-of-course) exams, if available other end-of-course exams tied to applicable Louisiana-approved course guidelines
Career and Technical	Recognized state/ national IBCs (industry-based certifications) based on proven methods Example: NCCER (National Center for Construction Education and Research)
College Credit	Successful AP examination performance Approved assessment method using a proven college-level EOC exam/exercise

AUTHORITY NOTE: Promulgated in accordance with R.S. 17.7 and R.S. 17:4002.6.

HISTORICAL NOTE: Promulgated by the Department of Education, Board of Elementary and Secondary Education, LR 38:

Family Impact Statement

In accordance with Section 953 and 974 of Title 49 of the Louisiana Revised Statutes, there is hereby submitted a Family Impact Statement on the Rule proposed for adoption, repeal or amendment. All Family Impact Statements shall be kept on file in the state board office which has adopted, amended, or repealed a Rule in accordance with the applicable provisions of the law relating to public records.

1. Will the proposed Rule affect the stability of the family? No.

2. Will the proposed Rule affect the authority and rights of parents regarding the education and supervision of their children? No.

3. Will the proposed Rule affect the functioning of the family? No.

4. Will the proposed Rule affect family earnings and family budget? No.

5. Will the proposed Rule affect the behavior and personal responsibility of children? No.

6. Is the family or a local government able to perform the function as contained in the proposed Rule? Yes.

Small Business Statement

The impact of the proposed Rule on small businesses as defined in the Regulatory Flexibility Act has been considered. It is estimated that the proposed action is not expected to have a significant adverse impact on small businesses. The agency, consistent with health, safety, environmental and economic welfare factors has considered and, where possible, utilized regulatory methods in the drafting of the proposed Rule that will accomplish the objectives of applicable statutes while minimizing the adverse impact of the proposed Rule on small businesses.

Public Comments

Interested persons may submit written comments via the U.S. Mail until 4:30 p.m., September 19, 2012, to Nina A. Ford, Board of Elementary and Secondary Education, Box 94064, Capitol Station, Baton Rouge, LA 70804-9064.

Catherine R. Pozniak
Executive Director

FISCAL AND ECONOMIC IMPACT STATEMENT FOR ADMINISTRATIVE RULES
RULE TITLE: Bulletin 132—Louisiana Course Choice Program

I. ESTIMATED IMPLEMENTATION COSTS (SAVINGS) TO STATE OR LOCAL GOVERNMENT UNITS (Summary)

The proposed policy provides rules to govern the implementation of the Louisiana Course Choice Program in accordance with R.S. 17:4002.1-4002.6. The policy establishes the requirements for participating in the Course Choice Program, the principles and requirements of authorizing a course provider, the student funding structure, and the implementation of and enactment of regulatory requirements that must be met in the operation of the Course Choice Program. The policy establishes procedures for monitoring and evaluating course providers, and amending, renewing, and revoking course providers approved by the Board of Elementary and Secondary Education. Costs to the Department of Education for implementing this policy include: student registration system ($2 million), application software ($4,900), and printing ($700). The Department will also hire three salaried employees to implement this policy at a cost of $270,000 for salaries and related benefits. Statutorily dedicated 8(g) Student Enhancement Block Grant funds and self-generated funds will be used for the implementation of the policy.

II. ESTIMATED EFFECT ON REVENUE COLLECTIONS OF STATE OR LOCAL GOVERNMENTAL UNITS (Summary)

This policy will have no effect on revenue collections.

III. ESTIMATED COSTS AND/OR ECONOMIC BENEFITS TO DIRECTLY AFFECTED PERSONS OR NONGOVERNMENTAL GROUPS (Summary)

There will be no cost to students/parents who enroll in courses offered by a course provider if the student attends a school labeled “C”, “D”, or “F”, the student attends a public school that does not offer the course, or a student is a state scholarship recipient (eligible funded students). Minimum Foundation Program funding allocated to local education agencies in which the student is enrolled full time will be redirected to the authorized course provider for eligible funded students. Eligible participating students, i.e. students at “A” or “B” schools where the course is offered, students at BESE approved nonpublic schools, and students enrolled in a BESE

approved home study program, may enroll in courses for a tuition equal to the amount charged for eligible funded students.

IV. ESTIMATED EFFECT ON COMPETITION AND EMPLOYMENT (Summary)

Students will have the flexibility to choose courses outside of those offered at their school which may affect competition between course providers and public schools. This may result in a reduction of the number of employees for local education agencies depending on the number of students participating in the program.

Beth Scioneaux	Evan Brasseaux
Deputy Superintendent	Staff Director
1208#040	Legislative Fiscal Office

NOTICE OF INTENT

Board of Elementary and Secondary Education

Bulletin 133—Scholarship Programs
(LAC 28: CLIII.101, 301, 303, 501, 701, 901, and 1101)

In accordance with R.S. 49:950 et seq., the Administrative Procedure Act, notice is hereby given that the Board of Elementary and Secondary Education approved for advertisement the creation of *Bulletin 133—Scholarship Programs:* §101. Definitions, §301. School Registration Process, §303. Student Enrollment Process, §501. Finance, §701. Required Participation in the State Testing Program, §901. Continued Eligibility, §1101. Reporting. The proposed policy will give greater definition to Act 2 of the 2012 legislative session, which expanded the Student Scholarships for Educational Excellence Program's availability to students attending C, D, and F schools statewide.

Title 28
EDUCATION
Part CLIII. Bulletin 133—Scholarship Programs
Chapter 1. General Provisions
§101. Definitions

Department—the state Department of Education.

Eligible Nonpublic School—a non-public school that meets the following criteria:

1. is approved, provisionally approved, or probationally approved by the state Board of Elementary and Secondary Education pursuant to R.S. 17:11; and

2. is approved according to Brumfield, et al. v. Dodd, et al. 425 F. Supp. 528.

Eligible Public School—a public school with a letter grade of "A" or "B", or any variation thereof, for the most recent school year a letter grade is available, pursuant to the school and district accountability system.

Eligible Student—a student who resides in Louisiana, is a member of a family with a total income that does not exceed two hundred fifty percent of the current federal poverty guidelines as established by the federal office of management and budget, and who meets any one of the following criteria:

1. is entering kindergarten and has enrolled in the local school system in which the public school he/she would have otherwise attended is located or in a school under the jurisdiction of the Recovery School District; or

2. was enrolled in a public school in Louisiana on October first and on February first of the most recent school year pursuant to the definition of student membership established by the state board for purposes of the Minimum Foundation Program formula, and such school received a letter grade of "C", "D", or "F" or any variation thereof, for the most recent year a letter grade is available, pursuant to the school and district accountability system; or

3. received a scholarship pursuant to this Program in the previous school year.

Fees—standard educational fees that are charged to all students at a participating school.

Participating School—a school that meets program requirements and seeks to enroll scholarship recipients pursuant to this Chapter or a public school that meets program requirements and seeks to enroll scholarship recipients pursuant to this Chapter subject to any court-ordered desegregation plan in effect for the school system in which the public school is located.

Program—the Student Scholarships for Educational Excellence Program.

Scholarship Recipient—an eligible student who is awarded a scholarship pursuant to this Program.

Transfer—a change in enrollment status resulting from the movement of an eligible student from one participating school to another participating school during the current school year.

AUTHORITY NOTE: Promulgated in accordance with R.S.17:6 and R.S. 17:4025.

HISTORICAL NOTE: Promulgated by the Board of Elementary and Secondary Education, LR: 38

Chapter 3. Registration
§301. School Registration Process

A. In administering the school registration process for the program, the department shall:

1. receive an annual notice of intent from eligible public and eligible nonpublic schools seeking to participate in the program;

2. establish and publish a timeline for the submission of notices of intent from eligible schools seeking to participate in the program; and

3. establish an internal review process for determining initial and continuing school eligibility, including assessment of whether a school meets the criteria for participation as determined by the department and, as needed, additional site visits, audits, and assessments of compliance with applicable health and safety regulations. Guidance on the criteria for participation shall be published annually by the department.

B. Participating schools shall:

1. submit an annual notice of intent with the following information:

a. the number of available seats per grade. Enrollment of scholarship recipients in a participating school that has been approved, provisionally approved, or probationally approved for less than two years shall not exceed 20 percent of the school's total student enrollment.

b. whether the school elects to offer an enrollment preference to a student based on the parish in which the student resides;

c. any other information requested by the department;

d. for eligible nonpublic schools:

i. if a nonpublic school elects to provide special education services, the school must provide information

regarding special education services it is able to and shall provide, the services the local school system is able to and shall provide, and the services the local school system currently provides to children with special needs as defined in R.S. 17:1942;

ii. schools charging tuition must include the maximum amount of tuition, including all allowable fees;

iii. tuition and fees may not be higher than those charged to non-scholarship students;

e. for eligible public schools, the notice of intent must be submitted by the principal of the school with the approval of the local superintendent. The local school board shall delegate the authority to participate in the program to the local superintendent.

AUTHORITY NOTE: Promulgated in accordance with R.S.17:6 and R.S. 17:4025.

HISTORICAL NOTE: Promulgated by the Board of Elementary and Secondary Education, LR 38:

§303. Student Enrollment Process

A. In administering the program, the department shall:

1. determine student eligibility for scholarships;

2. accept applications from parents or legal guardians of eligible students which indicate the parent or legal guardian's choice(s) of participating schools;

3. process applications from students:

a. in the event there are more eligible students who submit applications than there are available seats at participating schools for any grade, the department shall conduct a random selection process to award scholarships that provides each eligible student an equal opportunity for selection based on students' indicated preferences;

b. only after each student who attended or otherwise would be attending a public school that received a letter grade of "D" or "F" or any variation thereof has been placed at a participating school which the parent or legal guardian indicated as a choice on the eligible student's application shall a student who attended a public school that received a letter grade of "C" or any variation thereof be entered into the random selection process. At such time, each student who attended or otherwise would be attending a public school that received a letter grade of "C" or any variation thereof shall be provided an equal opportunity for selection into that particular school;

c. the department may give preference to the following:

i. siblings of students already enrolled in the participating school;

ii. students enrolled in the Nonpublic School Early Childhood Development Program at the participating school;

iii. participating students transferring from an ineligible school; and

iv. students residing in the parishes as indicated pursuant to the notice of intent, if applicable;

d. for the purposes of the random selection process, twins, triplets, quadruplets, and other such multiple births shall constitute one individual;

4. notify parents or legal guardians of eligible students who applied for scholarships whether they have been awarded a scholarship and placed at a particular participating school;

5. notify participating schools of the roster of students assigned through the program;

6. the department will remit scholarship payments to participating schools on behalf of a scholarship recipient. See Chapter 5 of this Bulletin for more details;

B. Parent/Legal Guardian Obligations

1. Once students are notified of their scholarship award to a participating school, their parents or legal guardians shall have fourteen days to notify the participating school of their intention to enroll their student.

2. If a scholarship recipient enrolled in a participating nonpublic school would have been entitled to receive special education services in the public school he would otherwise be attending, his parent or legal guardian shall acknowledge in writing, as part of the enrollment process that the parent or legal guardian agrees to accept only such services as are available to all students enrolled in the nonpublic school.

3. Enrollment of a scholarship recipient in a participating school constitutes acceptance of any such rules, policies, and procedures of such school, including but not limited to academic policies, disciplinary rules, and procedures of the school.

C. LEA Obligations

1. Each local school system shall conduct its annual kindergarten enrollment process in accordance with the department's timeline and shall report such enrollment to the department prior to the program enrollment process.

2. Each local school system shall include and identify scholarship recipients in its student information system, as determined by the department.

D. Participating School Obligations

1. Participating schools shall:

a. not discriminate against a child with special educational needs during the program admissions process. However, a participating nonpublic school is required to offer only those services that it already provides or such services as necessary to assist students with special needs that it can provide with minor adjustments;

b. provide assistance with the student application process, as determined by the department;

c. provide an assurance to the department accepting responsibility for costs associated with any participating students enrolled who are found to be ineligible to participate in the program;

d. inform the parent or legal guardian of a scholarship recipient of any and all rules, policies, and procedures of such school, including but not limited to academic policies, disciplinary rules, and procedures of the school. Furthermore, the parent/legal guardian shall acknowledge, in writing, the policies, rules, and procedures that have been provided.

AUTHORITY NOTE: Promulgated in accordance with R.S.17:6 and R.S. 17:4025.

HISTORICAL NOTE: Promulgated by the Board of Elementary and Secondary Education, LR 38:

Chapter 5. Finance

§501. Finance

A. The state board shall allocate annually from the minimum foundation program an amount per pupil to each participating school equal to the amount allocated per pupil to the local school system in which the scholarship recipient resides, considering all student characteristics.

1. This amount shall be counted toward the equitable allocation of funds appropriated to parish and city school

systems as provided in Article VIII, Section 13(B) of the Constitution of Louisiana.

B. For a participating school that charges tuition, if the maximum amount of tuition plus incidental or supplementary fees that are charged to non-scholarship students enrolled in such school and any costs incurred in administering the tests required pursuant to R.S. 17:4023 is less than the amount allocated per pupil to the local school system in which the student resides, any remaining funds shall be returned to the state or to the local school system in which the scholarship recipient attended or otherwise would be attending public school for that year according to the pro rata share for the per pupil amount each year as determined by the minimum foundation program for the local school system in which the scholarship recipient attended or otherwise would be attending public school for that year.

C. The maximum amount of tuition and fees to be paid for scholarship students including annual increases shall be determined as follows.

1. When tuition and fees for participating nonpublic schools are increased, payments for scholarship students shall be determined as follows:

a. if tuition and fees were at or above two-thirds of the MFP per pupil amount for the district in which the school is located, then the department shall not pay more than a 5 percent annual increase for participating scholarship students at the school; and

b. if tuition and fees were below two-thirds of the MFP per pupil amount for the district in which the school is located, then the department shall not pay more than two-thirds of the MFP per pupil amount for the district in which the school is located or a 5 percent annual increase for participating schools, whichever is higher;

c. once tuition and fees are equal to or greater than the MFP per pupil amount for the district in which the school is located, then the payment to the nonpublic school shall be no greater than the MFP per pupil for the district in which the school is located. The nonpublic school may continue to increase tuition and fees for privately-funded students.

D. Attendance of students in a participating school must be supported by appropriate documentation of daily attendance, either written or electronic, to include dates of absences.

E. The amount to be paid for a scholarship shall be divided into four equal payments to be made to each participating school in September, December, February, and May of each school year.

1. Payments shall be based on per pupil count dates as determined by the department. No refunds shall be made to the department or to the parent or legal guardian if the scholarship recipient withdraws from the program or is otherwise not enrolled prior to the next count date. The school in which the scholarship recipient is enrolled on the next count date shall receive the next payment.

2. The audit must be conducted after the February payment and transmitted to the department on or before May 1.

3. If the audit yields a finding regarding tuition and fees or attendance, payment adjustments will be made to the May payment.

F. If a participating nonpublic school charges a higher tuition for students receiving special education services and meets the criteria set forth below, the state shall allocate from the minimum foundation program an amount per pupil to each participating nonpublic school equal to a special education tuition amount based on the cost of providing special education services identified for that student to the participating nonpublic school. This amount shall be in addition to the participating nonpublic schools' maximum scholarship payment, but the total of the payment and the special education tuition shall not exceed the amount allocated for that student to the local school system if the student otherwise would be attending public school.

1. Only a participating non-public school meeting the criteria below shall be allowed to charge a higher tuition for scholarship recipients receiving special education services:

a. for at least two years, the participating non-public school has provided needed educational services to students with exceptionalities, as defined in R.S. 17:1942, excluding students deemed to be gifted or talented; and

b. the participating non-public school has provided needed services to students by teachers holding appropriate special education certification or other appropriate education and training as defined in Bulletin 1706; and

c. the participating non-public school provides services and instruction in accordance with a student's individual education plan and/or services plan.

G. A participating non-public school shall submit to the department an independent financial audit of the school conducted by a certified public accountant who has been approved by the legislative auditor.

1. Such audit shall be accompanied by the auditor's statement that the report is free of material misstatements and fairly presents the participating school's maximum tuition or actual cost of educating a student pursuant to R.S. 17:4016.

2. The audit shall be limited in scope to those records necessary for the department to make scholarship payments to the participating school and shall be submitted to the legislative auditor for review and investigation of any irregularities or audit findings.

3. The participating school shall return to the state any funds that the legislative auditor determines were expended in a manner inconsistent with state law or program regulations.

4. The participating school shall pay the cost of such audit unless funds are appropriated by the legislature for such purpose, in which case the department shall pay the cost of such audit.

H. The department shall receive independent financial audits from participating nonpublic schools as required in §501.E.

1. The department shall place any participating school that fails to comply with the audit provisions pursuant to R.S. 17:4022(3) on probation for a period of one year during which such school shall not be permitted to enroll additional scholarship recipients.

2. If such school is not in full compliance by the end of the one-year probationary period, the school shall be ineligible to participate in the program until such time as the

department has determined that the school is in full compliance.

AUTHORITY NOTE: Promulgated in accordance with R.S.17:6 and R.S. 17:4025.

HISTORICAL NOTE: Promulgated by the Board of Elementary and Secondary Education, LR 38:

Chapter 7. Testing

§701. Required Participation in the State Testing Program

A. Scholarship recipients attending participating public schools shall participate in the state assessment program as outlined in Bulletin 118.

B. Nonpublic Schools

1. Participating nonpublic schools shall administer all state assessments that are subject to the Louisiana School and District Accountability System to their eligible student with nonpublic school staff in the school setting.

2. The participating nonpublic school will develop and submit to the department annually a test security policy in compliance with Bulletin 118, Chapter 3 approved by its board. After review of the test security policy by the department, the participating nonpublic school may be required to make revisions and resubmit.

3. Participating nonpublic schools shall follow BESE's test security policy as stated in Bulletin 118.

4. The participating nonpublic school shall name a school test coordinator for the school and provide contact information to the department.

a. The school test coordinator for the participating nonpublic school shall attend the pretest workshop designed for the participating nonpublic schools as well as any additional training required to administer the state tests.

b. All designated school test coordinators are required to provide the department with a valid work email address. Personal email addresses (Yahoo!, Hotmail, Google, etc.) will not be accepted.

c. When the school test coordinator changes, the participating nonpublic school shall provide the name and contact information of the new school test coordinator to the department on school letterhead within 15 days of the change in appointment.

5. The participating nonpublic school shall be responsible for all required accountability and demographic coding of testing documents.

6. The participating nonpublic school shall investigate and report any testing irregularities and/or violations of test security to the department. In addition, the department has the authority to conduct an investigation and void any scores deemed to be invalid.

7. The department staff shall have the authority to:

a. monitor the implementation of the state testing;

b. require changes to the testing plan as deemed necessary; and

c. conduct site visits during testing.

8. The department staff shall:

a. notify participating nonpublic schools of any new requirements in state testing; and

b. evaluate annually the testing plan to ensure full compliance with policies and procedures.

9. The local school district shall not test any students enrolled in participating nonpublic schools unless there is a written agreement between the local school district and the participating nonpublic school to this effect. No local school district shall ever be required to test students attending the participating nonpublic schools under the scholarship program.

AUTHORITY NOTE: Promulgated in accordance with R.S.17:6 and R.S. 17:4025.

HISTORICAL NOTE: Promulgated by the Board of Elementary and Secondary Education, LR 38:

Chapter 9. Continued Eligibility

§901. Continued Eligibility

A. For continued eligibility in the scholarship program, participating schools must:

1. use an open admissions process in enrolling scholarship recipients in the program;

2. within ten business days of the first day of school as determined by the participating school, notify the department of scholarship recipients enrolled;

3. comply with all testing requirements listed in Chapter 7;

4. accept the scholarship amount as full payment of all educational costs, including all fees;

5. prior to enrollment, inform the parent or legal guardian of a scholarship recipient of any and all rules, policies, and procedures of the school, including but not limited to academic policies, disciplinary rules, and procedures of the school;

6. submit an annual independent financial audit as described in Chapter 5;

7. notify the department of any expulsion within two days; and

8. meet the criteria for participation as determined by the department and, as needed, additional site visits, audits, and assessments of compliance with applicable health and safety regulations.

B. If a school elects to withdraw from the scholarship program or to no longer accept new students, it shall notify the department on a timeline established by the department.

1. If a school notifies the department that it will no longer participate in the program after the established deadline for continuing school participation in the program, the department may disallow the school from participating in the program for up to five academic years.

2. Schools electing to no longer accept new students from the scholarship program may continue to receive scholarship payments for all continuing students.

C. If a school withdraws from or becomes ineligible to participate in the scholarship program in the middle of a school year, it shall allow all enrolled scholarship recipients to remain at the school for the remainder of the school year and shall pay for the educational services for those students.

D. The department shall assist any scholarship recipient attending a school that is ineligible to participate in the program in transferring to another participating school, provided such school has sufficient capacity at the appropriate grade level.

E. If enrolled in a participating school that fails to meet eligibility criteria established in this Bulletin, then scholarship recipients may transfer to another participating school for the succeeding school year without loss of eligibility, and such recipients shall be given preference for enrollment at other participating schools.

AUTHORITY NOTE: Promulgated in accordance with R.S.17:6 and R.S. 17:4025.

HISTORICAL NOTE: Promulgated by the Board of Elementary and Secondary Education, LR 38:

Chapter 11. Reporting

§1101. Reporting

A. The department shall annually report to the Senate Committee on Education, the House Committee on Education, and the Joint Legislative Committee on the Budget regarding the implementation of the program, including:

1. the number of eligible students receiving scholarships;

2. a list of participating schools and the number of scholarship recipients each such school enrolled; and

3. aggregate test result data for the scholarship recipients enrolled in each participating school.

B. The department shall annually publish the following information for all schools participating in the program:

1. the most recent aggregate average proficiency rates on state assessments for scholarship recipients enrolled at each participating school;

2. a list of all public schools with a letter grade of "C", "D", or "F", or any variation thereof;

3. the rate at which scholarship recipients finish the highest grade level offered at a participating school, by entering cohort;

4. the retention rate for scholarship recipients;

5. the percentage of parents or legal guardians of scholarship recipients who are satisfied with the participating school; and

6. the rate at which all participating schools admit and serve students with special education needs.

AUTHORITY NOTE: Promulgated in accordance with R.S.17:6 and R.S. 17:4025.

HISTORICAL NOTE: Promulgated by the Board of Elementary and Secondary Education, LR 38:

Family Impact Statement

In accordance with Section 953 and 974 of Title 49 of the Louisiana Revised Statutes, there is hereby submitted a Family Impact Statement on the rule proposed for adoption, repeal or amendment. All Family Impact Statements shall be kept on file in the State Board Office which has adopted, amended, or repealed a rule in accordance with the applicable provisions of the law relating to public records.

Please respond to the following:

1. Will the proposed Rule affect the stability of the family? No

2. Will the proposed rule affect the authority and rights or parents regarding the education and supervision of their children? No

3. Will the proposed rule affect the functioning of the family? No.

4. Will the proposed rule affect family earnings and family budget? No.

5. Will the proposed rule affect the behavior and personal responsibility of children? No.

6. Is the family or a local government able to perform the function as contained in the proposed rule? No.

Small Business Statement

The impact of the proposed Rule on small businesses as defined in the Regulatory Flexibility Act has been considered. It is estimated that the proposed action is not expected to have a significant adverse impact on small businesses. The agency, consistent with health, safety, environmental and economic welfare factors has considered and, where possible, utilized regulatory methods in the drafting of the proposed rule that will accomplish the objectives of applicable statutes while minimizing the adverse impact of the proposed rule on small businesses.

Public Comments

Interested persons may submit written comments via the U.S. Mail until 4:30 p.m., September 19, 2012, to: Nina A. Ford, State Board of Elementary and Secondary Education, P.O. Box 94064, Capitol Station, Baton Rouge, LA 70804-9064.

Catherine R. Pozniak
Executive Director

FISCAL AND ECONOMIC IMPACT STATEMENT FOR ADMINISTRATIVE RULES
RULE TITLE: Bulletin 133—Scholarship Programs

I. ESTIMATED IMPLEMENTATION COSTS (SAVINGS) TO STATE OR LOCAL GOVERNMENT UNITS (Summary)

The proposed policy revision will ensure that continued implementation of the Student Scholarships for Educational Excellence will be aligned with Act 2 of the 2012 Louisiana legislature. The adoption of this policy will cost the Department of Education approximately $700 (printing and postage) to disseminate the policy.

In addition, the Board of Elementary and Secondary Education will annually allocate from the Minimum Foundation Program (MFP) formula an amount per pupil to each participating school equal to the amount allocated per pupil to the local school system in which the scholarship recipient resides. If the participating school charges tuition and the maximum amount of tuition and fees is less than the amount allocated per pupil to the local school system in which the student resides any remaining funds shall be returned to the state or local school system in which the scholarship recipient attended or would otherwise be attending for that year. The amount of the returned funds will correlate to the pro rata share for the per pupil amount each year as determined by the MFP for the local school system.

II. ESTIMATED EFFECT ON REVENUE COLLECTIONS OF STATE OR LOCAL GOVERNMENTAL UNITS (Summary)

This policy will have no effect on revenue collections.

III. ESTIMATED COSTS AND/OR ECONOMIC BENEFITS TO DIRECTLY AFFECTED PERSONS OR NONGOVERNMENTAL GROUPS (Summary)

Certain Louisiana students and employees of schools participating in the Student Scholarships for Educational Excellence will be directly affected by the proposed action. No significant costs or economic benefits are expected.

IV. ESTIMATED EFFECT ON COMPETITION AND EMPLOYMENT (Summary)

This policy will increase competition in the elementary and secondary education model. Students and families unsatisfied with the education they are receiving at their public school will have the ability to use their MFP allocation to attend a participating nonpublic or high achieving public school.

Beth Scioneaux	H. Gordon Monk
Deputy Superintendent	Legislative Fiscal Officer
1208#039	Legislative Fiscal Office

NOTICE OF INTENT

Board of Elementary and Secondary Education

Bulletin 741—Louisiana Handbook for School Administrators—Carnegie Credit for Middle School Students (LAC 28: CXV.2321)

In accordance with R.S. 49:950 et seq., the Administrative Procedure Act, notice is hereby given that the Board of Elementary and Secondary Education approved for advertisement revisions to *Bulletin 741—Louisiana Handbook for School Administrators:* §2321. Credit Recovery. This revision removes the requirement that middle school students taking a high school course from a teacher who is not certified must pass a credit exam approved by the state department to earn Carnegie credit in the course. This change was recommended by some schools and districts because the current policy places a requirement on middle school students that is not required of high school students taking the same course.

Title 28
EDUCATION
Part CXV. Bulletin 741—Louisiana Handbook for School Administrators
Chapter 23. Curriculum and Instruction
§2321. Carnegie Credit for Middle School Students

A. - B. …

C. Middle school students may receive Carnegie credit for successfully completing the high school course provided that:

1. the time requirement for the awarding of Carnegie credit is met (§907);
2. the student has mastered the established high school course standards for the course taken.

D. - F.1. …

AUTHORITY NOTE: Promulgated in accordance with R.S. 17:7; R.S. 17:24.4.

HISTORICAL NOTE: Promulgated by the Board of Elementary and Secondary Education, LR 31:1293 (June 2005), amended LR 33:430 (March 2007), LR 33:2601 (December 2007), LR 34:609 (April 2008), LR 34:2031 (October 2008), LR 35:443 (March 2009), LR 35:2319 (November 2009), repromulgated LR 36:59 (January 2010), amended LR 36:2260 (October 2010), LR 37:2129 (July 2011), LR 37:3199 (November 2011), LR 38:

Family Impact Statement

In accordance with Section 953 and 974 of Title 49 of the Louisiana Revised Statutes, there is hereby submitted a Family Impact Statement on the Rule proposed for adoption, repeal or amendment. All Family Impact Statements shall be kept on file in the state board office which has adopted, amended, or repealed a Rule in accordance with the applicable provisions of the law relating to public records.

1. Will the proposed Rule affect the stability of the family? No.
2. Will the proposed Rule affect the authority and rights of parents regarding the education and supervision of their children? No.
3. Will the proposed Rule affect the functioning of the family? No.
4. Will the proposed Rule affect family earnings and family budget? No.
5. Will the proposed Rule affect the behavior and personal responsibility of children? No.
6. Is the family or a local government able to perform the function as contained in the proposed Rule? Yes.

Small Business Statement

The impact of the proposed Rule on small businesses as defined in the Regulatory Flexibility Act has been considered. It is estimated that the proposed action is not expected to have a significant adverse impact on small businesses. The agency, consistent with health, safety, environmental and economic welfare factors has considered and, where possible, utilized regulatory methods in the drafting of the proposed Rule that will accomplish the objectives of applicable statutes while minimizing the adverse impact of the proposed Rule on small businesses.

Public Comments

Interested persons may submit written comments via the U.S. Mail until 4:30 p.m., September 19, 2012 to Nina A. Ford, State Board of Elementary and Secondary Education, P.O. Box 94064, Capitol Station, Baton Rouge, LA 70804-9064.

Catherine R. Pozniak
Executive Director

FISCAL AND ECONOMIC IMPACT STATEMENT FOR ADMINISTRATIVE RULES

RULE TITLE: Bulletin 741—Louisiana Handbook for School Administrators—Carnegie Credit for Middle School Students

I. ESTIMATED IMPLEMENTATION COSTS (SAVINGS) TO STATE OR LOCAL GOVERNMENT UNITS (Summary)

The revision to Section 2321 of *Bulletin 741: Louisiana Handbook for School Administrators* removes the requirement that middle school students taking a high school course from a teacher who is not certified must pass a credit exam approved by the state department to earn Carnegie credit in the course. This change will not result in an increase in costs or savings to state or local governmental units.

II. ESTIMATED EFFECT ON REVENUE COLLECTIONS OF STATE OR LOCAL GOVERNMENTAL UNITS (Summary)

There will be no effect on revenue collections of state or local governmental units.

III. ESTIMATED COSTS AND/OR ECONOMIC BENEFITS TO DIRECTLY AFFECTED PERSONS OR NONGOVERNMENTAL GROUPS (Summary)

There will be no costs or economic benefits to directly affected persons or non-governmental groups.

IV. ESTIMATED EFFECT ON COMPETITION AND EMPLOYMENT (Summary)

There will be no effect on competition and employment.

Beth Scioneaux
Deputy Superintendent
1208#037

H. Gordon Monk
Legislative Fiscal Officer
Legislative Fiscal Office

NOTICE OF INTENT

Board of Elementary and Secondary Education

Bulletin 741—Louisiana Handbook for School Administrators—Connections Process
(LAC 28:CXV.2907)

In accordance with R.S. 49:950 et seq., the Administrative Procedure Act, notice is hereby given that the Board of Elementary and Secondary Education approved for advertisement revisions to *Bulletin 741—The Louisiana Handbook for School Administrators*: §2907. Connection Process. *Connections* is a one year process for overage students to receive targeted instruction and accelerated remediation. The Connections Process will include the following elements: academic and behavioral interventions; mentoring; job skills training; TABE locator and battery assessments; committee reviews; parent meetings; individual prescriptions for instruction; individual graduation plans; and exiting pathways (High School Diploma via Accelerated Pathway: Core or Career Diploma; GED Pathway; State-approved Skills Certificate). Students on the High School Diploma and GED pathways may also work towards Industry Based Certification. This action is to revise *Bulletin 741—Louisiana Handbook for School Administrators:* §2907, in order to amend policy regarding the newly developed Connections Process. There is no federal regulation attached to this action.

Title 28
EDUCATION
Part CXV. Bulletin 741—Louisiana Handbook for School Administrators
Chapter 29. Alternative Schools and Programs
§2907. Connections Process

A. The Connections Process replaces Louisiana's PreGED/Skills Option Program. Connections is a one year process for overage students to receive targeted instruction and accelerated remediation aimed at attaining a high school diploma, high school equivalency diploma (by passage of GED tests), or state-approved skills certificate. The process includes a connections profile to track the following elements: academic and behavioral interventions; mentoring; job skills training; TABE locator and battery assessments; committee reviews; parent meetings; individual prescriptions for instruction; individual graduation plans; and exiting pathways. While in the Connections Process, students are 8th graders and therefore shall take required 8th grade courses per Bulletin 741. Students can move from any middle school grade into the Connections Process provided they meet the criteria below.

NOTE: Refer to high stakes testing policy in *Bulletin 1566—Pupil Progression Policies and Procedures*. Requirements differ for initial 8th grade students and students repeating the 8th grade (see Bulletin 741, §2321).

B. ...

1. Students shall be 15 years of age during the school year and two years behind their peers academically to enter the Connections Process.

B.2. - E. ...

AUTHORITY NOTE: Promulgated in accordance with R.S. 17:100.5.

HISTORICAL NOTE: Promulgated by the Board of Elementary and Secondary Education, LR 31:1308 (June 2005), amended LR 34:2032 (October 2008), LR 37:2131 (July 2011), LR 38:1000 (April 2012), LR 38:

Family Impact Statement

In accordance with Section 953 and 974 of Title 49 of the Louisiana Revised Statutes, there is hereby submitted a Family Impact Statement on the Rule proposed for adoption, repeal or amendment. All Family Impact Statements shall be kept on file in the state board office which has adopted, amended, or repealed a Rule in accordance with the applicable provisions of the law relating to public records.

1. Will the proposed Rule affect the stability of the family? No.
2. Will the proposed Rule affect the authority and rights of parents regarding the education and supervision of their children? No.
3. Will the proposed Rule affect the functioning of the family? No.
4. Will the proposed Rule affect family earnings and family budget? No.
5. Will the proposed Rule affect the behavior and personal responsibility of children? No.
6. Is the family or a local government able to perform the function as contained in the proposed Rule? No.

Small Business Statement

The impact of the proposed Rule on small businesses as defined in the Regulatory Flexibility Act has been considered. It is estimated that the proposed action is not expected to have a significant adverse impact on small businesses. The agency, consistent with health, safety, environmental and economic welfare factors has considered and, where possible, utilized regulatory methods in the drafting of the proposed Rule that will accomplish the objectives of applicable statutes while minimizing the adverse impact of the proposed Rule on small businesses.

Public Comments

Interested persons may submit written comments via the U.S. Mail until 4:30 p.m., September 19, 2012, to Nina A. Ford, Board of Elementary and Secondary Education, Box 94064, Capitol Station, Baton Rouge, LA 70804-9064.

Catherine R. Pozniak
Executive Director

FISCAL AND ECONOMIC IMPACT STATEMENT FOR ADMINISTRATIVE RULES

RULE TITLE: Bulletin 741—Louisiana Handbook for School Administrators—Connections Process

I. ESTIMATED IMPLEMENTATION COSTS (SAVINGS) TO STATE OR LOCAL GOVERNMENT UNITS (Summary)

The Department of Education recommends relevant policy revisions to *Bulletin 741: Louisiana Handbook for School Administrators* as they relate to the *Connections Process*. There will be no costs to state or local governmental units as a result of this policy change. The Louisiana Department of Education anticipates the costs for the Local Education Agencies to operate the Connections Process will be similar to the costs incurred in operating the former Pre-GED Skills/Options Program.

II. ESTIMATED EFFECT ON REVENUE COLLECTIONS OF STATE OR LOCAL GOVERNMENTAL UNITS (Summary)

There is no effect on revenue collections of state or local governmental units.

III. ESTIMATED COSTS AND/OR ECONOMIC BENEFITS TO DIRECTLY AFFECTED PERSONS OR NONGOVERNMENTAL GROUPS (Summary)

There will be no estimated cost and/or economic benefit to directly affected persons or non-governmental groups.

IV. ESTIMATED EFFECT ON COMPETITION AND EMPLOYMENT (Summary)

There will be no effect on competition and employment.

Beth Scioneaux	H. Gordon Monk
Deputy Superintendent	Legislative Fiscal Officer
1208#033	Legislative Fiscal Office

NOTICE OF INTENT

Board of Elementary and Secondary Education

Bulletin 741—Louisiana Handbook for School Administrators—Credit Recovery (LAC 28:CXV.2324)

In accordance with R.S. 49:950 et seq., the Administrative Procedure Act, notice is hereby given that the Board of Elementary and Secondary Education approved for advertisement revisions to *Bulletin 741—Louisiana Handbook for School Administrators:* §2324. Credit Recovery. This revision removes the requirement that students earning credit through credit recovery must be taught using a state-approved credit recovery program or must pass a comprehensive exam approved by the department of education. This change will provide districts and schools with more flexibility and authority for selection and evaluation of curricular materials and the determination of student credit.

Title 28
EDUCATION
Part CXV. Bulletin 741—Louisiana Handbook for School Administrators
Chapter 23. Curriculum and Instruction
§2324. Credit Recovery

A. - B.4.a. …

AUTHORITY NOTE: Promulgated in accordance with R.S. 17:7; R.S. 17:24.4.

HISTORICAL NOTE: Promulgated by the Board of Elementary and Secondary Education, LR 33:2352 (November 2007), amended LR 38:

Family Impact Statement

In accordance with Section 953 and 974 of Title 49 of the Louisiana Revised Statutes, there is hereby submitted a Family Impact Statement on the Rule proposed for adoption, repeal or amendment. All Family Impact Statements shall be kept on file in the state board office which has adopted, amended, or repealed a Rule in accordance with the applicable provisions of the law relating to public records.

1. Will the proposed Rule affect the stability of the family? No.
2. Will the proposed Rule affect the authority and rights of parents regarding the education and supervision of their children? No.
3. Will the proposed Rule affect the functioning of the family? No.
4. Will the proposed Rule affect family earnings and family budget? No.
5. Will the proposed Rule affect the behavior and personal responsibility of children? No.
6. Is the family or a local government able to perform the function as contained in the proposed Rule? Yes.

Small Business Statement

The impact of the proposed Rule on small businesses as defined in the Regulatory Flexibility Act has been considered. It is estimated that the proposed action is not expected to have a significant adverse impact on small businesses. The agency, consistent with health, safety, environmental and economic welfare factors has considered and, where possible, utilized regulatory methods in the drafting of the proposed Rule that will accomplish the objectives of applicable statutes while minimizing the adverse impact of the proposed rule on small businesses.

Public Comments

Interested persons may submit written comments via the U.S. Mail until 4:30 p.m., September 19, 2012 to Nina A. Ford, State Board of Elementary and Secondary Education, P.O. Box 94064, Capitol Station, Baton Rouge, LA 70804-9064.

Catherine R. Pozniak
Executive Director

FISCAL AND ECONOMIC IMPACT STATEMENT FOR ADMINISTRATIVE RULES
RULE TITLE: Bulletin 741—Louisiana Handbook for School Administrators—Credit Recovery

I. ESTIMATED IMPLEMENTATION COSTS (SAVINGS) TO STATE OR LOCAL GOVERNMENT UNITS (Summary)

The revision to Section 2324 of *Bulletin 741: Louisiana Handbook for School Administrators* removes the requirement that students earning credit through credit recovery must be taught using a state-approved credit recovery program or must pass a comprehensive exam approved by the Department of Education. This change will not result in an increase in costs or savings to state or local governmental units.

II. ESTIMATED EFFECT ON REVENUE COLLECTIONS OF STATE OR LOCAL GOVERNMENTAL UNITS (Summary)

There will be no effect on revenue collections of state or local governmental units.

III. ESTIMATED COSTS AND/OR ECONOMIC BENEFITS TO DIRECTLY AFFECTED PERSONS OR NONGOVERNMENTAL GROUPS (Summary)

There will be no costs or economic benefits to directly affected persons or non-governmental groups.

IV. ESTIMATED EFFECT ON COMPETITION AND EMPLOYMENT (Summary)

There will be no effect on competition and employment.

Beth Scioneaux	Gregory V. Albrecht
Deputy Superintendent	Chief Economist
1208#036	Legislative Fiscal Office

NOTICE OF INTENT

Board of Elementary and Secondary Education

Bulletin 741—Louisiana Handbook for School Administrators—Distance Education (LAC 28:CXV.2395)

In accordance with R.S. 49:950 et seq., the Administrative Procedure Act, notice is hereby given that the Board of Elementary and Secondary Education approved for advertisement revisions to *Bulletin 741—The Louisiana Handbook for School Administrators*: §2395. Distance

Education. The proposed policy revisions require course providers to align instruction and assessment to reflect Louisiana Core Standards and Common Core State Standards when applicable, and allow an "LEA employed paraprofessional" to serve as an online course facilitator. The revisions further remove the requirement that the provider furnish training and/or support in designing course content to fit the delivery methods proposed for distance education courses.

Title 28
EDUCATION
Part CXV. Bulletin 741—Louisiana Handbook for School Administrators
Chapter 23. Curriculum and Instruction
§2395. Distance Education

A. - A.3.g. …

h. The provider shall ensure that teachers delivering instruction in distance education courses use a variety of methods to assess the mastery of the content as reflected in the Louisiana content standards and aligned with common core state standards where applicable.

3.i. - 4.a. …

b. The receiving LEA or school shall ensure that a facilitator who is a Louisiana licensed teacher or LEA employed paraprofessional is assigned to and is actively engaged with each student participating in distance education courses.

4.c. - 5.e. …

AUTHORITY NOTE: Promulgated in accordance with R.S. 17:7; R.S. 17:24.4; R.S. 17:183.3.

HISTORICAL NOTE: Promulgated by the Board of Elementary and Secondary Education, LR 31:1302 (June 2005), amended LR 33:2051 (October 2007), LR 38:

Family Impact Statement

In accordance with Section 953 and 974 of Title 49 of the Louisiana Revised Statutes, there is hereby submitted a Family Impact Statement on the Rule proposed for adoption, repeal or amendment. All Family Impact Statements shall be kept on file in the state board office which has adopted, amended, or repealed a Rule in accordance with the applicable provisions of the law relating to public records.

1. Will the proposed Rule affect the stability of the family? No.
2. Will the proposed Rule affect the authority and rights of parents regarding the education and supervision of their children? No.
3. Will the proposed Rule affect the functioning of the family? No.
4. Will the proposed Rule affect family earnings and family budget? No.
5. Will the proposed Rule affect the behavior and personal responsibility of children? No.
6. Is the family or a local government able to perform the function as contained in the proposed Rule? No.

Small Business Statement

The impact of the proposed Rule on small businesses as defined in the Regulatory Flexibility Act has been considered. It is estimated that the proposed action is not expected to have a significant adverse impact on small businesses. The agency, consistent with health, safety, environmental and economic welfare factors has considered and, where possible, utilized regulatory methods in the drafting of the proposed Rule that will accomplish the objectives of applicable statutes while minimizing the adverse impact of the proposed Rule on small businesses.

Public Comments

Interested persons may submit written comments via the U.S. Mail until 4:30 p.m., September 19, 2012, to Nina A. Ford, Board of Elementary and Secondary Education, Box 94064, Capitol Station, Baton Rouge, LA 70804-90

Catherine R. Pozniak
Executive Director

FISCAL AND ECONOMIC IMPACT STATEMENT FOR ADMINISTRATIVE RULES
RULE TITLE: Bulletin 741—Louisiana Handbook for School Administrators—Distance Education

I. ESTIMATED IMPLEMENTATION COSTS (SAVINGS) TO STATE OR LOCAL GOVERNMENT UNITS (Summary)

The adoption of this policy will cost the Department of Education approximately $200 (printing and postage) to disseminate the policy. The policy revision provides for the following**:**

Allows an "LEA employed paraprofessional" to serve as an online course facilitator which may reduce cost for LEAs.

Removes requirement that the provider furnish training and/or support in designing course content to fit the delivery methods proposed for distance education courses.

Requires provider to align instruction and assessment to reflect Louisiana Content Standards and Common Core State Standards when applicable.

II. ESTIMATED EFFECT ON REVENUE COLLECTIONS OF STATE OR LOCAL GOVERNMENTAL UNITS (Summary)

This policy will have no effect on revenue collections.

III. ESTIMATED COSTS AND/OR ECONOMIC BENEFITS TO DIRECTLY AFFECTED PERSONS OR NONGOVERNMENTAL GROUPS (Summary)

There will be no estimated cost and/or economic benefit to directly affected persons or non-governmental groups.

IV. ESTIMATED EFFECT ON COMPETITION AND EMPLOYMENT (Summary)

This policy may increase competition between paraprofessionals and certified teachers for employment as online facilitators.

Beth Scioneaux	H. Gordon Monk
Deputy Superintendent	Legislative Fiscal Officer
1208#034	Legislative Fiscal Office

NOTICE OF INTENT

Board of Elementary and Secondary Education

Bulletin 741—Louisiana Handbook for School Administrators—General Career and Technical Education (LAC 28:CXV.2377)

In accordance with R.S. 49:950 et seq., the Administrative Procedure Act, notice is hereby given that the Board of Elementary and Secondary Education approved for advertisement revisions to Bulletin 741—The Louisiana Handbook for School Administrators: §2377. General Career and Technical Education. The proposed policy revisions reflect the addition of courses that have been developed to address the needs of the local school systems, business, and

industry and will enable districts to offer students a wider range of courses to enable students to complete a career pathway.

Title 28
EDUCATION
Part CXV. Bulletin 741—Louisiana Handbook for School Administrators
Chapter 23. Curriculum and Instruction
§2377. General Career and Technical Education

A. General career and technical education course offerings shall be as follows.

Course Title(s)	Recommended Grade Level	Units
Assistive Technology for the Visually Impaired	9-12	1
Business Enterprises for the Visually Impaired	12	1
Braille I	9-12	1
Braille II	9-12	1
CTE Internship I	11-12	1
CTE Internship II	12	1
CTE Internship I	11-12	2
CTE Internship II	12	2
Consumer Finance and Banking	12	1
General Cooperative Education I	11-12	3
General Cooperative Education II	12	3
Education for Careers	9-12	1/2-1
Advanced Television Broadcasting I	10-12	1-3
Advanced Television Broadcasting II	11-12	1-3
Digital Media I	10-12	1-3
Digital Media II	11-12	1-3
STAR I	11-12	1
STAR II	12	1
Entrepreneurship	11-12	1
Journey to Careers	9	1/2-1
Oracle Internet Academy		
Database Design and Programming	11-12	1
Database Programming with PL/SQL	11-12	1
Finance Academy		
Business Economics	11-12	1/2
Financial Services	11-12	1/2
Financial Planning	11-12	1/2
Ethics in Business	11-12	1/2
Insurance	11-12	1/2
Business in a Global Economy	11-12	1/2
Principles of Finance	11-12	1/2 – 1
Principles of Accounting	11-12	1/2
Managerial Accounting	11-12	1/2
Advanced Finance	11-12	1/2
Hospitality and Tourism Academy		
Principles of Hospitality and Tourism	11-12	1/2
Customer Service	11-12	1/2
Sports Entertainment and Event Management	11-12	1/2
Geography and World Cultures	11-12	1/2
Sustainable Tourism	11-12	1/2
Hospitality Marketing	11-12	1/2
Information Technology Academy		
Principles of Information Technology	11-12	1/2
Computer Networking	11-12	1/2
Web Design	11-12	1/2
Databases Design	11-12	1/2
Computer Systems	11-12	1/2
Introduction to Programming	11-12	1/2
Digital Video	11-12	1/2

B. …

AUTHORITY NOTE: Promulgated in accordance with R.S. 17:7 and R.S. 17:24.4.

HISTORICAL NOTE: Promulgated by the Board of Elementary and Secondary Education, LR 31:1299 (June 2005), amended LR 32:546 (April 2006), LR 32:1415 (August 2006) LR 33:278 (February 2007), LR 33:2050 (October 2007), LR 34:1386 (July 2008), LR 34:2558 (December 2008), LR 35:1229 (July 2009), LR 35:2319 (November 2009), LR 35:2748 (December 2009), LR 36:1496 (July 2010), LR 36:1997 (September 2010), LR 38:

Family Impact Statement

In accordance with Section 953 and 974 of Title 49 of the Louisiana Revised Statutes, there is hereby submitted a Family Impact Statement on the Rule proposed for adoption, repeal or amendment. All Family Impact Statements shall be kept on file in the state board office which has adopted, amended, or repealed a Rule in accordance with the applicable provisions of the law relating to public records.

1. Will the proposed Rule affect the stability of the family? No.
2. Will the proposed Rule affect the authority and rights of parents regarding the education and supervision of their children? No.
3. Will the proposed Rule affect the functioning of the family? No.
4. Will the proposed Rule affect family earnings and family budget? No.
5. Will the proposed Rule affect the behavior and personal responsibility of children? No.
6. Is the family or a local government able to perform the function as contained in the proposed Rule? No.

Small Business Statement

The impact of the proposed Rule on small businesses as defined in the Regulatory Flexibility Act has been considered. It is estimated that the proposed action is not expected to have a significant adverse impact on small businesses. The agency, consistent with health, safety, environmental and economic welfare factors has considered and, where possible, utilized regulatory methods in the drafting of the proposed Rule that will accomplish the objectives of applicable statutes while minimizing the adverse impact of the proposed Rule on small businesses.

Public Comments

Interested persons may submit written comments via the U.S. Mail until 4:30 p.m., September 19, 2012, to Nina A. Ford, Board of Elementary and Secondary Education, Box 94064, Capitol Station, Baton Rouge, LA 70804-9064.

Catherine R. Pozniak
Executive Director

FISCAL AND ECONOMIC IMPACT STATEMENT FOR ADMINISTRATIVE RULES
RULE TITLE: Bulletin 741—Louisiana Handbook for School Administrators
General Career and Technical Education

I. ESTIMATED IMPLEMENTATION COSTS (SAVINGS) TO STATE OR LOCAL GOVERNMENT UNITS (Summary)

The proposed policy will provide for the addition of four new Career and Technical Education course offerings. The adoption of this policy will cost the Department of Education

approximately $200 (printing and postage) to disseminate the policy.

II. ESTIMATED EFFECT ON REVENUE COLLECTIONS OF STATE OR LOCAL GOVERNMENTAL UNITS (Summary)

This policy will have no effect on revenue collections.

III. ESTIMATED COSTS AND/OR ECONOMIC BENEFITS TO DIRECTLY AFFECTED PERSONS OR NONGOVERNMENTAL GROUPS (Summary)

There will be no estimated cost and/or economic benefit to directly affected persons or non-governmental groups.

IV. ESTIMATED EFFECT ON COMPETITION AND EMPLOYMENT (Summary)

This policy will have no effect on competition and employment.

Beth Scioneaux
Deputy Superintendent
1208#035

Gregory V. Albrecht
Chief Economist
Legislative Fiscal Office

NOTICE OF INTENT

Board of Elementary and Secondary Education

Bulletin 741—Louisiana Handbook for School Administrators—School Food Service (LAC 28:CXV.2103)

In accordance with R.S. 49:950 et seq., the Administrative Procedure Act, notice is hereby given that the Board of Elementary and Secondary Education approved for advertisement the amendment of *Bulletin 741—Louisiana Handbook for School Administrators:* §2103. The proposed policy amendment will update the bulletin language to properly reference state and federal laws, federal regulations and federal policies as the authority under which the Louisiana Child Nutrition Programs will operate.

Title 28
EDUCATION
Part CXV. Bulletin 741—Louisiana Handbook for School Administrators
Chapter 21. Support Services
§2103. School Food Service

A. …

B. Reimbursement payment shall be made only to schools operating under an agreement between the LEA or other governing authority and the DOE.

1. Agreements shall be signed by the designated representative of each LEA or other governing authority.

C. Participating schools shall adhere to conditions of Agreement and all applicable federal and state laws and United States Department of Agriculture (USDA) regulations and policies governing the USDA Child Nutrition Programs under the DOE.

AUTHORITY NOTE: Promulgated in accordance with R.S. 17: 82; R.S. 17: 191 et seq.

HISTORICAL NOTE: Promulgated by the Board of Elementary and Secondary Education, LR 31:1287 (June 2005), amended LR 38:

Family Impact Statement

In accordance with Section 953 and 974 of Title 49 of the Louisiana Revised Statutes, there is hereby submitted a Family Impact Statement on the Rule proposed for adoption, repeal or amendment. All Family Impact Statements shall be kept on file in the state board office which has adopted, amended, or repealed a Rule in accordance with the applicable provisions of the law relating to public records.

1. Will the proposed Rule affect the stability of the family? No.

2. Will the proposed Rule affect the authority and rights of parents regarding the education and supervision of their children? No.

3. Will the proposed Rule affect the functioning of the family? No.

4. Will the proposed Rule affect family earnings and family budget? No.

5. Will the proposed Rule affect the behavior and personal responsibility of children? No.

6. Is the family or a local government able to perform the function as contained in the proposed Rule? No.

Small Business Statement

The impact of the proposed Rule on small businesses as defined in the Regulatory Flexibility Act has been considered. It is estimated that the proposed action is not expected to have a significant adverse impact on small businesses. The agency, consistent with health, safety, environmental and economic welfare factors has considered and, where possible, utilized regulatory methods in the drafting of the proposed Rule that will accomplish the objectives of applicable statutes while minimizing the adverse impact of the proposed Rule on small businesses.

Public Comments

Interested persons may submit written comments via the U.S. Mail until 4:30 p.m., September 19, 2012, to Nina A. Ford, State Board of Elementary and Secondary Education, P.O. Box 94064, Capitol Station, Baton Rouge, LA 70804-9064.

Catherine R. Pozniak
Executive Director

FISCAL AND ECONOMIC IMPACT STATEMENT FOR ADMINISTRATIVE RULES

RULE TITLE: Bulletin 741—Louisiana Handbook for School Administrators—School Food Service

I. ESTIMATED IMPLEMENTATION COSTS (SAVINGS) TO STATE OR LOCAL GOVERNMENT UNITS (Summary)

The proposed policy amendment will update the bulletin language to properly reference State and Federal laws, federal regulations and federal policies as the authority under which the Louisiana Child Nutrition Programs will operate. The proposed amendment of this bulletin will not cause any notable expense to the Department of Education.

II. ESTIMATED EFFECT ON REVENUE COLLECTIONS OF STATE OR LOCAL GOVERNMENTAL UNITS (Summary)

The amendment of this bulletin will have no effect on revenue collections.

III. ESTIMATED COSTS AND/OR ECONOMIC BENEFITS TO DIRECTLY AFFECTED PERSONS OR NONGOVERNMENTAL GROUPS (Summary)

The amendment of this bulletin will have no effect on costs, and or economic benefit to directly affected person or non-governmental groups.

IV. ESTIMATED EFFECT ON COMPETITION AND EMPLOYMENT (Summary)

The amendment of this bulletin will have no effect on competition and employment.

Beth Scioneaux
Deputy Superintendent
1208#038

Gregory V. Albrecht
Chief Economist
Legislative Fiscal Office

NOTICE OF INTENT

Board of Elementary and Secondary Education

Bulletin 746—Louisiana Standards for State Certification of School Personnel (LAC 28:CXXXI. 307, 343, 345, 346, 347, 504, 507, 509, 701, 703, 705, 707, 709, 710, 711, 723, 725, 803, 901, 908, and 910)

In accordance with R.S. 49:950 et seq., the Administrative Procedure Act, notice is hereby given that the Board of Elementary and Secondary Education approved for advertisement revisions to *Bulletin 746—Louisiana Standards for State Certification of School Personnel:* §307. Type C Certificates, §343. Artist or Talented Certificate, §345. Nonpublic Montessori Teacher Certificate, §346. Family and Consumer Sciences (Occupational Programs), §347. Junior Reserve Officers Training Corps Instructor (ROTC), §504 Career and Technical Certificate Types Issued after July 1, 2006, §507. VTIE, CTTIE, and CTTIE-1 Certificate Renewal Guidelines, §509. CTTIE-2 Certificate Renewal Guidelines, §701. Overview, §703. Introduction, §705. Educational Leader Certificate Level 1 (EDL1), §707. Educational Leader Certificate Level 2 (EDL2), §709. Educational Leader Certificate Level 3 (EDL3), §710. Turnaround Specialists Certificate (TSC), §711. Teacher Leader Endorsement (Optional), §723. Out-of-State Principal Level 2 (OSP2), §725. Out-of-State Superintendent (OSS), §803. Appeal Process, §901. Overview, §908. Suspension and Revocation of Certificate/Endorsement Due to Facilitation of Cheating, and §910. Suspension and Non-Renewal of Certificate/Endorsement Due to Ineffectiveness. The proposed policy revisions align the certification of school personnel with Act 54 of the 2010 Regular Legislative Session. The proposed revisions will require that ancillary teachers, career trade and technical and industrial personnel, and educational leaders meet the standards of effectiveness mandated by Act 54 in order to obtain a higher level certificate or to renew a certificate. The revision in policy will also prohibit an individual who has not met the standards of effectiveness to appeal to the Teacher Certification Appeals Counsel for certification. This policy will also allow the suspension and revocation of a teaching certificate due to facilitation of cheating and will also allow the suspension of a certificate for a teacher who has received three years of ineffective teaching. During the 2010 Regular Legislative Session new regulations were passed for the evaluation of teachers in all public school systems.

Title 28
EDUCATION
Part CXXXI. Bulletin 746—Louisiana Standards for State Certification of School Personnel
Chapter 3. Teaching Authorizations and Certifications
Subchapter A. Standard Teaching Authorizations
§307. Type C Certificates

A. Effective July 1, 2002, Type C certificates are no longer issued for initial certification. The Type C certificate is valid for three years. Teachers who hold Type B and Type A lifetime certificates will continue to hold these certificates. Effective July 1, 2012, Type B and Type A lifetime certificates will no longer be issued to teachers holding Type C certificates applying for advanced certificates. Teachers holding a Type C certificate who wish to apply for more advanced certification credentials will be granted a Level 2 certificate, upon meeting the standards of effectiveness for at least three years, pursuant to Bulletin 130 and R.S.17:3902.

B. Type C Certificate

B.1. - E.3. …

AUTHORITY NOTE: Promulgated in accordance with R.S. 17:6 (A)(10), (11), (15); R.S. 17:7(6); R.S. 17:10; R.S. 17:22(6); R.S. 17:391.1-391.10; R.S. 17:411.

HISTORICAL NOTE: Promulgated by the Board of Elementary and Secondary Education, LR 32:1798 (October 2006), amended LR 37:559 (February 2011), LR 38:

Subchapter C. Ancillary Teaching Certificates
§343. Artist or Talented Certificate

A. ...

B. Artists Certificate (Art, Creative Writing, Drama, Dance, Music, Theatre, Visual Arts)

1. - 3.b. ...

4. Renewal Guidelines—valid for five years initially and may be renewed thereafter for a period of five years at the request of an LEA. For renewal of the Ancillary certificate, candidates must successfully meet the standards of effectiveness for at least three years during the initial certification or renewal period pursuant to Bulletin 130 and R.S.17:3902. If the holder of this certificate changes school systems, the LEA must request a change of job assignment.

5. The person holding such certification is not eligible for tenure.

C. Talented Certificate (Music, Theatre, or Visual Arts)

1. - 3.c. ...

4. Renewal Guidelines—valid for five years initially and may be renewed thereafter for a period of five years at the request of an LEA. For renewal of the Ancillary certificate, candidates must successfully meet the standards of effectiveness for at least three years during the initial certification or renewal period pursuant to Bulletin 130 and R.S.17:3902. If the holder of this certificate changes school systems, the LEA must request a change of job assignment.

5. ...

AUTHORITY NOTE: Promulgated in accordance with R.S. 17:6 (A)(10), (11), (15); R.S. 17:7(6); R.S. 17:10; R.S. 17:22(6); R.S. 17:391.1-391.10; R.S. 17:411.

HISTORICAL NOTE: Promulgated by the Board of Elementary and Secondary Education, LR 32:1805 (October 2006), amended LR 38:

§345. Nonpublic Montessori Teacher Certificate

A. Nonpublic Montessori Teacher Certificate

B. - C.3.c.vii. ...

D. This certificate is valid for five years initially and may be renewed thereafter for a period of five years at the request of a LEA. For renewal of the ancillary certificate, candidates must successfully meet the standards of effectiveness for at least three years during the five-year initial or renewal period pursuant to Bulletin 130 and R.S.17:3902.

E. The certificate lapses for disuse if the holder allows a period of five consecutive calendar years to pass in which he/she is not a regularly employed teacher for at least one

semester, or 90 consecutive days. To reinstate a lapsed certificate, the holder must present evidence that he/she earned six semester hours of credit in state-approved courses (see Chapter 13) during the five year period immediately preceding request for reinstatement.

AUTHORITY NOTE: Promulgated in accordance with R.S. 17:6 (A)(10), (11), (15); R.S. 17:7(6); R.S. 17:10; R.S. 17:22(6); R.S. 17:391.1-391.10; R.S. 17:411.

HISTORICAL NOTE: Promulgated by the Board of Elementary and Secondary Education, LR 32:1805 (October 2006), amended LR 38:

§346. Family and Consumer Sciences (Occupational Programs)

A. - B.1.c. ...

2. Renewal Guidelines. Valid for five years initially and may be renewed thereafter for a period of five years at the request of an LEA. For renewal of the Ancillary certificate, candidates must successfully meet the standards of effectiveness for at least three years during initial or renewal period pursuant to Bulletin 130 and R.S.17:3902.

C. Qualified Certification—valid for five years.

1. Eligibility requirements:

a. completed requirements for provisional certification; and

b. three years of teaching experience in Family and Consumer Sciences occupational programs.

2. Renewal Guidelines. Valid for five years initially and may be renewed thereafter for a period of five years at the request of an LEA. For renewal of the Ancillary certificate, candidates must successfully meet the standards of effectiveness for at least three years during initial or renewal period pursuant to Bulletin 130 and R.S.17:3902.

3. Reinstatement Guidelines. Reinstatement of a lapsed certificate: If the certificate holder allows a period of five consecutive calendar years to pass in which he/she is not a regularly employed teacher for at least one semester (90 consecutive days), the certificate lapses for disuse. To reinstate a lapsed certificate, the holder must present evidence that he/she earned six semester hours of credit in state-approved courses during the five year period immediately preceding request for reinstatement (see Chapter 13).

AUTHORITY NOTE: Promulgated in accordance with R.S. 17:6 (A)(10), (11), (15); R.S. 17:7(6); R.S. 17:10; R.S. 17:22(6); R.S. 17:391.1-391.10; R.S. 17:411.

HISTORICAL NOTE: Promulgated by the Board of Elementary and Secondary Education, LR 32:1806 (October 2006), amended LR 38:

§347. Junior Reserve Officers Training Corps Instructor (ROTC)

A. - A.1.b.

2. Renewal Guidelines—valid for five years initially and may be renewed thereafter for a period of five years at the request of an LEA. For renewal of the Ancillary certificate, candidates must successfully meet the standards of effectiveness for at least three years during initial or renewal period pursuant to Bulletin 130 and R.S.17:3902.

AUTHORITY NOTE: Promulgated in accordance with R.S. 17:6 (A)(10), (11), (15); R.S. 17:7(6); R.S. 17:10; R.S. 17:22(6); R.S. 17:391.1-391.10; R.S. 17:411.

HISTORICAL NOTE: Promulgated by the Board of Elementary and Secondary Education, LR 34:432 (March 2008), amended LR 34:1610 (August 2008), LR 38:

Chapter 5. Standards for Secondary Career and Technical Trade and Industrial Education Personnel

§504. Career and Technical Certificate Types Issued after July 1, 2006

1. CTTIE-1 Certificate—valid for one year; renewable for a maximum of five years while holder completes required coursework. Candidates must successfully meet the standards of effectiveness for the renewal of this certificate pursuant to Bulletin 130 and R.S.17:3902.

2. CTTIE-2 Certificate—valid for five years initially and may be renewed thereafter for a period of five years at the request of an LEA. For renewal of the CTTIE-2 certificate, candidates must successfully meet the standards of effectiveness for at least three years during the five-year initial or renewal period pursuant to Bulletin 130 and R.S.17:3902. To qualify for this certificate, an individual must meet requirements for a CTTIE-1 certificate and have earned the appropriate CTTIE coursework.

AUTHORITY NOTE: Promulgated in accordance with R.S. 17:6 (A)(10), (11), (15); R.S. 17:7(6); R.S. 17:10; R.S. 17:22(6); R.S. 17:391.1-391.10; R.S. 17:411.

HISTORICAL NOTE: Promulgated by the Board of Elementary and Secondary Education, LR 35:2752 (December 2009), amended LR 38:

§507. VTIE, CTTIE, and CTTIE-1 Certificates Renewal Guidelines

A. - A.6. ...

a. Renewal Guidelines—valid for five years initially and may be renewed thereafter for a period of five years at the request of an LEA. For renewal of the CTTIE-2 certificate, candidates must successfully meet the standards of effectiveness for at least three years during the five-year initial or renewal period pursuant to Bulletin 130 and R.S.17:3902.

B. - D. ...

AUTHORITY NOTE: Promulgated in accordance with R.S. 17:6 (A)(10), (11), (15); R.S. 17:7(6); R.S. 17:10; R.S. 17:22(6); R.S. 17:391.1-391.10; R.S. 17:411.

HISTORICAL NOTE: Promulgated by the Board of Elementary and Secondary Education, LR 32:1814 (October 2006), amended LR 33:2356 (November 2007), LR 35:2753 (December 2009), LR 36:2000 (September 2010), LR 38:

§509. CTTIE-2 Certificates Renewal Guidelines

A. Renewal Guidelines—valid for five years initially and may be renewed thereafter for a period of five years at the request of an LEA. For renewal of the CTTIE-2 certificate, candidates must successfully meet the standards of effectiveness for at least three years during the five-year initial or renewal period pursuant to Bulletin 130 and R.S.17:3902.

B. ...

AUTHORITY NOTE: Promulgated in accordance with R.S. 17:6 (A)(10), (11), (15); R.S. 17:7(6); R.S. 17:10; R.S. 17:22(6); R.S. 17:391.1-391.10; R.S. 17:411.

HISTORICAL NOTE: Promulgated by the Board of Elementary and Secondary Education, LR 32:1814 (October 2006), amended LR 35:2754 (December 2009), LR 38:

Chapter 7. Administrative and Supervisory Credentials

§701. Overview

A. An individual who serves as an administrator and/or supervisor in Louisiana schools is required to obtain the appropriate credential for the area of assignment. A teacher already certified in Louisiana can have an Educational Leader certificate issued to provide administrative or supervisory services in a Louisiana school system.

B. - B.3. ...

AUTHORITY NOTE: Promulgated in accordance with R.S. 17:6 (A)(10), (11), (15); R.S. 17:7(6); R.S. 17:10; R.S. 17:22(6); R.S. 17:391.1-391.10; R.S. 17:411.

HISTORICAL NOTE: Promulgated by the Board of Elementary and Secondary Education, LR 32:1822 (October 2006), amended LR 38:

Subchapter A. The Educational Leadership Certificate

§703. Introduction

A. The Educational Leadership Certification structure provides for four levels of leader certification: Teacher Leader; Educational Leader Level 1; Educational Leader Level 2; and Educational Leader Level 3. The Teacher Leader Certificate is an option for a teacher to be identified as a teacher leader; it is not a state required credential for a specific administrative position. The Educational Leader Level 1 certificate is an entry-level certificate for individuals seeking to qualify for school and/or district leadership positions (e.g., assistant principals, principals, parish or city supervisors of instruction, supervisors of child welfare and attendance, special education supervisors, or comparable school/district leader positions). An individual moves from a Level 1 to a Level 2 certificate after completion of the Educational Leader (District) Induction Program, successfully meeting standards of effectiveness for three years pursuant to Bulletin 130 and R.S.17:3902, and completing the required years of experience. The Level 3 certificate qualifies an individual for employment as a district superintendent.

B. Educational leadership preparation programs and induction programs are aligned with the following state and national standards:

1. - 3. ...

AUTHORITY NOTE: Promulgated in accordance with R.S. 17:6 (A)(10), (11), (15); R.S. 17:7(6); R.S. 17:10; R.S. 17:22(6); R.S. 17:391.1-391.10; R.S. 17:411.

HISTORICAL NOTE: Promulgated by the Board of Elementary and Secondary Education, LR 32:1822 (October 2006), amended LR 33:819 (May 2007,. LR 38:

§705. Educational Leader Certificate Level 1 (EDL 1)

A. This is the certificate needed by those who fill school and district educational leadership positions (e.g., assistant principal, principal, parish or city supervisor of instruction, supervisor of child welfare and attendance, special education supervisor, or comparable school/district leader positions). This certificate is issued upon the request of the LEA once the individual is hired to serve as an Educational Leader. An Educational Leader Certificate Level 1 may be obtained through either a master's degree pathway or through one of three alternate pathways.

1. Master's Degree Pathway. To receive an entry-level EDL 1, the candidate must:

a. - c. ...

2. Alternate Pathway 1. The Alternate Pathway 1 is for persons who already hold a master's degree and are seeking to receive an EDL 1. The candidate must:

a - d. ...

3. Alternate Pathway 2. The Alternate Pathway 2 is for persons who already hold a master's degree in education and are seeking to receive an EDL 1. The candidate must:

a. - d. ...

4. Alternate Pathway 3. The Alternate Pathway 3 is for persons who already hold a baccalaureate degree from a regionally accredited institution of higher education and are seeking to receive an EDL 1 through a competency-based educational leader practitioner (residency) program (See Chapter 2, §240). The candidate must:

a. - d. ...

5. EDL 1 Extensions/Renewals

a. An EDL 1 is valid for three years initially and may be extended thereafter for a period of one year at the request of an LEA. EDL 1 certificates are limited to two such extensions.

b. Individuals who hold an Educational Leader add-on endorsement issued prior to July 1, 2012 and are employed in a leadership capacity will be required to meet the standards of effectiveness pursuant to Bulletin 130 and R.S.17:3902 for three years out of the five year renewal period in order to renew their endorsement.

6. Upon employment as a school/district educational leader, an individual with an EDL1 certificate must enroll in the state-approved Educational Leader Induction Program under the direction of the Louisiana Department of Education prior to July 1, 2011 or the district-administered educational leadership induction program after July 1, 2011. Once employed as a school/district educational leader, the individual has three years to complete the induction program.

AUTHORITY NOTE: Promulgated in accordance with R.S. 17:6 (A)(10), (11), (15); R.S. 17:7(6); R.S. 17:10; R.S. 17:22(6); R.S. 17:391.1-391.10; R.S. 17:411.

HISTORICAL NOTE: Promulgated by the Board of Elementary and Secondary Education, LR 32:1823 (October 2006), amended LR 33:819 (May 2007), LR 38:

§707. Educational Leader Certificate Level 2 (EDL 2)

A. To receive an EDL 2, the individual must:

1. hold a valid EDL 1 certificate, Louisiana provisional principal certification, or comparable level out-of-state educational leader certificate;

2. have three years of teaching experience in his/her area(s) of certification;

3. have completed the Educational Leader Induction Program under the administration of the Louisiana Department of Education prior to July 1, 2011 or the district-administered educational leadership induction program after July 1, 2011:

a. the induction period begins immediately upon the candidate's first full-time administrative appointment (permanent or acting) as an assistant principal, principal, parish or city supervisor of instruction, supervisor of child welfare and attendance, or comparable school/district leader position;

b. the induction program must be completed within a three-year period;

4. meet the standards of effectiveness as an Educational Leader for three years pursuant to Bulletin 130 and R.S.17:3902.

B. Renewal Requirements. An EDL 2 is valid for five years initially and may be extended thereafter for a period of five years at the request of an LEA. For renewal of EDL 2 certificate, candidates must successfully meet the standards of effectiveness for at least three years during the five-year initial or renewal period pursuant to Bulletin 130 and R.S.17:3902.

1. Individuals who hold an Educational Leader add-on endorsement issued prior to July 1, 2012 and are employed in a leadership capacity will be required to meet the standards of effectiveness pursuant to Bulletin 130 and R.S.17:3902 for three years out of the five year renewal period in order to renew their endorsement.

AUTHORITY NOTE: Promulgated in accordance with R.S. 17:6 (A)(10), (11), (15); R.S. 17:7(6); R.S. 17:10; R.S. 17:22(6); R.S. 17:391.1-391.10; R.S. 17:411.

HISTORICAL NOTE: Promulgated by the Board of Elementary and Secondary Education, LR 32:1823 (October 2006), amended LR 33:820 (May 2007), LR 38:

§709. Educational Leader Certificate Level 3 (EDL 3)

A. This certificate is required in order to serve as a school system superintendent or assistant superintendent.

1. Eligibility requirements:

a. valid EDL 2 or one of the Louisiana administrative/supervisory certifications that preceded the Educational Leadership Certification structure;

b. - d. ...

2. Renewal Requirements. An EDL 3 is valid for five years initially and may be extended thereafter for a period of five years at the request of an LEA. For renewal of an EDL 3 certificate, candidates must successfully meet the standards of effectiveness for at least three years during the five-year initial or renewal period pursuant to Bulletin 130 and R.S.17:3902.

3. Individuals who hold an Educational Leader add-on endorsement issued prior to July 1, 2012 and are employed in a leadership capacity will be required to meet the standards of effectiveness pursuant to Bulletin 130 and R.S.17:3902 for three years out of the five year renewal period in order to renew their endorsement.

AUTHORITY NOTE: Promulgated in accordance with R.S. 17:6 (A)(10), (11), (15); R.S. 17:7(6); R.S. 17:10; R.S. 17:22(6); R.S. 17:391.1-391.10; R.S. 17:411.

HISTORICAL NOTE: Promulgated by the Board of Elementary and Secondary Education, LR 32:1824 (October 2006), amended LR 38:

§710. Turnaround Specialist Certificate (TSC)

A. The Louisiana School Turnaround Specialist Program (LSTS) is a leadership development program designed to strengthen the organizational and instructional leadership skills of currently certified and experienced principals to prepare them to lead low-performing schools to higher student achievement.

1. To receive a TSC the individual must meet all of the following requirements:

a. hold a valid Level 2, Level 3, Type B, Type A, or out-of-state (OS) teaching certificate with three years of teaching in the certified area and certification as an elementary/secondary principal, principal, or educational leader;

b. - c. ...

2. Renewal Requirements. A TSC is valid for five years initially and may be extended thereafter for a period of five years at the request of an LEA. For renewal of a TSC certificate, candidates must successfully meet the standards of effectiveness for at least three years during the five-year initial or renewal period pursuant to Bulletin 130 and R.S.17:3902.

3. Individuals who hold an Educational Leader add-on endorsement issued prior to July 1, 2012 and are employed in a leadership capacity will be required to meet the standards of effectiveness pursuant to Bulletin 130 and R.S.17:3902 for three years out of the five year renewal period in order to renew their endorsement.

AUTHORITY NOTE: Promulgated in accordance with R.S. 17:6 (A)(10), (11), (15); R.S. 17:7(6); R.S. 17:10; R.S. 17:22(6); R.S. 17:391.1-391.10; R.S. 17:411.

HISTORICAL NOTE: Promulgated by the Board of Elementary and Secondary Education, LR 35:645 (April 2009), LR amended 38:

§711. Teacher Leader Endorsement (Optional)

A. As part of the educational leader certification structure, there is an option for a teacher to become certified as a teacher leader. This optional endorsement allows principals the opportunity to afford leadership experiences to teachers at the school level and recruit potential educational leader candidates for their school districts. Teacher Leader is the certification authorization needed by those who fill school site leadership roles (e.g., serving as a school curriculum coordinator, chairperson or content teacher, serving as the School Improvement Team Chairperson, serving as the lead teacher in developing and scheduling a special activity at the school site, serving as the lead teacher in the school's preparation for a technical assistance visit etc.).

B. - B.2.d. ...

AUTHORITY NOTE: Promulgated in accordance with R.S. 17:6 (A)(10), (11), (15); R.S. 17:7(6); R.S. 17:10; R.S. 17:22(6); R.S. 17:391.1-391.10; R.S. 17:411.

HISTORICAL NOTE: Promulgated by the Board of Elementary and Secondary Education, LR 32:1824 (October 2006), amended LR 35:1232 (July 2009), LR 38:

Subchapter B. Out-of-State Administrative Certification Structure

§723. Out-of-State Principal Level 2 (OSP2)

A. An Out-of-State Principal Level 2 (OSP2) is valid for five years initially and may be extended thereafter for a period of five years at the request of an LEA.

1. - 1.c....

d. successfully meeting the standards of effectiveness as an educational leader during the validity period of the OSP1 certificate.

2. Renewal Requirements. For renewal of OSP2 certificate, candidates must successfully meet the standards of effectiveness for at least three years during the five-year initial or renewal period pursuant to Bulletin 130 and R.S.17:3902.

AUTHORITY NOTE: Promulgated in accordance with R.S. 17:6(A)(10), (11), (15); R.S. 17:7(6); R.S. 17:10; R.S. 17:22(6); R.S. 17:391.1-391.10, and R.S. 17:411

HISTORICAL NOTE: Promulgated by the Board of Elementary and Secondary Education, LR 32:1825 (October 2006), amended LR 35:2325 (November 2009), LR 36:882 (March 2011), LR 38:

§725. Out-of-State Superintendent (OSS)

A. - A.1.e. ...

2. Renewal Requirements. For renewal of an OSS certificate, candidates must successfully meet the standards of effectiveness for at least three years during the five-year initial or renewal period pursuant to Bulletin 130 and R.S.17:3902.

AUTHORITY NOTE: Promulgated in accordance with R.S. 17:6 (A)(10), (11), (15); R.S. 17:7(6); R.S. 17:10; R.S. 17:22(6); R.S. 17:391.1-391.10; R.S. 17:411.

HISTORICAL NOTE: Promulgated by the Board of Elementary and Secondary Education, LR 32:1825 (October 2006), amended LR 38:

Chapter 8. Certification Appeal Process

§803. Appeal Process

A. - A.3.g. ...

h. have not met the standards of effectiveness for three years pursuant to Bulletin 130 and R.S.17:3902.

4. Appeals relating to the issuance or renewal of certificates based on the standards of effectiveness must follow the grievance procedure through the LEA as identified in Bulletin 130.

AUTHORITY NOTE: Promulgated in accordance with R.S. 17:6 (A)(10), (11), (15); R.S. 17:7(6); R.S. 17:10; R.S. 17:22(6); R.S. 17:391.1-391.10; R.S. 17:411.

HISTORICAL NOTE: Promulgated by the Board of Elementary and Secondary Education, LR 32:1829 (October 2006), amended LR 36:487 (March 2010), LR 38:

Chapter 9. Actions Related to the Suspension/Denial and Revocation of Louisiana Certificates

§901. Overview

A. Teaching certificates can be denied, suspended, or revoked for certain criminal offenses and/or for the submission of fraudulent documentation. Certificates shall also be suspended for individuals who have earned three years of ineffective evaluations within a certification renewal period pursuant to Bulletin 130 and R.S.17:3902 and individuals who have been dismissed by an LEA for facilitating cheating. This Chapter presents those circumstances plus the circumstances under which certificates can possibly be reinstated.

AUTHORITY NOTE: Promulgated in accordance with R.S. 17:6 (A)(10), (11), (15); R.S. 17:7(6); R.S. 17:10; R.S. 17:22(6); R.S. 17:391.1-391.10; R.S. 17:411.

HISTORICAL NOTE: Promulgated by the Board of Elementary and Secondary Education, LR 32:1830 (October 2006), amended LR 38:

§908. Suspension and Revocation of Certificate/Endorsement Due to Facilitation of Cheating

A. A Louisiana teaching or educational leadership certificate shall be suspended and revoked if the individual holding the certificate has been dismissed by his/her employing LEA as a result of being found guilty of facilitating cheating, provided the LEA:

1. conducts an investigation into the allegations of cheating;

2. gathers sufficient evidence to confirm the cheating was facilitated by the employee;

3. dismisses the employee as a result of this offense;

4. notifies the department that the individual has been dismissed for this reason; and

5. provides evidence to justify the termination.

B. When the department is notified that any teacher has been dismissed by his/her employing LEA as a result of being found guilty of facilitating cheating, the following process shall take place:

1. Department staff shall attempt to contact the teacher/administrator to inform him/her that the department has information regarding his/her dismissal as a result of being found guilty of facilitating cheating and is proceeding under this policy to suspend the certificate.

2. The teacher/administrator shall have 10 working days from the date of notification to provide verification that he/she has not been dismissed as a result of being found guilty of facilitating cheating. This opportunity for response is intended as a check against mistaken identity or other incorrect information and the requested verification may be provided through a telephone conversation or written correspondence.

3. If the teacher/administrator cannot be reached, suspension of the certificate shall proceed, as will all other steps in the process outlined in this policy.

4. If the department determines that a teacher/administrator was dismissed by his/her employing LEA as a result of being found guilty of facilitating cheating, that teacher/administrator's certificate shall be suspended. The board, the teacher, and the employing school system shall be notified that the teacher's certificate has been suspended pending official board action.

5. The teacher/administrator shall be notified by certified mail and by any other appropriate means of notice that his/her certificate has been suspended and that the certificate will be revoked unless the teacher/administrator can provide documentation that he/she was not dismissed as a result of facilitating cheating.

6. If the LEA decision to dismiss the teacher is reversed, such action shall be communicated to the board through documentation provided by the LEA. The board may receive such information and order reinstatement of the teacher's certificate.

AUTHORITY NOTE: Promulgated in accordance with R.S. 17:6 (A)(10), (11), (15); R.S. 17:7(6); R.S. 17:10; R.S. 17:22(6); R.S. 17:391.1-391.10; R.S. 17:411.

HISTORICAL NOTE: Promulgated by the Board of Elementary and Secondary Education, LR 38:

§910. Suspension and Non-Renewal of Certificate/Endorsement Due to Ineffectiveness

A. A Louisiana teaching or educational leadership certificate/endorsement shall be suspended if an individual has not successfully met the standards of effectiveness pursuant to Bulletin 130 and R.S.17:3902 for any three years within a certification or endorsement renewal period.

B. When the department determines that a teacher or administrator has not met the standards of effectiveness for any three years within a certification or endorsement renewal period, the following process shall take place.

1. Department staff shall attempt to contact the teacher/administrator to inform him/her that the department has information indicating he/she has received three years of Ineffective ratings within a certification or endorsement renewal period and is proceeding under this policy to suspend the certificate.

2. The teacher/administrator shall have 10 working days from the date of notification to provide verification that

his/her effectiveness ratings were mistakenly reported or since overturned by his/her employing LEA. This opportunity for response is intended as a check against mistaken identity or other incorrect information and the requested verification may be provided through a telephone conversation or written correspondence.

3. If the teacher/administrator cannot be reached, suspension of the certificate shall proceed, as will all other steps in the process outlined in this policy.

4. If the department determines that a teacher/administrator has not met the standards of effectiveness for three years within a certification or endorsement renewal period, that teacher/administrator's certificate/endorsement shall be suspended. The teacher/administrator and the employing LEA shall be notified that the teacher/administrator's certificate has been suspended.

5. The teacher/administrator shall be notified by certified mail and by any other appropriate means of notice that his/her certificate has been suspended and that the certificate will not be renewed unless the teacher/administrator can provide documentation that his/her effectiveness ratings were mistakenly reported or overturned by his/her employing LEA.

6. If the teacher/administrator's certificate remains suspended upon the culmination of his/her certification/endorsement renewal period, the department shall not renew the certification/endorsement.

7. If the LEA's Ineffective ratings for the teacher/administrator are reversed, such action shall be communicated to the board through documentation provided by the LEA. The board may receive such information and order reinstatement of the teacher/administrator's certificate/endorsement.

AUTHORITY NOTE: Promulgated in accordance with R.S. 17:6 (A)(10), (11), (15); R.S. 17:7(6); R.S. 17:10; R.S. 17:22(6); R.S. 17:391.1-391.10; R.S. 17:411.

HISTORICAL NOTE: Promulgated by the Board of Elementary and Secondary Education, LR 38:

Family Impact Statement

In accordance with Section 953 and 974 of Title 49 of the Louisiana Revised Statutes, there is hereby submitted a Family Impact Statement on the Rule proposed for adoption, repeal or amendment. All Family Impact Statements shall be kept on file in the state board office which has adopted, amended, or repealed a Rule in accordance with the applicable provisions of the law relating to public records.

1. Will the proposed Rule affect the stability of the family? No.

2. Will the proposed Rule affect the authority and rights of parents regarding the education and supervision of their children? No.

3. Will the proposed Rule affect the functioning of the family? No.

4. Will the proposed Rule affect family earnings and family budget? No.

5. Will the proposed Rule affect the behavior and personal responsibility of children? No.

6. Is the family or a local government able to perform the function as contained in the proposed Rule? No.

Small Business Statement

The impact of the proposed Rule on small businesses as defined in the Regulatory Flexibility Act has been considered. It is estimated that the proposed action is not expected to have a significant adverse impact on small businesses. The agency, consistent with health, safety, environmental and economic welfare factors has considered and, where possible, utilized regulatory methods in the drafting of the proposed rule that will accomplish the objectives of applicable statutes while minimizing the adverse impact of the proposed rule on small businesses.

Public Comment

Interested persons may submit written comments via the U.S. Mail until 4:30 p.m., September 19, 2012 to Nina A. Ford, State Board of Elementary and Secondary Education, P.O. Box 94064, Capitol Station, Baton Rouge, LA 70804-9064.

Catherine R. Pozniak
Executive Director

FISCAL AND ECONOMIC IMPACT STATEMENT FOR ADMINISTRATIVE RULES
RULE TITLE: Bulletin 746—Louisiana Standards for State Certification of School Personnel

I. ESTIMATED IMPLEMENTATION COSTS (SAVINGS) TO STATE OR LOCAL GOVERNMENT UNITS (Summary)

The proposed policy revisions align the certification of school personnel with Act 54 of the 2010 Regular Legislative Session. The proposed revisions will require that ancillary teachers, career trade and technical and industrial personnel, and educational leaders meet the standards of effectiveness mandated by Act 54 in order to obtain a higher level certificate or to renew a certificate. The revision in policy will also prohibit an individual who has not met the standards of effectiveness to appeal to the Teacher Certification Appeals Counsel for certification. This policy will also allow the suspension and revocation of a teaching certificate due to facilitation of cheating and will also allow the suspension of a certificate for a teacher who has received three years of ineffective teaching. The local school districts may incur additional costs related to professional development and/or intensive assistance programs for teachers and/or administrators based upon their individual needs. The adoption of this policy will cost the Department of Education approximately $700 (printing and postage) to disseminate the policy.

II. ESTIMATED EFFECT ON REVENUE COLLECTIONS OF STATE OR LOCAL GOVERNMENTAL UNITS (Summary)

This policy will have no effect on revenue collections.

III. ESTIMATED COSTS AND/OR ECONOMIC BENEFITS TO DIRECTLY AFFECTED PERSONS OR NONGOVERNMENTAL GROUPS (Summary)

This policy will have no effect on costs and/or economic benefits to directly affected persons or non-governmental groups.

IV. ESTIMATED EFFECT ON COMPETITION AND EMPLOYMENT (Summary)

This policy will require that data from performance evaluations be used to make employment decisions for public school teachers and administrators.

Beth Scioneaux
Deputy Superintendent
1208#032

H. Gordon Monk
Legislative Fiscal Officer
Legislative Fiscal Office

NOTICE OF INTENT

Board of Elementary and Secondary Education

Bulletin 921—Policy and Procedure Manual for the Louisiana Quality Education Support Fund 8(g)
(LAC 28:XCIII.Chapters 1-11)

In accordance with R.S. 49:950 et seq., the Administrative Procedure Act, notice is hereby given that the Board of Elementary and Secondary Education approved for advertisement revisions to Bulletin 921—Policy and Procedure Manual for the Louisiana Quality Education Support Fund 8(g). Proposed revisions incorporate current policy and procedures that have been updated since the bulletin was last approved. Upon final adoption, the revised bulletin will replace in its entirety any previously adopted versions.

Title 28
EDUCATION
Part XCIII. Bulletin 921—Policy and Procedure Manual for the Louisiana Quality Education Support Fund 8(g)
Chapter 1. Legislation and Purpose
§101. Introduction

A. The Louisiana Education Quality Trust Fund (Permanent Trust Fund) was established in September of 1986 by Louisiana Constitution Article VII, Section 10.1, R.S. 17:3801. The Permanent Trust Fund is to receive the bulk of the proceeds from an offshore oil revenue settlement with the federal government. A separate Louisiana Quality Education Support Fund (support fund) was created in the Louisiana State Treasury to receive and hold the interest earnings from the trust. Fifty percent of the earnings in the support fund are constitutionally mandated to be appropriated by the legislature and allocated by the Louisiana state Board of Elementary and Secondary Education (BESE) for the enhancement of elementary and secondary education programs. The remaining fifty percent will be allocated by the Louisiana Board of Regents. To accomplish the goal of enhancement, the Constitution establishes the following as the purposes for which the BESE can allocate funds:

1. to provide compensation to city or parish school board of professional instructional employees;
2. to insure an adequate supply of superior textbooks, library books, equipment, and other instructional materials;
3. to fund exemplary programs in elementary and secondary schools designed to improve elementary and secondary student academic achievement or vocational-technical skill;
4. to fund carefully defined research efforts, including pilot programs, designed to improve elementary and secondary student academic achievement;
5. to fund school remediation programs and preschool programs;
6. to fund the teaching of foreign languages in elementary and secondary schools;
7. to fund an adequate supply of teachers by providing scholarships or stipends to prospective teachers in academic or vocational-technical areas where there is a critical teacher shortage.

B. The constitution and statutory law provide that the BESE must annually submit a program and budget to the legislature and the governor at least 60 days prior to the regular session, the program and budget for the expenditures for which it will make allocations. The allocations must not displace, replace or supplant appropriations from the general fund for the purposes of implementing the Minimum Foundation Program.

C. Contained in this manual are the policies adopted by the BESE to govern activities for the allocation of monies from the 8(g) support fund under its control. From these funds, the BESE will make allocations to enhance elementary and secondary education programs in Louisiana.

AUTHORITY NOTE: Promulgated in accordance with R.S. 17:6(A)(10) and R.S. 49:951 et seq.

HISTORICAL NOTE: Promulgated by the Board of Elementary and Secondary Education, LR 38:

§103. Definitions

A. As used in this document, the following terms shall have the meaning specified:

8(g) Advisory Council—an advisory council to the BESE which annually makes recommendations on the program, budget, and recommended projects for funding to be allocated by the BESE. The council shall operate in accordance with the BESE policy concerning the operation of advisory councils and shall serve without compensation, except for reasonable and necessary expenses for attending meetings and performing duties.

8(g) Program and Budget—consists of the broad categories of programs within constitutional categories and the total dollars the board proposed to fund in each category.

8(g) Support Fund (Louisiana Quality Education Support Fund)—a special fund in the Louisiana State Treasury, as specified in Article VII, Section 10.1 of the Louisiana Constitution and R.S. 17:3801. Fifty percent of the monies accruing to the support fund will be reimbursed by the treasurer on an annual basis in accordance with legislative appropriation for allocation by the Louisiana state Board of Elementary and Secondary Education (BESE) and the remaining 50 percent by the Louisiana Board of Regents.

Administrative Costs—no more than 3 percent of the average annual amount of actual expenditures by each board for the most recent three previous fiscal years for which actual expenditures are available shall be utilized for employment of personnel and associated travel and other benefits, the operation of the 8(g) Advisory Council activities, costs associated with monitoring and administration of funded activities, and the necessary evaluations, audits, and preparation of the annual program and budget for the allocation process.

Applicant—an eligible agency which submits a proposal for funding in response to a request for projects by the BESE.

Approved Nonpublic School—any nonpublic school which has been certified by the board to meet nonpublic school standards and is approved for state funding under Brumfield vs. Dodd.

Board—Louisiana state Board of Elementary and Secondary Education, also referred to as BESE and SBESE.

Budgets—a detailed monetary explanation for proposed expenditures for each project. These must be approved prior to the release of funds.

Equipment—equipment used for day-to-day, direct instruction of students. The term includes all items that are durable (sturdy) in nature and tend to last more than a year.

The term does not include equipment used in any manner for administrative purposes, such as copiers, office file cabinets and/or office furniture, and so forth.

Exemplary Program—a model program or project which is worthy of imitation and which provided the following results:

a. there was ample objective evidence of effectiveness;

b. the stated objectives were obtained;

c. the educational needs of the students were met; and

d. there was a clear and attributable connection between treatment and effect.

Excess Costs—funds which may be assessed by an applicant to conduct the activities listed in a proposal for 8(g) funds. All assessments must relate directly to the proposed 8(g) activities and reflect costs to the applicant which are above and beyond costs for normal operating activities.

Fiscal Year (FY)—the fiscal year shall begin on July 1 and end June 30.

Foreign Language Instruction—academic instruction in any language other than English. The term does not include instruction in English as a second language.

Library Books—any books to be available for circulation among the general school population, or a specific component of the general school population, for research or enhancement.

Louisiana Education Quality Trust Fund (Permanent Trust Fund)—a fund in the Louisiana State Treasury which is derived from settlement with the federal government under 43 USC 1337(g), as specified in Article VII, Section 10.1 of the Louisiana Constitution and R.S. 17:3801. Earnings of the Permanent Trust Fund accrue to the Louisiana Quality Education Support Fund as specified by law.

Other Instructional Materials—any materials used in the direct instruction of students which are not included under the annual per-student allocation for "materials of instruction" through the Department of Education, but not limited to, computer software, art and music supplies, instructional films, records slides, and other materials of a similar nature.

Pilot Program—an educational program which will implement educational procedures, activities, objectives, standards, curricula, methodology, content, and so forth which do not presently exist in the school or school system seeking support funds for the program.

Pre-School Program—any educational program provided for children who have not attained their fifth birthday. The term includes any and all types of educational readiness activities.

Priorities—the areas of focus/need, as established by the BESE, which will be utilized in the determination of the program and budget. Examples of priorities might be programs of statewide impact, regional impact, local impact or reading, discipline, mathematics, foreign languages, textbooks, etc.

Project/Application—the document submitted by an applicant requesting support fund monies which meets the requirements established by the BESE.

Project/Application Deadline/Timeline—the date(s) by which an applicant must submit a project to be considered for funding by the BESE from support fund monies.

Projects—the specific design for activities to be awarded funds under each category in the program and budget. These must be approved prior to release of funds.

Project Year/Term—the project year/term shall be the time established by an applicant/recipient in the project for the accomplishment of activities.

Recipient—an applicant who is awarded funds based upon an approved project.

Remediation Program—program which teaches an educational skill which is normally taught at a lower grade level, such as basic education provided for teenagers or adults, elementary grade level reading instruction provided at middle or secondary levels, and so forth. The term also includes social services provided in alternative school settings, special programs for high risk or potential drop-outs, and other ancillary support services designed to elevate any student or group of students to appropriate grade level performance.

Request for Projects—the document issued to elicit plans from applicants who intend to conduct an activity from 8(g) funds which meets the priorities and program and budget established by the BESE. The document will contain the mandatory components established by the BESE as a basis for funding eligibility, (i.e. project goals, objectives, activities, budget, projected project evaluation and project timelines).

Research—a procedure to investigate conditions existing within specific school populations which is structured in accordance with the accepted standards of the American Educational Research Association.

Scholarships—payment of a specific lump sum of money for a specified period of study at an institution of higher education within this state. The sum of money paid to scholarship recipients may be utilized by recipients to meet any expenses of the said study.

Stipends—payment of specific costs associated with specific course work at institutions of higher education within this state. The term also includes tuition reimbursements.

Superior Textbooks—textbooks approved by the board which are supplementary to regularly approved textbooks or used to enhance instruction.

Supplant/Displace/Replace—legally prohibited types of expenditures for 8(g) funds. For purpose of this policy, supplant, displace, and replace refer to the process whereby 8(g) funds would be utilized in lieu of funds available from a source other than 8(g) funds, or 8(g) funds would be utilized to fund activities previously funded by a source other than 8(g) funds. The prohibition specifically refers to State General Fund (SGF) monies utilized to fund the Minimum Foundation Program in elementary and secondary education and SGF funded activities in vocational-technical education. The terms shall apply to the two fiscal years prior to the effective date of funding.

Technology—any tool that can be used in the school with students to enhance academic achievement (such as local and remote computer-based information, multimedia, calculators, satellite and broadcast resources) or any course

or program which employs the use of such technology as it relates to student academic achievement in any of the core curriculum areas undergoing standards reform.

AUTHORITY NOTE: Promulgated in accordance with R.S. 17:6(A)(10).

HISTORICAL NOTE: Promulgated by the Board of Elementary and Secondary Education, LR 38:

Chapter 3. 8(g) Advisory Council

§301. Duties and Responsibilities of the 8(g) Advisory Council

A. The 8(g) Advisory Council shall have the following responsibilities:

1. to make recommendations with respect to the board's annual establishment of priorities;

2. to make recommendations concerning any support fund policies, procedures, and/or activities;

3. to participate in any public hearings conducted by the board relative to the support fund;

4. to undertake and perform such other responsibilities as may from time to time be delegated by the board.

AUTHORITY NOTE: Promulgated in accordance with R.S. 17:6(A)(10).

HISTORICAL NOTE: Promulgated by the Board of Elementary and Secondary Education, LR 38:

§303. Composition of the 8(g) Advisory Council

A. Refer to LAC 28:I.503 (advisory councils) for the composition of membership.

AUTHORITY NOTE: Promulgated in accordance with R.S. 17:6(A)(10)

HISTORICAL NOTE: Promulgated by the Board of Elementary and Secondary Education in LR 38:

Chapter 5. Public Participation

§501. Public Participation in Establishment of Priorities for Expenditure of Support Fund Monies

A. The board shall conduct at least one hearing annually to receive public input, ideas, and suggestions for programs and objectives for the expenditure of support fund proceeds for elementary and secondary schools.

AUTHORITY NOTE: Promulgated in accordance with R.S. 17:6(A)(10)

HISTORICAL NOTE: Promulgated by the Board of Elementary and Secondary Education in LR 38:

§503. Public Notice of Hearings

A. The board shall publish the date(s), time(s), and location(s) of such hearing(s) at least two weeks prior to each scheduled hearing in order to provide adequate notice to the public.

AUTHORITY NOTE: Promulgated in accordance with R.S. 17:6(A)(10).

HISTORICAL NOTE: Promulgated by the Board of Elementary and Secondary Education, LR 38:

§505. Deadline for Completion of Public Hearings

A. Public hearings, as authorized by Section 110 hereof, shall be completed by October 31 of each year.

AUTHORITY NOTE: Promulgated in accordance with R.S. 17:6(A)(10).

HISTORICAL NOTE: Promulgated by the Board of Elementary and Secondary Education, LR 38:

§507. Compilation of Recommendations Made at Public Hearings

A. The recommendations tendered at any such public hearing(s) shall be compiled by the board staff for review by the board at its next meeting, and shall be available to the 8(g) Advisory Council and the public no later than December 31.

AUTHORITY NOTE: Promulgated in accordance with R.S. 17:6(A)(10).

HISTORICAL NOTE: Promulgated by the Board of Elementary and Secondary Education, LR 38:

Chapter 7. Annual 8(g) Program and Budget

Subchapter A. Establishment of Annual 8(g) Program and Budget

§701. Establishment of Annual 8(g) Program and Budget; Priorities

A. During every fiscal year, the board shall establish the 8(g) program and budget for the expenditure of support fund monies which are anticipated to become available in the subsequent fiscal year. In delineating the educational programs and objectives which shall constitute its 8(g) program, the board may establish one or more priorities. In developing the 8(g) budget, the board shall assign dollar amounts to each category program included in its proposed 8(g) program.

AUTHORITY NOTE: Promulgated in accordance with La. Const. Art. VII, §10.1, R.S. 17:7.3, and R.S. 17:3801.

HISTORICAL NOTE: Promulgated by the Board of Elementary and Secondary Education, LR 38:

§703. Establishment of Priorities through the Allocation of Support Fund Monies within Constitutional Categories

A. The board shall establish its annual priorities for the expenditure of support fund monies by allocating a specific dollar amount and/or a specific percentage of the total support fund monies appropriated for any fiscal year to one or more of the categories of educational programs eligible to receive support fund monies, as follows:

1. to provide compensation to city or parish school board or postsecondary vocational-technical professional instructional employees;

2. to insure an adequate supply of superior textbooks, library books, equipment, and other instructional materials;

3. to fund exemplary programs in elementary, secondary, or vocational-technical schools designed to improve elementary, secondary, or vocational-technical student academic achievement or vocational-technical skills;

4. to fund carefully defined research efforts, including pilot programs, designed to improve elementary and secondary students academic achievement;

5. to fund school remediation programs and pre-school programs;

6. to fund the teaching of foreign languages in elementary and secondary schools; and

7. to fund an adequate supply of teachers by providing scholarships or stipends to prospective teachers in academic or vocational-technical areas where there is a critical teacher shortage.

B. In establishing annual priorities for the expenditure of support fund monies, the board may specify types of educational programs or projects which shall receive preference for funding. For example, the board may elect to give preference in the award of support fund monies, within the constitutional category of exemplary programs, to exemplary projects designed to reduce drop-outs.

AUTHORITY NOTE: Promulgated in accordance with La. Const. Art. VII, § 10.1, R.S. 17:7.3, and R.S. 17:3801.

HISTORICAL NOTE: Promulgated by the Board of Elementary and Secondary Education, LR 38:

§705. Allocation of Support Fund Monies for Statewide Purposes

A. The board, in its sole discretion, may allot a specific amount or a percentage of support fund monies for expenditures necessary to implement specific statewide educational projects mandated by the board. For example, the board may elect to allot a specific percentage of the total support fund monies available in any given fiscal year to the implementation of foreign language instruction in the elementary grades, as previously mandated by the board. The board may issue general or specific requests for projects for the development and/or implementation of any statewide educational project.

AUTHORITY NOTE: Promulgated in accordance with R.S. 17:6(A)(10).

HISTORICAL NOTE: Promulgated by the Board of Elementary and Secondary Education, LR 38:

§707. Set-Aside for Administrative Purposes; Limitation on Amount; Purposes for which Set-Aside May Be Expended

A. The board shall determine the percentage of anticipated support fund revenues which shall be set aside to pay costs associated with the administration of the Program. Such administrative set-aside shall not exceed no more than 3 percent of the average annual amount of actual expenditures by each board for the most recent 3 previous fiscal years. The administrative set aside shall be used to pay costs including, but not limited to:

1. the salaries and related costs of 8(g) personnel;
2. the expenses of the 8(g) Advisory Council;
3. the costs of public hearings;
4. the expenses of review committees which may assist the board in necessary determinations as to eligibility of applicants and/or feasibility of projects;
5. necessary monitoring and evaluation of funded projects;
6. preparation and dissemination of annual reports; and
7. materials, supplies, furniture, and equipment.

AUTHORITY NOTE: Promulgated in accordance with La. Const. Art. VII, § 10.1, R.S. 17:7.3, and R.S. 17:3801.

HISTORICAL NOTE: Promulgated by the Board of Elementary and Secondary Education, LR 38:

§709. Notice of Adoption of Annual 8(g) Program and Budget

A. The board shall publish a notice of its adoption of the annual 8(g) program and budget in the *Louisiana Register*. Such notice shall consist of a summary of the educational objectives and/or programs to receive budgetary priorities, including the proposed allocation. Such report shall include, but not be limited to, the following:

1. the amount set aside for administrative purposes;
2. an explanation of specific priority(ies), if any, established by the board, and the dollar amount allocated for each program; and
3. any additional information relative to board actions which has a direct bearing upon the eventual awarding of support fund monies to eligible recipients.

AUTHORITY NOTE: Promulgated in accordance with R.S. 17:6(A)(10).

HISTORICAL NOTE: Promulgated by the Board of Elementary and Secondary Education, LR 38:

§711. Allocations of the Board to be Reported to the Governor and the Legislature

A. The decisions of the board relative to the expenditure of support fund monies in the fiscal year next following establishment of the annual 8(g) program and budget shall be reported to the legislature and the governor not less than 60 days prior to each Regular Session of the Legislature.

AUTHORITY NOTE: Promulgated in accordance with La. Const. Art. VII, § 10.1, R.S. 17:7.3, and R.S. 17:3801.

HISTORICAL NOTE: Promulgated by the Board of Elementary and Secondary Education, LR 38:

Subchapter B. Eligibility Criteria

§713. Eligibility Criteria

A. The following eligibility criteria apply to all applications for support fund monies.

1. The project to be funded must be within a category specified under Article VII, Section 10.1(D)(2) of the Louisiana Constitution and the annual program adopted by the board. (See §703 hereof for a verbatim listing of the categories of educational programs authorized in said provision.)
2. No project in an elementary or secondary school can be approved through the support fund if the project replaces a program funded through the Minimum Foundation Program or State General Fund unless there has been a lapse of at least two fiscal years.
3. All applicants must also comply with eligibility requirements, if any, established for each constitutional category. Program category requirements are set forth in the Sections of these regulations, relative to each constitutional category.

AUTHORITY NOTE: Promulgated in accordance with La. Const. Art. VII, § 10.1, R.S. 17:7.3, and R.S. 17:3801.

HISTORICAL NOTE: Promulgated by the Board of Elementary and Secondary Education, LR 38:

§715. Eligible Applicants

A. The following are eligible to apply for an award of support fund monies:

1. any public or approved nonpublic elementary/secondary school system located within the state of Louisiana. Applications made on behalf of a specific classroom teacher, a department within a school, a group of schools, or on a system-wide basis shall be eligible for submission only through the approved recipient who shall serve as fiscal agent;
2. any approved elementary or secondary school located within the state of Louisiana that is not part of a school system, provided that the school has been certified by the state Board of Elementary and Secondary Education to meet all applicable standards and is approved for state funding under Brumfield vs. Dodd. Applications made on behalf of a specific classroom, teacher, or department, or an entire school shall be eligible for submission only through the approved recipient who shall serve as fiscal agent;
3. private organizations/individuals shall be eligible to submit only through an approved recipient who shall serve as fiscal agent;
4. state agencies shall be eligible for funding for noncompetitive statewide projects, as allocated by BESE.

AUTHORITY NOTE: Promulgated in accordance with R.S. 17:6(A)(10).

HISTORICAL NOTE: Promulgated by the Board of Elementary and Secondary Education, LR 38:

Subchapter C. Application for Support Fund Monies

§717. Application for Support Fund Monies

A. It is required that eligible recipients desiring to apply for support fund monies in any constitutional category submit an application.

AUTHORITY NOTE: Promulgated in accordance with La. Const. Art. VII, § 10.1, R.S 17:7.3, and R.S. 17:3801.

HISTORICAL NOTE: Promulgated by the Board of Elementary and Secondary Education, LR 38:

§719. Period to be Covered by Application for Support Fund Monies

A. The maximum years eligible to receive funding for a continuing project is three years. It should be clearly understood by applicants, however, that no project will be funded for more than one fiscal year. Funding for subsequent years contained in the project proposal is subject to reconsideration by the board in each subsequent fiscal year. The award of support fund monies will, in all cases, be guaranteed for one fiscal year only.

B. Applications for support fund monies may be submitted by eligible applicants for varying periods of time, as follows:

1. for periods of less than one fiscal year;

2. for periods which correspond with the beginning and ending dates of one fiscal year. No projects will be funded for a period which begins in one fiscal year and ends in a different fiscal year;

3. For periods of two or more fiscal years. It should be clearly understood by applicants, however, that no project will be funded for more than one fiscal year. Funding for any subsequent years contained in the project proposal is subject to reconsideration by the board in each subsequent fiscal year. The award of support fund monies will, in all cases, be guaranteed for one fiscal year only.

AUTHORITY NOTE: Promulgated in accordance with R.S. 17:6(A)(10).

HISTORICAL NOTE: Promulgated by the Board of Elementary and Secondary Education, LR 38:

Subchapter D. Evaluation of Support Fund Applications

§721. Determination of Eligibility

A. An application for support funds must demonstrate that the project for which support funds are requested complies with the constitutional eligibility factors enumerated in Section 121 hereof, and that the project conforms to the priorities and objectives delineated in the annual 8(g) program and budget adopted by the board for that specific funding period.

B. All applications received in the board office shall be reviewed by a minimum of two employees of the board to determine compliance with the constitutional requirements established under Article VII, Section 10.1(D)(2) and enumerated at Section 121 hereof.

AUTHORITY NOTE: Promulgated in accordance with La. Const. Art. VII, § 10.1, R.S 17:7.3, and R.S. 17:3801.

HISTORICAL NOTE: Promulgated by the Board of Elementary and Secondary Education, LR 38:

§723. Award of Support Fund Grants

A. Funding determinations shall be finalized by the board for projects to be funded as of July 1.

B. The board staff shall notify all applicants of the disposition of their projects following board approval.

AUTHORITY NOTE: Promulgated in accordance with R.S. 17:6(A)(10).

HISTORICAL NOTE: Promulgated by the Board of Elementary and Secondary Education, LR 38:

§725. Provisions Relative to Superior Textbooks, Library Books, Equipment, and Other Instructional Materials

A. Projects which anticipate across-the-board increases in the per-student allocation for textbooks, library books, and other instructional materials for a single elementary/secondary school or school system are not eligible for funding in this category, since such allocations will be addressed by the board on a statewide basis. In the annual establishment of priorities for the expenditure of support fund monies, the board may allocate support funds for an across-the-board increase in the per-student allocation for textbooks, library books, and other instructional materials.

B. The following types of projects are eligible for support funds in this category:

1. textbooks:

a. projects which provide for the purchase of textbooks for a specific instructional program which is not offered to an entire student body, such as textbooks for advanced study in any scientific or mathematics field, or other programs of a similar nature at any grade level;

b. projects which will provide necessary textbooks for advanced Placement programs in any secondary school;

c. Projects which provide for the purchase of textbooks suitable to a program of independent study for an academically gifted student at any grade level, provided that evidence must be provided in the proposal of the academic standing of any student engaged in independent study for whom special materials will be acquired with support funds;

d. Projects which provide for the purchase of textbooks not included on the Textbook Adoption List, such as textbooks which are appropriate for handicapped students, provided that such textbooks must be listed in the proposal.

2. Library Books

a. Projects which provide for the purchase of current encyclopedias, world atlases, etc. where no similar resource materials are available within a given school;

b. Projects which will permit the acquisition of appropriate library resource materials to be used in any specific instructional program, such as texts in a foreign language offered in the school which will acquire the additional library volumes, additional volumes in a specific field of science or mathematics, and so forth;

3. Equipment

a. Projects which provide for the purchase of instructional equipment, provided that only equipment which is used for the direct instruction of students on a daily basis is eligible for support funds in this category.

b. Equipment purchased with 8(g) funds should remain with the program as long as it is operating [with either 8(g) or other funding source]. If the equipment is more than four years old, is non-operational, or is obsolete, the equipment may be surplused or disposed of following the appropriate agency and State regulations and its disposition

reported to the Board of Elementary and Secondary Education office.

c. When a program terminates, the equipment should be moved to another 8(g) program, and the disposition should be reported to the board.

4. Other Instructional Materials:

a. projects which provide for the purchase of instructional software programs marketed by commercial firms to be used in existing computer equipment;

b. projects which provide for the purchase of art or music supplies, such as oil paints, paint brushes, sheet music, records, etc.;

c. projects which provide for the purchase of instructional supplies such as saws, hammers, nails, etc., to be used in vocational training;

d. projects which provide for the purchase of foodstuffs to be used in family and consumer science instructional programs funded with 8(g) monies;

e. projects which provide for the purchase of instructional films and slides; and

f. projects which provide for the purchase of other recognized instructional materials which are not available under the annual per-student allocations for materials of instruction, provided that such other instructional materials must be fully described in the project.

C. The project must include the number and grade levels of students who will have access to the items purchased.

D. The project must contain the school site where items purchased will be housed.

E. The project must include the name and title of the school employee responsible for proper usage of the items purchased.

F. Whenever the purchases are for the use of a specific population within a school, such as advanced placement students, the project must name the specific population and must illustrate the reasons for selecting the specific population to receive support fund monies.

AUTHORITY NOTE: Promulgated in accordance with R.S. 17:6(A)(10)

HISTORICAL NOTE: Promulgated by the Board of Elementary and Secondary Education in LR 38:

§727. Provisions Relative to Exemplary Programs in Elementary and Secondary Schools

A. The program must clearly demonstrate that appropriate implementation will result in improved student achievement at the elementary/secondary level.

B. In the program, there must be a clear correlation between the activities to be implemented and the results to be achieved.

AUTHORITY NOTE: Promulgated in accordance with R.S. 17:6(A)(10)

HISTORICAL NOTE: Promulgated by the Board of Elementary and Secondary Education in LR 38:

§729. Provisions Relative to Research and Pilot Programs Designed to Improve Elementary and Secondary Student Academic Achievement

A. An eligible applicant may receive funding for a program which is limited to educational research. However, any applicant seeking funds for a "pilot program" must either:

1. incorporate a "research component within the pilot program in order to verify that program activities do, in fact, result in improved academic performance; or

2. must include documentation that legitimate research available in the literature already demonstrates that the activities to be implemented in the pilot program have resulted in improved student academic performance.

B. The following requirements apply to research to be funded with support fund monies:

1. The activities to be undertaken must meet or exceed the standards established by the American Education Research Association.

2. There must be clear guarantees that the rights of participants will be protected throughout the research activities.

3. There must be a clear correlation between the anticipated results of the research and improved elementary and secondary student academic performance.

4. The applicant must assure that the board will receive interim reports and a comprehensive final report of all research findings.

C. The following requirements apply to pilot programs to be funded with support fund monies.

1. The program must either:

a. include a research component; or

b. include documentation that the design of the pilot program is based upon validated research findings.

2. There must be clear guarantees that the rights of participants in any research component of the pilot program will be protected throughout the program period.

AUTHORITY NOTE: Promulgated in accordance with R.S. 17:6(A)(10)

HISTORICAL NOTE: Promulgated by the Board of Elementary and Secondary Education in LR 38:

§731. Provisions Relative to School Remediation Programs

A. The population to be served must be clearly identified in the proposal.

B. The need for the remediation of the identified population must be clearly documented by provision of educational performance data acceptable to the board.

C. The location in which the services will be provided must be included in the proposal (e.g., the location of an alternative school setting).

D. If financial or personnel support will be received from any source other than the applicant (e.g., volunteer instructors from the community, "big brother" type support provided by a civic or religious organization, etc.), the source and type of such assistance, including the level of financial support, must be included in the proposal.

AUTHORITY NOTE: Promulgated in accordance with R.S. 17:6(A)(10)

HISTORICAL NOTE: Promulgated by the Board of Elementary and Secondary Education in LR 38:

§733. Provisions Relative to Pre-school Programs

A. The population to be served must be clearly identified.

B. The need of the target population for pre-school instruction must be substantiated by test or demographic data acceptable to the board.

C. The certification to be required of instructional personnel must be included in the project.

AUTHORITY NOTE: Promulgated in accordance with R.S. 17:6(A)(10)

HISTORICAL NOTE: Promulgated by the Board of Elementary and Secondary Education in LR 38:

§735. Provisions Relative to Foreign Language Instruction in Elementary and Secondary Schools

A. The following types of projects are eligible in this constitutional category:

1. programs which offer foreign language instruction designed to improve overall academic performance of students, provided that proposals relying on improved academic performance must include evidence from validated research to support the anticipated improvements;

2. programs designed for a specific target population, provided that projects for such programs must clearly identify the population to be served;

3. expansion of the regular foreign language program offered at the elementary or secondary level in any school system.

AUTHORITY NOTE: Promulgated in accordance with R.S. 17:6(A)(10)

HISTORICAL NOTE: Promulgated by the Board of Elementary and Secondary Education in LR 38:

Chapter 9. Administration of Annual 8(g) Program and Budget

§901. Procedure for Payment to Support Fund Grantees

A. The board shall authorize payment to each support fund grantee in accordance with the approved project budget.

B. Each grantee shall submit a claim for reimbursement, in the form prescribed by the board. Grantees may request reimbursement of expenditures on a monthly basis.

C. Claims for reimbursement must conform to the budget approved by the board for each project.

D. Budget amendments which do not exceed 20 percent of the line item of the budget, or 5 percent of the total budget, may be approved routinely by the board staff. Any line item amendment to an approved budget which exceeds 20 percent of the approved line item must be submitted to the board for its approval.

E. Each grantee shall submit to the board a summary report showing all expenditures during the approved project period no later than 60 days after the close of the project period.

F. Any grantee not in compliance with Subsections D or E of this Section shall be required to repay the grant money with interest upon demand of the board.

AUTHORITY NOTE: Promulgated in accordance with R.S. 17:6(A)(10)

HISTORICAL NOTE: Promulgated by the Board of Elementary and Secondary Education in LR 38:

§903. Quarterly Report to the Board

A. The Department shall submit to the board a quarterly report showing all expenditures in each project no later than 30 days after the close of each quarter.

AUTHORITY NOTE: Promulgated in accordance with R.S. 17:6(A)(10)

HISTORICAL NOTE: Promulgated by the Board of Elementary and Secondary Education in LR 38:

§905. Mid-Year Progress to Legislature

A. Each recipient of 8(g) funds (which is not a public or quasi-public entity that is a budget unit of the state) must provide a written report to the BESE office concerning the use of funds and progress on meeting goals and objectives of the project in March.

AUTHORITY NOTE: Promulgated in accordance with R.S. 17:6(A)(10)

HISTORICAL NOTE: Promulgated by the Board of Elementary and Secondary Education in LR 38:

§907. Final Programmatic Report

A. Each support fund grantee shall submit a final programmatic report to the board within 60 days after the close of a project period. The final programmatic report shall include, but not be limited to, the following:

1. benefits achieved by the program;

2. evidence of compliance with timelines established in the project application;

3. data showing the degree of success achieved by the project;

4. feasibility of replication of the project;

5. such other information as may be beneficial to the board in its consideration of continuation of the project.

B. Those 8(g) recipients who have not submitted End of Year Reports on prior year projects as of September 1 shall not receive current year 8(g) funds until reports have been submitted.

AUTHORITY NOTE: Promulgated in accordance with R.S. 17:6(A)(10)

HISTORICAL NOTE: Promulgated by the Board of Elementary and Secondary Education in LR 38:

§909. Monitoring and Evaluation of Approved Support Fund Projects

A. Each project approved for support funds shall be monitored at least once during the project period.

B. The board may elect to conduct monitoring through the use of employees of the board.

C. The board may elect to employ the services of independent monitors to conduct some or all of the monitoring of projects.

D. The board may employ one or more independent consultants to conduct an in-depth evaluation of such projects as may be selected by the board.

AUTHORITY NOTE: Promulgated in accordance with R.S. 17:6(A)(10)

HISTORICAL NOTE: Promulgated by the Board of Elementary and Secondary Education in LR 38:

§911. Annual Report of Each Fiscal Year Support Fund Activities

A. No later than December 31st of each year, the department shall prepare and submit to the board a comprehensive report of all projects funded during the previous fiscal year. The report shall contain such information as may be required by the board. The report shall be submitted to the legislature and the governor at such time as may be deemed appropriate by the board.

AUTHORITY NOTE: Promulgated in accordance with R.S. 17:6(A)(10)

HISTORICAL NOTE: Promulgated by the Board of Elementary and Secondary Education in LR 38:

Chapter 11. Ownership/Production Rights

§1101. Ownership/Production Rights

A. Upon termination at the completion of 8(g) funding for a project/program, the state Board of Elementary and Secondary Education may approve an agency's request to retain equipment purchased with 8(g) funds based on the agency's assurance that the equipment will be used for educational enhancement.

B. All educational products developed using 8(g) funds awarded by the state Board of Elementary and Secondary Education are the property of the board and cannot be distributed for profit without explicit approval from the board.

AUTHORITY NOTE: Promulgated in accordance with R.S. 17:6(A)(10)

HISTORICAL NOTE: Promulgated by the Board of Elementary and Secondary Education in LR 38:

Family Impact Statement

In accordance with Section 953 and 974 of Title 49 of the Louisiana Revised Statutes, there is hereby submitted a Family Impact Statement on the Rule proposed for adoption, repeal or amendment. All Family Impact Statements shall be kept on file in the state board office which has adopted, amended, or repealed a rule in accordance with the applicable provisions of the law relating to public records.

1. Will the proposed Rule affect the stability of the family? No.
2. Will the proposed Rule affect the authority and rights of parents regarding the education and supervision of their children? No.
3. Will the proposed Rule affect the functioning of the family? No.
4. Will the proposed Rule affect family earnings and family budget? No.
5. Will the proposed Rule affect the behavior and personal responsibility of children? No.
6. Is the family or a local government able to perform the function as contained in the proposed Rule? Yes.

Small Business Statement

The impact of the proposed Rule on small businesses as defined in the Regulatory Flexibility Act has been considered. It is estimated that the proposed action is not expected to have a significant adverse impact on small businesses. The agency, consistent with health, safety, environmental and economic welfare factors has considered and, where possible, utilized regulatory methods in the drafting of the proposed Rule that will accomplish the objectives of applicable statutes while minimizing the adverse impact of the proposed Rule on small businesses.

Public Comments

Interested persons may submit written comments via the U.S. Mail until 4:30 p.m., September 19, 2012, to Nina A. Ford, Board of Elementary and Secondary Education, Box 94064, Capitol Station, Baton Rouge, LA 70804-9064.

Catherine R. Pozniak
Executive Director

FISCAL AND ECONOMIC IMPACT STATEMENT FOR ADMINISTRATIVE RULES
RULE TITLE: Bulletin 921—Policy and Procedure Manual for the Louisiana Quality Education Support Fund 8(g)

I. ESTIMATED IMPLEMENTATION COSTS (SAVINGS) TO STATE OR LOCAL GOVERNMENT UNITS (Summary)

Revisions to Bulletin 921: *The Policy and Procedure Manual for the Louisiana Quality Education Support Fund-8(g)*, incorporates current policy and procedures that have been updated since the bulletin was last approved.

This action will have no fiscal effect other than an estimated cost of $165 to advertise in the *Louisiana Register*.

II. ESTIMATED EFFECT ON REVENUE COLLECTIONS OF STATE OR LOCAL GOVERNMENTAL UNITS (Summary)

This action will have no effect on revenue collections of state and local government units.

III. ESTIMATED COSTS AND/OR ECONOMIC BENEFITS TO DIRECTLY AFFECTED PERSONS OR NONGOVERNMENTAL GROUPS (Summary)

This action will have no effect on cost and/or economic benefits to directly affected persons or nongovernmental groups.

IV. ESTIMATED EFFECT ON COMPETITION AND EMPLOYMENT (Summary)

This action will have no effect on competition and employment.

Kimberly V. Tripeaux
Director
1208#030

Evan Brasseaux
Staff Director
Legislative Fiscal Office

NOTICE OF INTENT

Board of Elementary and Secondary Education

Bulletin 1196—Louisiana Food and Nutrition Programs, Policies of Operation (LAC 28:XLIX.101-3501)

Editor's Note: All Sections contained in Chapters 1 through 35 are being repealed. They are not shown individually due to space and cost considerations.

In accordance with R.S. 49:950 et seq., the Administrative Procedure Act, notice is hereby given that the Board of Elementary and Secondary Education approved for advertisement the repeal in its entirety of *Bulletin 1196—Louisiana Food and Nutrition Programs, Policies of Operation:* §101 through §3501. The proposed policy repeal will eliminate the redundancy of codifying the federal law, regulations, and policies, into a separate bulletin within the *Louisiana Administrative Code*. Bulletin 741 already contains references to the USDA Child Nutrition Programs administered by the Board of Elementary and Secondary Elementary Education and all needed state policy shall be incorporated into Bulletin 741.

Title 28
EDUCATION
Part XLIX. Bulletin 1196—Louisiana Food and Nutrition Programs, Policies of Operation

Chapter 1. Administration
Repealed.

Chapter 3. Financial Management and Accounting
Repealed.

Chapter 5. Free and Reduced Price Meals
Repealed.

Chapter 7. Meal Planning Service
Repealed.

Chapter 9. Afterschool Care Program
Repealed.

Chapter 11. Personnel
Repealed.

Chapter 13. Equipment
Repealed.

Chapter 15. Procurement
Repealed.
Chapter 17. Commodities
Repealed.
Chapter 19. Sanitation
Repealed.
Chapter 21. Civil Rights—Handling Complaints
Repealed.
Chapter 23. Ethics
Repealed.
Chapter 25. Summer Food Service Program
Repealed.
Chapter 27. Special Milk Program
Repealed.
Chapter 29. Child and Adult Care Food Program
Repealed.
Chapter 31. Disaster Feeding
Repealed.
Chapter 33. Financial Management and Accounting for Child and Adult Care Food Program Family Day Care Homes (FDCH)
Repealed.
Chapter 34. National School Lunch Program and Child and Adult Care Food Program Appeals Procedures
Repealed.
Chapter 35. Glossary
Repealed.

Family Impact Statement

In accordance with Section 953 and 974 of Title 49 of the Louisiana Revised Statutes, there is hereby submitted a Family Impact Statement on the Rule proposed for adoption, repeal or amendment. All Family Impact Statements shall be kept on file in the state board office which has adopted, amended, or repealed a Rule in accordance with the applicable provisions of the law relating to public records.

1. Will the proposed Rule affect the stability of the family? No.
2. Will the proposed Rule affect the authority and rights of parents regarding the education and supervision of their children? No.
3. Will the proposed Rule affect the functioning of the family? No.
4. Will the proposed Rule affect family earnings and family budget? No.
5. Will the proposed Rule affect the behavior and personal responsibility of children? No.
6. Is the family or a local government able to perform the function as contained in the proposed Rule? No.

Small Business Statement

The impact of the proposed Rule on small businesses as defined in the Regulatory Flexibility Act has been considered. It is estimated that the proposed action is not expected to have a significant adverse impact on small businesses. The agency, consistent with health, safety, environmental and economic welfare factors has considered and, where possible, utilized regulatory methods in the drafting of the proposed Rule that will accomplish the objectives of applicable statutes while minimizing the adverse impact of the proposed Rule on small businesses.

Public Comments

Interested persons may submit written comments via the U.S. Mail until 4:30 p.m., September 19, 2012 to Nina A. Ford, State Board of Elementary and Secondary Education, P.O. Box 94064, Capitol Station, Baton Rouge, LA 70804-9064.

Catherine R. Pozniak
Executive Director

FISCAL AND ECONOMIC IMPACT STATEMENT FOR ADMINISTRATIVE RULES
RULE TITLE: Bulletin 1196—Louisiana Food and Nutrition Programs, Policies of Operation

I. ESTIMATED IMPLEMENTATION COSTS (SAVINGS) TO STATE OR LOCAL GOVERNMENT UNITS (Summary)

The deletion of Bulletin 1196 will eliminate redundancy in codification of federal law, regulation, and policy into a bulletin. Also, another State bulletin, (741) exists through which any rules previously listed in the bulletin proposed for deletion can be codified. Thus, the deletion of Bulletin 1196 in its entirety will reduce the number of bulletins to be maintained by state staff and reduce the number of bulletins to be referenced by school personnel in complying with state requirements. There will be no cost to the Department of Education as a result of deleting Bulletin 1196.

II. ESTIMATED EFFECT ON REVENUE COLLECTIONS OF STATE OR LOCAL GOVERNMENTAL UNITS (Summary)

The deletion of this bulletin will have no effect on revenue collections.

III. ESTIMATED COSTS AND/OR ECONOMIC BENEFITS TO DIRECTLY AFFECTED PERSONS OR NONGOVERNMENTAL GROUPS (Summary)

The deletion of this bulletin will have no effect on costs.

IV. ESTIMATED EFFECT ON COMPETITION AND EMPLOYMENT (Summary)

The deletion of this bulletin will have no effect on competition and employment.

Beth Scioneaux
Deputy Superintendent
1208#031

Gregory V. Albrecht
Chief Economist
Legislative Fiscal Office

NOTICE OF INTENT

Board of Elementary and Secondary Education

Technical Revisions and Updates
(LAC 28:I.103, 305-315, 501, 703-705, 709-713, 713, 719, 901, 903, 1101-1107 and 1303)

In accordance with R.S. 49:950 et seq., the Administrative Procedure Act, the Board of Elementary and Secondary Education approved for advertisement revisions to the *Louisiana Administrative Code*, Title 28, Part I. These revisions bring the "BESE Code" into alignment with current law and policy. All of the edits in this Notice of Intent are technical, rather than substantive, and are necessary for a range of reasons, including:

- legislation enacted into law since 2008;
- amendments to statutes that serve as the basis for policies within the code;
- changes in numbers assigned to statutes that are cited within authority notes at the end of each Section;

- shifts in the geographical coverage of BESE districts prompted by the 2010 Census and subsequent redistricting process;
- duplication of policies in law, which supersedes BESE's authority and to which the code should defer;
- inconsistencies within the code itself caused by changes to rules since 2008 that were not applied throughout the document; and
- edits to terminology and grammar.

Title 28
EDUCATION
Part I. Board of Elementary and Secondary Education
Chapter 1. General Provisions
§103. Definitions

BESE and/or *Board*—the Board of Elementary and Secondary Education as created by the Louisiana constitution and the *Louisiana Revised Statutes*.

Constitution—the Constitution of the State of Louisiana.

House—the Louisiana House of Representatives.

Louisiana Department of Education, or *LDE*—the Louisiana Department of Education, the administrative arm of the Board of Elementary and Secondary Education.

Senate—the Louisiana Senate.

State Superintendent—the Louisiana Superintendent of Education, who shall be the chief administrative officer of the Louisiana Department of Education and shall administer, coordinate, and supervise the activities of the LDE in accordance with law, regulation, and policy.

AUTHORITY NOTE: Promulgated in accordance with R.S. 17:6(A)(10).

HISTORICAL NOTE: Promulgated by the Board of Elementary and Secondary Education, LR 34:409 (March 2008), amended LR 38:

Chapter 3. Composition and General Authority
§305. Election of Officers and Their Duties

A. ...

B. The president shall conduct board meetings and perform duties designated by the board or by statute. The president shall sign, on behalf of the board, contracts, agreements, and/or official documents approved by the board. The president is authorized to make ad hoc decisions for the board in emergency situations when the board is not in regular or special session and where policies and statutes are silent. However, any such decisions, which constitute an obligation, official position, or action of the board, are subject to ratification by the board at the next scheduled meeting. The president shall appoint members of committees of the board.

C. - E. ...

AUTHORITY NOTE: Promulgated in accordance with R.S. 17:3 and R.S. 17:22.

HISTORICAL NOTE: Promulgated by the Board of Elementary and Secondary Education, LR 34:409 (March 2008), amended LR 38:

§307. General Powers and Duties

A. - A.2. ...

3. Supervise, manage, and operate or provide for the supervision, management, and operation of a public elementary or secondary school which has been determined to be failing, including the power to receive, control, and expend state funds appropriated and allocated pursuant to La. Const. Art. VIII, Sec. 13(B), any local contribution required by La. Const. Art. VIII, Sec. 13, and any other local revenue available to a school board with responsibility for a school determined to be failing in amounts that are calculated based on the number of students in attendance in such a school, all in the manner provided by and in accordance with law.

4. Approve the administration of the Special School District and the Recovery School District by the LDE.

5. Approve budgets of the LDE, including the Special School District and Recovery School District, and all entities under the jurisdiction of the board as provided herein.

6. - 11. ...

12. Exercise approval authority over the administration of the Special School District by the LDE pursuant to law.

13. ...

14. Exercise approval authority over the administration of the Recovery School District by the LDE pursuant to law.

15. Authorize the operation of Type 2, Type 4, and Type 5 charter schools and provide oversight through the LDE of Type 2, Type 4, and Type 5 charter schools.

a. - b. ...

c. Determine the policy and provide direction to the LDE for providing the oversight of the operation of charter schools chartered with the board.

16. ...

AUTHORITY NOTE: Promulgated in accordance with La. Const. art. VIII § 8, R.S. 17:6(A), R.S.17:7(2)(a), R.S. 17:7(3), R.S. 17:7(4), R.S. 17:7(5), R.S. 17:7(6) (a) (i), R.S. 17:7(7), R.S. 17:7(8), R.S. 17:4.1, R.S. 17:43, R.S. 17:348, R.S. 17:6(A)(10), R.S. 17:6(A)(11), R.S. 17:10.5, R.S. 17:1990 and R.S. 17:3981.

HISTORICAL NOTE: Promulgated by the Board of Elementary and Secondary Education, LR 34:410 (March 2008), amended LR 38:

§309. State Superintendent

A. - C. ...

D. General Authority

1. The state superintendent shall execute and implement those educational policies and programs which are under the supervision and control of the board and shall serve as the administrative head of the LDE.

2. ...

3. The state superintendent shall administer the Recovery School District, an intermediate education unit within the LDE, pursuant to R.S. 17:1990. As the administrative head of the LDE, the state superintendent is the appointing authority for the Recovery School District, except as provided herein.

4. The state superintendent shall be the governing authority for the Special School District, an educational service agency within the LDE, pursuant to R.S. 17:1945. As the administrative head of the LDE, the state superintendent is the appointing authority for the Special School District, except as provided herein.

5. The state superintendent may delegate, subject to the approval of the board, the appointing authority conferred upon him/her by law as to the Recovery School District to the Recovery School District superintendent. The state superintendent may delegate administrative authority conferred upon him/her by law as to the Recovery School District to the Recovery School District superintendent, subject to any restrictions provided by law, rule, or policy.

E. Duties

1. The state superintendent shall establish such divisions within the LDE as are necessary or appropriate to

carry out the functions vested by or under authority of the constitution and laws.

2. The state superintendent shall have budgetary responsibility for all funds appropriated or allocated by the state for the day-to-day operations and for the functions of the LDE that are not inconsistent with the functions of the board.

3. The state superintendent, as the administrative head of the LDE, shall oversee the administration and distribution of all federal funds received for the benefit of those phases of education under the jurisdiction of the board, in accordance with policies adopted by the board.

4. The state superintendent may review the responsibilities of the LDE and prepare a plan to restructure and reorganize the LDE subject to the approval of the board and in accordance with Chapter 15 of Title 36 of the Louisiana Revised Statutes.

5. The state superintendent shall provide staff services within the LDE that are needed by the board to carry out its constitutional and statutory mandates.

6. ...

a. The state superintendent, with the consent of the board, may establish or abolish positions that direct the offices/divisions of the LDE.

b. - c. ...

d. The state superintendent shall appoint the superintendent of the Special School District, subject to confirmation by the Senate.

e. The state superintendent shall employ/appoint and fix the salaries and duties of employees of the LDE, including the Special School District and the Recovery School District, subject to applicable Civil Service laws, rules, and regulations, and other applicable laws, rules, regulations, and policies.

f. The selection of appointees to all unclassified positions shall be based on professional, technical, and/or clerical qualifications appropriate to each position.

g. No person shall, on the basis of race, color, religion, sex, age, national origin, handicap, veteran status, or any other non-merit factor, be discriminated against in any employment practice.

h. In addition to the above, the state superintendent shall exercise his/her responsibilities for personnel matters in accordance with the constitution and laws of the state.

7. - 9. ...

AUTHORITY NOTE: Promulgated in accordance with R.S. 17:21(C), R.S. 17:6(B), R.S. 17:21(B), R.S. 17:21(D), R.S. 17:21(A), R.S. 17:1990, R.S. 17:24(A), R.S. 17:24(B), R.S. 17:24(C), R.S. 17:24(D), R.S. 17:22(2)(f), R.S. 36:645, R.S. 17:22(6), R.S. 17:88(B), R.S. 17:88(D), R.S. 17:92, R.S. 17:10.6(A)(2),R.S. 17:3983), R.S. 17:43, R.S. 17:1945, R.S. 36:642(C)(1), and R.S. 36:648.1.

HISTORICAL NOTE: Promulgated by the Board of Elementary and Secondary Education, LR 34:410 (March 2008), amended LR 37:886 (March 2011), amended LR 38:

§311. The Special School District

A. Functions of the Special School District

1. The Special School District is an educational service agency administered by the LDE that includes the Louisiana special schools (Louisiana Schools for the Deaf and Visually Impaired and the Louisiana Special Education Center) and the Special School Programs. The Special School District is available to all eligible students regardless of their place of residence within the state.

a. The Louisiana Special Schools (Louisiana Schools for the Deaf and Visually Impaired, and Louisiana Special Education Center) are state-operated schools providing educational programs and services for residential and/or day students. The Louisiana Special Schools are established to provide a free appropriate public education for children with low incidence disabilities who meet the admission criteria (i.e., deaf, blind, orthopedically impaired) for each such special school and who are enrolled in such special school.

b. The Special School Programs provide educational services to students enrolled in state approved programs in non-traditional settings such as those provided by the Office of Citizens with Developmental Disabilities, the Office of Behavioral Health, the Office of Juvenile Justice, and the Department of Public Safety and Corrections.

B. Administration

1. The Special School District shall be under the administration and supervision of a superintendent of the Special School District. The superintendent of the Special School District shall exercise all duties and functions under the direct supervision and control of the state superintendent.

AUTHORITY NOTE: Promulgated in accordance with R.S. 17:6(A)(10), R.S. 17:4.1, R.S. 17:6(B), R.S. 17:43, R.S. 17:1945, R.S. 36:642(C)(1), and R.S. 36:648.1.

HISTORICAL NOTE: Promulgated by the Board of Elementary and Secondary Education, LR 34:412 (March 2008), amended LR 38:

§313. The Recovery School District

A. Establishment

1. The Recovery School District is established as an intermediate educational unit administered by the LDE, subject to the approval of the board, to provide an appropriate education for children attending any public elementary or secondary school operated under the jurisdiction and direction of any city, parish, or other local public school board or any other public entity, which has been transferred to its jurisdiction pursuant to R.S. 17:10.5 or 10.7.

B. Organization and Administration of the Recovery School District

1. The Recovery School District shall be administered by the LDE, subject to the approval of the board.

2. The board shall oversee the administration of the Recovery School District, with such administration subject to board approval through the policies it prescribes.

3. The overall administrative organization of the Recovery School District consists of the board in the exercise of its approval over the administration of the Recovery School District, the state superintendent acting as the Recovery School District's governing authority consistent with authority delegated by the board and statutory authority acknowledged by the board, and a superintendent of the Recovery School District.

4. The Recovery School District shall be administered by a superintendent, who shall report to the state superintendent. The responsibilities and duties of the Recovery School District superintendent shall be prescribed by the state superintendent.

C. Policies and Procedures for the Recovery School District

1. Policies for the board's administrative oversight of the Recovery School District shall be adopted by BESE and set forth in the Recovery School District Bulletin. Administrative oversight shall include, but not be limited to, policy governing activities that will ensure the purpose and functions of the Recovery School District are being achieved, fiscal responsibilities are being met, community involvement is sought, property is managed and developed under uniform and established guidelines, student progress is measured and corrective action is taken, when necessary, district progress is measured in all essential areas and corrective action is taken, when necessary, reporting and planning measures are defined, compliance with law and board policy exists, charter school oversight exists, and the Recovery School District plan is being fulfilled.

2. Procedures for the operation of the schools within the Recovery School addressing the day-to-day operation of schools by the Recovery School District shall be adopted by the state superintendent and set forth in the *Recovery School District Handbook* and supplements thereto. The state superintendent shall report on such procedures adopted, as required by the board. The board shall have the authority to review and provide guidance on procedures adopted by the superintendent and shall have the authority to direct the amendment of a procedure the board determines is in violation of law or policy. Operational procedures shall include, but not be limited to, instructional program; human resource and employment policies; rules governing student conduct, rights, and responsibilities; fiscal management; business management; school facility use and maintenance; district and student records; public and educational agency relations; and any procedure required by the RSD bulletin.

3. The Recovery School District shall be subject to a *BESE* Charter School Bulletin to the extent that it is applicable to the charter schools under its jurisdiction.

AUTHORITY NOTE: Promulgated in accordance with R.S. 17:6(A)(10), R.S. 17:6(B), and R.S. 36:651(F).

HISTORICAL NOTE: Promulgated by the Board of Elementary and Secondary Education, LR 34:413 (March 2008), amended LR 36:2851 (December 2010), LR 38:

§315. Board Staff

A. - D. ...

E. In general, duties of the staff include the following:

1. provide professional staffing functions for all committees of the board, including the appellate functions related to the quasi-judicial actions of the board acting as the administrative agency of last resort prior to regular judicial proceedings;

2. - 3. ...

4. provide staffing services to advisory councils established by the board and educational commissions established by the legislature. The board staff shall serve as secretariat to the advisory councils of the board. Secretarial services shall include the preparation of agenda and minutes, both of which shall be prepared according to regular office procedures of the board. The executive director shall supply each advisory council with a staff person who shall serve as an aide to the chair of the council and serve as a representative of the executive director for the purpose of coordinating activities of the advisory councils and the committees of the board;

5. - 7. ...

8. develop charter school policy and monitor the LDE's implementation of policy and its oversight of the charter schools authorized by BESE;

9. - 10. ...

F. Staff assistance from employees of the LDE may be secured for advisory councils only at the direction of the State Superintendent of Education.

G. ...

AUTHORITY NOTE: Promulgated in accordance with R.S. 17:6(A)(15), R.S. 17:6(A)(10), R.S. 17:3(D), Article VII § 10.1, R.S. 17:3801, and R.S. 17:3981.

HISTORICAL NOTE: Promulgated by the Board of Elementary and Secondary Education, LR 34:415 (March 2008), amended LR 38:

Chapter 5. Organization

§501. Committees

A. - B.1. ...

a. Primary areas of responsibility (AOR):

i. - iii.(a) ...

iv. Nonpublic school management;

(a) - (b). ...

b. Issues included on "as needed" basis in AOR:

1.b.i. - 2. ...

a. Primary areas of responsibility (AOR):

2.a.i. - 3. ...

a. Primary areas of responsibility (AOR):

i. ...

(a). certification revocations

(b). records reviews for:

(i). certification denials

(ii). revocations due to felony convictions

(iii). revocations due to submission of fraudulent documents;

(c). policy concepts

B.3.a.ii. - 4.b.i. ...

AUTHORITY NOTE: Promulgated in accordance with R.S. 17:6(A)(10).

HISTORICAL NOTE: Promulgated by the Board of Elementary and Secondary Education, LR 34:415 (March 2008), amended LR 35:223 (February 2009), LR 35:1874 (September 2009), amended LR 36:2851 (December 2010), LR 37:2139 (July 2011), LR 38:

§503. Advisory Councils

A. - C.3.a. ...

b. Membership: 24 members as follows:

i. two city, parish, or other local public school superintendents recommended by each board member. It is recommended that the composition reflect all sizes of systems and be equitable in the regions represented, to the extent possible;

ii. - iii. ...

iv. Repealed.

v. - c.i. ...

ii. Recommendations from the superintendents' advisory council shall go to the appropriate board committee. The LDE shall provide responses to the various recommendations.

C.4. - F.1. ...

2. Vacancies. A vacancy in an appointed position shall occur if an appointee, for any reason, is unable to serve the full extent of his/her term. Appointments to fill vacancies shall be considered interim appointments.

3. - 5. ...

6. Attendance Policy

a. Appointed members are expected to attend all scheduled meetings of an advisory body. Unless otherwise provided, if a member is unable to attend a meeting, a request for an excused absence should be submitted to the council chair or the executive director one week prior to the meeting and a proxy may be named by the appointed member to serve for a total of three meetings. A council member shall be removed and his/her seat declared vacant if he/she is no longer a legal resident of Louisiana, fails to remain active in or is no longer employed by the organization or agency he/she was appointed to represent, or misses more than two meetings, unless excused prior to the meeting by the council chair.

F.6.b. - G.3. ...

4. In accordance with Act 131 of the 2008 Regular Legislative Session, the agenda may be amended upon unanimous approval of the members present at a meeting and subject to other provisions of the Act.

5. In all particulars, except for those listed in these rules and procedures, the business in advisory councils shall be conducted according to *Robert's Rules of Order*.

6. Every motion passed by an advisory council, whether or not made as a recommendation, shall be made as a main motion and must be seconded. All motions must be voted on and roll call votes may be requested by any of the membership in attendance at a meeting.

a. Requests from advisory councils for data/reports must be made in the form of a motion, requesting that the board direct the LDE or BESE staff to provide such information to the council making the request.

7. The minutes and reports of each advisory council shall be presented to the board's executive director for referral to the board. Actions taken in response to referrals shall be forwarded to the appropriate committee(s). A committee, after consideration of the recommendations of the advisory council, shall report its recommendations to the board for final action.

8. All meetings of advisory councils shall be considered official functions of the board to assist in the execution of board responsibilities and duties.

AUTHORITY NOTE: Promulgated in accordance with R.S. 17:6(A)(10), R.S. 17:6(A)(15), R.S. 17:24.4, and R.S. 17:11.

HISTORICAL NOTE: Promulgated by the Board of Elementary and Secondary Education, LR 34:416 (March 2008), amended LR 35:1874 (September 2009), LR 36:2851 (December 2010), LR 37:2140 (July 2011), LR 38:772 (March 2012), LR:38:

Chapter 7. Operations

§703. Regular and Special Meeting Schedules

A. ...

B. The board and committee meeting schedules for future calendar years are submitted to the board for approval in October .

C. - H.2. ...

AUTHORITY NOTE: Promulgated in accordance with R.S. 17:3(E), R.S. 17:6(A)(10), and Article VIII, Section 5(D).

HISTORICAL NOTE: Promulgated by the Board of Elementary and Secondary Education, LR 34:420 (March 2008), amended LR 35:1874 (September 2009), LR 37:2141 (July 2011), LR 38:

§705. Agenda

A. - B.3. ...

C. Amending Board or Committee Agenda. In accordance with Act 131 of the 2008 Regular Legislative Session, the agenda may be amended upon unanimous approval of the members present at a meeting and subject to other provisions of the Act.

D. Distribution and Posting of the Agenda. The agenda for board and committee meetings shall be distributed to board members at least 10 days prior to the meeting date and posted on the web at http://www.louisianaschools.net.

AUTHORITY NOTE: Promulgated in accordance with R.S. 17:6(A)(10).

HISTORICAL NOTE: Promulgated by the Board of Elementary and Secondary Education, LR 34:420 (March 2008), amended LR 37:2141 (July 2011), LR 38:

§709. Board and Committee Meeting Protocol

A. - C.4.…

D. Rules of Conduct

1. ...

2. The presiding officer or chair should be cognizant of the schedule for board and committee work and attempt to conduct business within the time allotted. The presiding officer or chair shall have the right to limit, in time, the length of discussion on each motion, if time is of a critical nature.

3. It is the responsibility of the presiding officer or chair to direct the orderly meeting discussion. The presiding officer or chair, as an individual member, has the same right to discussion as any other member, but the impartiality required of the presiding officer in a discussion precludes his/her exercising these rights while he/she is presiding. If the presiding officer or chair wishes to make lengthy comments he/she should relinquish the chair, secure recognition, and participate. It is requested that any remarks that the presiding officer or chair wishes to make concerning an issue be made after all other members have been recognized.

4. LDE personnel should condense all presentations as much as possible and only in special instances should these presentations exceed 30 minutes.

5. An individual board member may request from the LDE any public document, which has already been prepared or is in a readily available form.

6. ...

7. Persons other than board members, the executive director, staff persons assigned to the committee, or the state superintendent should not be on the dais while business is being conducted.

8. ...

9. Private discussions among board member(s), staff, or the state superintendent should occur away from the designated meeting area. The audience is asked to go outside the meeting room to conduct personal discussions.

10. ...

11. Cell phones and other electronic devices must be turned off or taken to the side rooms for conversations, when activated.

12. ...

13. When a member feels the rules are being violated as to procedure, the member may make a Point of Order request to the presiding officer, calling for a ruling and an enforcement of the regular rules. A Point of Order request shall follow procedures in *Robert's Rules of Order*.

AUTHORITY NOTE: Promulgated in accordance with R.S. 17:6(A)(10), R.S. 42:13, R.S. 17:3(C), R.S. 42:14, and R.S. 42:16.

HISTORICAL NOTE: Promulgated by the Board of Elementary and Secondary Education, LR 34:421 (March 2008), amended LR 37:2141 (July 2011), LR 38:

§711. Order of Business for Board Meetings

A. ...

B. The proposed agenda shall be adopted as the official order of business for the meeting, including unfinished business from the preceding meeting and any emergency items, as publicly noted. The agenda adopted shall not include any items that have not been posted pursuant to §701.B and the Louisiana Open Meetings Law, unless amended pursuant to §705.C.

C. - F. ...

AUTHORITY NOTE: Promulgated in accordance with R.S. 17:6(A)(10).

HISTORICAL NOTE: Promulgated by the Board of Elementary and Secondary Education, LR 34:422 (March 2008), amended LR 38:

§713. Public Comments

A. To carry on its business in an orderly and efficient manner, the board utilizes committees. Full discussion of board business usually occurs at the committee level, and public comment should ideally be at that time, rather than after a recommendation has been forwarded to the board. Opportunity to comment publicly on a committee or board agenda item shall be provided to a representative number of proponents and opponents according to the following procedures.

1. - 2. ...

3. The presiding officer or chair shall have the right to limit, in time, the length of public comment on each motion, if time is of a critical nature.

4. - 9. ...

AUTHORITY NOTE: Promulgated in accordance with R.S. 17:6(A)(10) and R.S. 42:14.

HISTORICAL NOTE: Promulgated by the Board of Elementary and Secondary Education, LR 34:422 (March 2008), amended LR 36:59 (January 2010), LR 37:2141 (July 2011), LR 38:

§717. Electronic Recordings

A. Electronic recordings are made of all official meetings of the board, its committees, and its advisory councils.

AUTHORITY NOTE: Promulgated in accordance with R.S. 17:6(A)(10).

HISTORICAL NOTE: Promulgated by the Board of Elementary and Secondary Education, LR 34:423 (March 2008), amended LR 38:

§719. Minutes

A. - C. ...

D. A committee or board member may request that his/her views on individual items become part of the committee or board meeting minutes. To become part of the committee minutes, such views must be expressed at the committee meeting. To become part of the board minutes, such views must be expressed at the board meeting or must be presented to the board recorder, in writing, within three working days after the board meeting.

E. ...

AUTHORITY NOTE: Promulgated in accordance with R.S. 42:20.

HISTORICAL NOTE: Promulgated by the Board of Elementary and Secondary Education, LR 34:423 (March 2008), amended LR 37:2142 (July 2011), LR 38:

§725. Rules for Board Tenure Hearings

Repealed.

AUTHORITY NOTE: Promulgated in accordance with Article VIII, Section 3(A); R.S. 17:43, 17:45; 42:6.1.A.; and 49:950, et seq.

HISTORICAL NOTE: Promulgated by the Board of Elementary and Secondary Education, LR 35:1471 (August 2009), repealed LR 38:

Chapter 9. Equal Employment

§901. Equal Employment Opportunity; Affirmative Action

A. In compliance with all applicable federal and state laws and regulations (including, but not limited to, Title VII of the Civil Rights Act of 1964), the Board of Elementary and Secondary Education upholds the following policy: This is an equal opportunity agency and is dedicated to a policy of nondiscrimination in employment in all agencies and institutions under its direct supervision. Applicants and employees will not be discriminated against on the basis of race, color, creed, national origin, sex, religion, age, handicap, or any other non-merit factor in any aspect of employment such as recruitment, hiring, promotion, retention, tenure, discharge, layoff, compensation, leave, fringe benefits, training, or any other employment practice or benefit.

B. ...

AUTHORITY NOTE: Promulgated in accordance with R.S. 17:6(A)(10).

HISTORICAL NOTE: Promulgated by the Board of Elementary and Secondary Education, LR 34:423 (March 2008), amended LR 38:

§903. Civil Rights Compliance and Assurances

A. In compliance with all applicable federal and state laws and regulations (including, but not limited to, Title VI of the Civil Rights Act of 1964; Title IX of the Education Amendments of 1972; §504 of the Rehabilitation Act of 1973), the Board of Elementary and Secondary Education upholds the following policy:

> This is an equal opportunity agency and is dedicated to a policy of nondiscrimination in all programs or activities under its direct jurisdiction including city, parish, or other local public school systems or other entities receiving state or federal financial assistance through the board. No one will be discriminated against in any employment practice or in any educational program or activity on the basis of race, color, creed, national origin, sex, religion, age, handicap, or any other non-merit factor.

B. - G. ...

AUTHORITY NOTE: Promulgated in accordance with R.S. 17:6(A)(10).

HISTORICAL NOTE: Promulgated by the Board of Elementary and Secondary Education, LR 34:424 (March 2008), amended LR 38:

Chapter 11. Finance and Property

§1101. Projects and Facilities

A. Capital Projects

1. All requests for new capital construction or renovation projects submitted by board entities, including the Special School District, and the Recovery School District, shall comply with all applicable state laws, all applicable regulations issued by the Division of Administration, and all BESE policy.

2. Requests for capital projects from the Special School District shall be submitted to the superintendent of the Special School District.

3. All requests for any given fiscal year shall be prioritized by the Louisiana Department of Education, and the LDE shall present the priority listing of projects to the board. The board shall approve all capital construction or renovation projects and the priority of the requests prior to submission to the executive and legislative branches of government or prior to implementation of a project, as applicable.

B. - B.2. ...

AUTHORITY NOTE: Promulgated in accordance with R.S. 17:6(A)(10).

HISTORICAL NOTE: Promulgated by the Board of Elementary and Secondary Education, LR 34:424 (March 2008), amended LR 38:

§1103. Purchasing, Auditing, and Contracts for Professional Services

A. - B.1. ...

2. Once the Office of the Legislative Auditor has issued a report on the operations of an entity under the board's jurisdiction, it shall be the responsibility of the LDE to provide the board with a complete analysis of the report and to recommend corrective actions to be taken, when necessary.

B.3. - C.2. ...

3. The state superintendent shall recommend to the board for approval all contracts for professional/consulting services negotiated by the RSD in accordance with board policy.

AUTHORITY NOTE: Promulgated in accordance with R.S. 17:6(A)(10).

HISTORICAL NOTE: Promulgated by the Board of Elementary and Secondary Education, LR 34:424 (March 2008), amended LR 38:

§1105. Budgets

A. General Policies

1. The LDE, including the Special School District and the Recovery School District, and all entities under the jurisdiction of the board shall submit all budget requests for all funds (state, federal, self-generated, etc.) to the board for review and approval. The entities shall be responsible for complying with all state laws and regulations regarding budget submission to the executive and legislative branches of government.

2. In approving budgets for the LDE and entities under the board's jurisdiction, the board shall be guided by all state plans adopted for the purpose of administering federal and state funded programs.

B. Budget Submission. The LDE, including the Special School District and the Recovery School District, and entities under the jurisdiction of the board shall submit their budgets to the board in a timely manner for approval prior to submission to the Division of Administration and legislative offices.

C. Budget Forms. The LDE, including the Special School District and the Recovery School District, and entities under the jurisdiction of the board shall submit their budgets on the forms prescribed by the Division of Administration.

D. ...

E. Interim Emergency Board. Prior to the submission of a request for funding from the Interim Emergency Board of the legislature, the LDE, including the Special School District and the Recovery School District, and entities under the jurisdiction of the board shall complete requests on forms prescribed by the Interim Emergency Board and shall receive approval for submission by the board. Submissions to the Interim Emergency Board shall be in compliance with all rules promulgated by that board.

AUTHORITY NOTE: Promulgated in accordance with R.S. 17:6(A)(10).

HISTORICAL NOTE: Promulgated by the Board of Elementary and Secondary Education, LR 34:425 (March 2008), amended LR 38:

§1107. Minimum Foundation Program

A. - A.1.b. ...

2. Local Responsibility

a. It shall be the responsibility of parish/city and other local school systems, recovery school district schools, and LSU and Southern Lab schools to submit to the Louisiana Department of Education in a timely manner all necessary and required information for the computation of an individual allocation from the minimum foundation formula. This information shall be submitted to the LDE in the form required by the LDE. It shall also be the responsibility of all parish/city and other local school systems, recovery school district schools, and LSU and Southern Lab schools to follow all circulars issued by the LDE providing instructions for the preparation of the required data and other instructions regarding the computation of an allotment from the formula.

B. - B.1. ...

C. MFP—Student Membership Definition

1. Definition. For state reporting for public education for the purpose of establishing the base student count for state funding, each parish/city and other local school system, recovery school district school, LSU and Southern Lab school, Office of Juvenile Justice school, New Orleans Center for Creative Arts (NOCCA), Louisiana School for Math, Science, and the Arts (LSMSA), Special School District (SSD), Louisiana School for the Deaf and Visually Impaired (LSDVI), and the Student Scholarships for Educational Excellence Program (SSEEP) shall adhere to the following.

a. - b.i. ...

ii. all students, including special education students who meet the following criteria will be included in the base student membership count:

(a). have registered or pre-registered on or before student count dates designated in the current adopted MFP resolution. (If student count date(s) falls on a Saturday, report membership on the previous Friday. If student count date(s) falls on a Sunday, report membership on the following Monday.);

(b). are actively attending school (All current state laws and BESE policies concerning attendance should be carefully followed. Appropriate documentation [either written or computer documents] such as dates of absences, letters to parents, notification to child welfare and attendance officers should be placed in individual permanent records for any students who may have absences which raise questions about the student's active attendance.);

ii.(c). - x. ...

D. MFP—Add-on Students/Units

1. Required Data. For purposes of establishing the data sets used in determining the add-on students/units, the following will be adhered to.

a. At-Risk Student Count shall be determined by the number of students whose family income is at or below income eligibility guidelines or other guidelines as provided by BESE and the number of students identified as English Language Learners (ELL) that were not included based on income eligibility guidelines. The current income eligibility guidelines include those students qualifying to participate in the federal free and reduced price breakfast and lunch program. The Fall count is determined by the number of students qualifying for the free and reduced price lunch program and those ELL students not included on income eligibility guidelines during the month of October as reported in the Student Information System (SIS). For any additional required count date(s), the at-risk student count will be those qualifying for free and reduced lunch and those ELL students not included on income eligibility guidelines as reported in SIS, as of that count date.

b. - e. ...

AUTHORITY NOTE: Promulgated in accordance with Art. VIII §13 and R.S. 17:7.

HISTORICAL NOTE: Promulgated by the Board of Elementary and Secondary Education, LR 34:425 (March 2008), amended LR 37:1142 (April 2011), LR 37:3219 (November 2011), LR 38:

Chapter 13. Regulatory Documents

§1303. Rulemaking

A. *Rule*—each agency statement, guide, or requirement for conduct or action, exclusive of those regulating only the internal management of the agency and those purporting to adopt, increase, or decrease any fees imposed on the affairs, actions, or persons regulated by the agency, which has general applicability and the effect of implementing or interpreting substantive law or policy, or which prescribes the procedure or practice requirements of the agency. *Rule* includes, but is not limited to, any provision for fines, prices or penalties, the attainment or loss of preferential status, and the criteria or qualifications for licensure or certification by an agency. A *rule* may be of general applicability even though it may not apply to the entire state, provided its form is general and it is capable of being applied to every member of an identifiable class. The term includes the amendment or repeal of an existing rule but does not include declaratory rulings or orders or any fees.

B. ...

C. The following process must be followed for adoption of a new policy, the amendment of an existing policy, or the repeal of an existing policy.

1. ...

2. Following Approval of a Proposed Rule to be advertised as a Notice of Intent

a. The appropriate LDE/BESE staff is requested to submit a Fiscal and Economic Impact Statement (FEIS), Family Impact Statement, Small Business Statement, proposed policy language, present policy language (if there is a policy already in existence), and comparison language (if applicable) to the board recorder for processing.

b. - e. ...

f. In the event that substantive changes are made to the Notice of Intent as a result of the public comments received, the board can choose to:

i. approve for final adoption only those Sections that will not be changed as a result of the public comments and re-advertise as Notice of Intent only those Sections requiring substantive change; or

C.2.f.ii. - D. ...

E. *Louisiana Administrative Code,* Title 28, Part Numbers XI, ad infinitum, have been reserved for board and LDE bulletins.

F. ...

AUTHORITY NOTE: Promulgated in accordance with R.S. 17:6(A)(10), R.S. 49:951 et seq.

HISTORICAL NOTE: Promulgated by the Board of Elementary and Secondary Education, LR 34:426 (March 2008), amended LR 37:3220 (November 2011), LR 38:

Family Impact Statement

In accordance with Section 953 and 974 of Title 49 of the Louisiana Revised Statutes, there is hereby submitted a Family Impact Statement on the Rule proposed for adoption, repeal or amendment. All Family Impact Statements shall be kept on file in the state board office which has adopted, amended, or repealed a Rule in accordance with the applicable provisions of the law relating to public records.

1. Will the proposed Rule affect the stability of the family? No.

2. Will the proposed Rule affect the authority and rights of parents regarding the education and supervision of their children? No.

3. Will the proposed Rule affect the functioning of the family? No.

4. Will the proposed Rule affect family earnings and family budget? No.

5. Will the proposed Rule affect the behavior and personal responsibility of children? No.

6. Is the family or a local government able to perform the function as contained in the proposed Rule? Yes.

Small Business Statement

The impact of the proposed Rule on small businesses as defined in the Regulatory Flexibility Act has been considered. It is estimated that the proposed action is not expected to have a significant adverse impact on small businesses. The agency, consistent with health, safety, environmental and economic welfare factors has considered and, where possible, utilized regulatory methods in the drafting of the proposed Rule that will accomplish the objectives of applicable statutes while minimizing the adverse impact of the proposed Rule on small businesses.

Public Comments

Interested persons may submit written comments via the U.S. Mail until 4:30 p.m., September 19, 2012, to Nina A. Ford, State Board of Elementary and Secondary Education, P.O. Box 94064, Capitol Station, Baton Rouge, LA 70804-9064.

Catherine R. Pozniak
Executive Director

FISCAL AND ECONOMIC IMPACT STATEMENT FOR ADMINISTRATIVE RULES
RULE TITLE: Technical Revisions and Updates

I. ESTIMATED IMPLEMENTATION COSTS (SAVINGS) TO STATE OR LOCAL GOVERNMENT UNITS (Summary)

The changes to Louisiana Administrative Code, Title 28, Part I, bring the "BESE Code" into alignment with current law and policy. The Minimum Foundation Program student

membership definition has been changed to include students from the following schools: the Special School District, the Louisiana School for the Deaf and Visually Impaired, and the Student Scholarships for Educational Excellence Program. Funding for these students is being transferred from other areas of the state budget and will now be provided through the Minimum Foundation Program.

This policy change will have no fiscal effect other than an estimated cost of $165 to advertise in the Louisiana Register.

II. ESTIMATED EFFECT ON REVENUE COLLECTIONS OF STATE OR LOCAL GOVERNMENTAL UNITS (Summary)

This action will have no effect on revenue collections of state and local government units.

III. ESTIMATED COSTS AND/OR ECONOMIC BENEFITS TO DIRECTLY AFFECTED PERSONS OR NONGOVERNMENTAL GROUPS (Summary)

This action will have no effect on cost and/or economic benefits to directly affected persons or nongovernmental groups.

IV. ESTIMATED EFFECT ON COMPETITION AND EMPLOYMENT (Summary)

This action will have no effect on competition and employment.

Catherine Pozniak	Evan Brasseaux
Executive Director	Staff Director
1208#029	Legislative Fiscal Office

NOTICE OF INTENT

Student Financial Assistance Commission
Office of Student Financial Assistance

Scholarship/Grant Programs (LAC 28:IV.301, 507, 509, 703, 705, 803, 805, 2103, and 2107)

The Louisiana Student Financial Assistance Commission (LASFAC) announces its intention to amend its Scholarship/Grant rules (R.S. 17:3021-3025, R.S. 3041.10-3041.15, R.S. 17:3042.1, R.S. 17:3048.1, R.S. 17:3048.5 and R.S. 17:3048.6).

This rulemaking amends the definition of "academic year (college)" to include summer sessions.

This rulemaking implements Acts 108 and 215 of the 2012 Regular Session of the Louisiana Legislature to extend the deadline to earn a qualifying score on the ACT or SAT under certain extenuating circumstances and to extend the deadlines for first-time, full-time enrollment and for earning the minimum cumulative grade point average after TOPS award suspension for certain students who join the United States Armed Forces.

This rulemaking makes technical corrections to make all TOPS provisions in the rules consistent with a previous change to the definition of award year (college) that allows use of hours earned in summer sessions and summer intersessions to meet the TOPS requirement to earn at least 24 hours each academic year.

This rulemaking extends the time to submit documentation in support of a student's application for a TOPS award to January 15 immediately following the final deadline for receipt of the student's FAFSA or on-line application.

This rulemaking simplifies the requirements for certain exceptions to the TOPS continuation requirements. (SG13140NI)

Title 28
EDUCATION
Part IV. Student Financial Assistance—Higher Education Scholarship and Grant Programs
Chapter 3. Definitions
§301. Definitions

A. Words and terms not otherwise defined in this Chapter shall have the meanings ascribed to such words and terms in this Section. Where the masculine is used in these rules, it includes the feminine, and vice versa; where the singular is used, it includes the plural, and vice versa.

* * *

Qualified Summer Session—those summer sessions (includes terms and semesters conducted during the summer) for which the student's institution certifies that:

a. the summer session is required in the student's degree program for graduation and the student enrolled for at least the minimum number of hours required for the degree program for the session; or

b. the student can complete his program's graduation requirements in the summer session; or

c. the course(s) taken during the summer session is required for graduation in the program in which the student is enrolled and is only offered during the summer session; or

d. the course(s) taken during the summer session is in a program for a vocational or technical education certificate or diploma or a non-academic undergraduate degree; or

e. for the summer of 2006 only, the student is a displaced student as identified in §2103.G.1 of these rules, whose TOPS award was not paid for one or more semesters during the 2005-2006 academic year; or

f. beginning with the summer of 2010, prior to the beginning of the summer session, the student:

i. has at least 60 academic college credit hours;

ii. has enrolled as a full time student for the summer session; and

iii. has signed a form provided by LOSFA:

(a). requesting payment for the summer session from the student's remaining TOPS eligibility;

(b). stating the student understands that the use of the TOPS award for the summer session reduces the student's TOPS eligibility by one semester or term; and

(c). stating the student understands that the grades earned during the summer session will be included in the student's cumulative grade point average.

* * *

AUTHORITY NOTE: Promulgated in accordance with R.S. 17:3021-3025, R.S. 17:3042.1 and R.S. 17:3048.1.

HISTORICAL NOTE: Promulgated by the Student Financial Assistance Commission, Office of Student Financial Assistance, LR 22:338 (May 1996), repromulgated LR 24:632 (April 1998), amended LR 24:1898 (October 1998), LR 24:2237 (December 1998), LR 25:256 (February 1999), LR 25:654 (April 1999), LR 25:1458 and 1460 (August 1999), LR 25:1794 (October 1999), LR 26:65 (January 2000), LR 26:688 (April 2000), LR 26:1262 (June 2000), LR 26:1601 (August 2000), LR 26:1993, 1999 (September 2000), LR 26:2268 (October 2000), LR 26:2752 (December 2000), LR 27:36 (January 2001), LR 27:284 (March 2001), LR 27:1219 (August 2001), LR 27:1840 (November 2001), LR 27:1875 (November 2001), LR 28:45 (January 2002), LR 28:446 (March 2002), LR 28:772 (April 2002), LR 28:2330, 2331 (November

2002), LR 29:555 (April 2003), LR 29:879 (June 2003), LR 30:1159 (June 2004), LR 30:2015 (September 2004), LR 31:36 (January 2005), LR 31:3112 (December 2005), LR 33:86 (January 2007), LR 33:439 (March 2007), LR 33:1339 (July 2007), LR 33:2612 (December 2007), LR 34:234 (February 2008), LR 34:1388 (July 2008), LR 34:1884 (September 2008), LR 35:228 (February 2009), LR 35:1489 (August 2009), LR 35:1490 (August 2009), LR 36:311 (February 2010), LR 36:490 (March 2010), LR 36:2854 (December 2010), LR 37:1561 (June 2011), LR 37:1562 (June 2011), LR 38:

Chapter 5. Applications, Federal Grant Aid and ACT Test

§507. Final Deadline for Submitting Documentation of Eligibility

A. - B.1. …

2. Beginning with the 2005-2006 academic year (college) through the 2010-11 academic year (college), all documentation and certifications necessary to establish student initial eligibility including, but not limited to, high school and/or college transcripts and certifications, copies of student aid reports, applicant confirmation forms, promissory notes, ACT and/or SAT scores, residency affidavits, proof of citizenship or permanent residency status and other documents that may be utilized in determining eligibility, must be received by LASFAC no later than July 1 immediately following the academic year (college) the student is first eligible for payment of a TOPS award . For example, if a student's initial FAFSA is received no later than July 1, 2007, for that student to receive an award for the 2007-2008 academic year (college), LASFAC must have in its possession all documents relevant to establishing eligibility by July 1, 2008.

3. Beginning with the 2011-12 academic year (college), all documentation and certifications necessary to establish student initial eligibility including, but not limited to, high school and/or college transcripts and certifications, copies of student aid reports, applicant confirmation forms, promissory notes, ACT and/or SAT scores, residency affidavits, proof of citizenship or permanent residency status and other documents that may be utilized in determining eligibility, must be received by LASFAC no later than January 15 immediately following the final deadline for receipt of the student's FAFSA or on-line application. For example, if a student's graduates from high school in May 2011, the final deadline for receipt of the student's FAFSA or on-line application is July 1, 2012, and the deadline for receipt of all documents relevant to establishing eligibility is January 15, 2013.

C. - E. …

AUTHORITY NOTE: Promulgated in accordance with R.S. 17:3021-3036, R.S. 17:3042.1 and R.S. 17:3048.1.

HISTORICAL NOTE: Promulgated by the Student Financial Assistance Commission, Office of Student Financial Assistance, LR 22:338 (May 1996), repromulgated LR 24:635 (April 1998), amended LR 24:1901 (October 1998), repromulgated LR 27:1847 (November 2001), amended LR 28:447 (March 2002), LR 30:1161 (June 2004), LR 30:1471 (July 2004), LR 30:2019 (September 2004), LR 32:2238 (December 2006), LR 33:2357 (November 2007), LR 34:1389 (July 2008), LR 34:1884 (September 2008), LR 36:312 (February 2010), LR 38:

§509. ACT Testing Deadline

A.1. - A.2. …

B.1. The student may substitute an equivalent score, as determined by the comparison tables used by LASFAC, on an equivalent SAT taken on or before the official April test date in the academic year (high school) in which the student graduates. In order to substitute a SAT score, the student must direct the college board to send the score to LOSFA so that the score is electronically reported to LOSFA by the college board within 45 days of the final test date allowed by §509. SAT scores received in any other manner shall not be considered.

2. An eligible non-graduate may substitute an equivalent score, as determined by the comparison tables used by LASFAC, on an equivalent SAT taken before the first day of the semester the student first enrolls in an eligible college or university. In order to substitute an SAT score, the student must direct the college board to send the score to LOSFA so that the score is electronically reported to LOSFA by the college board within 45 days of the final test date allowed by §509. SAT scores received in any other manner shall not be considered.

C. Final ACT Testing Deadline for Reduced Awards

1.a. Beginning with awards made to applicants graduating in academic year (high school) 2000 through 2003, if an applicant does not achieve a qualifying score on the ACT or on the SAT for the TOPS Opportunity Award by the April national ACT test date in the year of the applicant's high school graduation, then the applicant's first qualifying score for any TOPS award obtained on an authorized testing date after the April national ACT test date in the year of the applicant's high school graduation but prior to July 1 of the year of such graduation will be accepted. However, when granting an award to an applicant whose qualifying test score is obtained on an authorized testing date after the date of the applicant's high school graduation but prior to July 1 of the year of such graduation, the applicant's period of eligibility for the award shall be reduced by one semester, two quarters, or an equivalent number of units at an eligible institution which operates on a schedule based on units other than semesters or quarters. Except for an applicant who has qualified for a TOPS-Tech Award on or prior to the April national ACT test date, an applicant will not be allowed to use a test score obtained after the April national ACT test date to upgrade a TOPS award.

b.i. Beginning with awards made to applicants graduating in academic year (high school) 2004 through 2010, if an applicant does not achieve a qualifying score on the ACT or on the SAT for the TOPS Opportunity Award by the April national ACT test date in the year of the applicant's high school graduation, then the applicant's first qualifying score for any TOPS award obtained on an authorized testing date after the April national ACT test date in the year of the applicant's high school graduation but prior to July 1 of the year of such graduation will be accepted. However, when granting an award to an applicant whose qualifying test score is obtained on an authorized testing date after the April national ACT test date in the year of the applicant's high school graduation but prior to July 1 of the year of such graduation, the applicant's period of eligibility for the award shall be reduced by one semester, two quarters, or an equivalent number of units at an eligible institution which operates on a schedule based on units other than semesters or quarters. Except for an applicant who has qualified for a TOPS-Tech Award on or prior to the April national ACT test date, an applicant will not be allowed to use a test score

obtained after the April national ACT test date to upgrade a TOPS award.

ii. Beginning with awards made to applicants graduating in academic year (high school) 2011, if an applicant does not achieve a qualifying score on the ACT or on the SAT for the TOPS Opportunity Award by the April national ACT test date in the year of the applicant's high school graduation, then the applicant's first qualifying score for any TOPS award obtained on an authorized testing date after the April national ACT test date in the year of the applicant's high school graduation but prior to July 1 of the year of such graduation will be accepted or, if the commission determines that the applicant was prevented from taking the test prior to July 1 of the year of graduation due to circumstances beyond the immediate control of the student and attributable to the administration of the test, the applicant's first qualifying score for any TOPS award obtained on an authorized testing date after the April national ACT test date in the year of the applicant's high school graduation but prior to October 1 of the year of such graduation will be accepted. However, when granting an award to an applicant whose qualifying test score is obtained on an authorized testing date after the April national ACT test date in the year of the applicant's high school graduation, the applicant's period of eligibility for the award shall be reduced by one semester, two quarters, or an equivalent number of units at an eligible institution which operates on a schedule based on units other than semesters or quarters. Except for an applicant who has qualified for a TOPS-Tech Award on or prior to the April national ACT test date, an applicant will not be allowed to use a test score obtained after the April national ACT test date to upgrade a TOPS award.

c. For the purpose of the Subsection, the *April national ACT test date* shall be defined as the month of April.

d. Tests taken by an eligible non-graduate after the first day of the semester the student first enrolls in an eligible college or university shall not be accepted.

2.a. Beginning with applicants graduating in academic year (high school) 1997 through 2010, applicants who fail to achieve an ACT or SAT qualifying score prior to July 1 of the year of high school graduation shall not be considered for an award.

b. Beginning with applicants graduating in academic year (high school) 2011, applicants shall not be considered for an award if they fail to achieve a qualifying score on the ACT or on the SAT prior to July 1 of the year of high school graduation, or prior to October 1 of the year of high school graduation, if the commission determines that the applicant was prevented from taking the test prior to July 1 of the year of graduation due to circumstances beyond the immediate control of the student and attributable to the administration of the test.

D. - E. …

AUTHORITY NOTE: Promulgated in accordance with R.S. 17:3021-3036, R.S. 17:3042.1 and R.S. 17:3048.1.

HISTORICAL NOTE: Promulgated by the Student Financial Assistance Commission, Office of Student Financial Assistance, LR 26:1995 (September 2000), amended LR 26:2000 (September 2000), LR 27:36 (January 2001), LR 27:284 (March 2001), repromulgated LR 27:1847 (November 2001), amended LR 30:1161 (June 2004), LR 31:37 (January 2005), LR 38:

Chapter 7. Taylor Opportunity Program for Students (TOPS) Opportunity, Performance, and Honors Awards

§703. Establishing Eligibility

A. - A.4.a. …

b. if the student joins the United States Armed Forces within one year after graduating from an eligible Louisiana or an eligible non-Louisiana high school or from an eligible out of country high school, enroll not later than the semester, quarter or term, excluding summer semesters or sessions immediately following the one-year anniversary of the student's separation from active duty service, including all consecutive periods of reenlistment. Reenlistment at any time during the student's first enlistment shall be considered to be on or prior to the fifth anniversary of the date that the student graduated from high school; or

c. if the student is eligible under the provisions of §703.A.5.d or e, enroll not later than the semester or term, excluding summer semesters or sessions, immediately following the first anniversary of the date the student completes the home study program, which is deemed to be May 31; or

d. if the student is eligible under the provisions of §703.A.5.d or e, and joins the United States Armed Forces within one year of completion of the 12th grade of an approved home study program, enroll not later than the semester, quarter or term, excluding summer semesters or sessions immediately following the one-year anniversary of the student's separation from active duty service, including all consecutive periods of reenlistment. Reenlistment at any time during the student's first enlistment shall be considered to be on or prior to the fifth anniversary of the date that the student graduated from high school; or

A.4.e. - J.4.b.ii. …

AUTHORITY NOTE: Promulgated in accordance with R.S. 17:3021-3025, R.S. 17:3042.1 and R.S. 17:3048.1.

HISTORICAL NOTE: Promulgated by the Student Financial Assistance Commission, Office of Student Financial Assistance, LR 22:338 (May 1996), repromulgated LR 24:636 (April 1998), amended LR 24:1902 (October 1998), LR 24:2237 (December 1998), LR 25:257 (February 1999), LR 25:655 (April 1999), LR 25:1794 (October 1999), LR 26:64, 67 (January 2000), LR 26:689 (April 2000), LR 26:1262 (June 2000), LR 26:1602 (August 2000), LR 26:1996, 1999, 2001 (September 2000), LR 26:2268 (October 2000), LR 26:2753 (December 2000), LR 27:36 (January 2001), LR 27:702 (May 2001), LR 27:1219, 1219 (August 2001), repromulgated LR 27:1850 (November 2001), amended LR 28:772 (April 2002), LR 28:2330, 2332 (November 2002), LR 29:125 (February 2003), LR 29:2372 (November 2003), LR 30:1162 (June 2004), LR 30:1471 (July 2004), LR 30:2019 (September 2004), LR 31:37 (January 2005), LR 31:2213 (September 2005), LR 31:3112 (December 2005), LR 32:2239 (December 2006), LR 33:435 (March 2007), LR 33:2357 (November 2007), LR 33:2612 (December 2007), LR 34:1389 (July 2008), LR 35:228 (February 2009), LR 36:312 (February 2010), LR 36:490 (March 2010), LR 36:2269 (October 2010), LR 36:2855 (December 2010), LR 37:2987 (October 2011), LR 38:354 (February 2012), LR 38:

§705. Maintaining Eligibility

A. - A.6.a.i. …

ii. beginning in the 2008-2009 and through the 2010-2011 academic year (college), in an academic undergraduate program at an eligible college or university, by the end of each academic year (college), earn a total of at least 24 college credit hours as determined by totaling the

earned hours reported by the institution for each semester or quarter in the academic year (college), including any hours earned during an intersession ending during the academic year or immediately following the spring term. These hours shall include remedial course work required by the institution, but shall not include hours earned during qualified summer sessions, summer sessions or intersessions that do not end during the academic year or intersessions that do not immediately follow the spring term or by advanced placement course credits. Unless granted an exception for cause by LASFAC, failure to earn the required number of hours will result in permanent cancellation of the recipient's eligibility; or

iii. beginning in the 2011-2012 academic year (college), in an academic undergraduate program at an eligible college or university, by the end of each academic year (college), earn a total of at least 24 college credit hours as determined by totaling the earned hours reported by the institution for each semester or quarter, intersession and summer session in the academic year (college) (includes any hours earned during any intersession and/or summer session ending before the following fall semester or quarter). These hours shall include remedial course work required by the institution and hours for repeated courses, but shall not include hours by advanced placement course credits, by credit by exam, or through the College-Level Examination Program. Unless granted an exception for cause by the commission, failure to earn the required number of hours will result in permanent cancellation of the recipient's eligibility; or

b. in a program for a vocational or technical education certificate or diploma or a non-academic undergraduate degree at an eligible college or university. Unless granted an exception for cause by LASFAC, failure to will result in permanent cancellation of the recipient's eligibility; or

c. in an academic graduate or professional program at an eligible college or university, by the end of each academic year (college), earn at least the total college credit hours required by the college or university for full time enrollment for each semester or quarter as determined by totaling the earned hours reported by the institution for each semester or quarter, intersession and summer session in the academic year (college) (includes any hours earned during any intersession and/or summer session ending before the following fall semester or quarter). These hours shall not include hours by advanced placement course credits, by credit by exam, or through the College-Level Examination Program. Unless granted an exception for cause by LASFAC, failure to earn the required number of hours will result in permanent cancellation of the recipient's eligibility; or

6.d. - 9. …

B. Students failing to meet the requirements listed in §705.A.7 or §705.A.8.a, b, or c may have their tuition awards reinstated upon regaining "steady academic progress" (see §301) and/or attainment of the required GPA, if the period of ineligibility did not persist for more than two years from the date of loss of eligibility. Students who fail to meet the continuation requirements of 705.A.8.c, but who meet the continuation requirements of §705.A.8.a or b., shall no longer be eligible for the stipend authorized for the Performance and Honors Awards, but shall continue to receive the award amount for the Opportunity Award. If the two-year period is interrupted due to a student's active duty in the United States Armed Forces, the two-year period will be extended for a length of time equal to the student's active duty service.

C. - E.3. …

AUTHORITY NOTE: Promulgated in accordance with R.S. 17:3021-3036, R.S. 17:3042.1 and R.S. 17:3048.1.

HISTORICAL NOTE: Promulgated by the Student Financial Assistance Commission, Office of Student Financial Assistance, LR 22:338 (May 1996), repromulgated LR 24:637 (April 1998), amended LR 24:1904 (October 1998), LR 25:257 (February 1999), LR 25:656 (April 1999), LR 25:1091 (June 1999), LR 26:67 (January 2000), LR 26:688 (April 2000), LR 26:1996 (September 2000), LR 26:2001 (September 2000), repromulgated LR 27:1853 (November 2001), amended LR 28:447 (March 2002), LR 28:772 (April 2002), LR 28:2332 (November 2002), LR 29:2373 (November 2003), LR 30:781 (April 2004), LR 30:1163 (June 2004), LR 30:2019 (September 2004), LR 31:3115 (December 2005), LR 33:437 (March 2007) , LR 34:1390 (July 2008), LR 36:491 (March 2010), LR 36:2856 (December 2010), LR 38:

Chapter 8. TOPS-Tech Award

§803. Establishing Eligibility

A. - A.4.a. …

b.i. if the student joins the United States Armed Forces within one year after graduating from an eligible Louisiana or an eligible non-Louisiana high school or from an eligible out of country high school, enroll not later than the semester, quarter or term excluding summer semesters or sessions, immediately following the one-year anniversary of the student's separation from active duty service, including all consecutive periods of reenlistment. Reenlistment at any time during the student's first enlistment shall be considered to be on or prior to the fifth anniversary of the date that the student graduated from high school; or

c. if the student is eligible under the provisions of §803.A.5.d, enroll not later than the semester or term, excluding summer semesters or sessions, immediately following the first anniversary of the date the student completed the home study program, which is deemed to be May 31; or

d.i. if the student is eligible under the provisions of §803.A.5.d and has joined and is on active duty with the United States Armed Forces within one year of the date the student completed the home study program, which is deemed to be May 31, enroll not later than the semester, quarter or term, excluding summer semesters or sessions, immediately following the one-year anniversary of the student's separation from active duty service, including all consecutive periods of reenlistment. Reenlistment at any time during the student's first enlistment shall be considered to be on or prior to the fifth anniversary of the date that the student graduated from high school; and

A.5. - B.4.b.ii. …

AUTHORITY NOTE: Promulgated in accordance with R.S. 17:3021-3025, R.S. 17:3042.1 and R.S. 17:3048.1.

HISTORICAL NOTE: Promulgated by the Student Financial Assistance Commission, Office of Student Financial Assistance, LR 24:1904 (October 1998), amended LR 24:2237 (December 1998), LR 25:1795 (October 1999), LR 26:65 and 67 (January 2000), LR 26:1602 (August 2000), LR 26:1997 (September 2000), LR 26:2269 (October 2000), LR 26:2754 (December 2000), LR 27:36 (January 2001), LR 27:1220 (August 2001), repromulgated

LR 27:1854 (November 2001), amended LR 28:447 (March 2002), LR 28:773 (April 2002), LR 28:2330 (November 2002), LR 29:554 (April 2003), LR 30:1164 (June 2004), LR 30:2019 (September 2004), LR 31:39 (January 2005), LR 31:3114 (December 2005), LR 33:437 (March 2007), LR 33:2614 (December 2007), LR 35:230 (February 2009), LR 36:491 (March 2010), LR 36:2270 (October 2010), LR 36:2856 (December 2010), LR 38:

§805. Maintaining Eligibility

A. - A.8. …

B. Students failing to meet the requirements listed in §805.A.7 and 8 may have their tuition awards reinstated upon achieving steady academic progress, as defined in §301, and the attainment of the required grade point average, if the period of ineligibility did not persist for more than one year from the date of loss of eligibility. If the one-year period is interrupted due to a student's active duty in the United States Armed Forces, the one-year period will be extended for a length of time equal to the student's active duty service.

C. - D.3. …

AUTHORITY NOTE: Promulgated in accordance with R.S. 17:3021-3036, R.S. 17:3042.1 and R.S. 17:3048.1.

HISTORICAL NOTE: Promulgated by the Student Financial Assistance Commission, Office of Student Financial Assistance, LR 24:1905 (October 1998) amended LR 25:1091 (June 1999), LR 26:68 (January 2000), LR 26:689 (April 2000), LR 26:1997, 2002 (September 2000), repromulgated LR 27:1856 (November 2001), amended LR 28:774 (April 2002), LR 28:2332 (November 2002), LR 29:880 (June 2003), LR 29:2373 (November 2003), LR 30:781 (April 2004), LR 30:1165 (June 2004), LR 30:2019 (September 2004), LR 31:3115 (December 2005), LR 33:438 (March 2007), LR 35:1489 (August 2009), LR 38:

Chapter 21. Miscellaneous Provisions and Exceptions

§2103. Circumstances Warranting Exception to the Initial and Continuous Enrollment Requirements

A. - E.1.c. …

2. Physical Rehabilitation Program

a. Definition. The student/recipient is receiving rehabilitation in a program prescribed by a qualified medical professional and administered by a qualified medical professional.

b. Certification Requirements. The student/recipient must submit:

i. a completed exception request form including the reason for the rehabilitation, dates of absence from class, the necessity of withdrawing, dropping hours, etc., the semester(s) or number of days involved, and any other information or documents; and

ii. a written statement from a qualified medical professional confirming the student/recipient's rehabilitation, and the beginning and ending dates of the rehabilitation.

c. Maximum length of exception—up to four consecutive semesters (six consecutive quarters) per occurrence.

3. Substance Abuse Rehabilitation Program

a. Definition. The student/recipient is receiving rehabilitation in a substance abuse program.

b. Certification Requirements. The student/recipient must submit:

i. a completed exception request form including official college transcripts, the reason for the rehabilitation, dates of absence from class, the necessity of withdrawing, dropping hours, etc., the semester(s) or number of days involved, and any other information or documents; and

ii. a written statement from a qualified professional confirming the student's rehabilitation and the beginning and ending dates of the rehabilitation.

c. Maximum length of exception—up to two consecutive semesters (three consecutive quarters). This exception shall be available to a student only one time.

4.a. Temporary Disability—Student

i. Definition. The student/recipient is recovering from an accident, injury, illness or required surgery.

ii. Certification Requirements. The student/recipient must submit:

(a). a completed exception request form including official college transcripts, the reason for the disability, dates of absence from class, the necessity of withdrawing, dropping hours, etc., the semester(s) or number of days involved, and any other information or documents; and

(b). a written statement from a qualified professional of the existence of a temporary disability, the dates of treatment, and opinions as to the impact of the disability on the student's ability to attend school.

iii. Maximum length of exception—up to four consecutive semesters (six consecutive quarters).

b. Temporary Disability—Student/Recipient's Care of Immediate Family Member

i.(a). Definition. The student/recipient is providing continuous care to his/her immediate family member due to an accident, illness, injury or required surgery.

(b). An immediate family member is his/her spouse, dependent, parent, stepparent, custodian, or grandparent.

ii. Certification Requirements. The student/recipient must submit:

(a). a completed exception request form including official college transcripts, the reason for the disability, dates of absence from class, the necessity of withdrawing, dropping hours, etc., the semester(s) or number of days involved, and any other information or documents; and

(b). a written statement from a qualified professional of the existence of a temporary disability of the immediate family member, and the beginning and ending dates of the doctor's care; and

(c). a statement from a family member or a qualified professional confirming the care given by the student.

iii. Maximum length of exception—up to a maximum of two consecutive semesters (three consecutive quarters).

5. - 5.c. …

6. Exceptional Educational Opportunity

a. Definition. The student/recipient is enrolled in an internship, residency, cooperative work, or work/study program or a similar program that is related to the student's major or otherwise has an opportunity not specifically sponsored by the school attended by the student that, in the opinion of the student's academic dean, will enhance the student's education. Participation in one of the programs

does not qualify as an exception to the initial enrollment requirement.

b. Certification Requirements. The student/recipient must submit:

i. a completed exception request form including official college transcripts; and

ii. a written statement from the college/school official that the applicant is a student at the school/college and that the program is offered or sponsored by the college/school, or a statement from the dean of the college or the dean's designee that the program is related to the student's major and will enhance the student's education. The statements must include the dates of leave of absence, the semester(s) or number of days involved, the beginning and ending dates of the program.

c. Maximum length of exception—up to four semesters (six consecutive quarters) or required program of study.

7. Religious Commitment

a. Definition. The student/recipient is a member of a religious group that requires the student to perform certain activities or obligations which necessitate taking a leave of absence from school.

b. Certification Requirements. The student/recipient must submit:

i. a completed exception request form including official college transcripts, the necessity of withdrawing, dropping hours, etc., the semester(s) or number of days involved, and the length of the religious obligation; and

ii. a written statement from the religious group's governing official evidencing the requirement necessitating the leave of absence including dates of the required leave of absence.

c. Maximum length of exception—up to five consecutive semesters (eight consecutive quarters).

8. - 8.c. …

9. Military Service

a. Definition. The student/recipient is in the United States Armed Forces Reserves or National Guard and is called on active duty status or is performing emergency state service with the National Guard or enlists or reenlists and enters on active duty as a member of the regular United States Armed Forces.

b. Certification Requirements. The student/recipient must submit:

i. a completed exception request form including official college transcripts, the dates of the required leave of absence, necessity of withdrawing, dropping hours, etc., the semester(s) or number of days involved, and the length of duty (beginning and ending dates); and

ii. a written certification from the military including the dates and location of active duty; or

iii. a copy of the military orders or other military documents confirming military service.

c. Maximum length of exception—up to the length of the required active duty service period.

10. - 10.c. …

11. Exceptional Circumstances

a. Definition. The student/recipient has exceptional circumstances, other than those listed in §2103.E.1-10, which are beyond his immediate control and which necessitate full or partial withdrawal from, or non-enrollment in an eligible postsecondary institution.

i. The following situations are not exceptional circumstances:

(a). financial conditions related to a student's ability to meet his or her educational expenses are not a justified reason for failure to meet the hours or continuous enrollment requirement, because TOPS is a merit, rather than need-based award;

(b). dropping a course, failing a course, or withdrawing from school to protect the student's grade point average or because of difficulty with a course or difficulty arranging tutoring;

(c). not being aware of or understanding the requirements;

(d). assumption that advanced standing, or correspondence course work credited outside the academic year would be applied to the hours requirement;

(e). differing scholarship or award requirements for other programs, such as NCAA full-time enrollment requirements;

(f). voluntary withdrawal from school to move out-of-state or pursue other interests or activities;

(g). claims of receipt of advice that is contrary to these rules, public information promulgated by LOSFA, award letters, and the rights and responsibilities document that detail the requirements for full-time continuous enrollment;

(h). failure to provide or respond to a request for documentation within 30 days of the date of the request, unless additional time is requested in writing, LOSFA grants the request, and the requested documentation is provided within the additional time granted;

(i). an involuntary drop, suspension, or withdrawal from enrollment because of academics, scholastics, or failure to attend classes or to comply with institutional regulations;

(j). a suspension or expulsion for misconduct;

(k). an inability to register because of failure to satisfy financial obligations.

ii. All other situations will be assessed at the discretion of LOSFA and subject to appeal to the commission.

b. Certification Requirement. Submit a completed exception request form including a sworn affidavit from the student detailing the circumstances and including the official college transcripts and documentation necessary to support the request for reinstatement.

c. Maximum length of exception—up to the number of semesters or quarters determined to be supported by the request for exception.

F. - G.5.b.iii. …

AUTHORITY NOTE: Promulgated in accordance with R.S. 17:3021-3025, R.S. 17:3042.1, R.S. 17:3048.1 and R.S. 17:3050.1-3050.4.

HISTORICAL NOTE: Promulgated by the Student Financial Assistance Commission, Office of Student Financial Assistance, LR 22:338 (May 1996), amended LR 23:1648 (December 1997), repromulgated LR 24:647 (April 1998), amended LR 24:1916 (October 1998), LR 26:1015 (May 2000), LR 26:2002 (September 2000), LR 27:36 (January 2001), repromulgated LR 27:1866 (November 2001), amended LR 27:1875 (November 2001), LR 28:46 (January 2002), LR 28:449 (March 2002), LR 28:775 (April

2002), LR 28:2330 and 2333 (November 2002), LR 29:126 (February 2003), LR 29:2373 (November 2003), LR 29:2373 (November 2003), LR 30:785 (April 2004), LR 30:1167 (June 2004), LR 31:1060 (May 2005), LR 33:440 (March 2007), LR 35:1233 (July 2009), LR 38:

§2107. Funding and Fees

A. Limitation of Terms Funded. Routine funding for all Scholarship and Grant Programs is limited to the fall, winter and spring school terms.

1. - 2. Repealed.

B. - D. …

AUTHORITY NOTE: Promulgated in accordance with R.S. 17:3021-3036, R.S. 17:3042.1 and R.S. 17:3048.1.

HISTORICAL NOTE: Promulgated by the Student Financial Assistance Commission, Office of Student Financial Assistance, LR 22:338 (May 1996), amended LR 23:1648 (December 1997), repromulgated LR 24:649 (April 1998), amended LR 24:1919 (October 1998), LR 26:1998 (September 2000), repromulgated LR 27:1869 (November 2001), amended LR 28:449 (March 2002), LR 28:777 (April 2002), LR 28:2333 (November 2002), LR 31:40 (January 2005), LR 38:

Family Impact Statement

The proposed Rule has no known impact on family formation, stability, or autonomy, as described in R.S. 49:972.

Small Business Statement

The proposed Rule will have no adverse impact on small businesses as described in R.S. 49:965.2 et seq.

Poverty Statement

The proposed rulemaking will have no impact on poverty as described in R.S. 49:973.

Public Comments

Interested persons may submit written comments on the proposed changes (SG13140NI) until 4:30 p.m., September 10, 2012, to Melanie Amrhein, Executive Director, Office of Student Financial Assistance, P.O. Box 91202, Baton Rouge, LA 70821-9202.

George Badge Eldredge
General Counsel

FISCAL AND ECONOMIC IMPACT STATEMENT FOR ADMINISTRATIVE RULES
RULE TITLE: Scholarship/Grant Programs

I. ESTIMATED IMPLEMENTATION COSTS (SAVINGS) TO STATE OR LOCAL GOVERNMENT UNITS (Summary)

The implementation of changes required by Acts 108 and 215 of the 2012 Regular Legislative Session will result in an increase in TOPS expenditures because they will result in additional students becoming eligible to receive a TOPS Award. The magnitude of the increase is difficult to determine. Act 108, modifies the ACT/SAT deadlines, adding a rather limited waiver process that should not result in more than a very nominal increase in eligible TOPS students. The impact on TOPS expenditures for the Act 215 change that increases the eligibility window for military service members is difficult to determine since it is impossible to determine how many of them will return to college on TOPS after eight or more years in the military. Based on the fact that only three students have been identified since the beginning of the program, it is anticipated that this change will not result in a significant increase in TOPS expenditures.

II. ESTIMATED EFFECT ON REVENUE COLLECTIONS OF STATE OR LOCAL GOVERNMENTAL UNITS (Summary)

There is no impact on state or local governmental revenues.

III. ESTIMATED COSTS AND/OR ECONOMIC BENEFITS TO DIRECTLY AFFECTED PERSONS OR NONGOVERNMENTAL GROUPS (Summary)

A limited number of Louisiana students will now become eligible for TOPS award payments to help finance their postsecondary education.

IV. ESTIMATED EFFECT ON COMPETITION AND EMPLOYMENT (Summary)

Competition and employment will not be affected by the proposed change.

George Badge Eldredge
General Counsel
1208#011

Gregory V. Albrecht
Chief Economist
Legislative Fiscal Office

NOTICE OF INTENT

Tuition Trust Authority
Office of Student Financial Assistance

START Saving Program—Applicable Definitions
(LAC 28:VI.107)

The Louisiana Tuition Trust Authority announces its intention to amend its START Saving Program rules (R.S. 17:3091 et seq.).

This rulemaking implements Act 658 of the 2012 Regular Session of Louisiana Legislature and provide that START Saving Program funds may be used at any college or university that is approved by the United States secretary of education. (ST13141NI)

Title 28
EDUCATION
Part VI. Student Financial Assistance—Higher Education Savings
Chapter 1. General Provisions
Subchapter A. Tuition Trust Authority
§107. Applicable Definitions

A. Words and terms not otherwise defined in these rules shall have the meanings ascribed to such words and terms in this Section. Where the masculine is used in these rules, it includes the feminine, and vice versa; where the singular is used, it includes the plural, and vice versa.

* * *

Eligible Educational Institution (either)—

a. a state college or university or a technical college or institute or an independent college or university located in this state that is approved by the U.S. Secretary of Education to participate in a program under Title IV of the Higher Education Act of 1965 (20 U.S.C. 1088), as amended; or

b. a public or independent college or a university located outside this state that is approved by the U.S. secretary of education to participate in a program under Title IV of the Higher Education Act of 1965 (20 U.S.C. 1088), as amended; or

c. a Louisiana licensed proprietary school, licensed pursuant to R.S. Chapter 24-A of Title 17, and any subsequent amendments thereto and is eligible to participate

in a program under Title IV of the Higher Education Act of 1965 (20 U.S.C. 1088), as amended.

* * *

AUTHORITY NOTE: Promulgated in accordance with R.S. 17:3091-3099.2.

HISTORICAL NOTE: Promulgated by the Tuition Trust Authority, Office of Student Financial Assistance, LR 23:712 (June 1997), amended LR 24:1268 (July 1998), LR 25:1794 (October 1999), LR 26:2260 (October 2000), LR 27:37 (January 2001), LR 27:1222 (August 2001), LR 27:1876 (November 2001), LR 28:450 (March 2002), LR 28:777 (April 2002), LR 28:2334 (November 2002), LR 29:556 (April 2003), LR 30:786 (April 2004), LR 30:1169 (June 2004), LR 30:2302 (October 2004), LR 31:639 (March 2005), LR 32:1433 (August 2006), LR 32:2240 (December 2006), LR 33:443 (March 2007), LR 34:1885 (September 2008), LR 35:1491 (August 2009), LR 38:

Family Impact Statement

The proposed Rule has no known impact on family formation, stability, or autonomy, as described in R.S. 49:972.

Small Business Statement

The proposed Rule will have no adverse impact on small businesses as described in R.S. 49:965.2 et seq.

Poverty Statement

The proposed Rule will have no impact on poverty as described in R.S. 49:973.

Public Comments

Interested persons may submit written comments on the proposed changes (SG13141NI) until 4:30 p.m., September 10, 2012, to Melanie Amrhein, Executive Director, Office of Student Financial Assistance, P.O. Box 91202, Baton Rouge, LA 70821-9202.

George Badge Eldredge
General Counsel

FISCAL AND ECONOMIC IMPACT STATEMENT FOR ADMINISTRATIVE RULES
RULE TITLE: START Saving Program Applicable Definitions

I. ESTIMATED IMPLEMENTATION COSTS (SAVINGS) TO STATE OR LOCAL GOVERNMENT UNITS (Summary)

There are no estimated implementation costs or savings to state or local governmental units.

II. ESTIMATED EFFECT ON REVENUE COLLECTIONS OF STATE OR LOCAL GOVERNMENTAL UNITS (Summary)

Revenue collections of state and local governments will not be affected by the proposed changes.

III. ESTIMATED COSTS AND/OR ECONOMIC BENEFITS TO DIRECTLY AFFECTED PERSONS OR NONGOVERNMENTAL GROUPS (Summary)

School choices for parents and students will be increased thus giving them additional flexibility in selecting the educational option that best fits their future career needs.

IV. ESTIMATED EFFECT ON COMPETITION AND EMPLOYMENT (Summary)

There are no anticipated effects on competition and employment resulting from these measures.

George Eldridge
General Counsel
1208#010

Evan Brasseaux
Staff Director
Legislative Fiscal Office

NOTICE OF INTENT

Department of Environmental Quality
Office of the Secretary

Offset Requirements and Emission Reduction Credits Banking (LAC 33:III.504, 601, 603, 605, 607, 615 and 619) (AQ327)

Under the authority of the Environmental Quality Act, R.S. 30:2001 et seq., and in accordance with the provisions of the Administrative Procedure Act, R.S. 49:950 et seq., the secretary gives notice that rulemaking procedures have been initiated to amend the Air regulations, LAC 33:III.504, 601, 603, 605, 607, 615 and 619 (AQ327).

The Baton Rouge area (i.e., the parishes of Ascension, East Baton Rouge, Iberville, Livingston, and West Baton Rouge) was formerly designated as nonattainment with respect to the 1997 8-hour ozone National Ambient Air Quality Standards (NAAQS) of 0.08 parts per million (ppm). As such, increases of nitrogen oxides (NOX) and volatile organic compounds (VOC) emissions were governed by nonattainment new source review (NNSR) procedures provided by LAC 33:III.504. Under NNSR, prior to the construction of a new major stationary source or a major modification of an existing major stationary source, an owner or operator must obtain offsets for significant increases in emissions of NOX and VOC in the form of emission reduction credits (ERC) banked in accordance with LAC 33:III.Chapter 6.

On November 30, 2011, the U.S. Environmental Protection Agency (EPA) redesignated the Baton Rouge area to attainment of the 1997 ozone NAAQS, effective December 30, 2011. At the same time, EPA approved LDEQ's ozone maintenance plan, which projected no net growth in point source NOX and VOC emissions in the five parish area through 2022. However, another ozone standard, with which the Baton Rouge area is not in compliance, will soon be implemented.

On March 27, 2008, EPA lowered the primary ozone NAAQS from 0.08 ppm to 0.075 ppm. This standard became effective on May 27, 2008. However, on September 16, 2009, the agency announced it would reconsider the NAAQS and therefore delayed implementation of the new standard. On January 19, 2010, EPA proposed that the NAAQS should be set within the range of 0.060 to 0.070 ppm. Then, on September 2, 2011, President Obama "requested that Administrator Jackson withdraw the draft Ozone National Ambient Air Quality Standards." Since the ongoing review of the ozone NAAQS will not be completed for several years, the EPA is now moving ahead with certain required actions to implement the 2008 standard. One such action is to designate areas as either attainment, nonattainment, or unclassifiable.

Based on air quality data from 2008-2010, LDEQ recommended to EPA that East Baton Rouge Parish be designated as nonattainment. By letter dated December 9, 2011, EPA informed LDEQ that, in addition to East Baton Rouge, the agency intends "to designate as nonattainment the parishes of Ascension, Iberville, Livingston, and West Baton Rouge" and "plans to promulgate final ozone

designations in spring of 2012." On April 30, 2012, EPA issued a final rule entitled "Implementation of the 2008 National Ambient Air Quality Standards for Ozone: Nonattainment Area Classifications Approach, Attainment Deadlines and Revocation of the 1997 Ozone Standards for Transportation Conformity Purposes." This Rule formally designated the five parishes as nonattainment, effective July 20, 2012.

This Rule is necessary to ensure that the Baton Rouge area continues to make progress toward attainment of the 2008 ozone NAAQS and to mitigate increases of NOX and VOC emissions consistent with the area's approved ozone maintenance plan.

This Rule will also remove references to the 2005 Attainment Plan and Transport Demonstration SIP and the associated inventory comparisons from Chapter 6. Currently, if the ozone design value for the Baton Rouge area is above the NAAQS for ozone, Chapter 6 requires LDEQ to compare the current total point-source emissions inventory, as defined in LAC 33:III.605.A, to the base line inventory associated with the 2005 Attainment Plan and Transport Demonstration SIP. The outcome of this comparison is used to determine baseline emissions for calculating the surplus emission reduction. However, the 2005 Attainment Plan and Transport Demonstration SIP has since been superseded by the 1997 8-Hour Moderate SIP Revision (Redesignation Package), which was approved by EPA on November 30, 2011 (76 FR 74000). As such, the relationship between the current total point-source emissions inventory and the base line inventory is no longer meaningful.

Finally, this Rule will allow for creditable reductions of criteria pollutants other than NOX and VOC to be banked. EPA promulgated a 1-hour NAAQS for SO2 on June 22, 2010. Based on 2008-2010 monitoring data, LDEQ recommended that the parishes of St. Bernard and West Baton Rouge be designated as nonattainment. Major stationary sources located in these parishes will be subject to the provisions of Chapter 6 for the purpose of utilizing SO2 emission reductions as offsets in accordance with LAC 33:III.504. The basis and rationale for this Rule are to ensure that the Baton Rouge area continues to make progress toward attainment of the 2008 ozone NAAQS, mitigate increases of NOX and VOC emissions consistent with the area's approved ozone maintenance plan, remove references to the 2005 Attainment Plan and Transport Demonstration SIP and the associated inventory comparisons from Chapter 6, and allow for creditable reductions of criteria pollutants other then NOX aned VOC to be banked. This Rule meets an exception listed in R.S. 30:2019(D)(2) and R.S. 49:953(G)(3); therefore, no report regarding environmental/health benefits and social/economic costs is required.

Title 33
ENVIRONMENTAL QUALITY
Part III. Air

Chapter 5. Permit Procedures

§504. Nonattainment New Source Review (NNSR) Procedures and Offset Requirements in Specified Parishes

A. - A.1. …

2. The potential to emit of a stationary source shall be compared to the major stationary source threshold values listed in Subsection L, Table 1 of this Section to determine whether the source is major.

3. The emissions increase that would result from a proposed modification, without regard to project decreases, shall be compared to the trigger values listed in Subsection L, Table 1 of this Section to determine whether a calculation of the net emissions increase over the contemporaneous period must be performed.

a. - d. …

4. The net emissions increase shall be compared to the significant net emissions increase values listed in Subsection L, Table 1 of this Section to determine whether a nonattainment new source review must be performed.

A.5. - D.4. …

5. Emission offsets shall provide net air quality benefit, in accordance with offset ratios listed in Subsection L, Table 1 of this Section, in the area where the NAAQS for that pollutant is violated.

D.6. - F. …

1. Offsets shall be required at the ratio specified in Subsection L, Table 1 of this Section. All emission reductions claimed as offset credit shall be from decreases of the same regulated pollutant or pollutant class (e.g., VOC) for which the offset is required, except that direct PM2.5 emissions or emissions of PM2.5 precursors may be offset by reductions in direct PM2.5 emissions or emissions of any PM2.5 precursor, if such offsets comply with the interprecursor trading hierarchy and ratio established in the approved SIP for a particular nonattainment area.

F.2. - L. …

* * *

M. Offset Requirements in Specified Parishes. Except as provided in Paragraph M.4 of this Section, the provisions of this Subsection shall apply to stationary sources located in the parishes of Ascension, East Baton Rouge, Iberville, Livingston, and West Baton Rouge if the parish's designation with respect to the 8-hour national ambient air quality standard (NAAQS) for ozone is attainment, marginal nonattainment, or moderate nonattainment.

1. New Stationary Sources. The owner or operator of a new stationary source shall provide offsets for potential VOC and NOX emissions in excess of 50 tons per year.

2. Existing Stationary Sources

a. Consideration of the net emissions increase shall be triggered for any physical change or change in the method of operation that would increase emissions of VOC or NOX by 25 tons per year or more, without regard to any project decreases.

b. The owner or operator of an existing stationary source with a potential to emit 50 tons per year or more of VOC shall provide VOC offsets for each physical change or change in the method of operation that would result in a net emissions increase of 25 tons per year or more of VOC.

c. The owner or operator of an existing stationary source with a potential to emit 50 tons per year or more of NOX shall provide NOX offsets for each physical change or change in the method of operation that would result in a net emissions increase of 25 tons per year or more of NOX.

3. Offsets shall be required at a ratio of 1.1 to 1.

4. The provisions of this Subsection shall not apply to any new major stationary source or major modification as defined in Subsection K of this Section.

AUTHORITY NOTE: Promulgated in accordance with R.S. 30:2054.

HISTORICAL NOTE: Promulgated by the Department of Environmental Quality, Office of Air Quality and Radiation Protection, Air Quality Division, LR 19:176 (February 1993), repromulgated LR 19:486 (April 1993), amended LR 19:1420 (November 1993), LR 21:1332 (December 1995), LR 23:197 (February 1997), amended by the Office of Environmental Assessment, Environmental Planning Division, LR 26:2445 (November 2000), LR 27:2225 (December 2001), LR 30:752 (April 2004), amended by the Office of Environmental Assessment, LR 30:2801 (December 2004), amended by the Office of the Secretary, Legal Affairs Division, LR 31:2436 (October 2005), LR 31:3123, 3155 (December 2005), LR 32:1599 (September 2006), LR 33:2082 (October 2007), LR 34:1890 (September 2008), LR 37:1568 (June 2011), LR 38:1232 (May 2012), LR 38:

Chapter 6. Regulations on Control of Emissions through the Use of Emission Reduction Credits (ERC) Banking

§601. Purpose

A. This Chapter establishes the means of enabling stationary sources to identify and preserve or acquire emission reductions for New Source Review (NSR) offsets.

AUTHORITY NOTE: Promulgated in accordance with R.S. 30:2054.

HISTORICAL NOTE: Promulgated by the Department of Environmental Quality, Office of Air Quality and Radiation Protection, Air Quality Division, LR 20:874 (August 1994), amended by the Office of Environmental Assessment, Environmental Planning Division, LR 28:301 (February 2002), amended by the Office of the Secretary, Legal Affairs Division, LR 38:

§603. Applicability

A. Major stationary sources are subject to the provisions of this Chapter for the purpose of utilizing emission reductions as offsets in accordance with LAC 33:III.504. Minor stationary sources located in nonattainment areas may submit ERC applications for purposes of banking. Sources located in EPA-designated attainment areas may not participate in the emissions banking program. Any stationary point source at an affected facility is eligible to participate.

B. Notwithstanding Subsection A of this Section, sources located in the parishes of Ascension, East Baton Rouge, Iberville, Livingston, and West Baton Rouge may participate in the emissions banking program for purposes of securing offsets where required by LAC 33:III.504.M.

AUTHORITY NOTE: Promulgated in accordance with R.S. 30:2054.

HISTORICAL NOTE: Promulgated by the Department of Environmental Quality, Office of Air Quality and Radiation Protection, Air Quality Division, LR 20:874 (August 1994), amended LR 24:2239 (December 1998), amended by the Office of Environmental Assessment, Environmental Planning Division, LR 25:1622 (September 1999), LR 28:301 (February 2002), amended by the Office of the Secretary, Legal Affairs Division, LR 33:2068 (October 2007), LR 38:

§605. Definitions

A. The terms used in this Chapter are defined in LAC 33:III.111 with the exception of those terms specifically defined as follows.

* * *

Bankable Emission Reductions—reductions of a criteria pollutant that meet the provisions of this Chapter at the time of review and approval.

* * *

Base Case Inventory—Repealed.

Base Line Inventory—Repealed.

* * *

Current Total Point-Source Emissions Inventory—Repealed.

* * *

Modeled Parishes—Repealed.

Offset—a legally enforceable reduction, approved by the department, in the rate of actual emissions from an existing stationary point source, which is used to compensate for a significant net increase in emissions from a new or modified stationary source in accordance with the requirements of LAC 33:III.504. To be valid, an offset must meet the definition of ERC.

* * *

AUTHORITY NOTE: Promulgated in accordance with R.S. 30:2054.

HISTORICAL NOTE: Promulgated by the Department of Environmental Quality, Office of Air Quality and Radiation Protection, Air Quality Division, LR 20:874 (August 1994), LR 25:1622 (September 1999), LR 26:2448 (November 2000), LR 28:301 (February 2002), amended by the Office of the Secretary, Legal Affairs Division, LR 33:2068 (October 2007), LR 34:1890 (September 2008), LR 37:3221 (November 2011), LR 38:

§607. Determination of Creditable Emission Reductions

A. - B.2. …

C. Procedures for Calculating the Surplus Emission Reduction. The following procedures shall be used in calculating the quantity of surplus air emission reductions.

1. Reserved.

2. - 3. …

4. Quantify Baseline Emissions. Baseline emissions shall be the lower of actual emissions or adjusted allowable emissions determined in accordance with Paragraph C.3 of this Section.

C.5. - D. …

AUTHORITY NOTE: Promulgated in accordance with R.S. 30:2054.

HISTORICAL NOTE: Promulgated by the Department of Environmental Quality, Office of Air Quality and Radiation Protection, Air Quality Division, LR 20:877 (August 1994), amended by the Office of Environmental Assessment, Environmental Planning Division, LR 25:1622 (September 1999), LR 28:302 (February 2002), amended by the Office of the Secretary, Legal Affairs Division, LR 32:1601 (September 2006), LR 33:2068 (October 2007), LR 38:

§615. Schedule for Submitting Applications

A. …

B. If a parish is designated as nonattainment by the EPA after January 1, 2012, applications for banking ERCs in such parish must be submitted by March 31 of the year following the effective date of the EPA designation.

C. - D. …

AUTHORITY NOTE: Promulgated in accordance with R.S. 30:2054.

HISTORICAL NOTE: Promulgated by the Department of Environmental Quality, Office of Air Quality and Radiation Protection, Air Quality Division, LR 20:878 (August 1994),

amended LR 21:681 (July 1995), amended by the Office of Environmental Assessment, Environmental Planning Division, LR 25:1623 (September 1999), LR 26:486 (March 2000), LR 28:304 (February 2002), amended by the Office of the Secretary, Legal Affairs Division, LR 33:2068 (October 2007), LR 38:

§619. Emission Reduction Credit Bank

A. The department shall maintain a banking database that shall consist of a record of all information concerning applications, deposits, withdrawals, and transactions, as well as pertinent date(s) concerning such information. All data in the banking database shall be available to the public upon request.

B. - C. …

AUTHORITY NOTE: Promulgated in accordance with R.S. 30:2054.

HISTORICAL NOTE: Promulgated by the Department of Environmental Quality, Office of Air Quality and Radiation Protection, Air Quality Division, LR 20:879 (August 1994), amended by the Office of Environmental Assessment, Environmental Planning Division, LR 26:2449 (November 2000), LR 28:305 (February 2002), amended by the Office of the Secretary, Legal Affairs Division, LR 38:

Family Impact Statement

This Rule has no known impact on family formation, stability, and autonomy as described in R.S. 49:972.

Public Comments

All interested persons are invited to submit written comments on the proposed regulation. Persons commenting should reference this proposed regulation by AQ327. Such comments must be received no later than October 3, 2012, at 4:30 p.m., and should be sent to Deidra Johnson, Attorney Supervisor, Office of the Secretary, Legal Division, Box 4302, Baton Rouge, LA 70821-4302 or to fax (225) 219-4068 or by e-mail to deidra.johnson@la.gov. Copies of these proposed regulations can be purchased by contacting the DEQ Public Records Center at (225) 219-3168. Check or money order is required in advance for each copy of AQ327. These proposed regulations are available on the Internet at www.deq.louisiana.gov/portal/tabid/1669/default.aspx.

Public Hearing

A public hearing will be held on September 26, 2012, at 1:30 p.m. in the Galvez Building, Oliver Pollock Conference Room, 602 N. Fifth Street, Baton Rouge, LA 70802. Interested persons are invited to attend and submit oral comments on the proposed amendments. Should individuals with a disability need an accommodation in order to participate, contact Deidra Johnson at the address given below or at (225) 219-3985. Two hours of free parking are allowed in the Galvez Garage with a validated parking ticket.

These proposed regulations are available for inspection at the following DEQ office locations from 8 a.m. until 4:30 p.m.: 602 N. Fifth Street, Baton Rouge, LA 70802; 1823 Highway 546, West Monroe, LA 71292; State Office Building, 1525 Fairfield Avenue, Shreveport, LA 71101; 1301 Gadwall Street, Lake Charles, LA 70615; 111 New Center Drive, Lafayette, LA 70508; 110 Barataria Street, Lockport, LA 70374; 201 Evans Road, Bldg. 4, Suite 420, New Orleans, LA 70123.

FISCAL AND ECONOMIC IMPACT STATEMENT FOR ADMINISTRATIVE RULES
RULE TITLE: Offset Requirements and Emission Reduction Credits Banking

I. ESTIMATED IMPLEMENTATION COSTS (SAVINGS) TO STATE OR LOCAL GOVERNMENT UNITS (Summary)

There are no estimated implementation costs or savings to state or local governmental units as a result of the proposed Rule.

II. ESTIMATED EFFECT ON REVENUE COLLECTIONS OF STATE OR LOCAL GOVERNMENTAL UNITS (Summary)

There is no estimated effect on revenue collections of state or local governmental units as a result of the proposed Rule.

III. ESTIMATED COSTS AND/OR ECONOMIC BENEFITS TO DIRECTLY AFFECTED PERSONS OR NONGOVERNMENTAL GROUPS (Summary)

There will be no costs to directly affected persons or non-governmental groups as a result of the proposed Rule.

IV. ESTIMATED EFFECT ON COMPETITION AND EMPLOYMENT (Summary)

There is no estimated effect on competition or employment in the public or private sector because of the proposed Rule.

Herman Robinson, CPM	Gregory V. Albrecht
Executive Counsel	Chief Economist
1208#068	Legislative Fiscal Office

NOTICE OF INTENT

Department of Environmental Quality
Office of the Secretary
Legal Affairs Division

Addition to List of Exempted Compounds
(LAC 33:III.2117)(AQ335ft)

Under the authority of the Environmental Quality Act, R.S. 30:2001 et seq., and in accordance with the provisions of the Administrative Procedure Act, R.S. 49:950 et seq., the secretary gives notice that rulemaking procedures have been initiated to amend the Air regulations, LAC 33:III.2117.A (Log #AQ335ft).

This Rule is identical to federal regulations found in 40 CFR 51.100, which are applicable in Louisiana. For more information regarding the federal requirement, contact the Regulation Development Section at (225) 219-3985 or Box 4302, Baton Rouge, LA 70821-4302. No fiscal or economic impact will result from the Rule. This Rule will be promulgated in accordance with the procedures in R.S. 49:953(F)(3) and (4).

This Rule adds trans-1,3,3,3-tetrafluoropropene (HFO-1234ze) to the list of compounds exempt from the control requirements of LAC 33:III.Chapter 21.

On June 22, 2012, EPA amended its definition of volatile organic compound (VOC) at 40 CFR 51.100(s) to exclude trans-1,3,3,3-tetrafluoropropene (HFO-1234ze). EPA has found that this compound "makes a negligible contribution to tropospheric ozone formation." The basis and rationale for this rule are to exempt trans-1,3,3,3-tetrafluoropropene

(HFO-1234ze) from being regulated as a VOC under Chapter 21 per amendment by EPA. This Rule meets an exception listed in R.S. 30:2019(D)(2) and R.S. 49:953(G)(3); therefore, no report regarding environmental/health benefits and social/economic costs is required.

Title 33
ENVIRONMENTAL QUALITY
Part III. Air

Chapter 21. Control of Emission of Organic Compounds

Subchapter A. General

§2117. Exemptions

A. The compounds listed in the following table are exempt from the control requirements of this Chapter.

Exempt Compounds
* * *
[See Prior Text in acetone - trifluoromethane (HFC-23)]
trans-1,3,3,3-tetrafluoropropene (HFO-1234ze)

AUTHORITY NOTE: Promulgated in accordance with R.S. 30:2054.

HISTORICAL NOTE: Promulgated by the Department of Environmental Quality, Office of Air Quality and Nuclear Energy, Air Quality Division, LR 13:741 (December 1987), amended LR 16:118 (February 1990), amended by the Office of Air Quality and Radiation Protection, Air Quality Division, LR 20:289 (March 1994), LR 21:681 (July 1995), LR 21:1330 (December 1995), repromulgated LR 22:14 (January 1996), amended LR 22:703 (August 1996), LR 23:1661 (December 1997), LR 24:22 (January 1998), LR 25:258 (February 1999), amended by the Office of Environmental Assessment, LR 31:1062 (May 2005), amended by the Office of the Secretary, Legal Affairs Division, LR 35:924 (May 2009), LR 38:

Family Impact Statement

This Rule has no known impact on family formation, stability, and autonomy as described in R.S. 49:972.

Public Comments

All interested persons are invited to submit written comments on the proposed regulation. Persons commenting should reference this proposed regulation by AQ335ft. Such comments must be received no later than September 26, 2012, at 4:30 p.m., and should be sent to Deidra Johnson, Attorney Supervisor, Office of the Secretary, Legal Division, Box 4302, Baton Rouge, LA 70821-4302 or to fax (225) 219-4068 or by e-mail to deidra.johnson@la.gov. The comment period for this Rule ends on the same date as the public hearing. Copies of this proposed regulation can be purchased by contacting the DEQ Public Records Center at (225) 219-3168. Check or money order is required in advance for each copy of AQ335ft. This regulation is available on the Internet at www.deq.louisiana.gov/portal/tabid/1669/default.aspx.

Public Hearing

A public hearing will be held on September 26, 2012, at 1:30 p.m. in the Galvez Building, Oliver Pollock Conference Room, 602 N. Fifth Street, Baton Rouge, LA 70802. Interested persons are invited to attend and submit oral comments on the proposed amendments. Should individuals with a disability need an accommodation in order to participate, contact Deidra Johnson at the address given below or at (225) 219-3985. Two hours of free parking are allowed in the Galvez Garage with a validated parking ticket.

This proposed regulation is available for inspection at the following DEQ office locations from 8 a.m. until 4:30 p.m.: 602 N. Fifth Street, Baton Rouge, LA 70802; 1823 Highway 546, West Monroe, LA 71292; State Office Building, 1525 Fairfield Avenue, Shreveport, LA 71101; 1301 Gadwall Street, Lake Charles, LA 70615; 111 New Center Drive, Lafayette, LA 70508; 110 Barataria Street, Lockport, LA 70374; 201 Evans Road, Bldg. 4, Suite 420, New Orleans, LA 70123.

Herman Robinson, CPM
Executive Counsel

1208#064

NOTICE OF INTENT

Department of Environmental Quality
Office of the Secretary
Legal Affairs Division

Incorporation by Reference Update
(LAC 33:IX.4901 and 4903)(WQ086ft)

Under the authority of the Environmental Quality Act, R.S. 30:2001 et seq., and in accordance with the provisions of the Administrative Procedure Act, R.S. 49:950 et seq., the secretary gives notice that rulemaking procedures have been initiated to amend the Water Quality regulations, LAC 33:IX.4901 and 4903 (Log #WQ086ft).

This Rule is identical to federal regulations found in 40 CFR 136, 401 and 405-471 along with 40 CFR 136, 260, 423, 430 and 435 and additionally 40 CFR 450, which are applicable in Louisiana. For more information regarding the federal requirement, contact the Regulation Development Section at (225) 219-3985 or Box 4302, Baton Rouge, LA 70821-4302. No fiscal or economic impact will result from the Rule. This Rule will be promulgated in accordance with the procedures in R.S. 49:953(F)(3) and (4).

This Rule changes the reference dates to 40 CFR Part 136 and 40 CFR Chapter I, Subchapter N, Parts 401, 405-471 in the LAC 33:IX, Chapter 49 from July 1, 2009 to July 1, 2012.

LAC 33: IX, Chapter 49 incorporates the following portions of federal regulations into the Louisiana water quality regulations:

1. 40 CFR Part 136, Guidelines Establishing Test Procedures for the Analysis of Pollutants, July 1, 2009, in its entirety; and
2. 40 CFR Chapter I, Subchapter N, Effluent Guidelines and Standards, parts 401 and 405-471, July 1, 2009.

The following updates to federal regulations have occurred that necessitate updating the referenced date:

1. 40 CFR Parts 136, 260, 423, 430, and 435: Guidelines Establishing Test Procedures for the Analysis of Pollutants Under the Clean Water Act, Analysis and Sampling Procedures, Federal Register/Vol. 77, No. 97/May 18, 2012/Rules and Regulations; and
2. 40 CFR Part 450: Effluent Limitations Guidelines and Standards for the construction and Development

Point Source Category, Federal Register/Vol. 74, No. 229/December 1, 2009 (Note: A portion of this Rule was stayed in Federal Register/Vol. 75, No. 214/November 5, 2010/Rules and Regulations).

This action will incorporate the recently updated federal regulations into Louisiana's water quality regulations, increasing the enforceability of LPDES permits that include EPA-approved analytical methods and effluent limitations guidelines. The published edition of the 40 CFR is regularly updated on July 1 of every calendar year; therefore, this Rule will incorporate the date of July 1, 2012 in anticipation of the most recent publication, which will include the above referenced Rules. The basis and rationale for this Rule are to mirror the federal regulations. This Rule meets an exception listed in R.S. 30:2019(D)(2) and R.S. 49:953(G)(3); therefore, no report regarding environmental/health benefits and social/economic costs is required.

Title 33
ENVIRONMENTAL QUALITY
Part IX. Water Quality
Subpart 1. Water Pollution Control

Chapter 49. Incorporation by Reference

§4901. 40 CFR Part 136

A. 40 CFR Part 136, Guidelines Establishing Test Procedures for the Analysis of Pollutants, July 1, 2012, in its entirety, is hereby incorporated by reference.

AUTHORITY NOTE: Promulgated in accordance with R.S. 30:2001 et seq., and in particular Section 2074(B)(3) and (B)(4).

HISTORICAL NOTE: Promulgated by the Department of Environmental Quality, Office of Water Resources, LR 21:945 (September 1995), amended LR 23:958 (August 1997), amended by the Office of Environmental Assessment, Environmental Planning Division, LR 25:1467 (August 1999), LR 26:1609 (August 2000), LR 27:2231 (December 2001), LR 28:996 (May 2002), LR 29:700 (May 2003), repromulgated LR 30:232 (February 2004), amended LR 30:752 (April 2004), amended by the Office of Environmental Assessment, LR 31:920 (April 2005), amended by the Office of the Secretary, Legal Affairs Division, LR 32:604 (April 2006), LR 33:641 (April 2007), LR 34:867 (May 2008), LR 35:1110 (June 2009), LR 36:2275 (October 2010), LR 38:

§4903. 40 CFR, Chapter I, Subchapter N

A. 40 CFR Chapter I, Subchapter N, Effluent Guidelines and Standards, Parts 401 and 405 471, July 1, 2012, are hereby incorporated by reference.

AUTHORITY NOTE: Promulgated in accordance with R.S. 30:2001 et seq., and in particular Section 2074(B)(3) and (B)(4).

HISTORICAL NOTE: Promulgated by the Department of Environmental Quality, Office of Water Resources, LR 21:945 (September 1995), amended LR 23:958 (August 1997), amended by the Office of Environmental Assessment, Environmental Planning Division, LR 25:1467 (August 1999), LR 26:1609 (August 2000), LR 27:2232 (December 2001), LR 28:996 (May 2002), LR 29:700 (May 2003), LR 29:1467 (August 2003), repromulgated LR 30:232 (February 2004), amended LR 30:752 (April 2004), amended by the Office of Environmental Assessment, LR 31:920 (April 2005), amended by the Office of the Secretary, Legal Affairs Division LR 32:604 (April 2006), LR 32:819 (May 2006), LR 33:641 (April 2007), LR 34:867 (May 2008), LR 35:654 (April 2009), LR 35:1110 (June 2009), LR 36:2275 (October 2010), LR 38:

Family Impact Statement

This Rule has no known impact on family formation, stability, and autonomy as described in R.S. 49:972.

Public Comments

All interested persons are invited to submit written comments on the proposed regulation. Persons commenting should reference this proposed regulation by WQ086ft. Such comments must be received no later than September 26, 2012, at 4:30 p.m., and should be sent to Deidra Johnson, Attorney Supervisor, Office of the Secretary, Legal Division, Box 4302, Baton Rouge, LA 70821-4302 or to fax (225) 219-4068 or by e-mail to deidra.johnson@la.gov. The comment period for this Rule ends on the same date as the public hearing. Copies of this proposed regulation can be purchased by contacting the DEQ Public Records Center at (225) 219-3168. Check or money order is required in advance for each copy of WQ086ft. This regulation is available on the Internet at www.deq.louisiana.gov/portal/tabid/1669/default.aspx.

Public Hearing

A public hearing will be held on September 26, 2012, at 1:30 p.m. in the Galvez Building, Oliver Pollock Conference Room, 602 N. Fifth Street, Baton Rouge, LA 70802. Interested persons are invited to attend and submit oral comments on the proposed amendments. Should individuals with a disability need an accommodation in order to participate, contact Deidra Johnson at the address given below or at (225) 219-3985. Two hours of free parking are allowed in the Galvez Garage with a validated parking ticket.

This proposed regulation is available for inspection at the following DEQ office locations from 8 a.m. until 4:30 p.m.: 602 N. Fifth Street, Baton Rouge, LA 70802; 1823 Highway 546, West Monroe, LA 71292; State Office Building, 1525 Fairfield Avenue, Shreveport, LA 71101; 1301 Gadwall Street, Lake Charles, LA 70615; 111 New Center Drive, Lafayette, LA 70508; 110 Barataria Street, Lockport, LA 70374; 201 Evans Road, Bldg. 4, Suite 420, New Orleans, LA 70123.

Herman Robinson, CPM
Executive Counsel

1208#066

NOTICE OF INTENT

Department of Environmental Quality
Office of the Secretary
Legal Affairs Division

Toxic Emissions Reporting Requirements
(LAC 33:III.5301, 5303 and 5307)(AQ333)

Under the authority of the Environmental Quality Act, R.S. 30:2001 et seq., and in accordance with the provisions of the Administrative Procedure Act, R.S. 49:950 et seq., the secretary gives notice that rulemaking procedures have been initiated to amend the Air regulations, LAC 33:III.5301, 5303 and 5307. (AQ333).

This Rule eliminates reporting requirements for several hundred dry cleaning operators, electroplaters and solvent users. The regulation is outdated. There is no longer a need for dry cleaning operators, electroplaters and solvent users to continue to make the reports in the regulation which

originally was in place to collect information for the Periodic Emissions Inventory DEQ sends to EPA. There are now newer, better emissions estimation tools that are used, therefore there is no longer a need for these businesses to continue to report. The basis and rationale for this Rule are to update reporting requirements. This Rule meets an exception listed in R.S. 30:2019(D)(2) and R.S. 49:953(G)(3); therefore, no report regarding environmental/health benefits and social/economic costs is required.

Title 33
ENVIRONMENTAL QUALITY
Part III. Air

Chapter 53. Area Sources of Toxic Air Pollutants

Subchapter A. Toxic Emissions Reporting Requirements

§5301. Applicability

Repealed.

AUTHORITY NOTE: Promulgated in accordance with R.S. 30:2054.

HISTORICAL NOTE: Promulgated by the Department of Environmental Quality, Office of Air Quality and Radiation Protection, Air Quality Division, LR 20:430 (April 1994), amended LR 23:63 (January 1997), repealed by the Office of the Secretary, Legal Affairs Division, LR 38:

§5303. Exemptions

Repealed.

AUTHORITY NOTE: Promulgated in accordance with R.S. 30:2054.

HISTORICAL NOTE: Promulgated by the Department of Environmental Quality, Office of Air Quality and Radiation Protection, Air Quality Division, LR 20:431 (April 1994), repealed by the Office of the Secretary, Legal Affairs Division, LR 38:

§5307. Reporting Requirements

Repealed.

AUTHORITY NOTE: Promulgated in accordance with R.S. 30:2054.

HISTORICAL NOTE: Promulgated by the Department of Environmental Quality, Office of Air Quality and Radiation Protection, Air Quality Division, LR 20:431 (April 1994), amended by the Office of Environmental Assessment, Environmental Planning Division, LR 26:2464 (November 2000), amended by the Office of the Secretary, Legal Affairs Division, LR 31:2450 (October 2005), LR 33:2096 (October 2007), repealed, LR 38:

Family Impact Statement

This Rule has no known impact on family formation, stability, and autonomy as described in R.S. 49:972.

Public Comments

All interested persons are invited to submit written comments on the proposed regulation. Persons commenting should reference this proposed regulation by AQ333. Such comments must be received no later than October 3, 2012, at 4:30 p.m., and should be sent to Deidra Johnson, Attorney Supervisor, Office of the Secretary, Legal Division, Box 4302, Baton Rouge, LA 70821-4302 or to fax (225) 219-4068 or by e-mail to deidra.johnson@la.gov. Copies of these proposed regulations can be purchased by contacting the DEQ Public Records Center at (225) 219-3168. Check or money order is required in advance for each copy of AQ333. These proposed regulations are available on the Internet at www.deq.louisiana.gov/portal/tabid/1669/default.aspx.

Public Hearing

A public hearing will be held on September 26, 2012, at 1:30 p.m. in the Galvez Building, Oliver Pollock Conference Room, 602 N. Fifth Street, Baton Rouge, LA 70802. Interested persons are invited to attend and submit oral comments on the proposed amendments. Should individuals with a disability need an accommodation in order to participate, contact Deidra Johnson at the address given below or at (225) 219-3985. Two hours of free parking are allowed in the Galvez Garage with a validated parking ticket.

These proposed regulations are available for inspection at the following DEQ office locations from 8 a.m. until 4:30 p.m.: 602 N. Fifth Street, Baton Rouge, LA 70802; 1823 Highway 546, West Monroe, LA 71292; State Office Building, 1525 Fairfield Avenue, Shreveport, LA 71101; 1301 Gadwall Street, Lake Charles, LA 70615; 111 New Center Drive, Lafayette, LA 70508; 110 Barataria Street, Lockport, LA 70374; 201 Evans Road, Bldg. 4, Suite 420, New Orleans, LA 70123.

Herman Robinson, CPM
Executive Counsel

FISCAL AND ECONOMIC IMPACT STATEMENT FOR ADMINISTRATIVE RULES
RULE TITLE: Toxic Emissions Reporting Requirements

I. ESTIMATED IMPLEMENTATION COSTS (SAVINGS) TO STATE OR LOCAL GOVERNMENT UNITS (Summary)

The proposed Rule change may result in a minor indeterminable cost savings to the Department of Environmental Quality (DEQ). The proposed administrative Rule eliminates the Toxic Emissions Reporting Requirements that will impact dry cleaning operators, electroplaters and solvent users.

II. ESTIMATED EFFECT ON REVENUE COLLECTIONS OF STATE OR LOCAL GOVERNMENTAL UNITS (Summary)

There is no anticipated direct material effect on state and local governmental revenues as a result of the proposed Rule change.

III. ESTIMATED COSTS AND/OR ECONOMIC BENEFITS TO DIRECTLY AFFECTED PERSONS OR NONGOVERNMENTAL GROUPS (Summary)

The proposed Rule change will likely result in an indeterminable economic benefit to approximately 100 dry cleaning operators, electroplaters and solvent users as these facilities will no longer be required to submit the Toxic Emissions Report to the department.

IV. ESTIMATED EFFECT ON COMPETITION AND EMPLOYMENT (Summary)

There is no estimated effect on competition or employment as a result of the proposed Rule change.

Herman Robinson, CPM
Executive Counsel
1208#067

Gregory V. Albrecht
Chief Economist
Legislative Fiscal Office

NOTICE OF INTENT

Department of Environmental Quality
Office of the Secretary
Legal Affairs Division

Medical Use of Byproduct Material—Authorized User Clarification (LAC 33:XV.763 and 1599)(RP054ft)

Under the authority of the Environmental Quality Act, R.S. 30:2001 et seq., and in accordance with the provisions of the Administrative Procedure Act, R.S. 49:950 et seq., the secretary gives notice that rulemaking procedures have been initiated to amend the Radiation Protection regulations, LAC 33:XV.763 and 1599 (Log #RP054ft).

This Rule is identical to federal regulations found in 10 CFR 35 and 71, which are applicable in Louisiana. For more information regarding the federal requirement, contact the Regulation Development Section at (225) 219-3985 or Box 4302, Baton Rouge, LA 70821-4302. No fiscal or economic impact will result from the Rule. This Rule will be promulgated in accordance with the procedures in R.S. 49:953(F)(3) and (4).

This Rule will update the state regulations to be compatible with changes in the federal regulations. This Rule clarifies the training requirements for radiation safety officers, authorized medical physicists, authorized users and authorized nuclear pharmacists. This Rule also updates an incorporation by reference to remain compatible with 10 CFR Part 71. The changes in the state regulations are category B & C requirements for the state of Louisiana to remain a Nuclear Regulatory Commission (NRC) Agreement State. The basis and rationale for this Rule are to mirror the federal regulations and maintain an adequate NRC Agreement State Program. This Rule meets an exception listed in R.S. 30:2019(D)(2) and R.S. 49:953(G)(3); therefore, no report regarding environmental/health benefits and social/economic costs is required.

Title 33
ENVIRONMENTAL QUALITY
Part XV. Radiation Protection

Chapter 7. Use of Radionuclides in the Healing Arts

§763. Training

A. - B.6. …

7. Individuals who need not comply with training requirements as described in this Section may serve as preceptors for, and supervisors of, applicants seeking authorizations on Agreement State or NRC licenses for the same uses for which these individuals are authorized.

C. - M. …

AUTHORITY NOTE: Promulgated in accordance with R.S. 30:2001 et seq. and 2104.B.1.

HISTORICAL NOTE: Promulgated by the Department of Environmental Quality, Office of Air Quality and Radiation Protection, Radiation Protection Division, LR 18:34 (January 1992), amended LR 24:2106 (November 1998), amended by the Office of Environmental Assessment, Environmental Planning Division, LR 26:2590 (November 2000), LR 30:1186 (June 2004), amended by the Office of Environmental Assessment, LR 31:1061 (May 2005), amended by the Office of the Secretary, Legal Affairs Division, LR 32:814 (May 2006), LR 34:983 (June 2008), LR 34:2121 (October 2008), LR 36:1772 (August 2010), LR 38:

Chapter 15. Transportation of Radioactive Material

§1599. Appendix—Incorporation by Reference of 10 CFR Part 71, Appendix A, Tables A-1, A-2, A-3, and A-4; Procedures for Determining A_1 and A_2 [Formerly §1517]

A. Tables A-1, A-2, A-3, and A-4 in 10 CFR Part 71, Appendix A, June 13, 2012, are hereby incorporated by reference. These tables are used to determine the values of A_1 and A_2, as described in Subsections B-F of this Section.

B. - F. …

AUTHORITY NOTE: Promulgated in accordance with R.S. 30:2104 and 2113.

HISTORICAL NOTE: Promulgated by the Department of Environmental Quality, Office of Environmental Assessment, Environmental Planning Division, LR 26:1270 (June 2000), amended LR 27:2233 (December 2001), LR 28:997 (May 2002), LR 29:701 (May 2003), LR 30:752 (April 2004), amended by the Office of Environmental Assessment, LR 31:920 (April 2005), amended by the Office of the Secretary, Legal Affairs Division, LR 32:604 (April 2006), LR 33:641 (April 2007), LR 34:867 (May 2008), LR 34:2114 (October 2008), LR 35:1110 (June 2009), LR 36:2275 (October 2010), LR 38:

Family Impact Statement

This Rule has no known impact on family formation, stability, and autonomy as described in R.S. 49:972.

Public Comments

All interested persons are invited to submit written comments on the proposed regulation. Persons commenting should reference this proposed regulation by RP054ft. Such comments must be received no later than September 26, 2012, at 4:30 p.m., and should be sent to Deidra Johnson, Attorney Supervisor, Office of the Secretary, Legal Division, Box 4302, Baton Rouge, LA 70821-4302 or to fax (225) 219-4068 or by e-mail to deidra.johnson@la.gov. The comment period for this Rule ends on the same date as the public hearing. Copies of this proposed regulation can be purchased by contacting the DEQ Public Records Center at (225) 219-3168. Check or money order is required in advance for each copy of RP054ft. This regulation is available on the Internet at www.deq.louisiana.gov/portal/tabid/1669/default.aspx.

Public Hearing

A public hearing will be held on September 26, 2012, at 1:30 p.m. in the Galvez Building, Oliver Pollock Conference Room, 602 N. Fifth Street, Baton Rouge, LA 70802. Interested persons are invited to attend and submit oral comments on the proposed amendments. Should individuals with a disability need an accommodation in order to participate, contact Deidra Johnson at the address given below or at (225) 219-3985. Two hours of free parking are allowed in the Galvez Garage with a validated parking ticket.

This proposed regulation is available for inspection at the following DEQ office locations from 8 a.m. until 4:30 p.m.: 602 N. Fifth Street, Baton Rouge, LA 70802; 1823 Highway 546, West Monroe, LA 71292; State Office Building, 1525 Fairfield Avenue, Shreveport, LA 71101; 1301 Gadwall Street, Lake Charles, LA 70615; 111 New Center Drive, Lafayette, LA 70508; 110 Barataria Street, Lockport, LA

70374; 201 Evans Road, Bldg. 4, Suite 420, New Orleans, LA 70123.

Herman Robinson, CPM
Executive Counsel

1208#065

NOTICE OF INTENT

Office of the Governor
Board of Examiners for New Orleans and Baton Rouge

Steamship Pilots for the Mississippi River
(LAC 46:LXX.Chapters 61, 62, 63, and 64)

In accordance with the Administrative Procedure Act, R.S. 49:950 et seq., the Board of Examiners for New Orleans and Baton Rouge Steamship Pilots for the Mississippi River hereby gives notice of intent to promulgate rules and to repeal and reenact its rules. This proposed Rule restates existing rules and will be reenacted for the purpose of codification. New rules are in the public's interest and will promote public safety. The new rules provide more stringent educational and licensing requirements for applicants seeking a state pilot commission. The rules revise the standard of conduct for state commissioned NOBRA pilots and the process for filing a complaint against state commissioned NOBRA pilots. This Rule establishes a maximum age for selection into the Board of Examiners' Pilot Development Program. The rules revise pilot recency requirements and continuing education requirements for NOBRA pilots.

Title 46
PROFESSIONAL AND OCCUPATIONAL STANDARDS
Part LXX. River Pilots
Subpart 3. Board of Examiners for the New Orleans and Baton Rouge Steamship Pilots
Chapter 61. General Provisions
§6102. Definitions

Applicant—any person who has submitted an application to be considered for selection into the Pilot Development Program for New Orleans and Baton Rouge Steamship Pilots.

Apprentice—any person duly selected by the members of NOBRA, but not yet commissioned, who is serving in the Pilot Development Program.

* * *

AUTHORITY NOTE: Promulgated in accordance with R.S. 34:1041 et seq.

HISTORICAL NOTE: Promulgated by the Office of the Governor, Board of Examiners for New Orleans and Baton Rouge Steamship Pilots, LR 30:2471 (November 2004), amended by the Office of the Governor, Board of Examiners for New Orleans and Baton Rouge Steamship Pilots for the Mississippi River, LR 36:493 (March 2010), LR 38:

§6105. Rules, Records, Meetings, Application

A. All board rules must be adopted by a majority of the examiners. The board shall maintain records in accordance with R.S. 44:1 et seq., and all other state laws. The board shall file an annual report of investigations, findings, actions and accident data in accordance with state laws. The board shall conduct its meetings in accordance with R.S. 42:4.1 et seq., and any other state laws.

B. - C. …

D. These rules shall apply to all applicants, apprentice pilots and New Orleans and Baton Rouge steamship pilots.

AUTHORITY NOTE: Promulgated in accordance with R.S. 34:1041 et seq.

HISTORICAL NOTE: Promulgated by the Office of the Governor, Board of Examiners for New Orleans and Baton Rouge Steamship Pilots, LR 30:2471 (November 2004), amended by the Office of the Governor, Board of Examiners for New Orleans and Baton Rouge Steamship Pilots for the Mississippi River, LR 36:494 (March 2010), LR 38:

Chapter 62. Qualifications and Examination of Pilots
§6204. Application

A. …

* * *

B. All applications shall be in writing, signed by the applicant and presented to a member of the board or their authorized representative by the applicant. All persons wishing to submit an application shall make an appointment with an examiner or their authorized representative by contacting the board's office. All applications shall be notarized and be accompanied by satisfactory proof of compliance with all of the board's objective requirements. Upon submission a board member or their authorized representative will provide a stamped copy to the applicant indicating the date and time of submission. The board or their authorized representative shall reject all deficient applications and provide an applicant written notice of the specific deficiency.

C. …

AUTHORITY NOTE: Promulgated in accordance with R.S. 34:1041 et seq.

HISTORICAL NOTE: Promulgated by the Office of the Governor, Board of Examiners for New Orleans and Baton Rouge Steamship Pilots, LR 30:2473 (November 2004), amended by the Office of the Governor, Board of Examiners for New Orleans and Baton Rouge Steamship Pilots for the Mississippi River, LR 36:495 (March 2010), LR 38:

§6205. General Requirements

A. - B. ..

C. An applicant shall submit proof of a current satisfactory United States Coast Guard approved physical (Merchant Mariner Physical Examination Report). Upon notification of an impending NOBRA selection of apprentices, the applicant shall submit to a physical examination administered by an Examiner appointed physician specializing in occupational medicine no more than 40 days prior to the selection.

D. An applicant must not have reached his forty-fifth birthday prior to the date of selection into the Pilot Development Program.

E. An applicant shall submit evidence of satisfactory completion of training programs approved by the board for the following courses of instruction:

1. any source may file a sworn complaint within one year of the alleged acts complained of;

2. the board shall receive any sworn complaint from any source against any pilot, deputy pilot or apprentice while in the performance of his duties;

3. any sworn complaint submitted by any source to the board shall be typewritten and submitted on plain paper and shall include the date and time of the incident, a description of what happened, the type of incident, casualties, location, conditions, name of vessel piloted, if

known, any other vessels, structures, or objects involved, the name of the pilot, if known, and any allegations against the pilot, and shall be given in an authentic act in which the complainant swears to the truthfulness of the allegations, subject to the penalties of perjury;

4. if a sworn complaint is not submitted in the prescribed manner, the board shall return it, with an explanation of error, and without prejudice to the sender to properly refile.

F. An applicant shall provide proof they have passed a board approved drug screen test consistent with the board's drug screen policy (See Chapter 65 of the board's rules) within thirty days prior to submission of an application. Additionally, upon notification of a pending NOBRA selection of apprentices, the applicant shall submit proof that they have passed a board approved drug screen test not more than 40 days prior to the selection.

AUTHORITY NOTE: Promulgated in accordance with R.S. 34:1041 et seq.

HISTORICAL NOTE: Promulgated by the Office of the Governor, Board of Examiners for New Orleans and Baton Rouge Steamship Pilots, LR 30:2473 (November 2004), amended by the Office of the Governor, Board of Examiners for New Orleans and Baton Rouge Steamship Pilots for the Mississippi River, LR 36:495 (March 2010), LR 38:

§6206. Licenses/Education/Experience

A. In addition to the above, an applicant must submit satisfactory proof of the following licensing, education and experience criteria.

1. An applicant must hold at least a current First Class Pilots License, Any Gross Tons, upon the Lower Mississippi River from Chalmette, Louisiana to Baton Rouge Railroad and Highway Bridge at Baton Rouge, Louisiana, including physical, and, at least, either a Master of Steam or Motor Vessels; or Master of Towing Vessels; or Third Mate; or an equivalent or greater United States Coast Guard license.

a. …

2. An applicant must hold a Bachelor degree from an accredited maritime academy.

NOTE: Should the association choose to select entrants into the Pilot Development Program prior to January 1, 2018, applicants who hold at least a Bachelor degree from an accredited institution of higher learning may be presented to the association for consideration.

AUTHORITY NOTE: Promulgated in accordance with R.S. 34:1041 et seq.

HISTORICAL NOTE: Promulgated by the Office of the Governor, Board of Examiners for New Orleans and Baton Rouge Steamship Pilots, LR 30:2473 (November 2004), amended by the Office of the Governor, Board of Examiners for New Orleans and Baton Rouge Steamship Pilots for the Mississippi River, LR 36:495 (March 2010), LR 38:

§6207. Notice of Apprentice Selection

A. At least 50 days prior to an apprentice selection, NOBRA must inform the board, in writing, that a selection will be held and the date of the selection.

B. At least 40 days prior to the apprentice selection, the board will advertise the date of the apprentice selection, as well as the deadline for submission of application materials, in at least two periodicals, one of which shall have a circulation of the greater New Orleans area and one of which shall have a circulation of the greater Baton Rouge area. In addition, all relevant dates will be posted on the board's website.

C. At least 30 days prior to the apprentice selection, the board will give notice, via U.S. Mail, to all applicants of the date of the selection and the deadline for submitting documentation in support of their application.

D. The deadline for submitting an application and supporting documentation, shall be 3 p.m., 20 days prior to the apprentice selection.

E. At least 18 days prior to the apprentice selection, the board will forward to NOBRA a list of all qualified candidates and supporting documentation of all candidates who meet the criteria for selection, as enumerated in the board's rules.

F. At the conclusion of a NOBRA apprentice selection, NOBRA shall provide the board, in writing, a list of those candidates selected for admission into the Pilot Development Program as an Apprentice Pilot. The board shall unilaterally determine the maximum number apprentices admitted into the Pilot Development Program at any given time. After receipt of notification from NOBRA, the board will notify the selected applicant via U.S. Mail of the time, date and location of the commencement of the Pilot Development Program.

AUTHORITY NOTE: Promulgated in accordance with R.S. 34:1041 et seq.

HISTORICAL NOTE: Promulgated by the Office of the Governor, Board of Examiners for New Orleans and Baton Rouge Steamship Pilots, LR 30:2474 (November 2004), amended by the Office of the Governor, Board of Examiners for New Orleans and Baton Rouge Steamship Pilots for the Mississippi River, LR 36:496 (March 2010), LR 38:

§6208. Expiration of Applications

A. Following an apprentice selection, all unselected applications on file with the board will be deemed expired and destroyed.

AUTHORITY NOTE: Promulgated in accordance with R.S. 34:1041 et seq.

HISTORICAL NOTE: Promulgated by the Office of the Governor, Board of Examiners for New Orleans and Baton Rouge Steamship Pilots, LR 30:2474 (November 2004), amended by the Office of the Governor, Board of Examiners for New Orleans and Baton Rouge Steamship Pilots for the Mississippi River, LR 36:496 (March 2010), LR 38:

§6209. Pilot Development Program

A. - E.2.d. …

e. lack of fitness for the position and responsibilities of a pilot; and

f. any violations of standards of conduct as enumerated in §6307 of the board's rules.

AUTHORITY NOTE: Promulgated in accordance with R.S. 34:1041 et seq.

HISTORICAL NOTE: Promulgated by the Office of the Governor, Board of Examiners for New Orleans and Baton Rouge Steamship Pilots, LR 30:2474 (November 2004), amended by the Office of the Governor, Board of Examiners for New Orleans and Baton Rouge Steamship Pilots for the Mississippi River, LR 36:496 (March 2010), LR 38:

Chapter 63. Standards of Conduct

§6304. Definitions

A. As used in this Chapter, the following terms, unless the context otherwise requires or unless redefined by a particular part hereof, shall have the following meanings.

* * *

Deputy Pilot—a commissioned pilot in the Pilot Development Program.

Fit for Duty—a pilot who meets the board's requirements regarding licensure, physical and medical competency and is current with their continuing education requirements.

* * *

AUTHORITY NOTE: Promulgated in accordance with R.S. 34:1041 et seq.

HISTORICAL NOTE: Promulgated by the Office of the Governor, Board of Examiners for New Orleans and Baton Rouge Steamship Pilots, LR 30:2475 (November 2004), amended by the Office of the Governor, Board of Examiners for New Orleans and Baton Rouge Steamship Pilots for the Mississippi River, LR 36:498 (March 2010), LR 38:

§6307. Standards of Conduct

A. The board may in its discretion recommend to the Office of the Governor, reprimand, fine, suspension and/or revocation of a pilot, Deputy Pilot, or apprentice for the following non-exclusive list of particulars:

1. - 3. …

4. failure to maintain a current satisfactory United States Coast Guard approved physical (Merchant Mariner Physical Examination Report);

5. conviction of any felony from any jurisdiction whatsoever;

6. any violation of the board's drug and alcohol policy;

7. neglect of duty; and

8. any violation of these rules.

AUTHORITY NOTE: Promulgated in accordance with R.S. 34:1041 et seq.

HISTORICAL NOTE: Promulgated by the Office of the Governor, Board of Examiners for New Orleans and Baton Rouge Steamship Pilots, LR 30:2476 (November 2004), amended by the Office of the Governor, Board of Examiners for New Orleans and Baton Rouge Steamship Pilots for the Mississippi River, LR 36:498 (March 2010), LR 38:

§6310. Recency Requirement

Repealed.

AUTHORITY NOTE: Promulgated in accordance with R.S. 34:1041 et seq.

HISTORICAL NOTE: Promulgated by the Office of the Governor, Board of Examiners for New Orleans and Baton Rouge Steamship Pilots, LR 30:2476 (November 2004), amended by the Office of the Governor, Board of Examiners for New Orleans and Baton Rouge Steamship Pilots for the Mississippi River, LR 36:499 (March 2010), LR 38:

§6310. Continuing Professional Education

A.1. - A.1.f. …

2. Every pilot must annually and successfully complete 8 hours of professional development courses approved by the board. The board may, from time to time, adjust these requirements in order to maintain the highest level of professional competency and pilot safety.

B. - E. …

AUTHORITY NOTE: Promulgated in accordance with R.S. 34:1041 et seq.

HISTORICAL NOTE: Promulgated by the Office of the Governor, Board of Examiners for New Orleans and Baton Rouge Steamship Pilots, LR 30:2477 (November 2004), amended by the Office of the Governor, Board of Examiners for New Orleans and Baton Rouge Steamship Pilots for the Mississippi River, LR 36:499 (March 2010), LR 38:

§6311. Mandatory Rest Period

A. For the purpose of this rule, a turn is the time period from dispatch to the termination of the allotted travel time.

B. All pilots shall have a minimum of eight hours rest period between turns.

C. For the purpose of this rule, the rest period begins at the termination of the allotted travel time at the completion of one turn and ends at the time of dispatching for the next turn.

D. Notwithstanding Subsection B, the captain of the station and shift pilots shall be exempt from the minimum 8 hours rest period in between turns. However, in no case shall the captain of the station and shift pilots exceed 12 bridge hours in any 24 hour period.

E. Notwithstanding Subsection B, any pilot completing a turn lasting less than 4 bridge hours or receiving a discharge, shall not be required to comply with the mandatory 8 hours rest period. However, in no case shall any pilot acquire more than 12 hours in a 24 hour period. Pilots requesting eight hours rest period shall not be called or dispatched in less than 8 hours from the completion of their finishing time.

F. Notwithstanding Subsection B, during a state of declared emergency all pilots shall be exempt from the minimum 8 hours rest period in between turns. However, in no case shall any pilot exceed 12 bridge hours in any 24 hour period.

AUTHORITY NOTE: Promulgated in accordance with R.S. 34:1041 et seq.

HISTORICAL NOTE: Promulgated by the Office of the Governor, Board of Examiners for New Orleans and Baton Rouge Steamship Pilots, LR 31:56 (January 2005), amended by the Office of the Governor, Board of Examiners for New Orleans and Baton Rouge Steamship Pilots for the Mississippi River, LR 36:500 (March 2010), LR 38:

Chapter 64. Investigations and Enforcement

§6404. Duty to Report

A. - C. ..

D. Upon receipt of any incident by a pilot the board shall conduct an investigation and take appropriate action commensurate with the nature of the incident.

AUTHORITY NOTE: Promulgated in accordance with R.S. 34:1041 et seq.

HISTORICAL NOTE: Promulgated by the Office of the Governor, Board of Examiners for New Orleans and Baton Rouge Steamship Pilots, LR 30:2477 (November 2004), amended by the Office of the Governor, Board of Examiners for New Orleans and Baton Rouge Steamship Pilots for the Mississippi River, LR 36:500 (March 2010), LR 38:

§6406. Investigations and Enforcement

A. All incidents and complaints reported to the board shall be referred for investigation.

1. any source may file a sworn complaint within one year of the alleged acts complained of;

2. the board shall receive any sworn complaint from any source against any pilot, deputy pilot or apprentice while in the performance of his duties;

3. any sworn complaint submitted by any source to the board shall be typewritten and submitted on plain paper and shall include the date and time of the incident, a description of what happened, the type of incident,

casualties, location, conditions, name of vessel piloted, if known, any other vessels, structures, or objects involved, the name of the pilot, if known, and any allegations against the pilot, and shall be given in an authentic act in which the complainant swears to the truthfulness of the allegations, subject to the penalties of perjury;

4. if a sworn complaint is not submitted in the prescribed manner, the board shall return it, with an explanation of error, and without prejudice to the sender to properly refile.

B. - U. …

AUTHORITY NOTE: Promulgated in accordance with R.S. 34:1041 et seq.

HISTORICAL NOTE: Promulgated by the Office of the Governor, Board of Examiners for New Orleans and Baton Rouge Steamship Pilots, LR 30:2478 (November 2004), amended by the Office of the Governor, Board of Examiners for New Orleans and Baton Rouge Steamship Pilots for the Mississippi River, LR 36:501 (March 2010), LR 38:

Family Impact Statement

The proposed Rule of the Board of Examiners for New Orleans and Baton Rouge Steamship Pilots for the Mississippi River should not have any known or foreseeable impact on any family as defined by R.S. 49:972(D) or on family formation, stability, and autonomy. The implementation of these amended rules will have no known or foreseeable effect on:

1. the stability of the family;
2. the authority and rights of parents regarding the education and supervision of their children;
3. the functioning of the family;
4. family earnings and family budgets;
5. the behavior and personal responsibility of children; and
6. the ability of the family or a local government to perform this function.

Small Business Statement

The impact of the proposed Rule on small businesses as defined in the Regulatory Flexibility Act has been considered. It is estimated that the proposed action is not expected to have a significant adverse impact on small businesses. The agency, consistent with health, safety, environmental and economic welfare factors has considered and, where possible, utilized regulatory methods in the drafting of the proposed ruled that will accomplish the objectives of applicable statutes while minimizing the adverse impact of the proposed rules on small businesses.

Public Comments

All interested persons are invited to submit written comments on the proposed regulations. Such comments must be in writing and received no later than September 10, 2012 at 4:30 p.m. and should be sent to Captain Robert D. Heitmeier, President of the Board of Examiners for New Orleans and Baton Rouge Steamship Pilots for the Mississippi River, 2805 Harvard Avenue, Suite 101, Metairie, LA 70006. The proposed regulations are available for inspection at the Office of the State Register website: http://www.doa.state.la.us/osr/osr.htm.

Captain Robert D. Heitmeier
President

FISCAL AND ECONOMIC IMPACT STATEMENT
FOR ADMINISTRATIVE RULES
RULE TITLE: Steamship Pilots
for the Mississippi River

I. ESTIMATED IMPLEMENTATION COSTS (SAVINGS) TO STATE OR LOCAL GOVERNMENT UNITS (Summary)

The proposed rule changes outline the general operation of the Board of Examiners, standards of proper conduct of the New Orleans – Baton Rouge Steamship Pilots Association (NOBRA) pilots and procedures for investigation and enforcement of the Board's rules. These rules establish a maximum age for selection into the Board's Pilot Development Program. These rules revise pilot recency requirements and continuing education requirements for NOBRA pilots. The proposed rule changes will have no impact on state or local governmental unit expenditures. All expenses, if any, are paid by NOBRA as per law.

II. ESTIMATED EFFECT ON REVENUE COLLECTIONS OF STATE OR LOCAL GOVERNMENTAL UNITS (Summary)

The proposed rule change is anticipated to have no impact on revenue collections of state or local governmental units.

III. ESTIMATED COSTS AND/OR ECONOMIC BENEFITS TO DIRECTLY AFFECTED PERSONS OR NONGOVERNMENTAL GROUPS (Summary)

Current pilots will not be subject to additional costs. Additionally, applicants will not be subject to additional costs.

Further, these rules revise the standard of conduct of state commissioned NOBRA pilots and the process for filing a complaint against state commissioned NOBRA pilots. Those who violate these rules may have their state commission affected due to disciplinary action taken by the Board of Examiners or the Governor. If a NOBRA pilot violates these rules, he/she may be subject to disciplinary action by the Board of Examiners or Governor. If that pilot's state commission is suspended or revoked, this may have an impact on that pilot's income. Finally, these rules revise pilot recency requirements and continuing education requirements for NOBRA pilots.

IV. ESTIMATED EFFECT ON COMPETITION AND EMPLOYMENT (Summary)

Under the proposed rule changes, applicants for a state pilot commission will be subject to more stringent educational and licensing requirements. This may impact the ability of certain applicants to receive a state pilot commission. These rules establish a maximum age for selection into the Board of Examiners' Pilot Development Program.

Captain Robert D. Heitmeier	Evan Brasseaux
President	Staff Director
1208#076	Legislative Fiscal Office

NOTICE OF INTENT

Office of the Governor
Division of Administration
Racing Commission

Owner's Entry of More Than One Horse (LAC 35:V.6335)

The Louisiana State Racing Commission hereby gives notice that it intends to amend the following Rule. The proposed Rule will allow uncoupling of same owned betting interests in stakes races with purse minimum requirements.

Title 35
HORSE RACING
Part V. Racing Procedures
Chapter 63. Entries
§6335. Owner's Entry of More Than One Horse

A. …

B. In stakes races with a purse value of $50,000 or greater, horses having common ties through ownership or interest may be uncoupled and allowed to run as separate betting units at the discretion of the stewards.

AUTHORITY NOTE: Promulgated in accordance with R.S. 4:148.

HISTORICAL NOTE: Adopted by the Racing Commission in 1971, promulgated by the Department of Commerce, Racing Commission LR 2:437 (December 1976), amended LR 3:33 (January 1977), LR 4:280 (August 1978), amended by the Office of the Governor, Division of Administration, Racing Commission, LR 38:

Family Impact Statement

This proposed Rule has no known impact on family formation, stability, and/or autonomy as described in R.S. 49:972.

Public Comments

The domicile office of the Louisiana State Racing Commission is open from 8 a.m. to 4:30 p.m., and interested parties may contact Charles A. Gardiner III, Executive Director, or Larry Munster, Assistant Executive Director, at (504) 483-4000 (holidays and weekends excluded), or by fax (504) 483-4898, for more information. All interested persons may submit written comments relative to this proposed Rule for a period up to 20 days exclusive of weekends and state holidays from the date of this publication to 320 North Carrollton Avenue, Suite 2-B, New Orleans, Louisiana 70119-5100.

Charles A. Gardiner III
Executive Director

FISCAL AND ECONOMIC IMPACT STATEMENT FOR ADMINISTRATIVE RULES
RULE TITLE: Owner's Entry of More Than One Horse

I. ESTIMATED IMPLEMENTATION COSTS (SAVINGS) TO STATE OR LOCAL GOVERNMENT UNITS (Summary)

There is no anticipated direct material effect on state or local governmental units expenditures as a result of the proposed administrative rule. The proposed rule allows for more opportunities for horses having common ties through ownership to race as separate betting units, rather than coupled as a single betting unit in stakes races with a purse value of $50,000 or greater.

II. ESTIMATED EFFECT ON REVENUE COLLECTIONS OF STATE OR LOCAL GOVERNMENTAL UNITS (Summary)

The proposed rule change will result in an indeterminable increase in state and local governmental collections. The estimated revenue collection is based on statutorily prescribed percentages that are taxed by the local government and State of Louisiana in regard to amounts wagered. The amended rule may increase revenue by increasing the amount wagered by the betting public as uncoupling entries will increase the field size in a race as the previously coupled horses will be separate betting interests rather than a single combined betting interest and potentially result in a more lucrative wager.

III. ESTIMATED COSTS AND/OR ECONOMIC BENEFITS TO DIRECTLY AFFECTED PERSONS OR NONGOVERNMENTAL GROUPS (Summary)

The proposed administrative rule change may result in an indeterminable economic benefit to licensed racetracks in Louisiana by offering more wagering opportunities on horses in a race having common ties through ownership, which may result in increased wagering.

IV. ESTIMATED EFFECT ON COMPETITION AND EMPLOYMENT (Summary)

There is no effect on competition and employment as a result of the proposed administrative rule change.

Charles A. Gardiner III	Evan Brasseaux
Executive Director	Staff Director
1208#009	Legislative Fiscal Office

NOTICE OF INTENT

Office of the Governor
Office of Financial Institutions

Dishonest or Unethical Practices
(LAC 10:XIII.1201 and 1203)

In accordance with the Louisiana Securities Law (hereinafter "the LSL"), R.S. 51:701, et seq., and particularly, R.S. 51:704 A.(10), and the Louisiana Administrative Procedure Act, R.S. 49:950, et seq., the commissioner of Financial Institutions, in his capacity as the Commissioner of Securities (hereinafter "the Commissioner") hereby gives notice of his intent to adopt LAC 10:XIII.1201-1203, a Rule illustrating examples of dishonest or unethical practices providing grounds for suspension or revocation of registration. Such examples are illustrative only and shall not be deemed exclusive.

Any dealer, salesman, investment adviser, or investment adviser representative who engages in one or more of the following practices shall be deemed to have engaged in dishonest or unethical practices as provided by R.S. 51:704 A.(10), of the LSL, and such conduct may constitute grounds for suspension or revocation of registration or such other action authorized by statute. This Rule is not intended to be all inclusive, and thus, acts or practices not enumerated herein may also be deemed to be dishonest or unethical. It is the sense of the commissioner that this proposed Rule is necessary to carry out the provisions of the LSL where such action is consistent with the public interest and with the purpose fairly intended by the policy and provisions of the LSL.

Title 10
FINANCIAL INSTITUTIONS, CONSUMER CREDIT, INVESTMENT SECURITIES AND UCC
Part XIII. Investment Securities
Subpart 1. Securities
Chapter 12. Dishonest or Unethical Practices
§1201. Dealers and Salesmen

A. *Dealers and Salesmen*—includes the following actions:

1. engaging in a pattern of unreasonable and unjustifiable delays in the delivery of securities purchased by any customer or in the payment upon request of free credit balances reflecting completed transactions of any customer;

2. inducing trading in a customer's account which is excessive in size or frequency in view of the financial resources and character of the account;

3. recommending to a customer the purchase, sale or exchange of a security without reasonable grounds to believe that the transaction or recommendation is suitable for the customer based upon reasonable inquiry concerning the customer's investment objectives, financial situation and needs and other relevant information known by the dealer;

4. executing a transaction on behalf of a customer without authorization to do so;

5. exercising discretionary power in effecting a transaction for a customer's account without first obtaining written discretionary authority from the customer, unless the discretionary power relates solely to the time or price, or both, for the execution of orders;

6. executing a transaction in a margin account without securing from the customer a properly executed written margin agreement promptly after the initial transaction in the account;

7. failing to segregate customers' free securities or securities held in safekeeping;

8. hypothecating a customer's securities without having a lien thereon unless the dealer secures from the customer a properly executed written consent promptly after the initial transaction, except as permitted by rules of the Securities and Exchange Commission;

9. entering into a transaction with or for a customer at a price not reasonably related to the current market price of the security or receiving an unreasonable commission or profit;

10. failing to furnish to a customer purchasing securities in an offering, no later than the date of confirmation of the transaction, either a final prospectus or a preliminary prospectus and an additional document, which together include information set forth in the final prospectus;

11. charging unreasonable and inequitable fees for services performed, including miscellaneous services such as collection of monies due for principal, dividends or interest, exchange or transfer of securities, appraisals, safekeeping or custody of securities and other services related to its securities business;

12. offering to buy from or sell to a person a security at a stated price unless the dealer or salesman is prepared to purchase or sell the security at such price and under the conditions that are stated at the time of the offer to buy or sell;

13. representing that a security is being offered to a customer "at the market" or a price relevant to the market price unless the dealer or salesman knows or has reasonable grounds to believe that a market for the security exists other than that made, created or controlled by the dealer, or by a person for whom the dealer is acting, or by a person with whom the dealer is associated in the distribution, or by a person controlled by, controlling or under common control with the dealer;

14. effecting a transaction in, or inducing the purchase or sale of, a security by means of a manipulative, deceptive or fraudulent device, practice, plan, program, design or contrivance, which may include:

a. effecting a transaction in a security which involves no change in the beneficial ownership thereof;

b. entering an order for the purchase or sale of a security with the knowledge that an order of substantially the same size, at substantially the same time, and substantially the same price, for the sale of the security, has been or will be entered by or for the same or different parties for the purpose of creating a false or misleading appearance of active trading in the security or a false or misleading appearance with respect to the market for the security. Nothing in this subsection prohibits a dealer from entering bona fide agency cross transactions for its customers;

c. effecting, along or with one or more other persons, a series of transactions in a security creating actual or apparent active trading in the security or raising or depressing the price of the security, for the purpose of inducing the purchase or sale of the security by others;

15. guaranteeing a customer against loss in a securities account of the customer or in a securities transaction effected with or for the customer;

16. publishing or circulating, or causing to be published or circulated, a notice, circular, advertisement, newspaper article, investment service or communication of any kind which purports to report a transaction as a purchase or sale of a security unless the dealer or salesman believes that the transaction was a bona fide purchase or sale of the security; or which purports to quote the bid price or asked price for a security, unless the dealer believes that the quotation represents a bona fide bid for, or offer of, the security;

17. using an advertising or sales presentation in such a fashion as to be deceptive or misleading;

18. failing to disclose that the dealer is controlled by, controlling, affiliated with, or under common control with the issuer of a security before entering into a contract with or for a customer for the purchase or sale of the security. If the disclosure is not made in writing, it shall be supplemented by the giving or sending of written disclosure at or before the completion of the transaction;

19. failing to make a bona fide public offering of all of the securities allotted to a dealer for distribution, whether acquired as an underwriter, a selling group member or from a member participating in the distribution as an underwriter or selling group member;

20. failure or refusal to furnish a customer, upon reasonable request, information to which he is entitled, or to respond to a formal written request or complaint;

21. failing to comply with an applicable provision of the Rules of Fair Practice of the Financial Industry Regulatory Authority or an applicable fair practice or ethical standard promulgated by the Securities and Exchange Commission or by a self-regulatory organization approved by the Securities and Exchange Commission;

22. engaging in the practice of lending or borrowing money or securities from a customer, or acting as a custodian for money, securities or an executed stock power of a customer without proper authority to do so;

23. effecting securities transactions not recorded on the regular books or records of the dealer, unless the transactions are authorized in writing by the dealer prior to execution of the transaction;

24. establishing or maintaining an account containing fictitious information in order to execute transactions which would otherwise be prohibited;

25. sharing directly or indirectly in profits or losses in the account of a customer without the written authorization of the customer;

26. dividing or otherwise splitting a salesman's commissions, profits or other compensation from the purchase or sale of securities with a person not also registered as a salesman for the same dealer, or for a dealer under direct or indirect common control.

AUTHORITY NOTE: Promulgated in accordance with R.S. 51:704 A(10)

HISTORICAL NOTE: Promulgated by the Office of the Governor, Office of Financial Institutions, LR 38:

§1203. Investment Advisers and Investment Adviser Representatives

A.1. Investment Advisers and Investment Adviser Representatives—includes the following actions:

a. recommending to a client to whom investment supervisory, management or consulting services are provided the purchase, sale or exchange of a security without reasonable grounds to believe that the recommendation is suitable for the client on the basis of information furnished by the client after reasonable inquiry concerning the client's investment objectives, financial situation and needs, and any other information known by the investment adviser or investment adviser representative;

b. exercising any discretionary power in placing an order for the purchase or sale of securities for a client without obtaining written discretionary authority from the client within 10 business days after the date of the first transaction placed under oral discretionary authority, unless the discretionary power relates solely to the price at which, or the time when, an order involving a definite amount of a specified security shall be executed, or both;

c. inducing trading in a client's account that is excessive in size or frequency in view of the financial resources, investment objectives and character of the account;

d. placing an order to purchase or sell a security for the account of a client without authority to do so;

e. placing an order to purchase or sell a security for the account of a client upon instruction of a third party without first having obtained a written third-party trading authorization from the client;

f. borrowing money or securities from a client unless the client is a dealer, an affiliate of the investment adviser, or a financial institution engaged in the business of loaning funds;

g. loaning money to a client unless the investment adviser is a financial institution engaged in the business of loaning funds or the client is an affiliate of the investment adviser;

h. misrepresenting to an advisory client, or prospective advisory client, the qualifications of the investment adviser, investment adviser representative, or an employee of the investment adviser; misrepresenting the nature of the advisory services being offered; or misrepresenting fees to be charged for the service; or to omit to state a material fact necessary to make the statements made regarding qualifications, services or fees, in light of the circumstances under which they are made, not misleading;

i. providing a report or recommendation to an advisory client prepared by someone other than the investment adviser or investment adviser representative without disclosing that fact. This prohibition does not apply to a situation where the investment adviser or investment adviser representative uses published research reports or statistical analyses to render advice or where an investment adviser or investment adviser representative orders the report in the normal course of providing advice;

j. charging a client an unreasonable advisory fee in light of the type of service to be provided; the experience and expertise of the investment adviser; or the sophistication or bargaining power of the client; or without notice to the client, dividing or otherwise splitting the advisory fee or other compensation derived from the advisory services;

k. failing to disclose to clients in writing before advice is rendered a material conflict of interest relating to the investment adviser, the investment adviser representative or an employee of the investment adviser which could reasonably be expected to impair the rendering of unbiased and objective advice including:

i. compensation arrangements connected with advisory services to clients which are in addition to compensation from the clients for the services;

ii. charging a client an advisory fee for rendering advice when a commission for executing securities transactions pursuant to the advice will be received by the investment adviser, the investment adviser representative or an employee of the investment adviser;

l. guaranteeing a client that a specific result will be achieved, gain or no loss, with advice which will be rendered;

m. publishing, circulating or distributing an advertisement which does not comply with Rule 206(4)-1 under the Investment Advisers Act of 1940 (15 U.S.C.A. §§80b-1 - 80b-21);

n. disclosing the identity, affairs or investments of a client unless required by law to do so, or unless consented to by the client;

o. entering into, extending or renewing an investment advisory contract unless the contract is in writing and discloses, in substance, the services to be provided, the term of the contract, the advisory fee, the formula for computing the fee, the amount of a prepaid fee to be returned in the event of contract termination or nonperformance, whether the contract grants discretionary power to the adviser and that no assignment of the contract shall be made by the investment adviser without the consent of the other party to the contract;

p. failing to establish, maintain and enforce written policies and procedures reasonably designed to prevent the misuse of material nonpublic information contrary to the provisions of section 204a of the Investment Advisers Act of 1940 (15 U.S.C.A. §80b-4a) and the rules and regulations of the United States Securities and Exchange Commission promulgated thereunder;

q. entering into, extending, or renewing any advisory contract contrary to the provisions of section 205 of the Investment Advisers Act of 1940 (15 U.S.C.A. §80b-5) and the rules and regulations of the United States Securities and Exchange Commission promulgated thereunder. This applies to all investment advisers and investment adviser representatives registered under section 703 of the LSL notwithstanding whether the investment adviser is exempt from registration with the United States Securities and Exchange Commission under section 203(b) of the Investment Advisers Act of 1940 (15 U.S.C.A. §80b-3);

r. to indicate, in an advisory contract, any condition, stipulation or provision binding any person to waive compliance with any provision of the LSL or any other language which may lead a client to believe that legal rights have been restricted or waived;

s. engaging in any act, practice or course of business which is fraudulent, deceptive or manipulative or contrary to the provisions of section 206(4) of the Investment Advisers Act of 1940 (15 U.S.C.A. §80b-6(4) and the rules and regulations of the United States Securities and Exchange Commission promulgated thereunder. This applies to all investment advisers and investment adviser representatives registered under section 703 of the LSL notwithstanding whether the investment adviser is exempt from registration with the United States Securities and Exchange Commission under section 203(b) of the Investment Advisers Act of 1940;

t. engaging in conduct or committing any act, directly, indirectly or through or by another person, which would be unlawful for the person to do directly under the provisions of the LSL or any rule, regulation or order issued thereunder, or engaging in other conduct such as nondisclosure, incomplete disclosure or deceptive practices shall be deemed an unethical practice.

2. This Section does not apply to Federally-covered advisers unless the conduct otherwise is actionable under section 712 of the LSL.

AUTHORITY NOTE: Promulgated in accordance with R.S. 51: 704 A. (10)

HISTORICAL NOTE: Promulgated by the Office of the Governor, Office of Financial Institutions, LR 38:

Family Impact Statement

The proposed Rule has no impact on family formation, stability or autonomy, as described in R.S.49:972

Small Business Impact Statement

The impact of the proposed Rule on small businesses as defined in R.S. 49:965.4(4) in the Regulatory Flexibility Act has been considered. It is estimated that the proposed action is not expected to have a significant impact on small businesses.

Public Comments

All interested persons are invited to submit written comments on this proposed Rule, not later than 4:30 p.m., September 10, 2012, to Rhonda Reeves, Deputy Commissioner of Securities, P.O. Box 94095, Baton Rouge, LA, 70804-9095, or by hand delivery to the Office of Financial Institutions, 8660 United Plaza Boulevard, Baton Rouge, LA 70809-7024.

John Ducrest
Commissioner of Securities

FISCAL AND ECONOMIC IMPACT STATEMENT FOR ADMINISTRATIVE RULES
RULE TITLE: Dishonest or Unethical Practices

I. ESTIMATED IMPLEMENTATION COSTS (SAVINGS) TO STATE OR LOCAL GOVERNMENT UNITS (Summary)

There is no anticipated impact on state or local governmental units as a result of the proposed rule. Pursuant to Act 36 (SB 638) of the 2012 Regular Legislative Session, the proposed rule will allow the Commissioner of Securities to suspend or revoke the registration of a securities dealer, salesman, investment adviser, or investment adviser representative if it is determined that the registrant has conducted securities business in a dishonest or unethical manner.

II. ESTIMATED EFFECT ON REVENUE COLLECTIONS OF STATE OR LOCAL GOVERNMENTAL UNITS (Summary)

There is no anticipated impact on state or local governmental revenues as a result of the proposed rule.

III. ESTIMATED COSTS AND/OR ECONOMIC BENEFITS TO DIRECTLY AFFECTED PERSONS OR NONGOVERNMENTAL GROUPS (Summary)

The proposed rule will have a non-quantifiable impact on dishonest and unethical securities dealers, salesmen, investment advisers, and investment adviser representatives as such conduct may constitute grounds for suspension or revocation of registration.

IV. ESTIMATED EFFECT ON COMPETITION AND EMPLOYMENT (Summary)

There is no anticipated impact on competition and employment as a result of the proposed rule change.

John Ducrest	Evan Brasseaux
Commissioner	Staff Director
1208#078	Legislative Fiscal Office

NOTICE OF INTENT

Department of Health and Hospitals
Board of Examiners of Psychologists

Continuing Education (LAC 46:LXIII.Chapter 8)

In accordance with R.S. 49:950 et seq., the Administrative Procedure Act, notice is hereby given that the Department of Health and Hospitals, Board of Examiners of Psychologists is amending LAC 46:LXIII.Chapter 8, Continuing Education. Continuing Education is an ongoing process of learning activities that increase professional development. The proposed amendment to Chapter 8 replaces the current continuing education requirement of 30 hours to 40 hours to be reported biannually for purposes of licensure renewal. This change includes 10 different categories in which a psychologist can obtain continuing education. This proposed change will only better protect the public and assure that Louisiana licensed psychologists are obtaining professional development comparable to national standards.

Title 46
PROFESSIONAL AND OCCUPATIONAL STANDARDS
Part LXIII. Psychologists
Chapter 8. Continuing Education
§801. Preface

A. Pursuant to R.S. 37:2357(B) each licensed psychologist is required to complete continuing education

hours within biennial reporting periods. Continuing education is an ongoing process consisting of learning activities that increase professional development. Continuing professional development (CPD) activities:

1. are relevant to psychological practice, education and science;

2. enable psychologists to keep pace with emerging issues and technologies; and

3. allow psychologists to maintain, develop, and increase competencies in order to improve services to the public and enhance contributions to the profession.

AUTHORITY NOTE: Promulgated in accordance with R.S. 37:2357.

HISTORICAL NOTE: Promulgated by the Department of Health and Hospitals, Board of Examiners of Psychologists, LR 16:769 (September 1990), amended LR 19:46 (January 1993), LR 32:1228 (July 2006), LR 36:1007 (May 2010), LR 38:

§803. Requirements

A. For the reporting periods that begin July 2012 and July 2013, each psychologist is required to complete 30 hours or credits of continuing professional development within the biennial reporting period. The CPD credits must conform to the percentage distribution requirements listed below in Subsection C of this Section. For the reporting periods that begin July 2014 and July 2015 and henceforth, 40 credits of continuing professional development will be required in the biennial reporting period and the hours must conform to the distribution listed below in Subsection C of this Section. The percentage distribution requirements are also listed on the CPD overall log.

B. Within each reporting period, two of the required hours or credits of continuing professional development must be within the area of ethics.

C. Licensees can accumulate continuing professional development credits in 10 ways.

1. Professional

a. Peer Consultation (1 hour of peer consultation equals 1 credit)—examples include case consultation groups; journal clubs; regional research groups; mentoring; and shadowing a colleague. If learning is reciprocal, credit is split between both licensees.

i. Maximum allowed toward requirement:

(a). 50 percent of total credit hours.

ii. If requested, documentation required to earn credit:

(a). verification form providing evidence that it is a structured program of consultation with regularly scheduled meetings and showing the nature of the consultation;

(b). additionally, the person providing the consultation must attest, by signature, to the description of the program, number of hours met and that the verification form have been completed.

b. Practice Outcome Monitoring (1 completed questionnaire equals 1 credit)—assessing patient/client outcomes via a questionnaire that is shown to be of empirical value.

i. Maximum allowed toward requirement:

(a). 50 percent of total credit hours.

ii. If requested, documentation required to earn credit:

(a). verification form providing number of hours spent with patient/client and a de-identified copy of the patient/client questionnaire.

c. Professional Activities (1 year equals 10 credits)—serving on a national, regional, or state psychological association board or committee or board member of regulatory body related to the field of psychology.

i. Maximum allowed toward requirement:

(a). 25 percent of total credit hours.

(b). If requested, documentation required to earn credit: verification form and documentation from the professional organization confirming the service.

d. Conferences/Conventions (1 conference day equals 1 credit)—attendance at a conference related to the field of psychology or a conference, which aids in the licensee's professional development.

i. Maximum allowed toward requirement:

(a). 10 percent of total credit hours.

ii. If requested, documentation required to earn credit:

(a). copy of registration materials. This credit is separate from traditional continuing education units that may be awarded at said conference.

2. Academic

a. Academic Courses (1 3-hour course or equivalent equals 20 credits)—graduate-level course related to psychologist's discipline and practice taken for credit (not audit) from a regionally accredited university or one pre-approved by the board.

i. Maximum allowed toward requirement:

(a). 50 percent of total credit hours.

ii. If requested, documentation required to earn credit:

(a). course transcript.

b. Instruction (1 23-hour course equals 20 credits; 1 full-day workshop equals 10 credits)—teaching a course in a regionally accredited institution or full day workshop presentation. Credit can only be received the first time teaching or presenting the material.

i. Maximum allowed toward requirement:

(a). 50 percent of total credit hours.

ii. If requested, documentation required to earn credit:

(a). syllabus or brochure. Materials used may be requested upon an audit.

c. Publications (1 article equals 10 credits; book chapter equals 10 credits)—author of an article for peer-reviewed publications or author, editor or co-editor of a book related to the field of psychology.

i. Maximum allowed toward requirement:

(a). 25 percent of total credit hours.

ii. If requested, documentation required to earn credit:

(b). copy of journal abstract or copy of the publication.

3. Traditional Continuing Education

a. Approved Sponsored CE (1 hour equals 1 credit)—workshops from a recognized approved sponsor

(APA or any of its approved sponsors, academies of professional specialty boards, regionally accredited colleges or universities, continuing medical education in category 1 of AMA or its subsidiaries including grand rounds).

i. Maximum allowed toward requirement:

(a). 50 percent of total credit hours.

ii. If requested, documentation required to earn credit:

(a). appropriate documentation from sponsor.

b. Self-directed Learning (1 hour equals 1 credit)—examples include reading, videos, and/or other unsponsored activities.

i. Maximum allowed toward requirement:

(a). 10 percent of total credit hours.

ii. If requested, documentation required to earn credit:

(b). completion of self-directed learning verification form.

4. Board Certification

a. American Board of Professional Psychology Certification (certification equals 40 credits)

i. Maximum allowed toward requirement:

(a). the 40 credits can be used for the full CPD requirement in the period in which certification is awarded, or 20 hours may be applied to the period in which certification is awarded and twenty may be transferred to the next reporting period;

(b). documentation required to earn credit:

(i). verification from ABPP stating date in which certification was awarded.

AUTHORITY NOTE: Promulgated in accordance with R.S. 27:2357

HISTORICAL NOTE: Promulgated by the Department of Health and Hospitals, Board of Examiners of Psychologists, LR 16:770 (September 1990), amended LR 19:46 (January 1993), LR 32:1228 (July 2006), LR 38:

§809. Reporting Requirements

A. Each psychologist shall complete, at the end of reporting periods, the continuing professional development verification form and the continuing education report and file accordingly with the board.

B. Signature. By signing the report form, the licensee signifies that the report is true and accurate.

C. Documentation. Each licensee shall retain corroborative documentation of his or her continuing professional development for two years. Although this documentation is not routinely required as part of the licensee's submission, the board may, at its discretion, request such documentation. Any misrepresentation of continuing professional development will be cause for disciplinary action by the board.

D. Biennial Reporting Period. Psychologists holding even numbered licenses must submit to the board, in even numbered years, their continuing professional development report along with their license renewal form. Psychologists holding odd numbered licenses must submit to the board, in odd numbered years, their continuing professional development report along with their license renewal form. Continuing professional development reports shall be due July 1, and considered delinquent at the close of business July 31, in the year in which their continuing professional development report is due.

AUTHORITY NOTE: Promulgated in accordance with R.S. 37:2357.

HISTORICAL NOTE: Promulgated by the Department of Health and Hospitals, Board of Examiners of Psychologists, LR 19:47 (January 1993), amended LR 32:1229 (July 2006), LR 38:

§811. Extensions/Exemptions

A. Licensees on extended active military service outside the state of Louisiana during the applicable reporting period and who do not engage in delivering psychological services within the state of Louisiana may be granted in extension or an exemption if the board receives a timely confirmation of such status.

B. Licensees who are unable to fulfill the requirement because of illness or other personal hardship may be granted an extension or an exemption if timely confirmation of such status is received by the board.

C. Newly licensed psychologists are exempt from continuing professional development requirements for the remainder of the year for which their license or certification is granted.

AUTHORITY NOTE: Promulgated in accordance with R.S. 37:2354.

HISTORICAL NOTE: Promulgated by the Department of Health and Hospitals, Board of Examiners of Psychologists, LR 19:47 (January 1993), amended LR 32:1229 (July 2006), LR 38:

§813. Noncompliance

A. Noncompliance shall include, in part, incomplete reports, unsigned reports, failure to file a report, and failure to report a sufficient number of acceptable continuing professional development credits as set forth in LAC 46:LXIII.803.

B. Failure to fulfill the requirements of the continuing professional development rule shall cause the license to lapse pursuant to R.S. 37:2357.

C. If the licensee fails to meet continuing professional development requirements by the appropriate date, the license shall be regarded as lapsed at the close of business July 31 of the year for which the licensee is seeking renewal.

D. The state Board of Examiners of Psychologists shall serve written notice of noncompliance on a licensee determined to be in noncompliance. The notice will invite the licensees to request a hearing with the board or its representative to claim an exemption or to show compliance. All hearings shall be requested by the licensee and scheduled by the board in compliance with any time limitations of the Administrative Procedures Act.

AUTHORITY NOTE: Promulgated in accordance with R.S. 37:2357.

HISTORICAL NOTE: Promulgated by the Department of Health and Hospitals, Board of Examiners of Psychologists, LR 19:47 (January 1993), amended LR 32:1229 (July 2006), LR 34:1406 (July 2008), LR 38:

§815. Reinstatement

A. For a period of two years from the date of lapse of the license, the license may be renewed upon proof of fulfilling all continuing professional development requirements applicable through the date of reinstatement and upon payment of all fees due under R.S. 37:2357.

B. After a period of two years from the date of lapse of the license, the license may be renewed by passing a new oral examination before the board and payment of a fee equivalent to the application fee and renewal fee.

AUTHORITY NOTE: Promulgated in accordance with R.S. 37:2357.

HISTORICAL NOTE: Promulgated by the Department of Health and Hospitals, Board of Examiners of Psychologists, LR 19:47 (January 1993), amended LR 38:

Family Impact Statement

The Board of Examiners of Psychologists hereby issues this Family Impact Statement as set forth in R.S. 49:972. The proposed amendments and adoption of the rules related to the utilization of assistants by psychologists are implemented to safeguard the public welfare of this state and will have no known foreseeable impact on the stability of the family; authority and rights of parents regarding the education and supervision of their children; functioning of the family; family earnings and family budget; behavior and personality responsibility of children; or the ability of the family or a local government to perform the function as contained in the proposed Rule.

Public Comments

Interested persons may submit written comments to Kelly Parker, Executive Director, 8280 YMCA Plaza Drive, Bldg. 8-B, Baton Rouge, LA 70810. All comments must be submitted by 12 p.m., September 10, 2012.

Kelly Parker
Executive Director

FISCAL AND ECONOMIC IMPACT STATEMENT FOR ADMINISTRATIVE RULES
RULE TITLE: Continuing Education

I. ESTIMATED IMPLEMENTATION COSTS (SAVINGS) TO STATE OR LOCAL GOVERNMENT UNITS (Summary)

The estimated implementation cost for this rule totals approximately $500 in FY 13 and only applies to the Board of Examiners of Psychologists. Those costs are related to publishing the proposed and final rule in the *Louisiana Register*.

II. ESTIMATED EFFECT ON REVENUE COLLECTIONS OF STATE OR LOCAL GOVERNMENTAL UNITS (Summary)

No impact on state or local government revenue collections is anticipated as a result of the proposed rule change.

III. ESTIMATED COSTS AND/OR ECONOMIC BENEFITS TO DIRECTLY AFFECTED PERSONS OR NONGOVERNMENTAL GROUPS (Summary)

This amendment provides clarification in regards to continuing education and increases the requirement in a biennial period from 30 to 40 hours for the continuing professional development of a psychologist as mandated under R.S. 37:2357. The cost of any continuing education program is to be borne by the licensee and paid directly to the entity organizing the course or program. The rule changes also include 10 newly defined categories in which a psychologist can obtain continuing education, along with new restrictions on the amount of hours that can be earned in each category, as opposed to the previous system of requirements. The amended language will have a minimal impact on licensees and is in agreement with the recommended national guidelines issued by the Association of State and Provincial Psychology Boards (ASPPB). There are approximately 670 licensed psychologists regulated by this Board. All active, full-time psychologists are required to obtain continuing education on a biannual basis in order to fulfill licensure renewal requirements.

IV. ESTIMATED EFFECT ON COMPETITION AND EMPLOYMENT (Summary)

No effect on competition and employment is anticipated as a result of this rule change.

Kelly Parker	Evan Brasseaux
Executive Director	Staff Director
1208#013	Legislative Fiscal Office

NOTICE OF INTENT

Department of Health and Hospitals
Board of Wholesale Drug Distributors

Policy and Procedures and Quarantine of Legend Drugs or Legend Devices (LAC 46:XCI.313 and 1101)

The Louisiana Board of Wholesale Drug Distributors proposes to amend LAC 46:XCI.313 and adopt §1101 in accordance with the provisions of the Administrative Procedures Act, R.S. 49:950 et seq., and R.S. 37:3467 et seq., of the Louisiana Board of Wholesale Drug Distributors Practice Act. These proposed rule amendments will support the board's ability to regulate the wholesale distribution of legend drugs and legend devices into and within the state of Louisiana in its effort to safeguard the life and health of its citizens and promote the public welfare. The proposed amendments to the Rule are set forth below.

Title 46
PROFESSIONAL AND OCCUPATION STANDARDS
Part XCI. Wholesale Drug Distributors
Chapter 3. Wholesale Drug or Device Distributors
§313. Policy and Procedures

A. - A.5. …

6. a procedure to notify the board, in writing, within three business days of discovering, or being in a position to have acquired such knowledge, of any theft or diversion of a drug or device;

7. a procedure to notify the board, in writing, within 24 hours of discovery, or being in a position to have acquired such knowledge, of any contraband, counterfeit, or misbranded drug or device in his possession, whether actual or constructive.

AUTHORITY NOTE: Promulgated in accordance with R.S. 37:3461-3482.

HISTORICAL NOTE: Promulgated by the Department of Health and Hospitals, Board of Wholesale Drug Distributors, LR 18:384 (April 1992), amended LR 29:1480 (August 2003), LR 32:400 (March 2006), LR 38:

Chapter 11. Quarantine of Legend Drugs or Legend Devices
§1101. Order of Quarantine

A. The board's inspector or executive director may issue an order of quarantine on site.

AUTHORITY NOTE: Promulgated in accordance with R.S. 37:3461-3482.

HISTORICAL NOTE: Promulgated by the Department of Health and Hospitals, Board of Wholesale Drug Distributors, LR 38:

Family Impact Statement

The proposed rule amendments have no known impact on family formation, stability, and autonomy as described in R.S. 49:972.

Public Comments

Interested parties may submit written comments to Kimberly B. Barbier, Executive Assistant, Louisiana Board of Wholesale Drug Distributors, 12091 Bricksome Avenue, Suite B, Baton Rouge, LA 70816. Comments will be accepted through the close of business on Wednesday, September 19, 2012.

Public Hearing

If it becomes necessary to convene a public hearing to receive comments in accordance with the Administrative Procedures Act, the hearing will be held on Wednesday, September 26, 2012, at 11 am at the office of the Louisiana Board of Wholesale Drug Distributors, 12091 Bricksome Avenue, Suite B, Baton Rouge, LA.

John Liggio
Executive Director

FISCAL AND ECONOMIC IMPACT STATEMENT FOR ADMINISTRATIVE RULES
RULE TITLE: Policy and Procedures and Quarantine of Legend Drugs or Legend Devices

I. ESTIMATED IMPLEMENTATION COSTS (SAVINGS) TO STATE OR LOCAL GOVERNMENT UNITS (Summary)

Estimated implementation costs to the state include those associated with publishing the rule amendment estimated at $200 in fiscal year 2013. Licensees will be informed of this rule change via the Board's regular newsletter or other direct mailings, which will result in minimal costs to the Board. There are no estimated costs to the Board resulting from §1101 as the quarantine orders will be issued during the regular inspection process Local governmental units will not incur any costs as a result of this rule.

II. ESTIMATED EFFECT ON REVENUE COLLECTIONS OF STATE OR LOCAL GOVERNMENTAL UNITS (Summary)

There will be no effect on revenue collections of state or local governmental units as there will be no increase in fees resulting from the amendments.

III. ESTIMATED COSTS AND/OR ECONOMIC BENEFITS TO DIRECTLY AFFECTED PERSONS OR NONGOVERNMENTAL GROUPS (Summary)

There are no costs and/or material economic benefits to directly affected persons or non-governmental groups from the proposed rule change which includes correction of wording in §313 and creation of Chapter 11 with regards to quarantine of legend drugs or legend devices where reasonable probability is found that the drugs or devices are adulterated, misbranded, counterfeited, or have been recalled. Any quarantined legend drugs or devices will likely result in lost profits to the distributor; however, the amount will depend on type and quantity of the drug or device being quarantined.

IV. ESTIMATED EFFECT ON COMPETITION AND EMPLOYMENT (Summary)

No impact on competition and employment is anticipated as a result of the proposed rule change.

John Liggio
Executive Director
1208#046

Evan Brasseaux
Staff Director
Legislative Fiscal Office

NOTICE OF INTENT

Department of Health and Hospitals
Bureau of Health Services Financing

Home and Community-Based Services Waivers
Standards for Participation
(LAC 50:XXI.Chapter 1)

The Department of Health and Hospitals, Bureau of Health Services Financing and the Office of Aging and Adult Services propose to repeal LAC 50:XXI.Chapter 1 in the Medical Assistance Program as authorized by R.S. 36:254 and pursuant to Title XIX of the Social Security Act. This proposed Rule is promulgated in accordance with the provisions of the Administrative Procedure Act, R.S. 49:950 et seq.

The Department of Health and Hospitals, Office of the Secretary, Bureau of Community Supports and Services adopted provisions to establish minimum standards for participation for enrolled home and community-based services (HCBS) waiver providers, with the exception of adult day health care facilities (*Louisiana Register,* Volume 29, Number 9).

The Department of Health and Hospitals, Bureau of Health Services Financing and the Office of Aging and Adult Services promulgated an Emergency Rule which repealed the provisions governing the Standards for Participation for HCBS waiver providers as a result of the promulgation of new licensing standards governing these providers which revise and stipulate the new participation requirements (*Louisiana Register*, Volume 37, Number 10). This proposed Rule is being promulgated to continue the provisions of the November 1, 2011 Emergency Rule.

Title 50
PUBLIC HEALTH—MEDICAL ASSISTANCE
Part XXI. Home and Community Based Services Waivers
Subpart 1. General Provisions
Chapter 1. Standards for Participation
§101. Provider Requirements

Repealed.

AUTHORITY NOTE: Promulgated in accordance with R.S. 36:254 and Title XIX of the Social Security Act.

HISTORICAL NOTE: Promulgated by the Department of Health and Hospitals, Office of the Secretary, Bureau of Community Supports and Services, LR 29:1829 (September 2003), repealed by the Department of Health and Hospitals, Bureau of Health Services Financing and the Office of Aging and Adult Services, LR 38:

§103. Agency Responsibilities

Repealed.

AUTHORITY NOTE: Promulgated in accordance with R.S. 36:254 and Title XIX of the Social Security Act.

HISTORICAL NOTE: Promulgated by the Department of Health and Hospitals, Office of the Secretary, Bureau of Community Supports and Services, LR 29:1833 (September 2003), repealed by the Department of Health and Hospitals, Bureau of

Health Services Financing and the Office of Aging and Adult Services, LR 38:

Implementation of the provisions of this Rule may be contingent upon the approval of the U.S. Department of Health and Human Services, Centers for Medicare and Medicaid Services (CMS), if it is determined that submission to CMS for review and approval is required.

Family Impact Statement

In compliance with Act 1183 of the 1999 Regular Session of the Louisiana Legislature, the impact of this proposed Rule on the family has been considered. It is anticipated that this proposed Rule will have no impact on family functioning, stability, or autonomy as described in R.S. 49:972.

Public Comment

Interested persons may submit written comments to J. Ruth Kennedy, Bureau of Health Services Financing, P.O. Box 91030, Baton Rouge, LA 70821-9030. She is responsible for responding to inquiries regarding this proposed Rule.

Public Hearing

A public hearing on this proposed Rule is scheduled for Wednesday, September 26, 2012 at 9:30 a.m. in Room 118, Bienville Building, 628 North Fourth Street, Baton Rouge, LA. At that time all interested persons will be afforded an opportunity to submit data, views or arguments either orally or in writing. The deadline for receipt of all written comments is 4:30 p.m. on the next business day following the public hearing.

Bruce D. Greenstein
Secretary

FISCAL AND ECONOMIC IMPACT STATEMENT FOR ADMINISTRATIVE RULES
RULE TITLE: Home and Community-Based Services Waivers—Standards for Participation

I. ESTIMATED IMPLEMENTATION COSTS (SAVINGS) TO STATE OR LOCAL GOVERNMENT UNITS (Summary)

It is anticipated that implementation of this proposed rule will have no programmatic fiscal impact to the state other than the cost of promulgation for FY 12-13. It is anticipated that $328 ($164 SGF and $164 FED) will be expended in FY 12-13 for the state's administrative expense for promulgation of this proposed rule and the final rule.

II. ESTIMATED EFFECT ON REVENUE COLLECTIONS OF STATE OR LOCAL GOVERNMENTAL UNITS (Summary)

It is anticipated that the implementation of this proposed rule will not affect revenue collections other than the federal share of the promulgation costs for FY 12-13. It is anticipated that $164 will be collected in FY 12-13 for the federal share of the expense for promulgation of this proposed rule and the final rule.

III. ESTIMATED COSTS AND/OR ECONOMIC BENEFITS TO DIRECTLY AFFECTED PERSONS OR NONGOVERNMENTAL GROUPS (Summary)

This proposed rule continues the provisions of the November 1, 2011 Emergency Rule, which repealed the provisions governing the Standards for Participation for home and community-based services waiver providers as a result of the promulgation of new licensing standards governing these providers. It is anticipated that implementation of this proposed rule will not have economic cost or benefits to directly affected persons or non-governmental groups for FY 12-13, FY 13-14 and FY 14-15.

IV. ESTIMATED EFFECT ON COMPETITION AND EMPLOYMENT (Summary)

This rule has no known effect on competition and employment.

J. Ruth Kennedy
Medicaid Director
1208#116

Gregory V. Albrecht
Chief Economist
Legislative Fiscal Office

NOTICE OF INTENT

Department of Health and Hospitals
Bureau of Health Services Financing

Inpatient Hospital Services
Non-Rural, Non-State Public Hospitals
Supplemental Payments (LAC 50:V.963)

The Department of Health and Hospitals, Bureau of Health Services Financing proposes to amend LAC 50:V. 963 in the Medical Assistance Program as authorized by R.S. 36:254 and pursuant to Title XIX of the Social Security Act. This proposed Rule is promulgated in accordance with the provisions of the Administrative Procedure Act, R.S. 49:950 et seq.

As a result of a budgetary shortfall in state fiscal year 2011, the Department of Health and Hospitals, Bureau of Health Services Financing amended the provisions governing the reimbursement methodology for inpatient hospital services to reduce the reimbursement rates for inpatient hospital services rendered by non-rural, non-state hospitals (*Louisiana Register,* Volume 37, Number 7).

The department promulgated an Emergency Rule which amended the provisions governing inpatient hospital services to revise the reimbursement methodology for non-rural, non-state public hospitals (*Louisiana Register*, Volume 37, Number 5). The department subsequently published an Emergency Rule to amend the provisions governing inpatient hospital services to provide supplemental Medicaid payments to qualifying non-rural, non-state public hospitals (*Louisiana Register*, Volume 38, Number 8). This proposed Rule is being promulgated to continue the provisions of the August 1, 2012 Emergency Rule.

Title 50
PUBLIC HEALTH—MEDICAL ASSISTANCE
Part V. Hospital Services
Subpart 1. Inpatient Hospital Services
Chapter 9. Non-Rural, Non-State Hospitals
Subchapter B. Reimbursement Methodology
§963. Public Hospitals

A. …

B. Effective for dates of service on or after August 1, 2012, quarterly supplemental payments will be issued to qualifying non-rural, non-state public hospitals for inpatient services rendered during the quarter. Payment amounts shall be reimbursed up to the Medicare inpatient upper payment limits as determined in accordance with 42 CFR §447.272.

1. Qualifying Criteria. In order to qualify for the quarterly supplemental payment, the non-rural, non-state public acute care hospital must:

a. be designated as a major teaching hospital by the department in state fiscal year 2011 (as of May 15, 2011) and have provided at least 17,000 Medicaid acute care and distinct part psychiatric unit paid days for state fiscal year 2010 dates of service; or

b. effective for dates of service on or after August 1, 2012, be located in a city with a population of over 300,000 as of the 2010 U.S. Census.

C. Each qualifying hospital shall receive quarterly supplemental payments for the inpatient services rendered during the quarter. Quarterly payments shall be the difference between each qualifying hospital's inpatient Medicaid billed charges and Medicaid payments the hospital receives for covered inpatient services provided to Medicaid recipients. Medicaid billed charges and payments will be based on a 12 consecutive month period for claims data selected by the department.

D. With respect to qualifying hospitals that are enrolled in Medicaid after December 1, 2013, projected Medicaid utilization and claims data submitted by the hospital and confirmed by the department as reasonable will be used as the basis for making quarterly supplemental payments during the hospital's start-up period.

1. For purposes of these provisions, the start-up period shall be defined as the first three years of operation.

2. During the start-up period, the department shall verify that supplemental payments do not exceed the inpatient charge differential based on each state fiscal year's claims data and shall recoup amounts determined to have been overpaid.

AUTHORITY NOTE: Promulgated in accordance with R.S. 36:254 and Title XIX of the Social Security Act.

HISTORICAL NOTE: Promulgated by the Department of Health and Hospitals, Bureau of Health Services Financing, LR 38:

Implementation of the provisions of this Rule may be contingent upon the approval of the U.S. Department of Health and Human Services, Centers for Medicare and Medicaid Services (CMS), if it is determined that submission to CMS for review and approval is required.

Family Impact Statement

In compliance with Act 1183 of the 1999 Regular Session of the Louisiana Legislature, the impact of this proposed Rule on the family has been considered. It is anticipated that this proposed Rule will have a positive impact on family functioning, stability, and autonomy as described in R.S. 49:972 by encouraging provider participation in the Hospital Program to ensure that Medicaid recipients have continued access to inpatient hospital services.

Public Comments

Interested persons may submit written comments to J. Ruth Kennedy, Bureau of Health Services Financing, P.O. Box 91030, Baton Rouge, LA 70821-9030. She is responsible for responding to inquiries regarding this proposed Rule.

Public Hearing

A public hearing on this proposed Rule is scheduled for Wednesday, September 26, 2012 at 9:30 a.m. in Room 118, Bienville Building, 628 North Fourth Street, Baton Rouge, LA. At that time all interested persons will be afforded an opportunity to submit data, views or arguments either orally or in writing. The deadline for receipt of all written comments is 4:30 p.m. on the next business day following the public hearing.

Bruce D. Greenstein
Secretary

FISCAL AND ECONOMIC IMPACT STATEMENT FOR ADMINISTRATIVE RULES
RULE TITLE: Inpatient Hospital Services Non-Rural, Non-State Public Hospitals Supplemental Payments

I. ESTIMATED IMPLEMENTATION COSTS (SAVINGS) TO STATE OR LOCAL GOVERNMENT UNITS (Summary)

It is anticipated that the implementation of this proposed rule will have no state programmatic costs in FY 12-13, but will result in estimated state programmatic costs of $2,314,926 for FY 13-14 and $4,768,747 for FY 14-15. It is anticipated that $410 ($205 SGF and $205 FED) will be expended in FY 12-13 for the state's administrative expense for promulgation of this proposed rule and the final rule. The state match requirements will be funded through an intergovernmental transfer from qualifying hospitals to the Medicaid Program.

II. ESTIMATED EFFECT ON REVENUE COLLECTIONS OF STATE OR LOCAL GOVERNMENTAL UNITS (Summary)

It is anticipated that the implementation of this proposed rule will not impact federal revenue collections in FY 12-13, but will increase federal revenue collections by approximately $4,396,950 for FY 13-14 and $9,057,717 for FY 14-15. It is anticipated that $205 will be expended in FY 12-13 for the federal administrative expenses for promulgation of this proposed rule and the final rule.

III. ESTIMATED COSTS AND/OR ECONOMIC BENEFITS TO DIRECTLY AFFECTED PERSONS OR NONGOVERNMENTAL GROUPS (Summary)

This proposed Rule, which continues the provisions of the August 1, 2012 Emergency Rule, amends the provisions governing the reimbursement methodology for inpatient hospital services to provide supplemental Medicaid payments to a qualifying non-rural, non-state public hospital [1 qualifying hospital]. It is anticipated that implementation of this proposed rule will have no fiscal impact to the Medicaid Program in FY 12-13, but will increase programmatic expenditures in the Medicaid Program by approximately $6,711,876 for FY 13-14 and $13,826,464 for FY 14-15.

IV. ESTIMATED EFFECT ON COMPETITION AND EMPLOYMENT (Summary)

It is anticipated that the implementation of this proposed rule will not have an effect on competition and employment.

J. Ruth Kennedy
Medicaid Director
1208#115

Gregory V. Albrecht
Chief Economist
Legislative Fiscal Office

NOTICE OF INTENT

Department of Health and Hospitals
Bureau of Health Services Financing

Inpatient Hospital Services
Reimbursement Methodology
Medical Education Payments
(LAC 50:V.551, 967 and 1331)

The Department of Health and Hospitals, Bureau of Health Services Financing proposes to amend LAC 50:V.551, §967 and §1331 in the Medical Assistance Program as authorized by R.S. 36:254 and pursuant to Title XIX of the Social Security Act. This proposed Rule is promulgated in accordance with the provisions of the Administrative Procedure Act, R.S. 49:950 et seq.

The Department of Health and Hospitals, Bureau of Health Services Financing adopted provisions under the Medicaid State Plan to establish a coordinated system of care through an integrated network for the delivery of healthcare services to Medicaid recipients (*Louisiana Register*, Volume 37, Number 6). This delivery system, comprised of managed care organizations (MCOs), was implemented to improve performance and health care outcomes for Medicaid recipients. The per-member-per-month reimbursements to MCOs do not include payments for medical education services rendered by participating hospitals.

Therefore, the department promulgated an Emergency Rule which amended the provisions governing the reimbursement methodology for inpatient hospital services to adopt provisions in order to continue medical education payments to state hospitals, children's specialty hospitals, and acute care hospitals classified as teaching hospitals when the hospitals are reimbursed by prepaid risk-bearing MCOs for inpatient hospital services (*Louisiana Register*, Volume 38, Number 2).

The Department of Health and Hospitals, Bureau of Health Services Financing promulgated an Emergency Rule which amended the February 1, 2012 Emergency Rule to clarify the provisions governing the reimbursement methodology for inpatient hospital services (*Louisiana Register*, Volume 38, Number 3). This proposed Rule is being promulgated to continue the provisions of the March 20, 2012 Emergency Rule.

Title 50
PUBLIC HEALTH—MEDICAL ASSISTANCE
Part V. Hospital Services
Subpart 1. Inpatient Hospital Services
Chapter 5. State Hospitals
Subchapter B. Reimbursement Methodology
§551. Acute Care Hospitals

A. - D. …

E. Effective for dates of service on or after February 1, 2012, medical education payments for inpatient services which are reimbursed by a prepaid risk-bearing managed care organization (MCO) shall be paid monthly by Medicaid as interim lump sum payments.

1. Hospitals with qualifying medical education programs shall submit a listing of inpatient claims paid each month by each MCO.

a. *Qualifying Medical Education Programs*—graduate medical education, paramedical education, and nursing schools.

2. Monthly payments shall be calculated by multiplying the number of qualifying inpatient days times the medical education costs included in each state hospital's interim per diem rate as calculated per the latest filed Medicaid cost report.

3. Final payment shall be determined based on the actual MCO covered days and allowable inpatient Medicaid medical education costs for the cost reporting period per the Medicaid cost report.

AUTHORITY NOTE: Promulgated in accordance with R.S. 36:254 and Title XIX of the Social Security Act.

HISTORICAL NOTE: Promulgated by the Department of Health and Hospitals, Bureau of Health Services Financing, LR 38:1241 (May 2012), amended LR 38:

Chapter 9. Non-Rural, Non-State Hospitals
Subchapter B. Reimbursement Methodology
§967. Children's Specialty Hospitals

A. - H. …

I. Effective for dates of service on or after February 1, 2012, medical education payments for inpatient services which are reimbursed by a prepaid risk-bearing managed care organization (MCO) shall be paid by Medicaid monthly as interim lump sum payments.

1. Hospitals with qualifying medical education programs shall submit a listing of inpatient claims paid each month by each MCO.

a. *Qualifying Medical Education Programs*—graduate medical education, paramedical education, and nursing schools.

2. Monthly payments shall be calculated by multiplying the number of qualifying inpatient days times the medical education costs included in each children's specialty hospital's interim per diem rate as calculated per the latest filed Medicaid cost report.

3. Final payment shall be determined based on the actual MCO covered days and medical education costs for the cost reporting period per the Medicaid cost report. Reimbursement shall be at the same percentage that is reimbursed for fee-for-service covered Medicaid costs after application of reimbursement caps as specified in §967.A-C and reductions specified in §967.F-H.

AUTHORITY NOTE: Promulgated in accordance with R.S. 36:254 and Title XIX of the Social Security Act.

HISTORICAL NOTE: Promulgated by the Department of Health and Hospitals, Bureau of Health Services Financing, LR 36:2562 (November 2010), amended LR 37:2162 (July 2011), LR 38:

Chapter 13. Teaching Hospitals
Subchapter B. Reimbursement Methodology
§1331. Acute Care Hospitals

A. - E. …

F. Effective for dates of service on or after February 1, 2012, medical education payments for inpatient services which are reimbursed by a prepaid risk-bearing managed care organization (MCO) shall be paid monthly by Medicaid as interim lump sum payments.

1. Hospitals with qualifying medical education programs shall submit a listing of inpatient claims paid each month by each MCO.

a. *Qualifying Medical Education Programs*—graduate medical education, paramedical education, and nursing schools.

2. Qualifying hospitals must have a direct medical education add-on component included in their prospective Medicaid per diem rates as of January 31, 2012 which was carved out of the per diem rate reported to the MCOs.

3. Monthly payments shall be calculated by multiplying the number of qualifying inpatient days submitted by the medical education costs component included in each hospital's fee-for-service prospective per diem rate. Monthly payment amounts shall be verified by the department semi-annually using reports of MCO covered days generated from encounter data. Payment adjustments or recoupments shall be made as necessary based on the MCO encounter data reported to the department.

AUTHORITY NOTE: Promulgated in accordance with R.S. 36:254 and Title XIX of the Social Security Act.

HISTORICAL NOTE: Promulgated by the Department of Health and Hospitals, Bureau of Health Services Financing, LR 34:877 (May 2008), LR 38:

Implementation of the provisions of this Rule may be contingent upon the approval of the U.S. Department of Health and Human Services, Centers for Medicare and Medicaid Services (CMS) if it is determined that submission to CMS for review and approval is required.

Family Impact Statement

In compliance with Act 1183 of the 1999 Regular Session of the Louisiana Legislature, the impact of this proposed Rule on the family has been considered. It is anticipated that this proposed Rule will have no impact on family functioning, stability, and autonomy as described in R.S. 49:972.

Public Comments

Interested persons may submit written comments to J. Ruth Kennedy, Bureau of Health Services Financing, P.O. Box 91030, Baton Rouge, LA 70821-9030. She is responsible for responding to inquiries regarding this proposed Rule.

Public Hearing

A public hearing on this proposed Rule is scheduled for Wednesday, September 26, 2012 at 9:30 a.m. in Room 118, Bienville Building, 628 North Fourth Street, Baton Rouge, LA. At that time all interested persons will be afforded an opportunity to submit data, views or arguments either orally or in writing. The deadline for receipt of all written comments is 4:30 p.m. on the next business day following the public hearing.

Bruce D. Greenstein
Secretary

FISCAL AND ECONOMIC IMPACT STATEMENT FOR ADMINISTRATIVE RULES
RULE TITLE: Inpatient Hospital Services Reimbursement Methodology Medical Education Payments

I. ESTIMATED IMPLEMENTATION COSTS (SAVINGS) TO STATE OR LOCAL GOVERNMENT UNITS (Summary)

It is anticipated that implementation of this proposed rule will have no programmatic fiscal impact to the state other than the cost of promulgation for FY 12-13. It is anticipated that $574 ($287 SGF and $287 FED) will be expended in FY 12-13 for the state's administrative expense for promulgation of this proposed rule and the final rule.

II. ESTIMATED EFFECT ON REVENUE COLLECTIONS OF STATE OR LOCAL GOVERNMENTAL UNITS (Summary)

It is anticipated that the implementation of this proposed rule will not affect revenue collections other than the federal share of the promulgation costs for FY 12-13. It is anticipated that $287 will be collected in FY 12-13 for the federal share of the expense for promulgation of this proposed rule and the final rule.

III. ESTIMATED COSTS AND/OR ECONOMIC BENEFITS TO DIRECTLY AFFECTED PERSONS OR NONGOVERNMENTAL GROUPS (Summary)

This proposed rule continues the provisions of the March 20, 2012 Emergency Rule which clarifies the provisions governing the reimbursement methodology for inpatient hospital services in order to continue medical education payments to state hospitals, children's specialty hospitals, and acute care hospitals classified as teaching hospitals when the hospitals are reimbursed by prepaid risk-bearing managed care organizations (MCO) for inpatient hospital services. Medical education payments are carved out of the per member per month payments to MCOs and will continue to be paid through the fee-for-service program. It is anticipated that implementation of this proposed rule will not have economic cost or benefits to directly affected persons or non-governmental groups for FY 12-13, FY 13-14, and FY 14-15 since the payments in the same amounts will be made to hospitals.

IV. ESTIMATED EFFECT ON COMPETITION AND EMPLOYMENT (Summary)

This rule has no known effect on competition and employment.

J. Ruth Kennedy
Medicaid Director
1208#114

Gregory V. Albrecht
Chief Economist
Legislative Fiscal Office

NOTICE OF INTENT

Department of Health and Hospitals
Bureau of Health Services Financing

Outpatient Hospital Services
State-Owned Hospitals
Medical Education Payments
(LAC 50:V.5319, 5519, 5919 and 6127)

The Department of Health and Hospitals, Bureau of Health Services Financing proposes to adopt LAC 50:V.5319, §5519, §5919 and amends §6127 in the Medical Assistance Program as authorized by R.S. 36:254 and pursuant to Title XIX of the Social Security Act. This proposed Rule is promulgated in accordance with the provisions of the Administrative Procedure Act, R.S. 49:950 et seq.

The Department of Health and Hospitals, Bureau of Health Services Financing adopted provisions under the Medicaid State Plan to establish a coordinated system of care through an integrated network for the delivery of healthcare services to Medicaid recipients (*Louisiana Register*, Volume 37, Number 6). This delivery system, comprised of managed care organizations (MCOs), was implemented to improve performance and health care outcomes for Medicaid recipients. The per member per month reimbursements to MCOs do not include payments

for medical education services rendered by participating hospitals.

Therefore, the department promulgated an Emergency Rule which amended the provisions governing the reimbursement methodology for outpatient hospital services in order to continue medical education payments to state-owned hospitals when the hospitals are reimbursed by prepaid risk-bearing MCOs for outpatient surgeries, clinic services, rehabilitation services, and other covered outpatient hospital services (*Louisiana Register*, Volume 38, Number 2).

The Department of Health and Hospitals, Bureau of Health Services Financing promulgated an Emergency Rule which amended the February 10, 2012 Emergency Rule to clarify the provisions governing the reimbursement methodology for outpatient hospital services (*Louisiana Register*, Volume 38, Number 3). This proposed Rule is being promulgated to continue the provisions of the March 20, 2012 Emergency Rule.

Title 50

PUBLIC HEALTH—MEDICAL ASSISTANCE

Part V. Hospital Services

Subpart 5. Outpatient Hospital Services

Chapter 53. Outpatient Surgery

Subchapter B. Reimbursement Methodology

§5319. State-Owned Hospitals

A. Effective for dates of service on or after February 10, 2012, medical education payments for outpatient surgery services which are reimbursed by a prepaid risk-bearing managed care organization (MCO) shall be reimbursed by Medicaid annually through the Medicaid cost report settlement process.

1. For purposes of these provisions, qualifying medical education programs are defined as graduate medical education, paramedical education, and nursing schools.

2. Final payment shall be determined based on the actual MCO covered outpatient surgery services and Medicaid medical education costs for the cost reporting period per the Medicaid cost report.

AUTHORITY NOTE: Promulgated in accordance with R.S. 36:254 and Title XIX of the Social Security Act.

HISTORICAL NOTE: Promulgated by the Department of Health and Hospitals, Bureau of Health Services Financing, LR 38:

Chapter 55. Clinic Services

Subchapter B. Reimbursement Methodology

§5519. State-Owned Hospitals

A. Effective for dates of service on or after February 10, 2012, medical education payments for outpatient clinic services which are reimbursed by a prepaid risk-bearing managed care organization (MCO) shall be reimbursed by Medicaid annually through the Medicaid cost report settlement process.

1. Qualifying medical education programs are defined as graduate medical education, paramedical education, and nursing schools.

2. Final payment shall be determined based on the actual MCO covered outpatient clinic services and Medicaid medical education costs for the cost reporting period per the Medicaid cost report.

AUTHORITY NOTE: Promulgated in accordance with R.S. 36:254 and Title XIX of the Social Security Act.

HISTORICAL NOTE: Promulgated by the Department of Health and Hospitals, Bureau of Health Services Financing, LR 38:

Chapter 59. Rehabilitation Services

Subchapter B. Reimbursement Methodology

§5519. State-Owned Hospitals

A. Effective for dates of service on or after February 10, 2012, medical education payments for outpatient rehabilitation services which are reimbursed by a prepaid risk-bearing managed care organization (MCO) shall be reimbursed by Medicaid annually through the Medicaid cost report settlement process.

1. Qualifying medical education programs are defined as graduate medical education, paramedical education, and nursing schools.

2. Final payment shall be determined based on the actual MCO covered outpatient rehabilitation services and Medicaid medical education costs for the cost reporting period per the Medicaid cost report.

AUTHORITY NOTE: Promulgated in accordance with R.S. 36:254 and Title XIX of the Social Security Act.

HISTORICAL NOTE: Promulgated by the Department of Health and Hospitals, Bureau of Health Services Financing, LR 38:

Chapter 61. Other Outpatient Hospital Services

Subchapter B. Reimbursement Methodology

§6127. State-Owned Hospitals

A. …

B. Effective for dates of service on or after February 10, 2012, medical education payments which are reimbursed by a prepaid risk-bearing managed care organization (MCO) shall be reimbursed by Medicaid annually through the Medicaid cost report settlement process to state-owned hospitals for outpatient hospital services other than outpatient surgery services, clinic services, laboratory services, and rehabilitation services.

1. Qualifying medical education programs are defined as graduate medical education, paramedical education, and nursing schools.

2. Final payment shall be determined based on the actual MCO covered outpatient services and Medicaid medical education costs for the cost reporting period per the Medicaid cost report.

AUTHORITY NOTE: Promulgated in accordance with R.S. 36:254 and Title XIX of the Social Security Act.

HISTORICAL NOTE: Promulgated by the Department of Health and Hospitals, Office of the Secretary, Bureau of Health Services Financing, LR 35:957 (May 2009), amended by the Department of Health and Hospitals, Bureau of Health Services Financing, LR 38:

Implementation of the provisions of this Rule may be contingent upon the approval of the U.S. Department of Health and Human Services, Centers for Medicare and Medicaid Services (CMS) if it is determined that submission to CMS for review and approval is required.

Family Impact Statement

In compliance with Act 1183 of the 1999 Regular Session of the Louisiana Legislature, the impact of this proposed Rule on the family has been considered. It is anticipated that this proposed Rule will have no impact on family functioning, stability, and autonomy as described in R.S. 49:972.

Public Comments

Interested persons may submit written comments to J. Ruth Kennedy, Bureau of Health Services Financing, P.O. Box 91030, Baton Rouge, LA 70821-9030. She is

responsible for responding to inquiries regarding this proposed Rule.

Public Hearing

A public hearing on this proposed Rule is scheduled for Wednesday, September 26, 2012 at 9:30 a.m. in Room 118, Bienville Building, 628 North Fourth Street, Baton Rouge, LA. At that time all interested persons will be afforded an opportunity to submit data, views or arguments either orally or in writing. The deadline for receipt of all written comments is 4:30 p.m. on the next business day following the public hearing.

Bruce D. Greenstein
Secretary

FISCAL AND ECONOMIC IMPACT STATEMENT FOR ADMINISTRATIVE RULES
RULE TITLE: Outpatient Hospital Services, State-Owned Hospitals, Medical Education Payments

I. ESTIMATED IMPLEMENTATION COSTS (SAVINGS) TO STATE OR LOCAL GOVERNMENT UNITS (Summary)

It is anticipated that implementation of this proposed rule will have no programmatic fiscal impact to the state other than the cost of promulgation for FY 12-13. It is anticipated that $574 ($287 SGF and $287 FED) will be expended in FY 12-13 for the state's administrative expense for promulgation of this proposed rule and the final rule.

II. ESTIMATED EFFECT ON REVENUE COLLECTIONS OF STATE OR LOCAL GOVERNMENTAL UNITS (Summary)

It is anticipated that the implementation of this proposed rule will not affect revenue collections other than the federal share of the promulgation costs for FY 12-13. It is anticipated that $287 will be collected in FY 12-13 for the federal share of the expense for promulgation of this proposed rule and the final rule.

III. ESTIMATED COSTS AND/OR ECONOMIC BENEFITS TO DIRECTLY AFFECTED PERSONS OR NONGOVERNMENTAL GROUPS (Summary)

This proposed rule continues the provisions of the March 20, 2012 Emergency Rule which clarifies the provisions governing the reimbursement methodology for inpatient hospital services in order to continue medical education payments to state hospitals, children's specialty hospitals, and acute care hospitals classified as teaching hospitals when the hospitals are reimbursed by prepaid risk-bearing managed care organizations (MCO) for inpatient hospital services. Medical education payments are carved out of the per member per month payments to MCOs and will continue to be paid through the fee-for-service program. It is anticipated that implementation of this proposed rule will not have economic cost or benefits to directly affected persons or non-governmental groups for FY 12-13, FY 13-14, and FY 14-15 since the payments in the same amounts will be made to hospitals.

IV. ESTIMATED EFFECT ON COMPETITION AND EMPLOYMENT (Summary)

This rule has no known effect on competition and employment.

J. Ruth Kennedy
Medicaid Director
1208#113

Gregory V. Albrecht
Chief Economist
Legislative Fiscal Office

NOTICE OF INTENT

Department of Health and Hospitals
Bureau of Health Services Financing

Surveillance and Utilization Review Subsystem
(LAC 48:I.Chapters 41 and 42)

The Department of Health and Hospitals, Bureau of Health Services Financing proposes to amend LAC 50:I.Chapters 41 and 42 in the Medical Assistance Program as authorized by R.S. 36:254 and pursuant to Title XIX of the Social Security Act. This proposed Rule is promulgated in accordance with the provisions of the Administrative Procedure Act, R.S. 49:950, et seq.

The Department of Health and Hospitals, Office of the Secretary, Bureau of Health Services Financing repromulgated the provisions governing the Surveillance and Utilization Review System (SURS) to move the provisions from Part II to Part I in Title 50 of the *Louisiana Administrative Code* for topical placement and renumbered the provisions for future expansion (*Louisiana Register*, Volume 29, Number 4).

The Department of Health and Hospitals, Bureau of Health Services Financing promulgated an Emergency Rule which amended the provisions governing SURS to ensure compliance with the payment suspension requirements of U.S. Public Law 111-148, the Patient Protection and Affordable Care Act (*Louisiana Register*, Volume 38, Number 7). This proposed Rule is being promulgated to continue the provisions of the August 1, 2012 Emergency Rule.

Title 50
PUBLIC HEALTH—MEDICAL ASSISTANCE
Part I. Administration
Subpart 5. Provider Fraud and Recovery
Chapter 41. Surveillance and Utilization Review Subsystem (SURS)
Subchapter A. General Provisions
§4101. Foreword

A. The Medical Assistance Program is a four-party arrangement: the taxpayer; the government; the beneficiaries; and the providers. The secretary of the Department of Health and Hospitals (DHH), through this Chapter 41, recognizes:

1. the obligation to the taxpayers to assure the fiscal and programmatic integrity of the Medical Assistance Program. The secretary has zero tolerance for fraudulent, willful, abusive or other ill practices perpetrated upon the Medical Assistance Program by providers, providers-in-fact and others, including beneficiaries. Such practices will be vigorously pursued to the fullest extent allowed under the applicable laws and regulations; and

2. the responsibility to assure that actions brought in pursuit of providers, providers-in-fact and others, including beneficiaries, under this regulation are not frivolous, vexatious or brought primarily for the purpose of harassment. Providers, providers-in-fact and others, including beneficiaries, must recognize that they have an

obligation to obey and follow all applicable laws, regulations, policies, criteria, and procedures.

3. Repealed.

B. - B.3. …

4. establish the procedures to be used when sanctioning or otherwise restricting a provider and others under the Medicaid Program.

C. The purpose of this regulation is to assure the quality, quantity, and need for such goods, services, and supplies and to provide for the sanctioning of those who do not provide adequate goods, services, or supplies or request payment or reimbursement for goods, services, or supplies which do not comply with the requirements of federal laws, federal regulations, state laws, state regulations, or the rules, procedures, criteria or policies governing providers and others under the Medicaid Program.

D. A further purpose of this regulation is to assure the integrity of the Medicaid Program by providing methods and procedures to:

1. - 6. …

E. Nothing in this Chapter 41 is intended, nor shall it be construed, to grant any person any right to participate in the Medicaid Program which is not specifically granted by federal law or the laws of this state or to confer upon any person's rights or privileges which are not contained within this regulation.

F. Repealed.

AUTHORITY NOTE: Promulgated in accordance with R.S. 36:254, 46:437.4 and 46:437.1-46:440.3 (Medical Assistance Program Integrity Law).

HISTORICAL NOTE: Promulgated by the Department of Health and Hospitals, Office of the Secretary, Bureau of Health Services Financing, LR 29:584 (April 2003), amended by the Department of Health and Hospitals, Bureau of Health Services Financing, LR 38:

§4103. Definitions

A. The following specific terms shall apply to all those participating in the Medicaid Program, either directly or indirectly, and shall be applied when making any and all determinations related to this and other departmental regulations, rules, policies, criteria, and procedures applicable to the Medicaid program and its programs.

* * *

Claim—any request or demand, including any and all documents or information required by federal or state law or by rule made against Medical Assistance Program funds for payment. A claim may be based on costs or projected costs and includes any entry or omission in a cost report or similar document, book of account, or any other document which supports, or attempts to support, the claim. Each claim may be treated as a separate claim, or several claims may be combined to form one claim.

Claims or Payment Review—the process of reviewing documents or other information or sources required or related to the payment or reimbursement to a provider by the department, the department's contractor(s), BHSF, SURS, or the fiscal intermediary in order to determine if the bill or claim should be or should have been paid or reimbursed. Payment and claim reviews are the same process.

* * *

Corrective Action Plan—a written plan, short of an administrative sanction, agreed to by a provider, provider-in-fact or other person with the department, BHSF, or Program Integrity designed to remedy any inefficient, aberrant or prohibited practices by a provider, provider-in-fact or other person. A corrective action plan is not a sanction.

Credible Allegation of Fraud—an allegation which has been verified by BHSF or Program Integrity, from any source, including, but not limited to the following:

a. fraud hotline complaints;

b. claims data mining;

c. patterns identified through provider audits, civil false claims case; and

d. law enforcement investigations.

NOTE: Allegations are considered to be credible when they have indicia of reliability and BHSF or Program Integrity has reviewed all allegations, facts, and evidence carefully and acts judiciously on a case-by-case basis.

* * *

Director of Bureau of Health Services Financing—the director of BHSF or authorized designee.

* * *

Exclusion from Participation—a sanction that terminates a provider, provider-in-fact or other person from participation in the Medicaid Program, and cancels the provider's provider agreement.

a. …

b. A provider, provider-in-fact, or any other person who is excluded may not be a provider or provider-in-fact, agent of a provider, or affiliate of a provider or have a direct or indirect ownership in any provider during their period of exclusion.

False or Fraudulent Claim—a claim which the provider or his billing agent submits knowing the claim to be false, fictitious, untrue, or misleading in regard to any material information. *False or fraudulent claim* shall include a claim which is part of a pattern of incorrect submissions in regard to material information or which is otherwise part of a pattern in violation of applicable federal or state law, rule, or policy.

* * *

Finalized Sanction or Final Administrative Adjudication or Order—a final order imposed pursuant to an administrative adjudication that has been signed by the Secretary or the secretary's authorized designee.

Fiscal Agent or Fiscal Intermediary—an organization or legal entity with whom the department contracts to provide for the processing, review of or payment of provider bills and claims.

* * *

Indirect Ownership—the owner has an ownership interest in the provider through some other entity, whether said ownership interest, at any level, is in whole or in part.

* * *

Informal Hearing—an informal conference between the provider, provider-in-fact, or other persons and the director of Program Integrity or his/her designee related to a notice of corrective action, notice of withholding of payments or notice of sanction.

Investigator or Analyst—any person authorized to conduct investigations on behalf of the department, BHSF, Program Integrity, SURS, or the fiscal intermediary, either through employment or contract for the purposes of payment or programmatic review.

* * *

Law—any written constitution, statutory laws, rules, collection of rules, or code prescribed under the authority of the governments of the state of Louisiana or the United States.

Louisiana Administrative Code (LAC)—the Louisiana Administrative Code.

* * *

Medical Assistance Program or *Medicaid*—the *Medical Assistance Program* (Title XIX of the Social Security Act), commonly referred to as *Medicaid*, and other programs operated by and funded in the department, which provide payment to providers.

* * *

Policies, Criteria or Procedure—those things established or provided for through departmental manuals, provider updates, remittance advice, memorandums, or bulletins issued by the Medical Assistance Program or the department.

* * *

Provider Agreement—the document(s) signed by or on behalf of the provider and those things established or provided for in R.S. 46:437.11-437.14 or by rule, which enrolls the provider in the Medical Assistance Program or one or more of its programs and grants to the provider a provider number and the privilege to participate in the Medicaid Program or one or more of its programs.

Provider Enrollment—the process through which a person becomes enrolled in the Medical Assistance Program or one of its programs for the purpose of providing goods, services, or supplies to one or more Medicaid recipients.

Provider-in-Fact—person who directly or indirectly participates in management decisions, has an ownership interest in the provider, or other persons defined as a *provider-in-fact* by federal or state law or by rule. A person is presumed to be a *provider-in-fact* if the person is:

a. - f. …

g. an agent of the provider or a billing.

* * *

Recovery—the collection of overpayments, damages, fines, penalties, costs, expenses, restitution, attorney fees, interest, or settlement amounts.

Referring Provider—any provider, provider-in-fact or anyone operating on the provider's behalf who refers a recipient to another person for the purpose of providing goods, services, or supplies.

* * *

Statistical Sample—a statistical formula and sampling technique used to produce a statistical extrapolation of the amount of overpayment made to a provider.

* * *

Surveillance and Utilization Review Subsystem (SURS)—the section within the department assigned to identify providers for review, conduct payment reviews, and sanction providers resulting from payments to and claims from providers, and any other functions or duties assigned by the secretary.

Suspension from Participation—Repealed.

Terms of the Provider Agreement—Repealed.

* * *

Withhold Payment—to reduce or adjust the amount, in whole or in part, to be paid to a provider for pending or future claims during the time of a criminal, civil, or departmental investigation, departmental proceeding, or claims review of the provider.

* * *

B. …

AUTHORITY NOTE: Promulgated in accordance with R.S. 36:254, 46:437.4 and 46:437.1-46:440.3 (Medical Assistance Program Integrity Law).

HISTORICAL NOTE: Promulgated by the Department of Health and Hospitals, Office of the Secretary, Bureau of Health Services Financing, LR 29:584 (April 2003), amended by the Department of Health and Hospitals, Bureau of Health Services Financing, LR 38:

§4105. Material

A. The secretary of the Department of Health and Hospitals establishes the following definitions of Material.

1. For the purpose of R.S. 46:438.8 as required under R.S. 46:438.8(D), in determining whether a pattern of incorrect submissions exists in regards to an alleged false or fraudulent claim the incorrect submissions must be 5 percent or more of the total claims submitted, or to be submitted, by the provider during the period covered in the civil action filed or to be filed. The total amount of claims for the purpose of this provision is the total number of claims submitted, or to be submitted, by the provider during the period of time and type or kind of claim which is the subject of the civil action under R.S. 46:438.8.

2. Statistically valid sampling techniques may be used by either party to prove or disprove whether the pattern was material.

3. Repealed.

B. …

AUTHORITY NOTE: Promulgated in accordance with R.S. 36:254, 46:437.4 and 46:437.1-46:440.3 (Medical Assistance Program Integrity Law).

HISTORICAL NOTE: Promulgated by the Department of Health and Hospitals, Office of the Secretary, Bureau of Health Services Financing, LR 29:587 (April 2003), amended by the Department of Health and Hospitals, Bureau of Health Services Financing, LR 38:

§4107. Statistical Sampling

A. …

B. A valid sampling technique may be used to produce an extrapolation of the amount of overpayment made to a provider or to show the number of violations committed by a provider.

AUTHORITY NOTE: Promulgated in accordance with R.S. 36:254, 46:437.4 and 46:437.1-46:440.3 (Medical Assistance Program Integrity Law).

HISTORICAL NOTE: Promulgated by the Department of Health and Hospitals, Office of the Secretary, Bureau of Health Services Financing, LR 29:587 (April 2003), amended by the Department of Health and Hospitals, Bureau of Health Services Financing, LR 38:

Subchapter B. Prepayment or Post-Payment Claims Review

§4115. Departmental and Provider Obligations

A. The department, through the secretary, has an obligation, imposed by federal and state laws and regulations, to:

1. …

a. Payments made by the Medicaid Program are subject to review by DHH, Program Integrity Division, a contractor to DHH, or the fiscal intermediary at anytime to

ensure the quality, quantity, and need for goods, services, or supplies provided to or for a recipient by a provider;

b. it is the function of the Program Integrity Division (PID) and the Surveillance and Utilization Review Subsystem (SURS) to provide for and administer the utilization review process within the department;

2. …

3. recognize the need to obtain advice from applicable professions and individuals concerning the standards to be applied under this Chapter;

4. recognize the right of each individual to exercise all rights and privileges afforded to that individual under the law including, but not limited to, the right to counsel as provided under the applicable laws.

5. Repealed.

B. Providers have no right to receive payment for bills or claims submitted to BHSF or its fiscal intermediary. Providers only have a right to receive payment for valid claims. Payment of a bill or claim does not constitute acceptance by the department or its fiscal intermediary that the bill or claim is a valid claim. The provider is responsible for maintaining all records necessary to demonstrate that a bill or claim is in fact a valid claim. It is the provider's obligation to demonstrate that the bill or claim submitted was for goods, services, or supplies:

1. …

2. were medically necessary;

3. were provided by, or authorized by, an individual with the necessary qualifications to make that determination; and

4. - 5. …

C. The provider must maintain and make available for inspection all documents required to demonstrate that a bill or claim is a valid claim. Failure on the part of the provider to adequately document means that the goods, services, or supplies will not be paid for or reimbursed by the Medicaid program.

D. …

E. Providers, providers-in-fact and others, including recipients, must recognize that they have an obligation to obey and follow all applicable laws, regulations, policies, criteria, and procedures. In the case of an action brought for incorrect submissions, providers and providers-in-fact recognize the department may impose judicial interest on any outstanding recovery or recoupment, or reasonable cost and expenses incurred as the direct result of the investigation or review, including, but not limited to, the time and expenses incurred by departmental employees or agents and the fiscal intermediary's employees or agents.

F. …

AUTHORITY NOTE: Promulgated in accordance with R.S. 36:254, 46:437.4 and 46:437.1-46:440.3 (Medical Assistance Program Integrity Law).

HISTORICAL NOTE: Promulgated by the Department of Health and Hospitals, Office of the Secretary, Bureau of Health Services Financing, LR 29:587 (April 2003), amended by the Department of Health and Hospitals, Bureau of Health Services Financing, LR 38:

§4117. Claims Review

A. …

1. Prepayment Review

a. Upon concurrence of the director of BHSF and the director of Program Integrity, bills or claims submitted by a provider may be reviewed by BHSF, its contractor(s), or its fiscal intermediary prior to the issuing of or denial of payment or reimbursement.

b. If, during the prepayment review process, it is determined that the provider may be overpaid, BHSF, its contractor(s), or its fiscal intermediary must conduct an investigation to determine the reasons for and estimates of the amount of the potential overpayments.

i. If it is determined that evidence exists which would lead the director of BHSF and the director of Program Integrity to believe that the provider, provider-in-fact, agent of the provider, or affiliate of the provider has engaged in fraudulent, false, or fictitious billing practices or willful misrepresentation, current and future payments shall be withheld, suspended, or zero paid.

ii. If it is determined that evidence exists which would lead the director of BHSF and the director of Program Integrity to believe that overpayments may have occurred through reasons other than fraudulent, false or fictitious billing or willful misrepresentation, current and future payments may be withheld, suspended, or zero paid.

c. Prepayment review is not a sanction and cannot be appealed nor is it subject to an informal hearing. In the case of an ongoing criminal or outside governmental investigation, information related to the investigation shall not be disclosed to the provider, provider-in-fact or other person unless release of such information is otherwise authorized or required under law. Denials or refusals to pay individual bills or claims that are the result of the edit and audit system are not withholdings of payments.

d. …

2. Post-Payment Review

a. Providers have a right to receive payment only for those bills that are valid claims. A person has no property interest in any payments or reimbursements from Medicaid, which are determined to be an overpayment or are subject to payment review. After payment to a provider, BHSF, its contractor(s), or its fiscal intermediary may review any or all payments made to a provider for the purpose of determining if the amounts paid were for valid claims.

b. If, during the post-payment review process, it is determined that the provider may have been overpaid, BHSF, its contractor(s), or its fiscal intermediary must conduct an investigation to determine the reasons for and estimated amounts of the alleged overpayments.

i. If it is determined that evidence exists that would lead the director of BHSF and the director of Program Integrity to believe that the provider, provider-in-fact, agent of the provider, or affiliate of the provider may have engaged in fraudulent, false, or fictitious billing practices or willful misrepresentation, current and future payments shall be withheld, suspended and/or zero paid.

ii. If it is determined that evidence exists that overpayments may have occurred through reasons other than fraud or willful misrepresentation, current and future payments may be withheld, suspended and/or zero paid.

c. Post-payment review resulting in a sanction(s) is appealable and subject to an informal hearing. In the case of an ongoing criminal or outside government investigation, information related to the investigation shall not be disclosed to the provider, provider-in-fact or other person. Denials or

refusals to pay individual bills that are the result of the edit and audit system are not withholdings of payments.

d. …

AUTHORITY NOTE: Promulgated in accordance with R.S. 36:254, 46:437.4 and 46:437.1-46:440.3 (Medical Assistance Program Integrity Law).

HISTORICAL NOTE: Promulgated by the Department of Health and Hospitals, Office of the Secretary, Bureau of Health Services Financing, LR 29:588 (April 2003), amended by the Department of Health and Hospitals, Bureau of Health Services Financing, LR 38:

§4119. Claims Review Scope and Extent

A. …

B. The length of time a provider is on prepayment or post-payment review shall be at the sole discretion of the director of BHSF and the director of Program Integrity.

AUTHORITY NOTE: Promulgated in accordance with R.S. 36:254, 46:437.4 and 46:437.1-46:440.3 (Medical Assistance Program Integrity Law).

HISTORICAL NOTE: Promulgated by the Department of Health and Hospitals, Office of the Secretary, Bureau of Health Services Financing, LR 29:589 (April 2003), amended by the Department of Health and Hospitals, Bureau of Health Services Financing, LR 38:

Subchapter C. Investigations

§4127. Formal or Informal Investigations

Repealed.

AUTHORITY NOTE: Promulgated in accordance with R.S. 36:254, 46:153 and 46:442.1, 46:437.4 and 46:437.1-46:440.3 (Medical Assistance Program Integrity Law).

HISTORICAL NOTE: Promulgated by the Department of Health and Hospitals, Office of the Secretary, Bureau of Health Services Financing, LR 29:589 (April 2003), repealed by the Department of Health and Hospitals, Bureau of Health Services Financing, LR 38:

§4129. Investigations

A. An investigation may be initiated without cause and requires no justification. The provider and provider-in-fact of the provider have an affirmative duty to cooperate fully with the investigation. The provider and provider-in-fact shall:

1. make all records requested as part of the investigation available for review or copying including, but not limited to, any financial or other business records of the provider or any or all records related to the recipients;

2. make available all agents and affiliates of the provider for the purpose of being interviewed during the course of the investigation at the provider's ordinary place of business or any other mutually agreeable location; and

3. allow the department to take statements from the provider, provider-in-fact, agents of the provider, and any affiliates of the provider, as well as any recipients who have received goods, services, or supplies from the provider or whom the provider has claimed to have provided goods, services, or supplies.

B. The provider and provider-in-fact of the provider have an affirmative duty to cooperate fully with the department and the department's agents, including full and truthful disclosure of all information requested and questions asked.

AUTHORITY NOTE: Promulgated in accordance with R.S. 36:254, 46:153 and 46:442.1, 46:437.4 and 46:437.1-46:440.3 (Medical Assistance Program Integrity Law).

HISTORICAL NOTE: Promulgated by the Department of Health and Hospitals, Office of the Secretary, Bureau of Health Services Financing, LR 29:589 (April 2003), amended by the Department of Health and Hospitals, Bureau of Health Services Financing, LR 38:

§4131. Formal Investigatory Process

Repealed.

AUTHORITY NOTE: Promulgated in accordance with R.S. 36:254, 46:153 and 46:442.1, 46:437.4 and 46:437.1-46:440.3 (Medical Assistance Program Integrity Law).

HISTORICAL NOTE: Promulgated by the Department of Health and Hospitals, Office of the Secretary, Bureau of Health Services Financing, LR 29:589 (April 2003), repealed by the Department of Health and Hospitals, Bureau of Health Services Financing, LR 38:

§4133. Investigatory Discussion

Repealed.

AUTHORITY NOTE: Promulgated in accordance with R.S. 36:254, 46:437.4 and 46:437.1-46:440.3 (Medical Assistance Program Integrity Law).

HISTORICAL NOTE: Promulgated by the Department of Health and Hospitals, Office of the Secretary, Bureau of Health Services Financing, LR 29:589 (April 2003), repealed by the Department of Health and Hospitals, Bureau of Health Services Financing, LR 38:

§4135. Written Investigatory Reports

Repealed.

AUTHORITY NOTE: Promulgated in accordance with R.S. 36:254, 46:437.4 and 46:437.1-46:440.3 (Medical Assistance Program Integrity Law).

HISTORICAL NOTE: Promulgated by the Department of Health and Hospitals, Office of the Secretary, Bureau of Health Services Financing, LR 29:590 (April 2003), repealed by the Department of Health and Hospitals, Bureau of Health Services Financing, LR 38:

Subchapter D. Conduct

§4147. Violations

A. The following is a list of violations.

1. Failure to comply with any or all federal or state laws, regulations, policy, or rules applicable to the Medical Assistance Program or a program of the Medical Assistance Program in which the provider, provider-in-fact, agent of the provider, billing agent, affiliate or other person is participating.

a. - b. …

c. Requirements or conditions imposed by a regulation can only be waived, modified, or changed through formal promulgation of a new or amended regulation, unless authority to do so is specifically provided for in the regulation.

d. Providers, providers-in-fact are required and have an affirmative duty to fully inform all their agents and affiliates, who are performing any function connected to the provider's activities related to the Medicaid Program, of the applicable laws, regulations, or rules.

e. Providers, providers-in-fact, agents of providers, billing agents, and affiliates of providers are presumed to know the law, regulations, or rules. Ignorance of the applicable laws, regulations, or rules is not a defense to any administrative action.

2. Failure to comply with any or all policies, criteria, or procedures of the Medical Assistance Program or the applicable program of the Medical Assistance Program in which the provider, provider-in-fact, agent of the provider, billing agent, or affiliate of the provider is participating.

a. Policies, criteria, and procedures are contained in program manuals, training manuals, remittance advice,

provider updates or bulletins issued by or on behalf of the secretary or director of BHSF.

b. Policies, criteria, and procedures can be waived, amended, clarified, repealed, or otherwise changed, either generally or in specific cases, only by the secretary, undersecretary, deputy secretary, or director of BHSF.

c. Such waivers, amendments, clarifications, repeals, or other changes must be in writing and state that it is a waiver, amendment, clarification, or change in order to be effective.

d. Notice of the policies, criteria, and procedures of the Medical Assistance Program and its programs are provided to providers upon enrollment and receipt of a provider number. It is the duty of the provider to obtain the policies, criteria, and procedures which are in effect while they are enrolled in the Medical Assistance Program.

e. Waivers, amendments, clarifications, repeals, or other changes may be mailed to the provider at the address given to BHSF or the fiscal intermediary by the provider for the express purpose of receiving such notifications. Waivers, amendments, clarifications, repeals, or other changes may also be posted on a BHSF or the fiscal intermediary's website for the express purpose of the provider receiving such notifications.

i. It is the duty of the provider to provide the above address and make arrangements to receive these mailings through that address. This includes the duty to inform BHSF or the fiscal intermediary of any changes in the above address prior to actual change of address. It is also the duty of the provider to check the BHSF or the fiscal intermediary's website to obtain policies, criteria, or procedures.

ii. Mailing to the provider's last known address or the posting to a BHSF or the fiscal intermediary's website of a manual, new manual pages, provider updates, bulletins, memorandums, or remittance advice creates a reputable presumption that the provider received it. The burden of proving lack of notice of policy, criteria, or procedure or waivers, amendments, clarifications, repeals, or other changes in same is on the party asserting it.

iii. Providers and providers-in-fact are presumed to know the applicable policies, criteria, and procedures and any or all waivers, amendments, clarifications, repeals, or other changes to the applicable rules, policies, criteria, and procedures which have been mailed to the address provided by the provider or posted to a BHSF or the fiscal intermediary's website for the purpose of receiving notice of same.

iv. Ignorance of an applicable policy, criteria, or procedure or any and all waivers, amendments, clarifications, repeals, or other changes to applicable policies, criteria, and procedures is not a defense to an administrative action brought against a provider or provider-in-fact.

f. Providers and providers-in-fact are required and have an affirmative duty to fully inform all of their agents and affiliates, who are performing any function connected to the provider's activities related to the Medicaid Program, of the applicable policies, criteria, and procedures and any waivers, amendments, clarifications, repeals, or other changes in applicable policies, criteria, or procedures.

3. Failure to comply with one or more of the terms or conditions contained in the provider's provider agreement or any and all forms signed by or on behalf of the provider setting forth the terms and conditions applicable to participation in the Medical Assistance Program or one or more of its programs.

a. The terms or conditions of a provider agreement or those contained in the signed forms, unless specifically provided for by law or regulation or rule, can only be waived, changed, or amended through mutual written agreement between the provider and the secretary, undersecretary, deputy secretary or the director of BHSF. Those conditions or terms that are established by law or regulation or rule may not be waived, altered, amended, or otherwise changed except through legislation or rulemaking.

b. A waiver, change, or amendment to a term or condition of a provider agreement and any signed forms must be reduced to writing and be signed by the provider and the secretary, undersecretary, deputy secretary or the director of BHSF in order to be effective.

c. Such mutual agreements cannot waive, change, or amend the law, regulations, rules, policies, criteria, or procedures.

d. The provider and provider-in-fact are presumed to know the terms and conditions in their provider agreement and any signed forms related thereto, and any changes to their provider agreement or the signed forms related thereto.

e. The provider and provider-in-fact are required and have an affirmative duty to fully inform all their agents or affiliates, who are performing any function connected to the provider's activities related to the Medicaid Program, of the terms and conditions contained in the provider agreement and the signed forms related thereto and any change made to them. Ignorance of the terms and conditions in the provider agreement or signed forms or any changes to them is not a defense.

i. The department, BHSF, or the fiscal intermediary may, from time to time, provide training sessions and consultation on the law, regulations, rules, policies, criteria, and procedures applicable to the Medical Assistance Program and its programs. These training sessions and consultations are intended to assist the provider, provider-in-fact, agents of providers, billing agents, and affiliates. Information presented during these training sessions and consultations do not necessarily constitute the official stands of the department and BHSF in regard to the law, regulations, and rules, policies, or procedures unless reduced to writing in compliance with this Subpart.

f - g. Repealed.

4. Making a false, fictitious, untrue, misleading statement or concealment of information during the application process or not fully disclosing all information required or requested on the application forms for the Medical Assistance Program, provider number, enrollment paperwork, or any other forms required by the department, BHSF, or its fiscal intermediary that is related to enrollment in the Medical Assistance Program or one of its programs, or failing to disclose any other information which is required under this regulation, or other departmental regulations, rules, policies, criteria, or procedures. This includes the information required under R.S.46:437.11-437.14. Failure to

pay any fees or post security related to enrollment is also a violation of this Section.

a. The provider and provider-in-fact have an affirmative duty to inform BHSF in writing through provider enrollment of any and all changes in ownership, control, or managing employee of a provider and fully and completely disclose any and all administrative sanctions, withholding of payments, criminal charges, or convictions, guilty pleas, or no contest pleas, civil judgments, civil fines, or penalties imposed on the provider, provider-in-fact, agent of the provider, billing agent, or affiliates of the provider in this or any other state or territory of the United States.

i. Failure to do so within 10 working days of when the provider or provider-in-fact knew or should have known of such a change or information is a violation of this provision.

ii. If it is determined that a failure to disclose was willful or fraudulent, the provider's enrollment can be voided back to the date of the willful misrepresentation or concealment or fraudulent disclosure.

b. - d. Repealed.

5. Not being properly licensed, certified, or otherwise qualified to provide for the particular goods, services, or supplies provided or billed for or such license, certificate, or other qualification required or necessary in order to provide a good, service, or supply has not been renewed or has been revoked, suspended, or otherwise terminated is a violation of this provision. This includes, but is not limited to, professional licenses, business licenses, paraprofessional certificates, and licenses or other similar licenses or certificates required by federal, state, or local governmental agencies, as well as, professional or paraprofessional organizations or governing bodies which are required by the Medical Assistance Program. Failure to pay required fees related to licensure or certification is also a violation of this provision.

a - a.ii. Repealed.

6. Having engaged in conduct or performing an act in violation of official sanction which has been applied by a licensing authority, professional peer group, or peer review board or organization, or continuing such conduct following notification by the licensing or reviewing body that said conduct should cease.

7. Having been excluded or suspended from participation in Medicare. It is also a violation of this provision for a provider to employ, contract with, or otherwise affiliate with any person who has been excluded or suspended from Medicare during the period of exclusion or suspension.

a. The provider and provider-in-fact after they knew, or should have known of same, have an affirmative duty to:

i. inform BHSF in writing of any such exclusions or suspensions on the part of the provider, provider-in-fact, their agents or their affiliates;

ii. not hire, contract with, or affiliate with any person or entity who has been excluded or suspended from Medicare; and

iii. terminate any and all ownership, employment and contractual relationships with any person or entity that has been excluded or suspended from Medicare.

b. Failure to do so on the part of the provider or provider-in-fact within 10 working days of when the provider or provider-in-fact knew or should have known of any violation of this provision by the provider, provider-in-fact, their agents, or affiliates is a violation of §4147.A.4.

8. Having been excluded, suspended, or otherwise terminated from participation in Medicaid or other publicly funded health care or insurance programs of this state or any other state or territory of the United States. It is also a violation of this Section for a provider to employ, contract with, or otherwise affiliate with any person who has been excluded, suspended, or otherwise terminated from participation in Medicaid or other publicly funded health care or health insurance programs of this state or another state or territory of the United States. It is also a violation of this provision for a provider to employ, contract with, or otherwise affiliate with any person who has been excluded from Medicaid or other publicly funded health care or health insurance programs of this state or any other state or territory of the United States during the period of exclusion or suspension.

a. The provider and provider-in-fact after they knew or should have known of same have an affirmative duty to:

i. …

ii. not hire, contract with, or affiliate with any person or entity who has been excluded or suspended from any Medicaid or other publicly funded health care or health insurance programs; and

iii. terminate any and all ownership, employment and contractual relationships with any person or entity that has been excluded or suspended from any Medicaid or other publicly funded health care or health insurance programs.

b. Failure to do so on the part of the provider or provider-in-fact within 10 working days of when the provider or provider-in-fact knew or should have known of any violation of this provision by the provider, provider-in-fact, their agents, or affiliates is a violation of §4147.A.4..

c. Repealed.

9. Having been convicted of, pled guilty, or pled no contest to a crime, including attempts or conspiracy to commit a crime, in federal court, any state court, or court in any United States territory related to providing goods, services, or supplies or billing for goods, services, or supplies under Medicare, Medicaid, or any other program involving the expenditure of public funds. It is also a violation for a provider to employ, contract with, or otherwise affiliate with any person who has been convicted of, pled guilty, or pled no contest to a crime, including attempts to or conspiracy to commit a crime, in federal court, any state court, or court in any United States territory related to providing goods, services, or supplies or billing for goods, services, or supplies under Medicare, Medicaid, or any other program involving the expenditure of public funds.

a. The provider and provider-in-fact after they knew or should have known of same have an affirmative duty to:

i. inform BHSF in writing of any such convictions, guilty pleas, or no contest plea to the above felony criminal conduct on the part of the provider, provider-in-fact, their agents or their affiliates;

ii. not hire, contract with, or affiliate with any person or entity who has been convicted, pled guilty to, or pled no contest to the above felony criminal conduct; and

iii. terminate any and all ownership, employment and contractual relationships with any person or entity that has been convicted, pled guilty to, or pled no contest to the above felony criminal conduct.

b. Failure to do so on the part of the provider or provider-in-fact within 10 working days of when the provider or provider-in-fact knew or should have known of any violation of this provision by the provider, provider-in-fact, their agents or affiliates is a violation of §4147.A.4.

c. If five years have passed since the completion of the sentence and no other criminal misconduct by that person has occurred during that five year period, this provision is not violated. Criminal conduct which has been pardoned does not violate this provision.

10. Having been convicted of, pled guilty, or pled no contest in federal court, any state court, or court in any United States territory to criminal conduct involving the negligent practice of medicine or any other activity or skill related to an activity or skill performed by or billed by that person or entity under the Medical Assistance Program or one of its programs or which caused death or serious bodily, emotional, or mental injury to an individual under their care. It is also a violation of this provision for a provider to employ, contract with, or otherwise affiliate with any person who has been convicted of, pled guilty, or pled no contest in federal court, any state court, or court in any United States territory to criminal conduct involving the negligent practice of medicine or any other activity or skill related to an activity or skill performed by or billed by that person or entity under the Medical Assistance Program or one of its programs or which caused death or serious bodily, emotional, or mental injury to an individual under their care.

a. The provider and provider-in-fact after they knew or should have known of same have an affirmative duty to:

i. inform BHSF in writing of any such convictions, guilty plea, or no contest plea to the above criminal conduct on the part of the provider, provider-in-fact, their agents or affiliates;

ii. not hire, contract with, or affiliate with any person or entity who has been convicted, pled guilty to, or pled no contest to the above criminal conduct; and

iii. terminate any and all ownership, employment and contractual relationships with any person or entity that has been convicted, pled guilty to, or pled no contest to the above criminal conduct.

b. Failure to do so on the part of the provider or provider-in-fact within 10 working days of when the provider or provider-in-fact knew or should have known of any violation of this provision by the provider, provider-in-fact, their agents or affiliates is a violation of §4147.A.4.

c. If five years have passed since the completion of the sentence and no other criminal misconduct by that person has occurred during that five-year period, this provision is not violated. Criminal conduct which has been pardoned does not violate this provision.

11. Having been convicted of, pled guilty to, or pled no contest to, in any federal court, state court, or court in any territory of the United States to any of the following criminal conduct, attempt to commit or conspire to commit any of the following crimes:

a. bribery or extortion;

i. - iii. Repealed.

b. sale, distribution, or importation of a substance or item that is prohibited by law;

c. tax evasion or fraud;

d. money laundering;

e. securities or exchange fraud;

f. wire or mail fraud;

g. violence against a person;

h. act against the aged, juveniles or infirmed;

i. any crime involving public funds; or

j. other similar felony criminal conduct.

i. The provider and provider-in-fact after they knew or should have known of same have an affirmative duty to:

(a). inform BHSF in writing of any such criminal charges, convictions, or pleas on the part of the provider, provider-in-fact, their agents, or their affiliates;

(b). not hire, contract with, or affiliate with any person or entity who has engaged in any such criminal misconduct; and

(c). terminate any and all ownership, employment and contractual relationships with any person or entity that has engaged in any such criminal misconduct.

ii. Failure to do so on the part of the provider or provider-in-fact within 10 working days of when the provider or provider-in-fact knew or should have known of any violation of this provision by the provider, provider-in-fact, their agents or their affiliates is a violation of §4147.A.4.

iii. If five years have passed since the completion of the sentence and no other criminal misconduct by that person has occurred during that five-year period, this provision is not violated. Criminal conduct that has been pardoned does not violate this provision.

12. Being found in violation of or entering into a settlement agreement under this state's Medical Assistance Program Integrity Law, the Federal False Claims Act, Federal Civil Monetary Penalties Act, or any other similar civil statutes in this state, in any other state, United States or United States territory.

a. Relating to violations of this provision, the provider and provider-in-fact after they knew or should have known have an affirmative duty to:

i. inform BHSF in writing of any violations of this provision on the part of the provider, provider-in-fact, their agents or their affiliates;

ii. not hire, contract with, or affiliate with any person or entity who has violated this provision; and

iii. terminate any and all ownership, employment or contractual relationships with any person or entity that has violated this provision.

b. Failure to do so on the part of the provider or provider-in-fact within 10 working days of when the provider or provider-in-fact knew or should have known of any violation of this provision by the provider, provider-in-fact, their agents or affiliates is a violation of §4147.A.4.

c. If a False Claims Act action or other similar civil action is brought by a Qui-Tam plaintiff, no violation of this provision has occurred until the defendant has been found liable in the action.

d. If five years have passed from the time a person is found liable or entered a settlement agreement under the False Claims Act or other similar civil statute and the

conditions of the judgment or settlement have been satisfactorily fulfilled, no violation has occurred under this provision.

13. Failure to correct the deficiencies or problem areas listed in a notice of sanction, or failure to meet the provisions of a corrective action plan or failure to correct deficiencies in delivery of goods, services, or supplies after receiving written notice to do so from the secretary, director of BHSF, or director of Program Integrity.

a. - c. Repealed.

14. Having presented, causing to be presented, attempting to present, or conspiring to present false, fraudulent, fictitious, or misleading claims or billings for payment or reimbursement to the Medical Assistance Program through BHSF or its authorized fiscal intermediary for goods, services, or supplies, or in documents related to a cost report or other similar submission.

a. - i.iii. Repealed.

15. Engaging in the practice of charging or accepting payments, in whole or in part, from one or more recipients for goods, services, or supplies for which the provider has made or will make a claim for payment to the Medicaid Program, unless this prohibition has been specifically excluded within the program under which the claim was submitted or will be made, or the payment by the recipient is an authorized copayment or is otherwise specifically authorized by law or regulation. Having engaged in practices prohibited by R.S.46:438.2 or the federal anti-kickback or anti-referral statute is also a violation of this provision.

a. - d. Repealed.

16. Having rebated or accepted a fee or a portion of a fee or anything of value for a Medicaid recipient referral, unless this prohibition has been specifically excluded within the program or is otherwise authorized by statute or regulation, rule, policy, criteria, or procedure of the department through BHSF. Having engaged in practices prohibited by R.S. 46:438.2 or the federal anti-kickback or anti-referral statute is also a violation of this provision.

17. Paying to another a fee in cash or kind for the purpose of obtaining recipient lists or recipients names, unless this prohibition has been specifically excluded within the program or is otherwise authorized by statute or regulation, rule, policy, criteria or procedure of the department through BHSF. Using or possessing any recipient list or information, which was obtained through unauthorized means, or using such in an unauthorized manner. Having engaged in practices prohibited by R.S. 46:438.2 or R.S. 46:438.4 or the federal anti-kickback or anti-referral statute.

18. Failure to repay or make arrangements to repay an identified overpayment or otherwise erroneous payment within 10 working days after the provider or provider-in-fact receives written notice of same. Failure to pay any and all administrative or court ordered restitution, civil money damages, criminal or civil fines, monetary penalties or costs or expenses is also a violation of this provision. Failure to pay any assessed provider fee or payment is also a violation of this provision.

19. Failure to keep or make available for inspection, audit, or copying records related to the Medicaid Program or one or more of its programs for which the provider has been enrolled or issued a provider number or has failed to allow BHSF or its fiscal intermediary or any other duly authorized governmental entity an opportunity to inspect, audit, or copy those records. Failure to keep records required by Medicaid or one of its programs until payment review has been conducted is also a violation of this provision.

20. Failure to furnish or arrange to furnish information or documents to BHSF within five working days after receiving a written request to provide that information to BHSF or its fiscal intermediary.

21. Failure to cooperate with BHSF, its fiscal intermediary or the investigating officer during the post-payment or prepayment process, investigative process, informal hearing or the administrative appeal process or any other legal process or making, or caused to be made, a false or misleading statement of a material fact in connection with the post-payment or prepayment process, corrective action, investigation process, informal hearing or the administrative appeals process or any other legal process. The exercising of a constitutional or statutory right is not a failure to cooperate. Requests for scheduling changes or asking questions are not grounds for failure to cooperate.

22. Making, or causing to be made, a false, fictitious or misleading statement or making, or caused to be made, a false, fictitious or misleading statement of a fact in connection with the administration of the Medical Assistance Program which the person knew or should have known was false, fictitious or misleading. This includes, but is not limited to, the following:

a. claiming costs for non-covered non-chargeable services, supplies, or goods disguised as covered items;

b. billing for services, supplies, or goods which are not rendered to person(s) who are eligible to receive the services, supplies, or goods;

c. misrepresenting dates and descriptions and the identity of the person(s) who rendered the services, supplies, or goods;

d. duplicate billing that are abusive, willful, or fraudulent;

e. upcoding of services, supplies, or goods provided;

f. misrepresenting a recipient's need or eligibility to receive services, goods, or supplies ;

g. improperly unbundling goods, services, or supplies for billing purposes;

h. misrepresenting the quality or quantity of services, goods, or supplies;

i. submitting claims for payment for goods, services, and supplies provided to non-recipients if the provider knew or should have known that the individual was not eligible to receive the good, supply, or service at the time the good, service, or supply was provided or billed;

j. furnishing or causing to be furnished goods, services, or supplies to a recipient which:

i. are in excess of the recipient's needs;

ii. were or could be harmful to the recipient;

iii. serve no real medical purpose;

iv. are of grossly inadequate or inferior quality;

v. were furnished by an individual who was not qualified under the applicable Medicaid Program to provide the good, service, or supply;

vi. the good, service, or supply was not furnished under the required programmatic authorization; or

vii. the goods, services, or supplies provided were not provided in compliance with the appropriate licensing or certification board's regulations, rules, policies, or procedures governing the conduct of the person who provided the goods, services, or supplies;

k. providing goods, services, or supplies in a manner or form that is not within the normal scope and range of the standards used within the applicable profession; or

l. billing for goods, services, or supplies in a manner inconsistent with the standards established in relevant billing codes or practices.

23. In the case of a managed care provider or provider operating under a voucher, notwithstanding any contractual agreements to the contrary, failure to provide all medically necessary goods, services, or supplies of which the recipient is in need of and entitled to.

24. Submitting bills or claims for payment or reimbursement to the Medicaid Program through BHSF or its fiscal intermediary on behalf of a person or entity which is serving out a period of suspension or exclusion from participation in the Medical Assistance Program or one of its programs, Medicare, publicly funded health care, or publicly funded health insurance program in any other state or territory of the United States.

25. Engaging in a systematic billing practice which is abusive or fraudulent and which maximizes the costs to the Medicaid Program after written notice to cease such billing practice(s).

a. - l. Repealed.

26. Failure to meet the terms of an agreement to repay or settlement agreement entered into under this state's Medical Assistance Program Integrity Law or this regulation.

27. - 30.c.iii. Repealed.

AUTHORITY NOTE: Promulgated in accordance with R.S. 36:254, 46:437.4 and 46:437.1-46:440.3 (Medical Assistance Program Integrity Law).

HISTORICAL NOTE: Promulgated by the Department of Health and Hospitals, Office of the Secretary, Bureau of Health Services Financing, LR 29:590 (April 2003), amended by the Department of Health and Hospitals, Bureau of Health Services Financing, LR 38:

§4149. Scope of a Violation

A. Violations may be imputed in the following manner.

1. - 3. …

4. The provider and provider-in-fact are responsible for the conduct of any and all officers, employees, contractors, or agents of the provider. The conduct of these persons or entities may be imputed to the provider or provider-in-fact.

5. - 10. …

11. A recoupment, fine, recovery or penalty, which is owed to the department by a provider or provider-in-fact, can be imputed to a group and/or entity to which the provider or provider-in-fact is linked.

B. Attributing, imputing, extension or imposing under this provision shall be done on a case-by-case basis with written reasons for same.

AUTHORITY NOTE: Promulgated in accordance with R.S. 36:254, 46:437.4 and 46:437.1-46:440.3 (Medical Assistance Program Integrity Law).

HISTORICAL NOTE: Promulgated by the Department of Health and Hospitals, Office of the Secretary, Bureau of Health Services Financing, LR 29:596 (April 2003), amended by the Department of Health and Hospitals, Bureau of Health Services Financing, LR 38:

§4151. Types of Violation

Repealed.

AUTHORITY NOTE: Promulgated in accordance with R.S. 36:254, 46:437.4 and 46:437.1-46:440.3 (Medical Assistance Program Integrity Law).

HISTORICAL NOTE: Promulgated by the Department of Health and Hospitals, Office of the Secretary, Bureau of Health Services Financing, LR 29:597 (April 2003), repealed by the Department of Health and Hospitals, Bureau of Health Services Financing, LR 38:

§4153. Elements

Repealed.

AUTHORITY NOTE: Promulgated in accordance with R.S. 36:254, 46:437.4 and 46:437.1-46:440.3 (Medical Assistance Program Integrity Law).

HISTORICAL NOTE: Promulgated by the Department of Health and Hospitals, Office of the Secretary, Bureau of Health Services Financing, LR 29:597 (April 2003), repealed by the Department of Health and Hospitals, Bureau of Health Services Financing, LR 38:

Subchapter E. Administrative Sanctions, Procedures and Processes

§4161. Sanctions for Prohibited Conduct

A. Any or all of the following sanctions may be imposed for any one or more of the above listed kinds of prohibited conduct, except as provided for in this Chapter 41:

1. issue a warning to a provider or provider-in-fact or other person through written notice;

2. …

3. require that the provider or provider-in-fact receive prior authorization for any or all goods, services or supplies under the Medicaid Program or one or more of its programs;

4. …

5. require a provider or provider-in-fact to post a bond or other security or increase the bond or other security already posted as a condition of continued enrollment in the Medicaid Program or one or more of its programs;

6. require that a provider terminate its association with a provider-in-fact, agent of the provider, or affiliate as a condition of continued enrollment in the Medicaid Program or one or more of its programs;

7. prohibit a provider from associating, employing or contracting with a specific person or entity as a condition of continued participation in the Medicaid Program or one or more of its programs;

8. - 13. …

14. exclusion from the Medicaid Program or one or more of its programs;

15. suspension from the Medicaid Program or one or more of its programs pending the resolution of the department's administrative appeals process;

16. require the forfeiture of a bond or other security;

17. impose an arrangement to repay;

18. impose monetary penalties not to exceed $10,000; or

19. impose withholding of payments.

20. Repealed.

AUTHORITY NOTE: Promulgated in accordance with R.S. 36:254, 46:437.4 and 46:437.1-46:440.3 (Medical Assistance Program Integrity Law).

HISTORICAL NOTE: Promulgated by the Department of Health and Hospitals, Office of the Secretary, Bureau of Health Services Financing, LR 29:598 (April 2003), amended by the Department of Health and Hospitals, Bureau of Health Services Financing, LR 38:

§4163. Scope of Sanctions

A. Sanction(s) imposed can be extended to other persons or entities and to other provider numbers held, or obtained by the provider in the following manner.

1. …

2. Sanction(s) imposed on an agent of the provider or affiliate of the provider may be imposed on the provider or provider-in-fact if it can be shown that the provider or provider-in-fact knew or should have known about the violation(s) and failed to report the violation(s) to BHSF in a timely manner.

3. - 4. …

5. Sanction(s) imposed on a person remains in effect unless and until its terms and conditions are fully satisfied. The terms and conditions of the sanction(s) remain in effect in the event of the sale or transfer of ownership of the sanctioned provider.

a. The entity or person who obtains an interest in, merges with or otherwise consolidates with a sanctioned provider assumes liability and responsibility for the sanctions imposed on the purchased provider including, but not limited to, all recoupments or recovery of funds or arrangements to repay that the entity or person knew or should have known about.

b. …

c. Repealed.

B. Exclusion from participation in the Medicaid Program precludes any such person from submitting claims for payment, either personally or through claims submitted by any other person or entity, for any goods, services, or supplies provided by an excluded person or entity. Any payments, made to a person or entity which are prohibited by this provision, shall be immediately repaid to the Medical Assistance Program through BHSF by the person or entity which received the payments.

C. No provider shall submit claims for payment to the department or its fiscal intermediary for any goods, services, or supplies provided by a person or entity within that provider who has been excluded from the Medical Assistance Program or one or more of its programs for goods, services, or supplies provided by the excluded person or entity under the programs which it has been excluded from. Any payments, made to a person or entity, which are prohibited by this provision, shall be immediately repaid to the Medical Assistance Program through BHSF by the person or entity which received the payments.

D. When these provisions are violated, the person or entity which committed the violations may be sanctioned using any and all of the sanctions provided for in this Chapter.

E. - F. …

AUTHORITY NOTE: Promulgated in accordance with R.S. 36:254, 46:437.4 and 46:437.1-46:440.3 (Medical Assistance Program Integrity Law).

HISTORICAL NOTE: Promulgated by the Department of Health and Hospitals, Office of the Secretary, Bureau of Health Services Financing, LR 29:598 (April 2003), amended by the Department of Health and Hospitals, Bureau of Health Services Financing, LR 38:

§4165. Imposition of Sanction(s)

A. The decision as to the sanction(s) to be imposed shall be at the discretion of the director of BHSF or his/her designee and the director of Program Integrity except as provided for in this provision, unless the sanction is mandatory. In order to impose a sanction, the director of BHSF or his/her designee and the director of Program Integrity must concur. One or more sanctions may be imposed for a single violation. The imposition of one sanction does not preclude the imposition of another sanction for the same or different violations.

B. At the discretion of the director of BHSF or his/her designee and the director of Program Integrity, each occurrence of misconduct may be considered a violation or multiple occurrences of misconduct may be considered a single violation or any combination thereof.

C. - C.10. …

D. - E. Repealed.

AUTHORITY NOTE: Promulgated in accordance with R.S. 36:254, 46:437.4 and 46:437.1-46:440.3 (Medical Assistance Program Integrity Law)

HISTORICAL NOTE: Promulgated by the Department of Health and Hospitals, Office of the Secretary, Bureau of Health Services Financing, LR 29:599 (April 2003), amended by the Department of Health and Hospitals, Bureau of Health Services Financing, LR 38:

§4167. Mandatory Sanctions

A. Mandatory Exclusion from the Medical Assistance Program. Notwithstanding any other provision to the contrary, the director of BHSF and the director of Program Integrity have no discretion and shall exclude the provider, provider-in-fact or other person from the Medical Assistance Program if the violation involves one or more of the following:

1. …

2. has been excluded from Medicare; or

3. …

B. In these situations (Paragraphs A.1-3 above), the exclusion from the Medical Assistance Program is automatic and can be longer than, but not shorter in time than, the sentence imposed in criminal court, the exclusion from Medicaid or Medicare or time provided to make payment.

1. - 2. …

a. If the conviction is overturned, plea set aside, or exclusion or judgment is reversed on appeal, the mandatory exclusion from the Medical Assistance Program shall be removed.

b. - c. …

C. Repealed.

AUTHORITY NOTE: Promulgated in accordance with R.S. 36:254, 46:437.4 and 46:437.1-46:440.3 (Medical Assistance Program Integrity Law).

HISTORICAL NOTE: Promulgated by the Department of Health and Hospitals, Office of the Secretary, Bureau of Health Services Financing, LR 29:599 (April 2003), amended by the Department of Health and Hospitals, Bureau of Health Services Financing, LR 38:

§4169. Effective Date of a Sanction

A. All sanctions, except exclusion, are effective upon the issuing of the notice of the results of the informal hearing. The filing of a timely and adequate notice of administrative

appeal does not suspend the imposition of a sanction(s), except that of exclusion. In the case of the imposition of exclusion from the Medicaid Program or one or more of its programs, the filing of a timely and adequate notice of appeal suspends the exclusion. A sanction becomes a final administrative adjudication if no administrative appeal has been filed, and the time for filing an administrative appeal has run. Or in the case of a timely filed notice of administrative appeal, a sanction(s) becomes a final administrative adjudication when the order on appeal has been entered by the secretary. In order for an appeal to be filed timely it must be sent to the Division of Administrative Law within 30 days from the date of receipt of the letter informing the person of the results of the informal discussion.

AUTHORITY NOTE: Promulgated in accordance with R.S. 36:254, 46:437.4 and 46:437.1-46:440.3 (Medical Assistance Program Integrity Law).

HISTORICAL NOTE: Promulgated by the Department of Health and Hospitals, Office of the Secretary, Bureau of Health Services Financing, LR 29:600 (April 2003), amended by the Department of Health and Hospitals, Bureau of Health Services Financing, LR 38:

Subchapter F. Withholding

§4177. Withholding of Payments

A. The director of BHSF or his/her designee and the director of Program Integrity may initiate the withholding of a portion of or all payments or reimbursements to be made to a provider for the purpose of protecting the interest and fiscal integrity of the Medicaid Program if, during the course of claims review, the director of BHSF or his/her designee and the director of Program Integrity have a reasonable expectation:

1. - 4. …

B. Payments to the provider may be withheld if the director of BHSF or his/her designee and the director of Program Integrity has been informed in writing by a prosecuting authority that a provider or provider-in-fact:

1. has been formally charged or indicted for crimes; or

a. - c. Repealed.

2. is being investigated for potential criminal activities which relate to the Medicaid Program or one or more of its programs or Medicare.

a. - b. Repealed.

C. If the director of BHSF or his/her designee and the director of Program Integrity has been informed in writing by any governmental agency or authorized agent of a governmental agency that a provider or a provider-in-fact is being investigated by that governmental agency or its authorized agent for billing practices related to any government funded health care program, payment may be withheld.

D. Withholding of payments may occur without first notifying the provider.

E. Notice of Withholding

1. The provider shall be sent written notice of the withholding of payments within five working days of the actual withholding of the first check that is the subject of the withholding. The notice shall set forth in general terms the reason(s) for the action, but need not disclose any specific information concerning any ongoing investigations nor the source of the allegations. The notice must:

a. state that payments are being withheld;

b. state that the withholding is for a temporary period and cite the circumstances under which the withholding will be terminated;

c. specify to which type of Medicaid claims withholding is effective;

d. inform the provider of its right to submit written documentation for consideration and to whom to submit that documentation; and

e. inform the provider of its right to an administrative appeal.

2. Failure to provide timely notice of the withholding to the provider or provider-in-fact may be grounds for dismissing or overturning the withholding.

F. Duration of Withholding

1. All withholding of payment actions under this Chapter will be temporary and will not continue after:

a. the director of BHSF or his/her designee and the director of Program Integrity has determined that insufficient information exists to warrant the withholding of payments;

b. recoupment or recovery of overpayments has been imposed on the provider;

c. the provider or provider-in-fact has posted a bond or other security deemed adequate to cover all past and future projected overpayments; and

d. the notice of the results of the informal hearing.

2. In no case shall withholding remain in effect past the issuance of the notice of the results of the informal hearing, unless the withholding is based on written notification by an outside agency that an active and ongoing criminal investigation is being conducted or that formal criminal charges have been brought. In that case, the withholding may continue for as long as the criminal investigation is active and ongoing or the criminal charges are still pending, unless adequate bond or other security has been posted with BHSF.

G. Amount of the Withholding

1. If the withholding of payment results from projected overpayments, then when determining the amount to be withheld, the ability of the provider to continue operations and the needs of the recipient serviced by the provider shall be taken into consideration by the director of BHSF and the director of Program Integrity. In the event that a recipient cannot receive needed goods, services or supplies from another source, arrangements shall be made to assure that the recipient can receive goods, supplies, and services. The burden is on the provider to demonstrate that absent that provider's ability to provide goods, supplies, or services to that recipient, the recipient could not receive needed goods, supplies, or services. Such showing must be made at the informal hearing.

2. The amount of the withholding shall be determined by the director of BHSF or his/her designee and the director of Program Integrity. The provider should be notified of the amount withheld every 90 days from the date of the issuing of the Notice of Withholding until the withholding is terminated or the results of the informal hearing are issued, whichever comes first.

AUTHORITY NOTE: Promulgated in accordance with R.S. 36:254, 46:437.4 and 46:437.1-46:440.3 (Medical Assistance Program Integrity Law).

HISTORICAL NOTE: Promulgated by the Department of Health and Hospitals, Office of the Secretary, Bureau of Health Services Financing, LR 29:600 (April 2003), amended by the

Department of Health and Hospitals, Bureau of Health Services Financing, LR 38:

Subchapter G. Suspension of Medicaid Payments Pending Investigation of Credible Allegations of Fraud

§4181. General Provisions

A. Basis for Suspension

1. The director of BHSF and the director of Program Integrity must suspend all Medicaid payments to a provider after it determines there is a credible allegation of fraud for which an investigation is pending under the Medicaid Program against a provider unless it has good cause to not suspend payments or to suspend payment only in part.

2. The director of BHSF and the director of Program Integrity may suspend payments without first notifying the provider of its intention to suspend such payments.

3. A provider is entitled to an administrative review of the suspension of payment.

B. Notice of Suspension

1. The director of BHSF and the director of Program Integrity must send notice of its suspension of Medicaid payments within the following timeframes:

a. five days of taking such action unless requested in writing by a law enforcement agency to temporarily withhold such notice; and

b. 30 days if requested by law enforcement in writing to delay sending such notice, which request for delay may be renewed in writing up to twice and in no event may exceed 90 days.

2. The notice must include or address all of the following:

a. Medicaid payments are being suspended in accordance with 42 CFR 455.23;

b. set forth the general allegations as to the nature of the suspension action, but need not disclose any specific information concerning an ongoing investigation;

c. state that the suspension is for a temporary period, and cite the circumstances under which the suspension will be terminated;

d. specify, when applicable, to which type(s) of Medicaid claims or business units of a provider suspension is effective;

e. inform the provider of the right to submit written evidence for consideration by the director of BHSF and the director of Program Integrity; and

f. inform the provider of their right to a administrative appeal.

C. Duration of Suspension

1. All suspension of payment actions under this Section will be temporary and will not continue after either of the following:

a. legal proceedings related to the provider's alleged fraud are completed; or

b. the director of BHSF and the director of Program Integrity or the prosecuting authorities determine that there is insufficient evidence of fraud by the provider.

D. Good Cause Not to Suspend Payments. The director of BHSF and the director of Program Integrity may find that good cause exists not to suspend payments, or not to continue a payment suspension previously imposed, to a provider against which there is an investigation of a credible allegation of fraud if any of the following are applicable.

1. Law enforcement officials have specifically requested that a payment suspension not be imposed because such a payment suspension may compromise or jeopardize an investigation.

2. Other available remedies implemented by BHSF or Program Integrity more effectively or quickly protect Medicaid funds.

3. The director of BHSF and the director of Program Integrity determine, based upon the submission of written evidence by the provider that is the subject of the payment suspension, that the suspension should be removed.

4. Recipient access to items or services would be jeopardized by a payment suspension because of either of the following:

a. a provider is the sole community physician or the sole source of essential specialized services in a community; or

b. a provider serves a large number of recipients within a HRSA-designated medically underserved area.

5. Law enforcement declines to certify that a matter continues to be under investigation.

6. The director of BHSF and the director of Program Integrity determine that payment suspension is not in the best interest of the Medicaid program.

E. Good Cause to Suspend Payment Only in Part. The director of BHSF and the director of Program Integrity may find that good cause exists to suspend payments in part, or to convert a payment suspension previously imposed in whole to one only in part, to a provider against which there is an investigation of a credible allegation of fraud if any of the following are applicable.

1. Recipient access to items or services would be jeopardized by a payment suspension because of either of the following:

a. a provider is the sole community physician or the sole source of essential specialized services in a community; or

b. a provider serves a large number of recipients within a HRSA-designated medically underserved area.

2. The director of BHSF and the director of Program Integrity determines, based upon the submission of written evidence by the provider that is the subject of a whole payment suspension, that such suspension should be imposed only in part.

3. The credible allegation of fraud focuses solely and definitively on only a specific type of claim or arises from only a specific business unit of a provider and the director of BHSF and the director of program integrity determine and document in writing that a payment suspension in part would effectively ensure that potentially fraudulent claims were not continuing to be paid.

4. Law enforcement declines to certify that a matter continues to be under investigation.

5. The director of BHSF and the director of Program Integrity determine that payment suspension only in part is in the best interest of the Medicaid Program.

AUTHORITY NOTE: Promulgated in accordance with R.S. 36:254, 46:437.4 and 46:437.1-46:440.3 (Medical Assistance Program Integrity Law).

HISTORICAL NOTE: Promulgated by the Department of Health and Hospitals, Bureau of Health Services Financing, LR 38:

Subchapter H. Arrangements to Repay

Subchapter I. Corrective Actions

§4195. Corrective Actions Plans

A. …

1. Corrective Action Plan-Notification

a. The director of BHSF and the director of Program Integrity may at any time issue a notice of corrective action to a provider or provider-in-fact, agent of the provider, or affiliate of the provider. The provider, provider-in-fact, agent of the provider, or affiliate of the provider shall comply with the corrective action plan within 10 working days of receipt of the corrective action plan. The purpose of a corrective action plan is to identify potential problem areas and correct them before they become significant discrepancies, deviations or violations. This is an informal process.

i. The provider, provider-in-fact, agent of the provider, or affiliate of the provider must submit their agreement with the corrective action plan in writing, signed by the provider, the provider-in-fact, agent of the provider, or affiliate of the provider.

ii. Repealed.

b. …

2. Corrective Action Plan-Inclusive Criteria. The corrective action plan must be in writing and contain at least the following:

a. …

b. the corrective action(s) that must be taken; and

c. notification of any action required of the provider, provider-in-fact, agent of the provider, billing agent or affiliate of the provider.

d. - e. Repealed.

3. Corrective Action Plans-Restrictions. Corrective actions, which may be included in a corrective action plan, are the following:

a. …

b. require that the provider, provider-in-fact, agent of the provider, or affiliate receive education and training in the law, rules, policies, criteria and procedures related to the Medical Assistance Program, including billing practices or programmatic requirements and practices. Such education or training is at the provider or provider-in-fact's expense;

3.c. - 4. …

5. No right to an informal hearing or administrative appeal can arise from a corrective action plan, unless the corrective action plan violates the provisions of this Chapter.

6. Repealed.

AUTHORITY NOTE: Promulgated in accordance with R.S. 36:254, 46:437.4 and 46:437.1-46:440.3 (Medical Assistance Program Integrity Law).

HISTORICAL NOTE: Promulgated by the Department of Health and Hospitals, Office of the Secretary, Bureau of Health Services Financing, LR 29:601 (April 2003), amended by the Department of Health and Hospitals, Bureau of Health Services Financing, LR 38:

Subchapter J. Informal Hearing Procedures and Processes

§4203. Informal Hearing

A. A provider, provider-in-fact, agent of the provider, billing agent, affiliate of the provider or other person who has received a notice of sanction or notice of withholding of payment shall be provided with an informal hearing if that person makes a written request for an informal hearing within 15 days of receipt of the notice. The request for an informal hearing must be made in writing and sent in accordance with the instruction in the notice. The time and place for the informal hearing will be set out in the notice of setting of the informal hearing.

B. - B.3. …

C. Notice of the Results of the Informal Hearing. Following the informal hearing, BHSF shall inform the provider, provider-in-fact, agent of the provider, billing agent, affiliate of the provider or other person in writing of the results which could range from canceling, modifying, or upholding the any or all of the violations, sanctions or other actions contained in a notice of sanction or notice of withholding of payments and the provider, provider-in-fact, agent of the provider, billing agent, affiliate of the provider or other person's right to an administrative appeal. The notice of the results of the informal hearing must be signed by the director of BHSF or his/her designee and the director of Program Integrity.

1. The provider, provider-in-fact, agent of the provider, billing agent, affiliate of the provider or other person has the right to request an administrative appeal within 30 days of the receipt of the notice of the results of the informal hearing. At any time prior to the issuance of the written results of the informal hearing, the notice of corrective action or notice of administrative sanction or withholding of payment may be modified.

a. – b. …

AUTHORITY NOTE: Promulgated in accordance with R.S. 36:254, 46:437.4 and 46:437.1-46:440.3 (Medical Assistance Program Integrity Law).

HISTORICAL NOTE: Promulgated by the Department of Health and Hospitals, Office of the Secretary, Bureau of Health Services Financing, LR 29:602 (April 2003), amended by the Department of Health and Hospitals, Bureau of Health Services Financing, LR 38:

Subchapter K. Administrative Appeals

§4211. Administrative Appeal

A. The provider, provider-in-fact, agent of the provider, billing agent, or affiliate of the provider may seek an administrative appeal from the notice of the results of an informal hearing if the provider, provider-in-fact, agent of the provider, billing agent, or affiliate of the provider has had one or more appealable sanctions imposed upon him.

B. The notice of administrative appeal must be adequate as to form and lodged with the Division of Administrative Law within 30 days of the receipt of the notice of the results of the informal hearing. The lodging of a timely and adequate request for an administrative appeal does not affect the imposition of a sanction, unless the sanction imposed is exclusion. All sanctions imposed through the notice of the results of the informal hearing are effective upon mailing, emailing, or faxing of the notice of the results of the informal hearing to the provider, provider-in-fact, agent of the provider, billing agent, affiliate of the provider or other person, except exclusion from participation in the Medical Assistance Program or one or more of its programs.

C. In the case of an exclusion from participation, if the director of BHSF and the director of Program Integrity determines that allowing that person to participate in the Medicaid Program during the pendency of the administrative appeal process poses a threat to the programmatic or fiscal integrity of the Medicaid Program or poses a potential threat

to health, welfare or safety of any recipients, then that person may be suspended from participation in the Medicaid Program during the pendency of the administrative appeal. If the exclusion is mandatory, a threat to Medicaid Program or recipients is presumed. This determination shall be made following the informal hearing. If no informal hearing is requested, the determination shall be made after the delay for requesting an informal hearing has run.

D. Failure to lodge a timely and adequate request for an administrative appeal will result in the imposition of any and all sanctions in the notice of the results of the informal hearing.

AUTHORITY NOTE: Promulgated in accordance with R.S. 36:254, 46:437.4 and 46:437.1-46:440.3 (Medical Assistance Program Integrity Law).

HISTORICAL NOTE: Promulgated by the Department of Health and Hospitals, Office of the Secretary, Bureau of Health Services Financing, LR 29:603 (April 2003), amended by the Department of Health and Hospitals, Bureau of Health Services Financing, LR 38:

§4213. Right to Administrative Appeal and Review

A. Only the imposing of one or more sanctions can be appealed to the Division of Administrative Law.

1. - 2. …

B. The following actions are not sanctions, even if listed as such in the notice of sanction or notice of the results of the informal hearing, and are not subject to appeal or review by the Division of Administrative Law:

1. - 5. …

6. conducting prepayment review;

7. place the provider's claims on manual review status before payment is made;

8. require that the provider or provider-in-fact receive prior authorization for any or all goods, services, or supplies under the Medicaid Program or one or more of its programs;

9. - 12. …

AUTHORITY NOTE: Promulgated in accordance with R.S. 36:254, 46:437.4 and 46:437.1-46:440.3 (Medical Assistance Program Integrity Law).

HISTORICAL NOTE: Promulgated by the Department of Health and Hospitals, Office of the Secretary, Bureau of Health Services Financing, LR 29:603 (April 2003), amended by the Department of Health and Hospitals, Bureau of Health Services Financing, LR 38:

Subchapter L. Rewards for Fraud and Abuse Information

Subchapter M. Miscellaneous

§4229. Mailing

A. Mailing refers to the sending of a hard copy via U.S. mail or commercial carrier. Sending via facsimile or email is also acceptable, so long as a hard copy is mailed. Delivery via hand is also acceptable.

AUTHORITY NOTE: Promulgated in accordance with R.S. 36:254, 46:437.4 and 46:437.1-46:440.3 (Medical Assistance Program Integrity Law).

HISTORICAL NOTE: Promulgated by the Department of Health and Hospitals, Office of the Secretary, Bureau of Health Services Financing, LR 29:604 (April 2003), amended by the Department of Health and Hospitals, Bureau of Health Services Financing, LR 38:

Implementation of the provisions of this Rule may be contingent upon the approval of the U.S. Department of Health and Human Services, Centers for Medicare and Medicaid Services (CMS), if it is determined that submission to CMS for review and approval is required.

Family Impact Statement

In compliance with Act 1183 of the 1999 Regular Session of the Louisiana Legislature, the impact of this proposed Rule on the family has been considered. It is anticipated that this proposed Rule will have no impact on family functioning, stability and autonomy as described in R.S. 49:972.

Public Comments

Interested persons may submit written comments to J. Ruth Kennedy, Bureau of Health Services Financing, P.O. Box 91030, Baton Rouge, LA 70821-9030. She is responsible for responding to inquiries regarding this proposed Rule.

Public Hearing

A public hearing on this proposed Rule is scheduled for Wednesday, September 26, 2012 at 9:30 a.m. in Room 118, Bienville Building, 628 North Fourth Street, Baton Rouge, LA. At that time all interested persons will be afforded an opportunity to submit data, views or arguments either orally or in writing. The deadline for receipt of all written comments is 4:30 p.m. on the next business day following the public hearing.

Bruce D. Greenstein
Secretary

FISCAL AND ECONOMIC IMPACT STATEMENT FOR ADMINISTRATIVE RULES
RULE TITLE: Surveillance and Utilization Review Subsystem

I. ESTIMATED IMPLEMENTATION COSTS (SAVINGS) TO STATE OR LOCAL GOVERNMENT UNITS (Summary)

It is anticipated that implementation of this proposed rule will have no programmatic fiscal impact to the state other than the cost of promulgation for FY 12-13. It is anticipated that $3,526 ($1,763 SGF and $1,763 FED) will be expended in FY 12-13 for the state's administrative expense for promulgation of this proposed rule and the final rule.

II. ESTIMATED EFFECT ON REVENUE COLLECTIONS OF STATE OR LOCAL GOVERNMENTAL UNITS (Summary)

It is anticipated that the implementation of this proposed rule will not affect revenue collections other than the federal share of the promulgation costs for FY 12-13. It is anticipated that $1,763 will be collected in FY 12-13 for the federal share of the expense for promulgation of this proposed rule and the final rule.

III. ESTIMATED COSTS AND/OR ECONOMIC BENEFITS TO DIRECTLY AFFECTED PERSONS OR NONGOVERNMENTAL GROUPS (Summary)

This rule proposes to continue the provisions of the August 1, 2012 Emergency Rule, which amended the provisions governing the Surveillance and Utilization Review Subsystem (SURS) to ensure compliance with the payment suspension requirements of the Patient Protection and Affordable Care Act.

It is anticipated that implementation of this proposed rule will not have economic costs or benefits for directly affected persons or non-governmental groups in FY 12-13, FY 13-14, and FY 14-15.

IV. ESTIMATED EFFECT ON COMPETITION AND EMPLOYMENT (Summary)

This rule has no known effect on competition and employment.

J. Ruth Kennedy	Greg V. Albrecht
Medicaid Director	Chief Economist
1208#112	Legislative Fiscal Office

NOTICE OF INTENT

Department of Health and Hospitals
Office of Public Health

Disease Reporting Requirements
(LAC 51:II.105,113 and 999)

Notice is hereby given, in accordance with the Administrative Procedure Act, R.S. 49:950 et seq., that the state health officer acting through the Department of Health and Hospitals, Office of Public Health, pursuant to the authority in R.S. 40:4(A)(1), R.S. 40:5(2)(3)(5)(15)(17)(19)(20)(21), and R.S. 56:437, intends to amend and revise Title 51 (Public Health—Sanitary Code), Part II (Disease Reporting Requirements), by effecting substantive changes as outlined below. The proposed changes are due to Act 1 of the 2011 Regular Session of the Louisiana Legislature.

Title 51
PUBLIC HEALTH—SANITARY CODE
Part II. The Control of Diseases
Chapter 1. Disease Reporting Requirements
§105. Reportable Diseases and Conditions [formerly paragraph 2:003]

A. The following diseases or conditions are hereby declared reportable with reporting requirements by Class.

1. Class A Diseases or Conditions which Shall Require Reporting within 24 Hours

a. This class includes diseases of major public health concern because of the severity of disease and potential for epidemic spread. Class A diseases or conditions shall be reported to the Office of Public Health by telephone immediately upon recognition that a case, a suspected case, or a positive laboratory result is known. In addition, all cases of rare or exotic communicable diseases, unexplained death, unusual cluster of disease and all outbreaks shall be reported. The following diseases or conditions shall be classified as Class A for reporting requirements:

i. Acute Flaccid Paralysis;
ii. Anthrax;
iii. Avian and novel strain Influenza A (Initial Detection);
iv. Botulism;
v. Brucellosis;
vi. Cholera;
vii. Clostridum prefringens food-borne infection;
viii. Diptheria;
ix. Fish and Shellfish poisoning (Domoic Adid poisoning, Netrotxic shellfish poisoning, Ciguatera, Paralytic shellfish poisoning, scombroid) ;
x. Food-borne Infection;
xi. Haemophilus influenzae (invasive infection);
xii. Influenza-associated Mortality;
xiii. Measles (rubeola imported or indigenous);
xiv. Neisseria meningitidis (invasive infection);
xv. Outbreaks of any infectious diseases;
xvi. Pertussis;
xvii Plague (Yersinia pestis);
xviii. Poliomyelitis (paralytic and non-paralytic);
xix. Q Fever (Coxiella burnetii);
xx. Rabies (animal and human);
xxi. Ricin poisoning;
xxii. Rubella (congenital syndrome);
xxiii. Rubella (German measles);
xxiv. Severe Acute Respiratory Syndrome-associated Coronavirus (SARS-CoV);
xxv. Staphylococcus aureus, Vancomycin Intermediate or Resistant (VISA/VRSA);
xxvi. Staphylococcal Enterotxin B (SEB) Pulmonary poisoning;
xxvii. Smallpox;
xxviii. Tularemia (Francisella tularensis);
xxix. Viral Hemorrhagic Fever;
xxx. Yellow Fever.

2. Class B Diseases or Conditions which Shall Require Reporting within One Business Day

a. This class includes diseases of public health concern needing timely response because of potential for epidemic spread. The following Class B diseases shall be reported to the Office of Public Health by the end of the next business day after the existence of a case, a suspected case, or a positive laboratory result is known:

i. Amoeba (free living) infection (including Acanthamoeba, Naegleria, Balamuthia and others);
ii. Anaplasmosis;
iii. Arthropod-Borne Neuroinvasive Disease and other infections (including West Nile, St. Louis, California, Eastern Equine, Western Equine and others);
iv. Aseptic meningitis;
v. Babesiosis;
vi. Chagas disease;
vii. Chancroid;
viii. Dengue fever;
ix. Escherichia coli, Shiga-toxin producing (STEC), including E. coli O157:H7;
x. Granuloma inguinale;
xi. Hantavirus (Infection or Pulmonary Syndrome);
xii. Hemolytic-Uremic Syndrome;
xiii. Hepatitis A (acute illness);
xiv. Hepatitis B (acute illness and carriage in pregnancy);
xv. Hepatitis B (perinatal infection);
xvi. Hepatitis E;
xvii. Herpes (neonatal);
xviii. Human Immunodeficiency Virus [(HIV), infection in pregnancy][2];
xix. Human Immunodeficiency Virus [(HIV), perinatal exposure][2];
xx. Legionellosis;
xxi. Malaria;
xxii. Mumps;

xxiii. Salmonellosis;
xxiv. Shigellosis;
xxv. Syphilis[1];
xxvi. Tetanus;
xxvii. Tuberculosis[3];
xxviii. Typhoid Fever.

3. Class C Diseases or Conditions which Shall Require Reporting within Five Business Days

a. This class shall include the diseases of significant public health concern. The following diseases shall be reported to the Office of Public Health by the end of the workweek after the existence of a case, suspected case, or a positive laboratory result is known:

i. Acquired Immune Deficiency Syndrome (AIDS);[2]
ii. Anaplasma phagocytophilum
iii. Blastomycosis;
iv. Campylobacteriosis;
v. Chlamydial infection1;
vi. Coccidioidomycosis;
vii. Cryptococcosis;
viii. Cryptosporidiosis;
ix. Cyclosporiasis;
x. Ehrlichiosis (human granulocytic, human monocytic, Ehrlichia chaffeensis and ewingii);
xi. Enterococcus, Vancomycin Resistant [(VRE), invasive disease];
xii. Giardia;
xiii. Glanders;
xiv. Gonorrhea[1] (Genital, oral, ophthalmic, pelvic inflammatory disease rectal);
xv. Hansen Disease (leprosy);
xvi. Hepatitis B (carriage, other than in pregnancy);
xvii. Hepatitis C (acute illness);
xviii. Hepatitis C (past or present infection);
xix. Human Immunodeficiency Virus [(HIV) infection, other than as in Class B][2];
xx. Human T Lymphocyte Virus (HTLV I and II) infection;
xxi. Leptospirosis;
xxii. Listeria;
xxiii. Lyme Disease;
xxiv. Lymphogranuloma venereum1;
xxv. Melioidosis (Burkholderia pseudomallei)
xxvi. Meningitis eosinophilic
xxvii. Nipah virus infection
xxviii. Psittacosis;
xxix. Spotted fevers (Rickettsia species including Rocky Mountain Spotted Fever (RMSF);
xxx. Staphylococcal Toxic Shock Syndrome;
xxxi. Staphylococcus aureus, Methicillin/Oxacillin Resistant (MRSA), invasive infection);
xxxii. Streptococcal disease, Group A (invasive disease);
xxxiii. Streptococcal disease, Group B (invasive disease);
xxiv. Streptococcal Toxic Shock Syndrome;
xxxv. Streptococcus pneumoniae invasive disease;
xxxvi. Transmissible Spongiform Encephalopathies (Creutzfeld Jacob Disease and variants);
xxxvii. Trichinosis;
xxxviii. Varicella (chickenpox);
xxxix. Vibrio infections (other than cholera);
xl. Yersiniosis.

4. Class D Special Reportable Diseases or Conditions Shall Require Reporting within Five Business Days

a. This class shall include the diseases of significant public health concern. The following diseases/conditions shall be reported to the Office of Public Health by the end of the workweek after the existence of a case, suspected case, or a positive laboratory result is known:

i. cancer;
ii. monoxide exposure and / or poisoning;
iii. complications of abortion;
iv. congenital hypothyroidism[4];
v. galactosemia;
vi. heavy metal (arsenic, cadmium, mercury) exposure and/or poisoning (All Ages)[5];
vii. hemophilia;
viii. lead exposure and/or poisoning (children); (adults);
ix. pesticide-related illness or injury (all ages);
x. phenylketonuria[4];
xi. Reye's Syndrome;
xii. severe traumatic head injury;
xiii. severe under nutrition (severe anemia, failure to thrive);
xiv. sickle cell disease (newborns);
xv. spinal cord injury;
xvi. sudden infant death syndrome (SIDS).

5. Class E Syndromic Surveillance: Reportable Conditions seen at Emergency Departments of Acute Care Hospitals which Shall Require Reporting Electronically within One Business Day of the Visit

a. This class shall include all conditions seen at Emergency Departments of Acute Care Hospitals. The text content of the chief complaint for the visit or an International Classification of Disease Code shall be reported to the Office of Public Health by electronic means as specified by the Office of Public Health strating in January 2013.

B. Case reports not requiring special reporting instructions (see below) can be reported by mail or facsimile on Confidential Disease Report forms, or by phone (Call 800-256-2748 for forms and instructions.) or in an electronic format acceptable to the Office of Public Health

1. [1]Report on STD-43 form. Report cases of syphilis with active lesions by telephone, within one business day, to 504-219-4429.
2. [2]Report to the Louisiana HIV/AIDS Program: Visit www.hiv.dhh.louisiana.gov or call 504-568-7474 for regional contact information.
3. [3]Report on CDC72.5 (f.5.2431) card.
4. [4]Report to the Louisiana Genetic Diseases Program and Louisiana Childhood Lead Poisoning Prevention Programs: www.genetics.dhh.louisiana.gov or call 504-219-4413 or 800-242-3112.
5. [5]Report to the Section of Environmental Epidemiology and Toxicology: www.seet.dhh.louisiana.gov or call 888-293-7020.

AUTHORITY NOTE: Promulgated in accordance with the provisions of R.S. 40:4(A)(2) and R.S. 40:5(10).

HISTORICAL NOTE: Promulgated by the Department of Health and Hospitals, Office of Public Health, LR 28:1212 (June 2002), amended LR 32:1050 (June 2006), LR 34:2173 (October

2008), repromulgated LR 34:2582 (December 2008), LR 36:1014 (May 2010), LR 38:

§113. Laboratory Reporting Requirements [formerly paragraph 2:008]

A. The director of every laboratory whether public, private, hospital or other, within or out of the state shall report to the State Health Officer the results of all tests that are in any way clinically relevant, suggestive or indicative of an individual having active disease, past or present exposure to, past or present contact with and/or past or present association with any of the disease/conditions listed in the Public Health Sanitary Code, Part II, Chapter 1, §105. The results of the tests to be reported to the state health officer do not have to be conducted for diagnostic reasons, nor do the results have to be diagnostic or confirmatory. The report should be received in a timely manner consistent with the requirements of the diseases/conditions Class described in §105 and shall state the name, date of birth, sex, race, usual residence, specimen identification code/ID and test results of the tested individual as well as the name of the physician or person submitting the specimen. Contact information for the laboratory performing the test(s) must be provided. Laboratories shall not defer their Public Health Reporting responsibilities to any other authorities within the institutions they serve. In addition, laboratories performing tests on specimens received from other laboratories shall report to the state health officer all results as prescribed above plus the contact information for the facility/laboratory where the specimen originated. Moreover, no considerations, evaluations or concerns, regarding any test technology or test result by institutions and/or organizations whether federal, state or otherwise (e.g., FDA, CMS-CLIA, etc.) which may be overseeing, approving, evaluating or licensing laboratory testing, shall represent an a priori rationale for withholding laboratory reports from the state health officer.

B. A reference culture is required to be sent to the Office of Public Health Laboratory for the following micro-organisms within 5 working days of the final identification of the microorganism:

i. Bacillus anthracis (confirmed or suspected);
ii. Bordetella pertussis;
iii. Burkolderia mallei;
iv. Campylobacter spp.;
v. Corynebacterium diphtheria;
vi. E.Coli O157H7 or E.coli Shiga Toxin producing ;
vii. Francisella species;
viii. Mycobacterium tuberculosis, bovis and africanum;
ix. Plesiomonas spp.;
x. Salmonella;
xi. Shigella;
xii. Vibrio spp.;
xiii. Yersinia enterolytica;
xiv. Yersinia pestis.

C. If the original culture was from a sterile site: blood, spinal fluid, other internal fluid, tissue:

i. Haemophilus influenza type b or untyped;
ii. Neisseria meningitides;
iii. Streptococcus pneumonia.

D. Laboratory reports shall not be construed by the Office of Public Health as diagnosis. In the case of private patients, follow-up of laboratory reports shall be through the physician(s) submitting the specimen(s).

AUTHORITY NOTE: Promulgated in accordance with the provisions of R.S. 40:4(A)(2) and R.S. 40:5(10).

HISTORICAL NOTE: Promulgated by the Department of Health and Hospitals, Office of Public Health, LR 28:1214 (June 2002), amended LR 32:1052 (June 2006), LR 38:

Part XIX. Hospitals, Ambulatory Surgical Centers, Renal Dialysis Centers

Chapter 3. Operations and Maintenance

§309. Laboratory [formerly paragraph 19:024]

A. Microbiological cultures shall be disposed of in an incinerator approved by the Air Quality Division of the DNR or sterilized prior to disposal. Smoking and eating are not allowed in laboratory areas. Laboratories, especially horizontal work surfaces, shall be cleaned and disinfected at the end of each work day.

B. [Formerly paragraph 19:025] Sterilizers of the proper type and necessary capacity for adequate sterilization shall be provided and maintained in a satisfactory condition. The hospital shall adopt a recognized method of verifying sterilizer performance and records shall be kept of the sterilizer operations for at least a year. Quality control of sterilization procedures shall include placement of indicators insuring that heat/time requirements have been met in package interiors and at least weekly live spore testing in steam sterilizers. Live spore testing shall be conducted for each load which is gas sterilized. A mechanism shall be employed for re-sterilizing outdated packs and recalling sterilized supplies in the event of a spore test failure. Clean and sterilized supplies shall be dated and kept separate from soiled and contaminated supplies and equipment.

C. [Formerly paragraph 19:026] Blood bank refrigerators shall be kept clean and maintained at a temperature of 36° to 38°F (1° to 6°C), provided with an alarm and used for flood storage only. Time and temperature charts shall be maintained continuously and monitored and recorded daily. These records shall be maintained for at least a year. Alarm devices for refrigerators shall be provided.

AUTHORITY NOTE: Promulgated in accordance with the provisions or R.S. 40:4(A)(2) and R.S. 40:5(10).

HISTORICAL NOTE: Promulgated by the Department of Health and Hospitals, Office of Public Health, LR 28:1214 (June 2002), amended LR 32:1052 (June 2006), LR 38:

Family Impact Statement

1. The Effect on the Stability of the Family. None
2. The Effect on the Authority and Rights of Parents Regarding the Education and Supervision of Their Children. None
3. The Effect on the Functioning of the family. None
4. The Effect on the Family Earnings and Family Budget. None
5. The Effect on the Behavior and Personal Responsibility of Children. None
6. The Ability of the Family or Local Government to Perform the Function as Contained in the Proposed Rule. None

Public Comments

All interested persons are invited to submit written comments on the proposed regulation. Such comments should be submitted no later than Monday, September 10, 2012 at 4:30 p.m. to Theresa Sokel, Infectious Disease

Surveillance, Infectious Disease Epidemiology Section, Office of Public Health, 1450 Poydras, Suite 2155, New Orleans, LA 70112. Comments may be faxed to (504) 568-8290.

Public Hearing

A public hearing is scheduled for Thursday, September 27, 2012 at 10 a.m. in room 371 at the DHH Bienville Building, 628 North Fourth Street, Baton Rouge, LA 70802. Please call (225) 342-7653 in advance to confirm the time and place of the public hearing, as the public hearing will be cancelled if the requisite number of comments is not received.

Bruce D. Greenstein
Secretary

FISCAL AND ECONOMIC IMPACT STATEMENT FOR ADMINISTRATIVE RULES
RULE TITLE: Disease Reporting Requirements

I. ESTIMATED IMPLEMENTATION COSTS (SAVINGS) TO STATE OR LOCAL GOVERNMENT UNITS (Summary)

The proposed rule amends Part II (The Control of Diseases), Section 105 of the Louisiana Sanitary Code (LAC 51) to update current disease reporting requirements based on recommendations of the Council of State and Territorial Epidemiologists and the Centers for Disease Control (CDC).

The main purpose of this proposed rule change is to add, modify, or clarify over 30 different infectious diseases of public health importance that are rare. These changes are not expected to have a fiscal impact on state agencies. However, some of these conditions are of significant public concern and adding them will make reporting faster and potentially save an indeterminable amount in future treatment costs. State laboratories will also be required to send certain reference cultures to OPH, which will result in an indeterminable increase in supply and shipping costs. It is anticipated these costs will be minimal; however, they will vary annually depending on the number of microorganisms identified. OPH receives approximately $2 million annually in Federal grant funds from the CDC for prevention activities, including genetic testing of the new reference cultures. Depending on the number of reference cultures sent to the OPH lab each year, the tests will result in minimal increased costs that will be absorbed within the CDC grant fund balance.

This rule change also adds a requirement for syndromic surveillance reporting through the Louisiana Early Events Detection System (LEEDS). The LEEDS software was developed through Federal funding from the CDC and will have no fiscal impact on state agencies; however, emergency departments in state hospitals that do not currently participate will incur minimal costs for a technician to arrange for the data transfer. The proposed rule changes will result in an estimated cost to DHH-OPH of $1,074 to publish the notice of intent and the final rule in the *Louisiana Register*. This is a one-time cost that will be absorbed by the agency's budget.

II. ESTIMATED EFFECT ON REVENUE COLLECTIONS OF STATE OR LOCAL GOVERNMENTAL UNITS (Summary)

There is no estimated effect on revenue collections of state or local governmental units as a result of the rule change.

III. ESTIMATED COSTS AND/OR ECONOMIC BENEFITS TO DIRECTLY AFFECTED PERSONS OR NONGOVERNMENTAL GROUPS (Summary)

Emergency departments at acute care hospitals that do not currently participate in LEEDS will incur minimal costs for technicians to arrange for the data transfer. Non-state laboratories will also be required to send certain reference cultures to OPH, which will result in an indeterminable increase in supply and shipping costs. It is anticipated these costs will be minimal; however, they will vary annually depending on the number of microorganisms identified.

IV. ESTIMATED EFFECT ON COMPETITION AND EMPLOYMENT (Summary)

There is no estimated effect on competition and employment as a result of this rule change.

J. T. Lane
Assistant Secretary
1208#129

Gregory V. Albrecht
Chief Economists
Legislative Fiscal Office

NOTICE OF INTENT

Department of Health and Hospitals
Office of Public Health

Emergency Medical Services
Automated External Defibrillators
(LAC 48:I.6101, 6103 and 6105)

Under the authority of the Department of Health and Hospitals R.S. 40:1236.11 et seq., and in accordance with the provisions of the Administrative Procedure Act, R.S. 49:950 et seq., the Bureau of Emergency Medical Services, hereby gives notice of intent regarding the proposed rules establishing procedures to provide direction for possession, training, testing, notification requirements, manufacturers responsibility, maintenance, and use of automated external defibrillators. These activities will also become an unfunded mandate to EMS.

Title 48
PROFESSIONAL AND OCCUPATIONAL STANDARDS
Part I. General Administration
Subpart 3. Licensing and Certification
Chapter 61. Automated External Defibrillators
§6101. Definitions

A. The Department of Health and Hospitals, Office of Public Health, Bureau of Emergency Medical Services (BEMS) in the exercise of its regulatory authority has adopted the following meaning for the following terms:

Athletic Department—high schools, the division or department of an institution of higher education, including college, university, or community college, which schedules and compete in interscholastic athletics and intercollegiate athletics.

Automated External Defibrillator and AED as defined under R.S. 40:1236.12—a medical device heart monitor and defibrillator that:

a. Has received approval of its pre-market notification filed pursuant to 21 U.S.C. 360 (k) from the United States Food and Drug Administration.

b. Is capable of recognizing the presence or absence of ventricular fibrillation or rapid ventricular tachycardia and is capable of determining whether defibrillation should be performed.

c. Upon determining that defibrillation should be performed, the AED automatically charges and delivers an electrical impulse to an individual's heart.

d. Is capable of delivering the electrical impulse to an individual's heart.

e. Pediatric AED capabilities are required

Bureau—the Department of Health and Hospitals, Office of Public Health, BEMS

Cardiopulmonary Resuscitation and CPR—the process of ventilating and circulating blood for a patient in cardiopulmonary arrest usually in combination mouth to mouth with external chest compressions.

Certification—Adult and Pediatric CPR and AED users must be certified after successful completion of an Adult and Pediatric CPR and AED course recognized by a nationally recognized organization or association such as American Heart Association, American Red Cross, National Safety Council and Emergency Medical Physicians of America, which certification must be updated before the expiration listed on the certificate.

Emergency Care—the occurrence of a sudden, serious and unexpected sickness or injury that would lead a reasonable person, possessing an average knowledge of medicine and health, to believe that the sick or injured person requires urgent or unscheduled medical care.

Expected AED Users—any person designated by the possessor to render emergency care.

Health Club—a physical fitness facility emphasizing exercise to achieve physical fitness, or weight loss.

Physical Fitness Facility—a facility for profit or nonprofit with a membership of over fifty persons that offers physical fitness services. This term includes but is not limited to clubs, gymnasium, studios, health spas, weight control centers, clinics, figure salons, tanning centers, athletic or sport clubs, and YWCA and YMCA organizations. It shall not include a business limited solely to the practice of physical therapy, as defined in R.S.37:2401, by a therapist licensed by the Louisiana State Board of Medical Examiners, nor shall it apply to medically related services performed by a physician licensed by the Louisiana State Board of Medical Examiners in a private office, clinic, or hospital. It shall also not include a tanning salon, which does not have a membership of over fifty persons and does not offer physical fitness services, and is not inside, adjacent to or connected with a physical fitness facility.

Physical fitness services—services for the development of physical fitness through exercise or weight control.

Physical Fitness Center—any person or organization which, for profit or nonprofit, offers physical fitness services, whether at multiple outlets or single outlet. Any subsidiary of a center offering such services shall be deemed part of said center.

Possessor—any person, service, business, industry, physical fitness facility, institution of higher learning participating in intercollegiate sport, or security vehicle possessing an AED.

Premises—physical fitness facility or possessor, a distinct and definite locality, and may mean a room, shop, building, field or other definite area.

Sudden Cardiac Arrest—a medical emergency where expected person is unconscious, not breathing and has no pulse.

AUTHORITY NOTE: Promulgated in accordance with R.S. 40:1236.11

HISTORICAL NOTE: Promulgated by the Department of Health and Hospitals, Office of Public Health, Bureau of Emergency Medical Services, LR 38:

§6103. General Provisions

A. Possessor's Program

1. Possessor's Responsibility and Requirements

a. The AED is maintained and tested according to the manufacturer's guidelines; in accordance with state and federal rules and polices, including review of product warranty expirations for AED machine, pads and batteries.

b. A licensed physician or advanced practice nurse in the State of Louisiana who is authorized to prescribe in the State of Louisiana is involved in the possessor's program to ensure compliance with the requirements for training, emergency medical service (EMS) notification, and maintenance.

c. Expected AED users regularly, on the premises of a particular entity, such as a work site or users, who carry an AED in a private security patrol vehicle, receive appropriate training in CPR and in the use of an AED by the AHA or by any other nationally recognized course in CPR and AED use.

i. For purposes of this Paragraph, "expected AED users" shall be any person designated by the possessor to render emergency care.

d. The EMS system is activated as soon as possible when an individual renders emergency care to an individual in cardiac arrest by using CPR or an AED.

e. Any clinical use of the AED is reported to the licensed physician or advanced practice registered nurse involved in the possessor's program and BEMS, using the Cardiac Arrest Profile/Data Collection Form obtained from the BEMS office. A determination by the licensed physician or advanced practice registered nurse, whether or not the patient was treated in accordance with the pre-established protocol. A copy of the cardiac arrest profile/data collection form should be mailed

2. Any person or entity which possesses an AED shall notify BEMS and a local provider of emergency medical services, such as 911 service, local ambulance service, or the fire department of the acquisition, location and type of AED.

3. Any manufacturer, wholesale supplier, or retailer of an AED shall notify purchasers of AED's intended for use in the state of Louisiana of the requirements of R.S. 40:1236.13.

4. The owner of or the entity responsible for a physical fitness facility or fitness centers, shall keep an AED on its premises.

5. Any institution of higher education that competes in intercollegiate athletics shall have an AED on its premises in its athletic department, with posters approved by AHA/ARC on how to safely perform CPR and use the AED. The AED is to be placed in open view within two feet of a telephone to be able to access 911 in department and placed with easy access to coaches and athletic where games are to be completed.

a. Each high school that participates in interscholastic athletics shall have an AED on its premises, if funding is available.

AUTHORITY NOTE: Promulgated in accordance with R.S. 40:1236.11

HISTORICAL NOTE: Promulgated by the Department of Health and Hospitals, Office of Public Health, Bureau of Emergency Medical Services, LR 38:

§6105. Regulations and Reports

A. Regulate/Self Report

1. Compliance of notification upon prescribing AED by completion, signing, and submission of BEMS Automated External Defibrillator Acquisition Notification Form, to the BEMS office and notification to local provider of emergency services of BEMS notification information.

2. A written CPR/AED Protocol or Plan must exist for use in a sudden cardiac arrest (SCA) occurring at a physical fitness facility and file a copy of this protocol/plan with BEMS.

3. Every event in which an AED is placed on a person, the use must be reported to BEMS on the Cardiac Arrest Profile/Data Collection Form and reviewed by the medical oversight of possessor, in accordance with the AED Protocol/Plan and further determine if the AED Protocol/Plan should be modified. The review of use by medical oversight shall be privileged and confidential.

B. Non-Complying Provisions/Failure to Report

1. BEMS shall inspect the premises in response to a complaint which specifies the name, address and telephone number of the alleged violator filed with BEMS alleging a violation of R.S. 40:1236. BEMS may inspect facilities or premises at other times to ensure compliance with this Rule.

a. Penalties for Violations

i. If an AED possessor, inclusive of physical fitness facility, and/or athletic department violates this rule by failing to have on the premises an accessible and operational AED, or certified AED user, and to adopt or implement a plan for responding to medical emergencies then the following penalties will be assessed per violation. BEMS or its designee may issue to the facility a written administrative warning without monetary penalty for the initial violation with a 30 day notice to comply with corrective measures from date of violation.

ii. At least $100 but less than $150 for a second violation.

iii. At least $150 but less than $200 for a third or subsequent violation.

b. After a third violation against the facility, BEMS or its designee may report violations to the Louisiana attorney general's office or governing authorities for prosecution or further warning.

AUTHORITY NOTE: Promulgated in accordance with R.S. 40:1236.11

HISTORICAL NOTE: Promulgated by the Department of Health and Hospitals, Office of Public Health, Bureau of Emergency Medical Services, LR 38:

Family Impact Statement

1. The Effect on the Stability of the Family. The Rule is not anticipated to have any effect on the stability of the family.

2. The Effect on the Authority and Rights of Parents Regarding the Education and Supervision of their Children. The Rule will not have any effects on the authority and rights of parents.

3. The Effect on the Functioning of the Family. The Rule is not anticipated to have any effect on the functioning of the family.

4. The Effect on the Family Earnings and Family Budget. The proposed Rule will have any effect on family earnings and budget.

5. The Effect on the Behavior and Personal Responsibility of Children. The proposed Rule will not have any effect on the behavior and personal responsibility of children.

6. The Ability of the Family or Local Government to Perform the Function as Contained in the Proposed Rule. This proposed Rule will have no effect on the ability of the family or local government to perform the function as contained in the proposed Rule.

Public Comments

In addition, all interested persons are invited to submit written comments on the proposed rule. Such comments must be received no later than September 28, 2012, by 4:30 p.m., and should be addressed to Stephen Phillipe, Bureau of Emergency Medical Services Program Manager, Office of Public Health, 11224 Boardwalk Drive (Suite-A1), Baton Rouge, LA 70816, or faxed to (225) 275-1826.

Public Hearing

DHH-Bureau of Emergency Medical Services will conduct a public hearing at 10 a.m. on September 26, 2012, in Room 371 of the Bienville Building, 628 North Fourth Street, Baton Rouge, LA.

Bruce D. Greenstein
Secretary

FISCAL AND ECONOMIC IMPACT STATEMENT FOR ADMINISTRATIVE RULES
RULE TITLE: Emergency Medical Services Automated External Defibrillators

I. ESTIMATED IMPLEMENTATION COSTS (SAVINGS) TO STATE OR LOCAL GOVERNMENT UNITS (Summary)

The proposed rule implements Acts 443 and 885 of the 2004 Regular Session and the amended and reenacted version of the law in Act 706 of the 2012 Regular Session. The purpose of the proposed rule is to establish procedures to provide direction for possession, training, testing, notification requirements, manufacturers responsibility, maintenance, and use of automated external defibrillators (AEDs) by the Bureau of Emergency Medical Service (BEMS). In particular, high schools that schedule and compete in interscholastic athletics are required to have AEDs on the premises only if funding is available. However, all health clubs, physical fitness facilities, and athletic departments in universities or community colleges will be required to have an AED on site. As a result, state universities or community colleges that do not currently have an AED shall purchase an AED and incur costs of $2,100 to $3,000 for purchasing, training, testing, notification requirements, manufacturers responsibility, maintenance and use of the AED. The proposed change will result in an estimated cost of $746.00 to publish the notice of intent and the final rule in the Louisiana Register. This is a one-time cost that will be absorbed in the agency's existing budget.

II. ESTIMATED EFFECT ON REVENUE COLLECTIONS OF STATE OR LOCAL GOVERNMENTAL UNITS (Summary)

For any second or third violation of the requirement to have and maintain an AED on the premises of mandated athletic departments or physical fitness facilities revenue of

approximately $100 to $200 per violation will be generated. Annual revenue will vary depending on the number of violations.

III. ESTIMATED COSTS AND/OR ECONOMIC BENEFITS TO DIRECTLY AFFECTED PERSONS OR NONGOVERNMENTAL GROUPS (Summary)

The proposed rule will impact certain nongovernmental groups (e.g., owners of health clubs, physical fitness facilities, and athletic departments in private high schools, colleges, university or community colleges) as they may experience an increased cost to comply with the proposed rule. These costs of $2,100 to $3,000 will cover purchasing, training, testing, notification requirements, manufacturers responsibility, maintenance and use of the automated external defibrillator.

IV. ESTIMATED EFFECT ON COMPETITION AND EMPLOYMENT (Summary)

There is no effect on competition and employment anticipated as a result of the proposed rule change.

J. T. Lane	Gregory V. Albrecht
Assistant Secretary	Chief Economist
1208#126	Legislative Fiscal Office

NOTICE OF INTENT

Department of Health and Hospitals
Office of Public Health

Sanitary Code—Marine and Fresh Water Animal Food Products (LAC 51:IX.321, 327, 329 and 331)

Notice is hereby given, in accordance with the Administrative Procedure Act, R.S. 49:950 et seq., that the state health officer acting through the Department of Health and Hospitals, Office of Public Health, pursuant to the authority in R.S. 40:4(A)(1), R.S.40:5(2)(3)(5)(15)(17)(19)(20)(21), and R.S. 56:437, intends to amend and revise Title 51 (Public Health—Sanitary Code), Part IX (Marine and Fresh Water Animal Food Products), by effecting substantive changes as outlined below. The proposed changes are necessary to make changes to the Louisiana State Sanitary Code (LAC 51) in effort to be in compliance with the changes made to the National Shellfish Sanitation Program (NSSP) Model Ordinance. The executive board of the Interstate Shellfish Sanitation Conference (ISSC) adopted changes to the NSSP Model Ordinance, with concurrence from the U.S. Food and Drug Administration (USFDA), at their March 2012 meeting. Louisiana must adopt these changes to remain in compliance with the USFDA, which will result in oysters being allowed to be shipped in interstate commerce.

Title 51
PUBLIC HEALTH—SANITARY CODE
Part IX. Marine and Fresh Water Animal Food Products

Chapter 3. Preparation and Handling of Seafood for Market

§321. Shipping Shell-Stock Requirements [formerly paragraph 9:047]

A. - C. …

D. [Formerly paragraph 9:050] Railroad cars and trucks in which shellfish are shipped in sacks shall be kept clean. All cars and trucks shall be subjected to proper inspection to see that they conform to this rule. Conveyances used to transport shellstock shall be constructed to prevent contamination, deterioration, or decomposition of the shellstock during transport. Conveyances must be pre-chilled to 45°F or below prior to loading. The dealer shall keep a record of compliance with the pre-chilling requirement.

E. - F. …

AUTHORITY NOTE: Promulgated in accordance with R.S. 40:4.A.(1), R.S. 40:5(2)(3)(5)(7)(15), and R.S. 40:5.3.

HISTORICAL NOTE: Promulgated by the Department of Health and Hospitals, Office of Public Health, LR 28:1307 (June 2002), amended by the Department of Health and Hospitals, Office of Public Health, Center for Environmental Health Services, LR 34:445 (March 2008), LR 34:2175 (October 2008), LR 35:1239 (July 2009), LR 38:

§327. Refrigeration of Shell-Stock Oysters, Clams and Mussels [formerly paragraph 9:052]

A. - D. …

* * *

E. To comply with the time to temperature requirements for harvested shellstock for raw consumption, the type of cooling must be capable of achieving the required internal temperature within the time frames required in the *Vibrio vulnificus* control plan developed by the Office of Public Health Molluscan Shellfish Program (see §329.A). The use of tempering and inadequate cooling is not acceptable. Cooling that occurs prior to receipt by the original dealer does not alleviate the dealer requirement to document the time to internal temperature requirements.

F. To comply with the time to temperature requirements for harvested shellstock for shucking or post-harvest processing consumption, the type of cooling must be capable of achieving the required internal temperature within the time frames required in the *Vibrio vulnificus* control plan developed by the Office of Public Health Molluscan Shellfish Program (see §331.A) or in the matrix for all other shellstock. The use of tempering and inadequate cooling is not acceptable. Cooling that occurs prior to receipt by the original dealer does not alleviate the dealer requirement to document the time to internal temperature requirements.

AUTHORITY NOTE: Promulgated in accordance with R.S. 40:4.A.(1), R.S. 40:5(2)(3)(5)(7)(15), and R.S. 40:5.3.

HISTORICAL NOTE: Promulgated by the Department of Health and Hospitals, Office of Public Health, LR 28:1308 (June 2002), amended LR 31:2896 (November 2005), LR 34:2175 (October 2008), LR 36:1016 (May 2010), LR 38:96 (January 2012), LR 38:

§329. Refrigeration Requirements for Shell-stock Harvested for Raw Consumption during the Months January through December [formerly paragraph 9:052-1]

A. - A.3. …

B. For shellstock harvested for raw consumption, harvesters will adhere to the applicable time and temperature controls as established by the *Vibrio vulnificus* control plan in this Section developed by the Office of Public Health Molluscan Shellfish Program. The harvester must provide harvest records to the original shellfish dealer demonstrating compliance with the applicable time and temperature requirements. This record may be in the form of a harvester tag, trip record, or other record deemed appropriate by the Office of Public Health Molluscan Shellfish Program. The record must include the date and time harvest begins for each lot of shellfish harvested. It shall be the responsibility

of the harvester to properly separate and identify each lot upon being placed under refrigeration. The harvester shall document the time harvest begins for each lot prior to harvest and shall immediately document the time each lot is placed under refrigeration. It shall also be the responsibility of the harvester to record the number of sacks contained within each lot immediately after oysters are placed under refrigeration. Harvest vessels equipped with refrigeration capabilities must provide documentation to the original dealer that the time and temperature requirements established by the *Vibrio vulnificus* control plan developed by the Office of Public Health Molluscan Shellfish Program (see §329.A) have been met.

C. Under the requirements of the *Vibrio vulnificus* control plan during the months of March through November, if oysters are removed from a vessel before the product reaches an internal temperature of 55°F or below, it is the dealer's responsibility to verify that all last lots of oysters harvested and placed in mechanical refrigeration meet the internal temperature of 55°F or below in six hours. This shall be documented on the same log sheet that was provided to the dealer from the harvester.

AUTHORITY NOTE: Promulgated in accordance with R.S. 40:4.A.(1), R.S. 40:5(2)(3)(5)(7)(15), and R.S. 40:5.3.

HISTORICAL NOTE: Promulgated by the Department of Health and Hospitals, Office of Public Health, LR 28:1308 (June 2002), amended LR 31:2896 (November 2005), LR 34:2175 (October 2008), LR 36:1016 (May 2010), LR 38:

§331. Refrigeration Requirements for Shell-Stock Harvested for Shucking or Post-Harvest Processing by a Certified Dealer during the months January through December [formerly paragraph 9:052-2]

A. Time to refrigeration requirements for shell-stock harvested for shucking or post-harvest processing by a certified dealer during the months January through December shall be based on the average monthly growing water temperature developed by the Office of Public Health Molluscan Shellfish Program according to the following schedule.

1. Water Temperature: <50°F. Shellstock shall be placed under mechanical refrigeration at an air temperature not to exceed 45°F within 36 hours from the time harvesting begins.

2. Water Temperature: 50°F to 60°F. Shellstock shall be placed under mechanical refrigeration at an air temperature not to exceed 45°F within 24 hours from the time harvesting begins.

3. Water Temperature: 60°F - 80°F. Shellstock shall be placed under mechanical refrigeration at an air temperature not to exceed 45°F within 18 hours from the time harvesting begins.

4. Water Temperature: ≥81°F. Shellstock shall be placed under mechanical refrigeration at an air temperature not to exceed 45°F within 12 hours from the time harvesting begins.

B. Dealer/harvester tags utilized to identify shell-stock harvested for shucking or post-harvest processing consumption by a certified dealer must be identified with the green tag which states: "FOR SHUCKING BY A CERTIFIED DEALER OR POST-HARVEST PROCESSING ONLY".

C. For shellstock harvested for shucking or post-harvest processing consumption, harvesters will adhere to the applicable time and temperature controls as established in this Section by the Office of Public Health Molluscan Shellfish Program. The harvester must provide harvest records to the original shellfish dealer demonstrating compliance with the applicable time and temperature requirements. This record may be in the form of a harvester tag, trip record, or other record deemed appropriate by the Office of Public Health Molluscan Shellfish Program. The record must include the date and time harvest begins for each lot of shellfish harvested. Harvest vessels equipped with refrigeration capabilities must provide documentation to the original dealer that the time and temperature requirements established by the Office of Public Health Molluscan Shellfish Program have been met.

D. "Green" or restricted use tag product may be shipped in commerce if the internal temperature is 50°F or below. If the oysters have not reached an internal temperature of 50°F or below, the product may be shipped provided a working time/temperature recording device accompanies every shipment. Shipments of 4 hours or less will not be required to have a working time/temperature recording device. The documentation stating the time of shipment will accompany the bill of lading and will be used to determine if shipment is less than 4 hours.

E. All shellstock that has been refrigerated must not be allowed to remain without mechanical refrigeration for more than 2 hours at points of processing or transfer such as loading docks.

AUTHORITY NOTE: Promulgated in accordance with R.S. 40:4.A.(1), R.S. 40:5(2)(3)(5)(7)(15), and R.S. 40:5.3.

HISTORICAL NOTE: Promulgated by the Department of Health and Hospitals, Office of Public Health, LR 28:1308 (June 2002), amended LR 31:2896 (November 2005), LR 34:2175 (October 2008), LR 36:1016 (May 2010), LR 38:97 (January 2012), LR 38:

Family Impact Statement

1. The Effect on the Stability of the Family. There will be no effect on the stability of the family.

2. The Effect on the Authority and Rights of Parents Regarding the Education and Supervision of their Children. There will be no effect on the authority and rights of parents regarding the education and supervision of their children.

3. The Effect on the Functioning of the Family. There will be no effect on the functioning of the family.

4. The Effect on the Family Earnings and Family Budget. There will be no effect on family earnings or budget.

5. The Effect on the Behavior and Personal Responsibility of Children. There will be no effect on the behavior and personal responsibility of children.

6. The Ability of the Family or Local Government to Perform the Function as Contained in the Proposed Rule. There will be no effect on the ability of the family or a local government to perform the function as contained in the proposed rule.

Public Comments

All interested persons are invited to submit written comments on the proposed regulation. Such comments should be submitted no later than Monday, September 10, 2012, at 4 p.m. to David Guilbeau, Commercial Seafood Program Administrator, Office of Public Health, 628 N. Fourth Street, P.O. Box 4489, Baton Rouge, LA 70821. Comments may be faxed to (225) 342-7607.

Public Hearing

A public hearing is scheduled for Thursday, September 27, 2012 at 10 a.m. in room 371 at the DHH Bienville Building, 628 North Fourth Street, Baton Rouge, LA 70802. Please call (225) 342-7653 in advance to confirm the time and place of the public hearing, as the public hearing will be cancelled if the requisite number of comments is not received.

Bruce D. Greenstein
Secretary

FISCAL AND ECONOMIC IMPACT STATEMENT FOR ADMINISTRATIVE RULES
RULE TITLE: Sanitary Code—Marine and Fresh Water Animal Food Products

I. ESTIMATED IMPLEMENTATION COSTS (SAVINGS) TO STATE OR LOCAL GOVERNMENT UNITS (Summary)

The proposed rule amends Part IX (Marine and Fresh Water Animal) Sections 321, 327, 329 and 331 of the *Louisiana Administrative Code* to comply with changes made to the National Shellfish Sanitation Program (NSSP) Model Ordinance to allow oysters to be shipped in interstate commerce. The proposed change will result in an estimated cost of $756 to publish the notice of intent and the final rule in the *Louisiana Register*. This is a one-time cost that will be absorbed in the agency's existing budget.

II. ESTIMATED EFFECT ON REVENUE COLLECTIONS OF STATE OR LOCAL GOVERNMENTAL UNITS (Summary)

There will be no effect on revenue collections of state or local governmental units as a result of the proposed rule change. There are no new or modified penalties or fees associated with this rule change.

III. ESTIMATED COSTS AND/OR ECONOMIC BENEFITS TO DIRECTLY AFFECTED PERSONS OR NONGOVERNMENTAL GROUPS (Summary)

The proposed rule change to section 321 will add additional language requiring conveyances used to transport shellstock to be pre-chilled to 45˚F or below prior to loading the product. The dealer will incur minimal costs associated with recordkeeping regarding compliance of the pre-chilling requirement.

The proposed change to section 327 would add additional language stating that the type of cooling must be capable of achieving the required internal temperature within the time frames required by the Office of Public Health Molluscan Shellfish Program. This language will be applicable to both oysters for raw consumption and oysters for shucking or post-harvest processing. The harvester and dealer will incur an indeterminable amount of costs if they do not currently have the proper equipment to achieve the required temperatures. Costs will vary depending on the type and quantity each dealer or harvester will need to purchase.

The third proposed change adds additional language to section 329 stating that the harvester shall keep records and provide them to the original shellfish dealer demonstrating compliance with the applicable time and temperature requirements. Additionally, if the oysters are removed from a vessel before they reach 55˚F then it is the dealer's responsibility to verify and document that the temperature is met within six hours. The harvester and dealer will incur minimal costs associated with these recordkeeping requirements.

The proposed amendment to section 331 will change the time-temperature requirements for oysters that are intended for shucking or post-harvest processing in order to comply with the NSSP Model Ordinance. Also, it requires a time-temperature recording device for the conveyance of harvested oysters with an internal temperature over 50˚F when the shipping time is over 4 hours. The cost of this requirement will vary depending on whether the transportation vehicle has the required recording device already installed or not. Those dealers that do not currently have a temperature-monitoring device on their transportation vehicle will have to purchase the device. However, most dealers already have this equipment and are aware of the recent regulation changes made to the NSSP Model Ordinance. The cost for the recording device ranges from $8 to $10. The dealer's total cost will be calculated based on the price of the device and the number of shipments.

IV. ESTIMATED EFFECT ON COMPETITION AND EMPLOYMENT (Summary)

There is no effect on competition and employment anticipated as a result of the proposed rule change.

J.T. Lane	Gregory V. Albrecht
Assistant Secretary	Chief Economist
1208#128	Legislative Fiscal Office

NOTICE OF INTENT

Department of Health and Hospitals
Office of Public Health

Sanitary Code—Plumbing
(LAC 51:I.101, 123; VI.101, 109, 113, 121, 319, 321, 509, 705, 709, 1117, 1313, 1515; VII.101, 2117; X.101, 113, 115; XII.101, 335, 344, 371; XIV.101- 1813; XVI.101; XVII.101, 107, 303; XVIII.101; XXI.105; XXIII.301; and XXIV.103, 717)

Under the authority of R.S. 40:4 and 40:5, and in accordance with R.S. 49:950 et seq., the Administrative Procedure Act, notice is hereby given that the state health officer, acting through the Department of Health and Hospitals, Office of Public Health (DHH-OPH), intends to amend Part XIV (Plumbing) of the Louisiana State Sanitary Code [LAC 51 (Public Health—Sanitary Code)]. These amendments are intended to update the current state plumbing code which was last promulgated on July 20, 2000 and had an effective date of October 20, 2000.

In that Part XIV (Plumbing) is referenced in various other Parts of LAC 51 and the whole of these Parts constitutes the entirety of the Louisiana State Sanitary Code, certain Sections of Parts I, VI, VII, X, XII, XVI, XVII, XVIII, XXI, XXIII, and XXIV of LAC 51 are also proposed to be amended so that all of the Parts of the entire Louisiana State Sanitary Code comport with one another in respect to such plumbing references.

This proposed rule additionally implements House Concurrent Resolution No. 4 of the 2008 Regular Session regarding privacy wall or partition requirements for male urinals in public toilet rooms as well as implementing Act No. 362 of the 2011 Regular Session which effectively lowers the lead content of the wetted surfaces of certain pipe, plumbing fittings and fixtures which convey potable water. The specific provisions of Parts XII and XIV of the proposed rule which implement Act No. 362 of the 2011 Regular Session shall not become effective until January 1, 2013. Such specific provisions are identified with "Effective Date Notes" contained within the text of the proposed rule.

Other than those specific portions of Parts XII and XIV of the proposed rule to implement Act No. 362 of the 2011 Regular Session (which will become effective on January 1, 2013), the remainder of this proposed rule shall become effective on [the date which is 3 months after the date of promulgation in the Louisiana Register as a final rule].

For the reasons set forth above, Parts I, VI, VII, X, XII, XIV (Plumbing), XVI, XVII, XVIII, XXI, XXIII, and XXIV of the Louisiana State Sanitary Code (LAC 51) are proposed to be amended as follows:

Title 51
PUBLIC HEALTH—SANITARY CODE
Part I. General Provisions

Chapter 1. General

§101. Definitions
[formerly paragraph 1:001]

A. …

B. Unless otherwise specifically provided herein, the following words and terms used in this Chapter are defined for the purposes thereof as follows.

* * *

LSPC—Louisiana State Plumbing Code, *i.e.*, Part XIV (Plumbing) of this Code (LAC 51:XIV).

* * *

Substantial Renovation—

a.i. - c.ii. …

d. The text contained in Subparagraphs a.i through c.ii continues to apply when any particular portion of this code calls for an additional requirement to the term substantial renovation (e.g., see LAC 51:XIV.411.A.1).

* * *

AUTHORITY NOTE: Promulgated in accordance with R.S. 40:4 and R.S. 40:5(3)(7)(17)(19)(20)(21).

HISTORICAL NOTE: Promulgated by the Department of Health and Hospitals, Office of Public Health, LR 27:1693 (October 2001), repromulgated LR 28:1209 (June 2002), amended LR 28:2528 (December 2002), LR 34:652 (April 2008), LR 38:

§123. Exemptions from Code
[formerly paragraph 1:011]

A. - A.2. …

a. The text, or a portion thereof, contained in Paragraph "A.2." does not apply when any particular provision of this code allows an exception to such requirement (e.g., see LAC 51:XIV.411.A.1.a and LAC 51:XXIII.301.A.3 - relative to a real property ownership change only). The non-applicable text, or a portion thereof, of Paragraph "A.2." is limited to what is allowed under the specific exception thereto. The wording of this Subparagraph shall not be deemed to supercede the need to upgrade when:

i. Paragraph A.1 is applicable (i.e., substantial renovation is undertaken);

ii. the business located therein changes (i.e., the occupancy classification changes) under Paragraph A.2.; or,

iii. Paragraph A.3 is applicable (i.e., a serious health threat exists).

3. …

AUTHORITY NOTE: Promulgated in accordance with R.S. 40:4 and R.S. 40:5.

HISTORICAL NOTE: Promulgated by the Department of Health and Hospitals, Office of Public Health, LR 27:1695 (October 2001), amended LR 28:1211 (June 2002), LR 38:

Part VI. Manufacturing, Processing, Packing and Holding of Food, Drugs and Cosmetics

Chapter 1. General Regulations, Definitions, Permits, Registration, Machinery, Equipment and Utensils, Premises and Buildings, Temperature Control

§101. Definitions
[formerly paragraph 6:001]

A. Unless otherwise specifically provided herein, the following words and terms used in this Chapter of the sanitary code, and all other Chapters which are adopted or may be adopted, are defined for the purposes thereof as follows.

* * *

LSPC—Louisiana State Plumbing Code, *i.e.*, Part XIV (Plumbing) of this Code (LAC 51:XIV).

* * *

AUTHORITY NOTE: The first source of authority for promulgation of the sanitary code is in R.S. 36:258(B), with more particular provisions found in Chapters 1 and 4 of Title 40 of the Louisiana Revised Statutes. This Part is promulgated in accordance with the provisions of R.S. 40:4(A)(1)(a). Also see R.S. 40:601 et seq.

HISTORICAL NOTE: Promulgated by the Department of Health and Hospitals, Office of Public Health, LR 28:1230 (June 2002), amended LR 38:

§109. Lighting/Ventilation, Plans Submission, Construction and Materials; Insect and Rodent Control; Sanitary Facilities
[formerly paragraph 6:010]

A. All factory buildings shall be well lighted with not less than 40 foot-candles on all working surfaces, and shall be well ventilated. In accordance with §405.A.1.b of the Louisiana State Plumbing Code (LSPC), toilet rooms shall be provided with mechanical exhaust ventilation.

B. - H. …

I. [Formerly paragraph 6:017] Every factory shall be provided with toilet and hand washing facilities as required by §411, entitled "Minimum Plumbing Fixtures", of the LSPC. Handwashing facilities shall be located convenient to all restrooms and food processing areas. Facilities shall be equipped with hot and cold water under pressure, delivered through a mixer faucet. Soap and sanitary towels or air dryer shall be provided at each lavatory.

J. …

AUTHORITY NOTE: Promulgated in accordance with provisions of R.S. 40:4(A)(1)(a). Also see 40:601, *et seq*.

HISTORICAL NOTE: Promulgated by the Department of Health and Hospitals, Office of Public Health, LR 28:1232 (June 2002), amended LR 38:

§113. Water Supply—Ample Supply, Not Cross-Connected, Drinking Fountains
[formerly paragraph 6:022]

A. …

B. [Formerly paragraph 6:023] Drinking fountains shall be provided as required by §411, entitled "Minimum Plumbing Fixtures", of the LSPC. Drinking fountains shall meet the specifications as described in §415.C of the LSPC or obtain approval of the state health officer.

AUTHORITY NOTE: Promulgated in accordance with provisions of R.S. 40:4(A)(1)(a). Also see 40:601, et seq.

HISTORICAL NOTE: Promulgated by the Department of Health and Hospitals, Office of Public Health, LR 28:1233 (June 2002), amended LR 38:

§121. By Products and Waste Material [formerly paragraph 6:033]

A. …

B. [Formerly paragraph 6:034] Drainage must be provided to take care of ensilage juices. Drains shall be of size and construction as specified in Table 725.A.1, "Building Drains and Sewers," of the LSPC.

C. — E. …

AUTHORITY NOTE: Promulgated in accordance with provisions of R.S. 40:4(A)(1)(a). Also see 40:601, *et seq*.

HISTORICAL NOTE: Promulgated by the Department of Health and Hospitals, Office of Public Health, LR 28:1234 (June 2002), amended LR 38:

Chapter 3. Current Good Manufacturing Practices in Manufacturing, Processing, Packing or Holding Human Food

§319. Toilet Facilities [formerly paragraph 6:068]

A. Each plant shall provide its employees with toilet and associated hand washing facilities within the plant according to requirements of §411 of the LSPC and each toilet shall be furnished with toilet tissue. The facilities shall be maintained in a sanitary condition and kept in good repair at all times. Doors to toilet rooms shall be self-closing and shall not open directly into areas where food is exposed to airborne contamination except where alternate means have been taken to prevent such contamination (such as double doors, positive air flow systems, etc.). Signs shall be posted directing employees to wash their hands with cleaning soap or detergents after using the toilet.

AUTHORITY NOTE: Promulgated in accordance with provisions of R.S. 40:4(A)(1)(a). Also see 40:601, *et seq*.

HISTORICAL NOTE: Promulgated by the Department of Health and Hospitals, Office of Public Health, LR 28:1236 (June 2002), amended LR 38:

§321. Hand Washing Facilities [formerly paragraph 6:069]

A. Facilities for hand washing and, where appropriate, sanitizing solution shall be provided at each location in the plant where good sanitary practices require employees to wash or sanitize and dry their hands, and at least in areas where foods are handled. Numbers of lavatories shall be provided as required in §411 of the LSPC. Such facilities shall be furnished with running water at a suitable temperature for hand washing, effective hand cleaning and sanitizing preparations, sanitary towel service or suitable drying devices, and, where appropriate, easily cleanable waste receptacles.

AUTHORITY NOTE: Promulgated in accordance with the provisions of R.S. 40:4(A)(1)(a). Also see R.S. 40:601, *et seq*.

HISTORICAL NOTE: Promulgated by the Department of Health and Hospitals, Office of Public Health, LR 28:1236 (June 2002), amended LR 38:

Chapter 5. Bakeries and Manufacturing Confectioneries

§509. General Provisions; Time/Temperature Controls for Preparation of Fresh Custard and Cream Fillings [formerly paragraph 6:085]

A. - B. …

C. [Formerly paragraph 6:087] Every bakery or manufacturing confectionery shall provide toilet facilities for employees as required by §411 of the LSPC. All toilet rooms shall have at least 20 foot-candles of lighting and, in accordance with §405.A.1.b of the LSPC, mechanical exhaust ventilation. Toilet rooms shall be kept clean and in good repair.

D. [Formerly paragraph 6:088] Lavatory (hand washing) facilities shall be provided in all restrooms in accordance with §411 of the LSPC and an additional lavatory/lavatories shall be conveniently located in each of the food processing and handling areas. Facilities shall be equipped with hot and cold water under pressure, delivered through a mixer faucet. Soap and sanitary towels or air dryer shall be provided at each lavatory.

E. - P. …

AUTHORITY NOTE: Promulgated in accordance with provisions of R.S. 40:4(A)(1)(a). Also see 40:601, *et seq*.

HISTORICAL NOTE: Promulgated by the Department of Health and Hospitals, Office of Public Health, LR 28:1239 (June 2002), amended LR 38:

Chapter 7. Food Storage Warehouse and Food Salvaging Operations

§705. Building Construction [formerly paragraph 6:112]

A. - C. …

D. [Formerly paragraph 6:115] Every warehouse and salvaging operation shall be provided with toilet and hand washing facilities for employees as required by §411, titled "Minimum Plumbing Fixtures," of the LSPC. Hand washing facilities shall be located convenient to all toilet facilities. Facilities shall be equipped with hot and cold water under pressure, delivered through a mixer faucet. Soap and sanitary towels or air dryer shall be provided at each lavatory. These facilities shall be kept clean. Toilet room doors shall be self-closing.

E. …

AUTHORITY NOTE: Promulgated in accordance with provisions of R.S. 40:4(A)(1)(a). Also see 40:601, *et seq*.

HISTORICAL NOTE: Promulgated by the Department of Health and Hospitals, Office of Public Health, LR 28:1240 (June 2002), amended LR 38:

§709. Water Supply [formerly paragraph 6:120]

A. …

B. [Formerly paragraph 6:121] Drinking fountains shall be provided as required by §411, entitled "Minimum Plumbing Fixtures" of the LSPC. Drinking fountains shall meet specifications as described in Part XVII, §107.B of this Code and meet with the approval of the state health officer.

AUTHORITY NOTE: Promulgated in accordance with provisions of R.S. 40:4(A)(1)(a). Also see 40:601, *et seq*.

HISTORICAL NOTE: Promulgated by the Department of Health and Hospitals, Office of Public Health, LR 28:1240 (June 2002), amended LR 38:

Chapter 11. Soft Drink Manufacturing

§1117. Toilet and Lavatory Facilities [formerly paragraph 6:146]

A. Toilet and lavatory facilities shall be provided as required in §411 of the LSPC, and shall be maintained in a clean and sanitary condition. Toilet and washroom fixtures shall be so constructed and so operated as to prevent

backflow or back-siphonage as defined in Chapter 2, §203.A and Chapter 6, §609.G.2 of the LSPC, from such fixtures into the water supply. Toilet rooms shall have no direct connection with rooms used for manufacturing or bottling and shall have self-closing doors. Additional lavatory/lavatories shall be conveniently located in the syrup room and other food processing and handling areas. Facilities shall be equipped with hot and cold water under pressure, delivered through a mixer faucet. Soap and sanitary towels or air dryer shall be provided at each lavatory.

AUTHORITY NOTE: Promulgated in accordance with provisions of R.S. 40:4(A)(1)(a). Also see 40:601, *et seq*.

HISTORICAL NOTE: Promulgated by the Department of Health and Hospitals, Office of Public Health, LR 28:1246 (June 2002), amended LR 38:

Chapter 13. Cold Storage and Ice Plants

§1313. Toilet and Lavatory Facilities [formerly paragraph 6:173]

A. Every artificial ice plant and cold storage plant shall be provided with toilet and hand washing facilities for employees as required by §411, titled "Minimum Plumbing Fixtures" of the LSPC. Handwashing facilities shall be located conveniently to all toilet facilities. These facilities shall be kept clean. Toilet room doors shall be self-closing.

AUTHORITY NOTE: Promulgated in accordance with provisions of R.S. 40:4(A)(1)(a). Also see 40:601, *et seq*.

HISTORICAL NOTE: Promulgated by the Department of Health and Hospitals, Office of Public Health, LR 28:1249 (June 2002), amended LR 38:

Chapter 15. Current Good Manufacturing Practices in the Manufacture of Drugs

§1515. Building Requirements [formerly paragraph 6:198-1]

A. - B.4 …

C. [Formerly paragraph 6:198-3] Provide a supply of potable water [LAC 51:XII (Water Supplies)] under conditions of positive pressure in a plumbing system designed in accord with the LSPC and free of defects that could cause or contribute to contamination of any drug. Drains shall be a minimum of 4 inches, and where connected directly to a sewer, shall be equipped with properly vented fixture traps to prevent sewer gas entry into any occupied space.

D. - .E. …

AUTHORITY NOTE: Promulgated in accordance with provisions of R.S. 40:4(A)(1)(a). Also see 40:601, *et seq*.

HISTORICAL NOTE: Promulgated by the Department of Health and Hospitals, Office of Public Health, LR 28:1252 (June 2002), amended LR 38:

Part VII. Dairy Products Regulations

Chapter 1. Milk and Dairy Products

§101. Definitions

A. Unless otherwise specifically provided herein, the following words and terms used in this Part of the Sanitary Code, and all other Parts which are adopted or may be adopted, are defined for the purposes thereof as follows.

* * *

LSPC—Louisiana State Plumbing Code, *i.e.*, Part XIV (Plumbing) of this Code (LAC 51:XIV).

* * *

B. …

AUTHORITY NOTE: The first source of authority for promulgation of the Sanitary Code is R.S. 36:258(B), with more particular provisions found in Chapters 1 and 4 of Title 40. This Part is promulgated in accordance with specific provisions of R.S. 40: 4(A)(1)(a). Also see R.S. 40:5(2)(3)(5)(7) (15)(17) and R.S. 40:922.

HISTORICAL NOTE: Promulgated by the Department of Health and Hospitals, Office of Public Health, LR 28:1258 (June 2002), amended LR 37:2633 (September 2011), LR 38:

Chapter 21. Dairy Products Condensing, Dairy Products Concentrating, Dairy Products Drying or Dry Dairy Products Blending Plants

§2117. Reclaimed Water$_{dp}$

A. - D.2.a. …

b. distribution lines and hose stations are clearly identified in accordance with §607 of the Louisiana State Plumbing Code(LSPC) as limited use reclaimed water$_{dp}$;

D.2.c. - E. …

AUTHORITY NOTE: Promulgated in accordance with the provisions of R.S. 40:4(A)(1)(a). Also see R.S. 40:5(2)(3)(5)(7)(15)(17) and R.S. 40:922.

HISTORICAL NOTE: Promulgated by the Department of Health and Hospitals, Office of Public Health, LR 37:2701 (September 2011), amended LR 38:

Part X. Game Bird and Small Animal Slaughter and Processing

Chapter 1. Required Permits

§101. Definitions [formerly paragraph 10:001]

A. Unless otherwise specifically provided herein, the following words and terms used in this Part of the sanitary code, and all other Parts which are adopted or may be adopted, are defined for the purposes thereof as follows.

* * *

LSPC—Louisiana State Plumbing Code, *i.e.*, Part XIV (Plumbing) of this Code (LAC 51:XIV).

* * *

AUTHORITY NOTE: The first source of authority for promulgation of the sanitary code is in R.S. 36:258.B, with more particular provisions found in Chapters 1 and 4 of Title 40. This Part is promulgated in accordance with specific provisions of R.S. 40: 4.A.(1)(a), (6), (8) and 40:5.(5), (9). Also see R.S. 40:627.

HISTORICAL NOTE: Promulgated by the Department of Health and Hospitals, Office of Public Health, LR 28:1311 (June 2002), amended LR 38:

§113. Building Requirements [formerly paragraph 10:016]

A. - E. …

F. [Formerly paragraph 10:020] Potable water shall be available in all areas of the slaughter house for cleaning and sanitizing utensils and equipment, and for hand washing, as specified in the Louisiana State Plumbing Code (LSPC), particularly Chapter 6 thereof. A heating facility capable of producing hot water for these purposes shall be provided on the premises. Water samples to verify microbiological quality and potability shall be collected from each plant at least annually.

G. - I. …

AUTHORITY NOTE: Promulgated in accordance with the provisions of R.S. 40:4.A(1)(a), (6), (8) and 40:5(5)(9). Also see R.S. 40:627.

HISTORICAL NOTE: Promulgated by the Department of Health and Hospitals, Office of Public Health, LR 28:1313 (June 2002), amended LR 38:

§115. Required Sanitary Facilities
[formerly paragraph 10:024]

A. …

B. [Formerly paragraph 10:025] Toilet facilities shall be provided and installed in accordance with §411 of the LSPC. Facilities shall be conveniently located and shall be accessible to employees at all times.

C. [Formerly paragraph 10:026] Hand washing lavatories shall be provided in food processing and other food handling areas and shall be installed in accordance with §411 of the LSPC. Hand washing lavatories shall be conveniently located and accessible to employees at all times. Hand washing lavatories shall also be located in or immediately adjacent to toilet rooms or vestibules. Sinks used for food preparation or for washing and sanitizing of equipment and utensils shall not be used for hand washing. Each hand-washing lavatory shall be provided with hot and cold water tempered by means of a mixing valve or combination faucet. An ample supply of hand cleansing soap or detergent shall be available at each lavatory. An ample supply of sanitary towels or a hand-drying device providing heated air shall be conveniently located near each hand-washing lavatory. The use of common towels is prohibited. If disposable towels are used, easily cleanable waste receptacles shall be conveniently located near the hand washing facilities.

D.1. …

AUTHORITY NOTE: Promulgated in accordance with the provisions of R.S. 40:4.A(1)(a), (6), (8) and 40:5(5)(9). Also see R.S. 40:627.

HISTORICAL NOTE: Promulgated by the Department of Health and Hospitals, Office of Public Health, LR 28:1313 (June 2002), amended LR 38:

Part XII. Water Supplies

Chapter 1. General

§101. Definitions
[formerly paragraph 12:001]

Editor's Note: The text in this Section will be effective on January 1, 2013.

A. Unless otherwise specifically provided herein, the following words and terms used in this Part of the Sanitary Code, and all other Parts which are adopted or may be adopted, are defined for the purposes thereof as follows.

* * *

Human Consumption—the use of water by humans for drinking, cooking, bathing, showering, hand washing, dishwashing, or maintaining oral hygiene.

* * *

Lead Free—

a. In general.

i. not containing more than 0.2 percent lead when used with respect to solder and flux; and

ii. not more than a weighted average of 0.25 percent lead when used with respect to the wetted surfaces of pipes, pipe fittings, plumbing fittings, and fixtures.

b. Calculation

i. The weighted average lead content of a pipe, pipe fitting, plumbing fitting, or fixture shall be calculated by using the following formula:

(a). For each wetted component, the percentage of lead in the component shall be multiplied by the ratio of the wetted surface area of that component to the total wetted surface area of the entire product to arrive at the weighted percentage of lead of the component. The weighted percentage of lead of each wetted component shall be added together, and the sum of these weighted percentages shall constitute the weighted average lead content of the product. The lead content of the material used to produce wetted components shall be used to determine compliance with Clause "a.ii." above. For lead content of materials that are provided as a range, the maximum content of the range shall be used.

Listed—equipment or materials included in a list published by an approved nationally recognized testing laboratory, inspection agency or other organization concerned with product evaluation that maintains periodic inspection of production of *listed* equipment or materials, and whose listing states either that the equipment or material meets nationally recognized standards or has been tested and found suitable for use in a specified manner. The means for identifying *listed* equipment may vary for each testing laboratory, inspection agency, or other organization concerned with product evaluation, some of which do not recognize equipment as *listed* unless it is also labeled. The water supplier should utilize the system employed by the listing organization to identify a *listed* product.

a. In respect to any solder, flux, pipes, pipe fittings, plumbing fittings, fixtures, and any other appurtenances which are claimed to be lead free, this defined term (listed) shall additionally include the requirement that all such solder, flux, pipes, pipe fittings, plumbing fittings, fixtures, and any other appurtenances have been certified to be lead free by an independent American National Standards Institute (ANSI)-accredited third party testing laboratory, inspection agency or other organization concerned with product evaluation.

* * *

LSPC—Louisiana State Plumbing Code, *i.e.*, Part XIV (Plumbing) of this Code (LAC 51:XIV).

* * *

Person—a natural *person*, his heirs, executors, administrators, or assigns; and includes a firm, partnership, or corporation, it's or their successors or assigns, the state of Louisiana or any of its political subdivisions, the United States government or any of its political subdivisions and any officer, employee and agent of one of those entities. Singular includes plural; male includes female.

Potable Water—water having bacteriological, physical, radiological, and chemical qualities that make it safe and suitable for *human consumption*.

* * *

Water Supplier—a *person* who owns or operates a *water supply system* including, but not limited to, a *person* who owns or operates a *public water system*.

Water Supply System—the system of pipes or other constructed conveyances, structures and facilities through which water is obtained, treated to make it potable (if necessary), and then distributed (with or without charge) for *human consumption* or other use.

* * *

AUTHORITY NOTE: The first source of authority for promulgation of the Sanitary Code is in R.S. 36:258(B), with more particular provisions found in Chapters 1 and 4 of Title 40 of the Louisiana Revised Statutes. This Part is promulgated in accordance with R.S. 36:254 (B)(7), R.S. 40:4 (A)(8), R.S. 40:5 (2)(3)(5)(6)(17)(20), R.S. 40:1148, and R.S. 40:1299.27.1.

HISTORICAL NOTE: Promulgated by the Department of Health and Hospitals, Office of Public Health, LR 28:1318 (June 2002), amended LR 28:2513 (December 2002), LR 30:1194 (June 2004), LR 30:2326 (October 2004), LR 35:484 (March 2009), LR 35:1240 (July 2009), LR 38:

Chapter 3. Water Quality Standards

§335. Distribution

[formerly paragraph 12:012-1]

Editor's Note: The text in this Section will be effective on January 1, 2013.

A. ...

B.1. Any solder or flux which is used in the installation or repair of any public water system or any plumbing in a residential or nonresidential facility providing water for human consumption shall be lead free (i.e., shall not contain more than 0.2 percent lead). Any pipe, pipe fitting, plumbing fitting, fixture, and any other appurtenance which is used in the installation or repair of any public water system or any plumbing in a residential or nonresidential facility providing water for human consumption shall be lead free (i.e., shall not contain more than a weighted average of 0.25 percent lead when used with respect to the wetted surfaces of pipes, pipe fittings, plumbing fittings, fixtures, and any other appurtenances).

2. Exception. The lead free requirement of Paragraph B.1 shall not apply to:

a. leaded joints necessary for the repair of existing cast iron pipes;

b. pipes, pipe fittings, plumbing fittings, fixtures ,and any other appurtenances, including backflow preventers, that are used exclusively for nonpotable services such as manufacturing, industrial processing, irrigation, outdoor watering, or any other uses where the water is not anticipated to be used for human consumption; or,

c. toilets, bidets, urinals, fill valves, flushometer valves, tub fillers, shower valves, service saddles, or water distribution main gate valves that are 2 inches in diameter or larger.

C.1. Water Piping Quality. All potable water pipes, pipe related products and materials that join or seal pipes and pipe related products shall be evaluated and listed as conforming with a national consensus product (or material) standard, ANSI/NSF Standard 61, and NSF/ANSI 372. Any solder or flux which is used in the installation or repair of any public water system or any plumbing in a residential or nonresidential facility providing water for human consumption shall be lead free.

2. Exception. The lead free requirement of Paragraph C.1 shall not apply to:

a. leaded joints necessary for the repair of existing cast iron pipes;

b. pipes, pipe fittings, plumbing fittings, or fixtures, including backflow preventers, that are used exclusively for nonpotable services such as manufacturing, industrial processing, irrigation, outdoor watering, or any other uses where the water is not anticipated to be used for human consumption; or,

c. toilets, bidets, urinals, fill valves, flushometer valves, tub fillers, shower valves, service saddles, or water distribution main gate valves that are 2 inches in diameter or larger.

D. [Formerly paragraph 12:012-3] Where pumps are used to draw water from a water supply distribution system or are placed in a system to increase the line pressure, provision must be made to limit the pressure on the suction side of the pump to not less than 15 psi (pounds per square inch) gauge. Where the use of automatic pressure cut-offs is not possible, such pumps must draw water from a tank, supplied with water from a water distribution system through an air gap as per Part XIV of this Code.

E. [Formerly paragraph 12:012-4] All public water supplies shall be operated and maintained to provide a minimum positive pressure of 15 psi gauge at all service connections at all times.

AUTHORITY NOTE: Promulgated in accordance with the provisions of R.S. 40:4.A(8), R.S. 40:5(5)(6), and R.S. 40:1299.27.1.

HISTORICAL NOTE: Promulgated by the Department of Health and Hospitals, Office of Public Health, LR 28:1325 (June 2002), amended LR 38:

§344. Protection of Water Supply/Containment Practices

A. Each water supplier shall protect the water produced and distributed by its water supply system from potential contamination by ensuring compliance with the containment practices and maintenance/field testing requirements prescribed in LAC 51:XIV.609.F or as otherwise directed by the state health officer. In implementing any ordinances, rules, contracts, polices, or other steps to achieve such compliance, water suppliers shall have the authority to prohibit or discontinue water service to customers who fail to install, maintain, field test, or report the results of the field test for containment assemblies or methods in accordance with LAC 51:XIV.609.F.9.

AUTHORITY NOTE: Promulgated in accordance with the provisions of R.S. 40:4.A(7)(8) and 40:5(5)(6)(17)(20).

HISTORICAL NOTE: Promulgated by the Department of Health and Hospitals, Office of Public Health, LR 38:

§371. Public Drinking Fountains

[formerly paragraph 12:023-1]

A. All public drinking fountains shall be designed and constructed in accordance with the provisions of the Louisiana State Plumbing Code (LSPC). Drinking fountains and coolers shall be constructed of lead free materials as specified in §335.B of this Part.

B. - D. …

AUTHORITY NOTE: Promulgated in accordance with the provisions of R.S. 40:4.A(7)(8) and 40:5(5)(6).

HISTORICAL NOTE: Promulgated by the Department of Health and Hospitals, Office of Public Health, LR 28:1328 (June 2002), amended LR 38:

Part XIV. Plumbing

Chapter 1. Administration

Subchapter A. General

§101. Title and Adoption of Louisiana State Plumbing Code (LSPC)

[formerly paragraph 14:001]

A. The Department of Health and Hospitals, Office of Public Health hereby adopts Part XIV (Plumbing) of the

Sanitary Code, State of Louisiana (LAC 51:XIV). "Part XIV (Plumbing) of the Sanitary Code, State of Louisiana" may be cited as the "Louisiana State Plumbing Code", hereinafter referred to as "this code" or "this Part". Any reference or citation to the "Louisiana State Plumbing Code" shall likewise be synonymous to any reference or citation to "Part XIV (Plumbing) of the Sanitary Code, State of Louisiana."

AUTHORITY NOTE: The first source of authority for promulgation of the sanitary code is in R.S. 36:258(B), with more particular provisions found in Chapters 1 and 4 of Title 40 of the Louisiana Revised Statutes. This Part is promulgated in accordance with R.S. 40:4(A)(7) and R.S. 40:5(2)(3)(7)(9)(16)(17)(20).

HISTORICAL NOTE: Promulgated by the Department of Health and Human Resources, Office of Health Services and Environmental Quality, LR 10:210 (March 1984), amended by the Department of Health and Hospitals, Office of Public Health, LR 18:618 (June 1992), LR 26:1481 (July 2000), repromulgated LR 28:1383 (June 2002), amended LR 38:

§103. Availability
[formerly paragraph 14:002]

A. Information concerning purchasing copies of this Part (LAC 51:XIV) may be obtained by contacting the Office of the State Register, P.O. Box 94095, Baton Rouge, LA 70804-9095, tel (225) 342-7000 or (800) 354-9548 (toll free) or fax (225) 342-1057. This Part is available to be viewed electronically on the Office of the State Register's website at: http://www.doa.louisiana.gov/osr/osr.htm.

AUTHORITY NOTE: Promulgated in accordance with R.S. 40:4(A)(7) and R.S. 40:5(2)(3)(7)(9)(16)(17)(20).

HISTORICAL NOTE: Promulgated by the Department of Health and Human Resources, Office of Health Services and Environmental Quality, LR 10:210 (March 1984), amended by the Department of Health and Hospitals, Office of Public Health, LR 18:618 (June 1992), LR 26:1481 (July 2000), repromulgated LR 28:1383 (June 2002), amended LR 38:

§105. Effective Date and Edition
[formerly paragraph 14:003]

A. Other than those specific portions of this Part pertaining to the implementation of Act No. 362 of the 2011 Regular Session, the remainder of this Part shall become effective on *[the date which is 3 months after the date of promulgation in the Louisiana Register as a final rule]*. Furthermore, the year in which this code becomes effective shall be used to indicate the edition. (For example, if this code becomes effective in calendar year 2013, then the document may be referred to as the Louisiana State Plumbing Code, 2013 Edition.)

AUTHORITY NOTE: Promulgated in accordance with R.S. 40:4(A)(7) and R.S. 40:5(2)(3)(7)(9)(16)(17)(20).

HISTORICAL NOTE: Promulgated by the Department of Health and Human Resources, Office of Health Services and Environmental Quality, LR 10:210 (March 1984), amended by the Department of Health and Hospitals, Office of Public Health, LR 18:618 (June 1992), LR 26:1482 (July 2000), repromulgated LR 28:1383 (June 2002), amended LR 38:

Subchapter B. Purpose and Scope

§107. Purpose
[formerly paragraph 14:004]

A. The purpose of this Chapter is to provide for the administration and enforcement of this code.

AUTHORITY NOTE: Promulgated in accordance with R.S. 40:4(A)(7) and R.S. 40:5(2)(3)(7)(9)(16)(17)(20).

HISTORICAL NOTE: Promulgated by the Department of Health and Human Resources, Office of Health Services and Environmental Quality, LR 10:210 (March 1984), amended by the Department of Health and Hospitals, Office of Public Health, LR 18:618 (June 1992), LR 26:1482 (July 2000), repromulgated LR 28:1383 (June 2002), amended LR 38:

§109. Code Remedial

A. General. This code is hereby declared to be remedial, and shall be construed to secure the beneficial interests and purposes thereof-which are public safety, health and general welfare-by regulating the installation and maintenance of all plumbing.

B. Quality Control. Quality control of materials and workmanship is not within the purview of this code except as it relates to the purpose stated herein.

C. Permitting and Inspection. The inspection or permitting of any building or plan by any jurisdiction, under the requirements of this code shall not be construed in any court as a warranty of the physical condition of such building or the adequacy of such plan. No jurisdiction or any employee thereof shall be liable in tort for damages for any defect or hazardous or illegal condition or inadequacy in such building or plan, nor for any failure of any component of such building, which may occur subsequent to such inspection or permitting.

AUTHORITY NOTE: Promulgated in accordance with R.S. 40:4(A)(7) and R.S. 40:5(2)(3)(7)(9)(16)(17)(20).

HISTORICAL NOTE: Promulgated by the Department of Health and Hospitals, Office of Public Health, LR 38:

§111. Scope

A. Applicability. The provisions of this code shall apply to every plumbing installation, including alterations, repairs, replacement, equipment, appliances, fixtures, fittings and appurtenances.

B. Federal and State Authority. The provisions of this code shall not be held to deprive any federal or state agency, or any applicable governing authority having jurisdiction, of any power or authority which it had on the effective date of the adoption of this code or of any remedy then existing for the enforcement of its orders, nor shall it deprive any individual or corporation of its legal rights provided by law.

C. Appendices. The appendices included in this code are not intended for enforcement unless specifically referenced in the code text, stated in the appendix or specifically included in the adopting ordinance or promulgated regulations.

D. Referenced Standards. Standards referenced in this code shall be considered an integral part of this code without separate adoption. If specific portions of a standard are denoted by code text, only those portions of the standard shall be enforced. Where code provisions conflict with a standard, the code provisions shall be enforced Permissive and advisory provisions in a standard shall not be construed as mandatory.

E. Maintenance. All plumbing systems, both existing and new, and all parts thereof, shall be maintained in a safe and sanitary condition. All devices or safeguards which are required by this code when constructed, altered, or repaired, shall be maintained in good working order. The owner, or his designated agent, shall be responsible for the maintenance of the plumbing system.

AUTHORITY NOTE: Promulgated in accordance with R.S. 40:4(A)(7) and R.S. 40:5(2)(3)(7)(9)(16)(17)(20).

HISTORICAL NOTE: Promulgated by the Department of Health and Hospitals, Office of Public Health, LR 38:

§113. Existing Buildings

A. General. Alterations, repairs or rehabilitation work may be made to any existing plumbing installations without requiring the installations to comply with all the requirements of this code provided that the alteration, repair or rehabilitation work conforms to the requirements of this code for new construction. The plumbing official shall determine the extent to which the existing plumbing installation shall be made to conform to the requirements of this code for new construction.

B. Change of Occupancy Classification. If the occupancy classification of an existing building is changed, the plumbing installation shall be made to comply with this code.

C. Substantial Renovation. If substantial renovation of an existing building or facility is done, the plumbing installation shall be made to comply with this Part.

D. Exemptions from Code for Buildings or Facilities which had Either been Previously Permitted, Licensed or Specifically Approved by the State Health Officer. In accord with LAC 51:I.123 and unless otherwise specifically provided hereinafter, when the construction of buildings and facilities which had either been previously permitted, licensed or specifically approved by the state health officer pursuant to Public Health—Sanitary Code (LAC 51) requirements then in effect, upgrading of such buildings and facilities shall not be required except where:

1. substantial renovation of such buildings or facilities is undertaken; or

2. the ownership thereof or the business located therein changes subsequent to the effective date of this code; or,

a. The text, or a portion thereof, contained in Paragraph D.2 does not apply when any particular provision of this code allows an exception to such requirement (e.g., see LAC 51:XIV.411.A.1.a.). The non-applicable text, or portion thereof, of Paragraph D.2 is limited to what is allowed under the specific exception thereto.

3. a serious health threat exists as determined by the state health officer.

AUTHORITY NOTE: Promulgated in accordance with R.S. 40:4(A)(7) and R.S. 40:5(2)(3)(7)(9)(16)(17)(20).

HISTORICAL NOTE: Promulgated by the Department of Health and Hospitals, Office of Public Health, LR 38:

§115. Special Historic Buildings

A. The provisions of this code relating to the installation, alteration, repair, enlargement, restoration, replacement or relocation of plumbing installations shall not be mandatory for existing buildings or structures identified and classified by the federal, state or local jurisdiction as special historic buildings when such installations are judged by the plumbing official to be safe and in the public interest of health, safety and welfare regarding any proposed installation, alteration, repair, enlargement, restoration, relocation or replacement.

AUTHORITY NOTE: Promulgated in accordance with R.S. 40:4(A)(7) and R.S. 40:5(2)(3)(7)(9)(16)(17)(20).

HISTORICAL NOTE: Promulgated by the Department of Health and Hospitals, Office of Public Health, LR 38:

Subchapter C. Powers and Duties of the Plumbing Official

§117. Authority

A. Pursuant to R.S. 40:4.A(7) the state health officer is required to promulgate this code and pursuant to R.S. 40:5(3) the state health officer has the authority to enforce this code. Any enforcement action by the state health officer shall be in accordance with Part I of the Sanitary Code, State of Louisiana (LAC 51:I), and/or applicable state laws.

AUTHORITY NOTE: Promulgated in accordance with R.S. 40:4(A)(7) and R.S. 40:5(2)(3)(7)(9)(16)(17)(20).

HISTORICAL NOTE: Promulgated by the Department of Health and Hospitals, Office of Public Health, LR 38:

§119. Right of Entry

A. Whenever necessary to make an inspection to enforce any of the provisions of this code, or whenever the plumbing official has reasonable cause to believe that there exists in any building or upon any premises any condition or code violation which makes such building or premises unsafe, dangerous or hazardous, the plumbing official may enter such building or premises at all reasonable times to inspect the same or to perform any duty imposed upon the plumbing official by this code, provided that if such building or premises is occupied, he shall first present proper credentials and request entry. If such building or premises is unoccupied, he shall first make a reasonable effort to locate the owner or other persons having charge or control of the building or premises and request entry. If such entry is refused, the plumbing official shall have recourse to every remedy provided by law to secure entry.

B. When the plumbing official shall have first obtained a proper inspection warrant or other remedy provided by law to secure entry, no owner or occupant or any other persons having charge, care or control of any building of premises shall fail or neglect after proper request is made as herein provided, to promptly permit entry therein by the plumbing official for the purpose of inspection and examination pursuant to this code.

AUTHORITY NOTE: Promulgated in accordance with R.S. 40:4(A)(7) and R.S. 40:5(2)(3)(7)(9)(16)(17)(20).

HISTORICAL NOTE: Promulgated by the Department of Health and Hospitals, Office of Public Health, LR 38:

§121. Enforcement

A. Upon determination that any plumbing system is in violation of, or not in conformity with, the provisions of this code, the plumbing official may initiate enforcement action in accordance with applicable laws, regulations and/or ordinances.

AUTHORITY NOTE: Promulgated in accordance with R.S. 40:4(A)(7) and R.S. 40:5(2)(3)(7)(9)(16)(17)(20).

HISTORICAL NOTE: Promulgated by the Department of Health and Hospitals, Office of Public Health, LR 38:

§123. Revocation of Permits or Approvals

A. Misrepresentation of Application. The plumbing official may revoke a permit or approval, issued under the provisions of this code, in case there has been any false statement or misrepresentation as to the material fact in the application or plans on which the permit or approval was based.

B. Violation of Code Provisions. The plumbing official may revoke a permit or approval upon determination by the plumbing official that the installation, erection, alteration or repair of the plumbing installation for which the permit or approval was issued is in violation of or not in conformity with, the provisions of this code.

AUTHORITY NOTE: Promulgated in accordance with R.S. 40:4(A)(7) and R.S. 40:5(2)(3)(7)(9)(16)(17)(20).

HISTORICAL NOTE: Promulgated by the Department of Health and Hospitals, Office of Public Health, LR 38:

§125. Unsafe Installations

A. All plumbing installations regardless of type, which are unsafe or which constitute a hazard to human life, health or welfare are hereby declared illegal and shall be abated by repair and rehabilitation or by demolition.

AUTHORITY NOTE: Promulgated in accordance with R.S. 40:4(A)(7) and R.S. 40:5(2)(3)(7)(9)(16)(17)(20).

HISTORICAL NOTE: Promulgated by the Department of Health and Hospitals, Office of Public Health, LR 38:

§127. Requirements Not Covered By Code

A. Any requirements necessary for the strength or stability of an existing or proposed plumbing installation, or for the public safety, health and general welfare, not specifically covered by this code, shall be determined by the plumbing official.

AUTHORITY NOTE: Promulgated in accordance with R.S. 40:4(A)(7) and R.S. 40:5(2)(3)(7)(9)(16)(17)(20).

HISTORICAL NOTE: Promulgated by the Department of Health and Hospitals, Office of Public Health, LR 38:

§129. Alternate Materials and Methods of Construction

A. The provisions of this code are not intended to prevent the use of any material or method of construction not specifically prescribed by this code, provided any such alternate has been approved by the plumbing official. The plumbing official shall approve any such alternate provided he finds that the alternate for the purpose intended is at least the equivalent of that prescribed in this code in quality, strength, effectiveness, durability and safety. The plumbing official shall require that sufficient evidence or proof be submitted to substantiate any claim made regarding its use.

AUTHORITY NOTE: Promulgated in accordance with R.S. 40:4(A)(7) and R.S. 40:5(2)(3)(7)(9)(16)(17)(20).

HISTORICAL NOTE: Promulgated by the Department of Health and Hospitals, Office of Public Health, LR 38:

§131. Permits

A. A person, firm or corporation shall not install, enlarge, alter, repair, improve, remove, convert or replace any plumbing work, or cause the same to be done, without first obtaining a plumbing permit (where such permits are required by state, parish, city or other local laws or ordinances) from the plumbing official. Where such permits are not available, the property owner, contractor and installer shall be jointly responsible for the installation being in compliance with the requirements of this code.

AUTHORITY NOTE: Promulgated in accordance with R.S. 40:4(A)(7) and R.S. 40:5(2)(3)(7)(9)(16)(17)(20).

HISTORICAL NOTE: Promulgated by the Department of Health and Hospitals, Office of Public Health, LR 38:

§133. Tests

A. The plumbing official may require tests or test reports as proof of compliance. Required tests are to be made at the expense of the owner or his agent, by an approved testing laboratory or other approved agency.

AUTHORITY NOTE: Promulgated in accordance with R.S. 40:4(A)(7) and R.S. 40:5(2)(3)(7)(9)(16)(17)(20).

HISTORICAL NOTE: Promulgated by the Department of Health and Hospitals, Office of Public Health, LR 38:

§135. Variances

A. The plumbing official has the authority and discretion to issue a written variance concerning the application of any provision of this code in any particular case when, in his/her opinion based upon the extenuating circumstances presented, it is determined that the health and safety of the public will not be jeopardized.

NOTE: Refer to Section 203 for the definition of "plumbing official" and "state health officer". Per these definitions, variances to the requirements of this code may be legally issued only by the state health officer acting personally or by certain individuals that the state health officer personally designates. Once a variance has been issued by the state health officer acting in his capacity as the co-State plumbing official, the co-local plumbing official is not necessarily obliged to agree with the granting of such variance. In accordance with R.S. 40:14, the co-Local plumbing official may decide to deny the request for variance at the local level since local plumbing regulations are allowed to be stricter than state plumbing regulations.

AUTHORITY NOTE: Promulgated in accordance with R.S. 40:4(A)(7) and R.S. 40:5(2)(3)(7)(9)(16)(17)(20).

HISTORICAL NOTE: Promulgated by the Department of Health and Hospitals, Office of Public Health, LR 38:

§137. Violations and Penalties

A. Any person, firm, corporation or agent; contractor; and/or installer who violates a provision of this code shall be subject to enforcement action by the plumbing official in accordance with applicable laws, regulations and/or ordinances.

AUTHORITY NOTE: Promulgated in accordance with R.S. 40:4(A)(7) and R.S. 40:5(2)(3)(7)(9)(16)(17)(20).

HISTORICAL NOTE: Promulgated by the Department of Health and Hospitals, Office of Public Health, LR 38:

§139. Severability

A. If any Section, Subsection, Paragraph, Subparagraph, Clause, Subclause, Division, Sentence, or phrase of this Part is for any reason held to be unconstitutional, such decision shall not affect the validity of the remaining portions of this Part.

AUTHORITY NOTE: Promulgated in accordance with R.S. 40:4(A)(7) and R.S. 40:5(2)(3)(7)(9)(16)(17)(20).

HISTORICAL NOTE: Promulgated by the Department of Health and Hospitals, Office of Public Health, LR 38:

Chapter 2. Definitions

Subchapter A. General

§201. General

A. Scope. For the purpose of this Part, certain abbreviations, terms, phrases, words and their derivatives shall be construed as set forth in this Chapter or the Chapter to which they are unique.

B. Tense, Gender, and Number. Words used in the present tense include the future. Words in the masculine gender include the feminine and neuter. Words in the feminine and neuter gender include the masculine. The singular number includes the plural and the plural number includes the singular.

C. Words Not Defined. Words not defined herein shall have the meanings stated in the other Chapters of this Part or in other Parts of the Louisiana State Sanitary Code (LAC 51) which are adopted or may be adopted, the codes adopted under the authority of Act 12 of the 2005 First Extraordinary

Session, or the American Society of Sanitary Engineering (ASSE) Plumbing Dictionary, Fourth Edition (1988). When words not defined herein are defined in both the Louisiana State Sanitary Code (LAC 51) and in the codes adopted under the authority of Act 12 of the 2005 First Extraordinary Session or in the ASSE's Plumbing Dictionary, Fourth Edition (1988), the definition contained within the Louisiana State Sanitary Code (LAC 51) shall be given preference as it pertains to health and/or health standards. Words not defined in any of these source documents shall have their common usage and meaning as stated in the Merriam-Webster's Collegiate Dictionary-Eleventh Edition, as revised, and other similarly accepted reference texts.

AUTHORITY NOTE: Promulgated in accordance with R.S. 40:4(A)(7) and R.S. 40:5(2)(3)(7)(9)(16)(17)(20).

HISTORICAL NOTE: Promulgated by the Department of Health and Hospitals, Office of Public Health, LR 38:

Subchapter B. Definition of Terms

§203. Definition of Terms

Editor's Note: The text in this Section will be effective on January 1, 2013.

A. Unless otherwise specifically provided herein, the following words and terms used in this Part of the Sanitary Code (LAC 51:XIV) are defined for the purposes thereof as follows.

Access Cover—a removable plate, usually secured by bolts or screws, to permit access to a pipe or pipe fitting for the purposes of inspection, repair or cleaning.

Accessible—having access to but which first may require the removal of a panel, door or similar covering of the item described. See *Readily Accessible*.

Administrative Authority—see *Plumbing Official*.

Air Break (Drainage System)—a piping arrangement in which a *drain* from a fixture, device, appliance or apparatus discharges indirectly into a sink or other receptor with the *indirect waste pipe* terminating at a point below the *flood-level rim* of the receiving sink or other receptor. An unobstructed horizontal distance of free atmosphere between the outside of the *indirect waste pipe* and the inside of the receiving sink or other receptor must exist so as to allow a *back-flow* of *sewage* to spill over the *flood-level rim* of the receiving sink or other receptor to prevent such *back-flow* from reaching the fixture, device, appliance or apparatus served by the *indirect waste pipe*.

Air Gap (Drainage System)—the unobstructed vertical distance through the free atmosphere between the outlet waste pipe and the *flood-level rim* of the receptacle into which it is discharging.

Air Gap (Water Distribution)—in a *water supply or distribution system*, the unobstructed vertical distance through the free atmosphere between the lowest opening from any pipe or faucet supplying water to a tank, *plumbing fixture* or other device and the *flood-level rim* of the receptacle.

Alternate Designed Plumbing System—a type of *plumbing system* which is not designed in accord with the prescriptive requirements of this Part. See Chapter 12 for special review and approval requirements prior to construction.

Anchors—see *supports*.

And/Or—in a choice of two code provisions, signifies that use of both provisions will satisfy the code requirement and use of either provision is acceptable also.

Anti-Scald Valve—see *scald preventative valve*.

Appurtenance—see Plumbing Appurtenance.

Approved—approved by the *plumbing official* or other authority having jurisdiction.

Area Drain—a receptacle designed to collect surface or rain water from an open area.

Assembly or Assembly Use—in the classification of *plumbing fixtures*, *assembly* applies to *fixtures* used by the *public* attending an event at a theatre, auditorium, stadium, arena, gymnasium or similar facility. See the theaters, auditoriums, stadiums, arenas, and gymnasiums occupancy classification listed in Table 411 of this code.

Automatic Compensating Type Shower Valve—One of three types of valves that compensate for changes in incoming pressure, temperature, or pressure and temperature. The three types of valves are:

a. *Pressure Balancing Type Shower Valve*—a pressure balancing valve (Type P) which senses incoming hot and cold water pressures and compensates for fluctuations in either hot or cold water to stabilize the outlet temperature.

b. *Thermostatic Type Shower Valve*—a thermostatic balancing valve (Type T) which senses outlet temperature and compensates for fluctuations in either incoming hot and cold water temperatures and/or pressure to stabilize the outlet temperature.

c. *Combination Thermostatic and Pressure Balancing Type Shower Valve*—a combination thermostatic/pressure balancing valve (Type TP) which senses outlet temperature and incoming hot and cold water pressure and compensates for fluctuations in incoming hot and cold water temperatures and/or pressures to stabilize the outlet temperature.

Backflow—the flow of water or other liquids, mixtures, or substances into the distribution pipes of a potable *water supply system* and/or *water distribution system* from any source or sources other than its intended source.

Backflow Connection—any arrangement whereby *backflow* can occur.

Backflow Preventer—a mechanical device which prevents *backflow* of contaminants and pollutants into the potable water supply or distribution system by means of positive check members in addition to atmospheric ports.

Backflow Prevention Assembly—a testable *backflow preventer* which comes assembled from the manufacturer as a complete unit having approved test cocks with shut off valves installed on both the inlet and outlet sides of the *backflow preventer*.

Back Vent—see *individual vent*.

Back Water Valve—a device (check valve) installed in a *drain* or pit or in the sewer or *drainage system* to prevent *sewage* or drainage from backing into low levels through fixtures or devices not installed sufficiently above sewer or *drainage systems*.

Battery of Fixtures—any group of two or more similar adjacent fixtures which discharge into a common horizontal waste or soil branch.

Battery Venting—the horizontal wet venting of a number of individual *fixture drains*, connected horizontally to a *branch soil* or *waste pipe* which is circuit or loop vented.

Beneficial Use—the technologically feasible uses of *reclaimed water* for domestic, municipal, industrial, agricultural, recreational or therapeutic purposes.

Boiler Blow Off—an outlet on a boiler to permit emptying or discharge of sediment.

Branch—any part of the piping system other than a *main*, *riser*, or *stack*.

Branch, Fixture—see *fixture branch*.

Branch, Horizontal—see *horizontal branch*.

Branch Interval—a length of soil or waste stack corresponding in general to a story height, but in no case less than 8 feet (ft) (2438 mm), within which the *horizontal branches* from one floor or story of a building are connected to the *stack*.

Branch Vent—a vent connecting one or more individual vents with a vent stack or stack vent.

Building—any structure built, erected, and framed of component structural parts designed for the housing, shelter, enclosure, or support of persons, animals, or property of any kind.

Building Drain—that part of the lowest piping of a *drainage system* which receives the discharge from *soil pipes* and *waste pipes* inside the walls of the *building* and conveys it to the *building sewer* 3 ft (914 mm) outside the *building* wall.

Building Sewer—that part of the horizontal piping of a *drainage system* which extends from the ends of the *building drain* and which receives the discharge of the *building drain* and conveys it to:

a. the lateral or main of a community sewerage system;

b. the inlet connection of the primary treatment device of either an individual sewerage system or a commercial treatment facility; or,

c. any other point of sewage disposal.

Building Storm Drain—a *building drain* used for conveying rain water, surface water, ground water, subsurface water, condensate, cooling water or other similar discharge to a *building storm sewer*, extending to a point not less than 3 ft (914 mm) outside the building wall.

Building (House) Storm Sewer—the extension from the building storm drain to the public storm sewer or other point of disposal.

Building (House) Subdrain—that portion of a drainage system which cannot drain by gravity into the building storm sewer.

Building (House) Trap—a device, fitting, or assembly of fittings installed in the *building drain* to prevent circulation of air between the *drainage system* of the *building* and the *building sewer*.

Circuit Vent—a *branch vent* that serves two or more *traps* and extends from immediately downstream of the uppermost *fixture connection* of a *horizontal branch* to the *vent stack*.

Code—generally, refers to Part XIV (Plumbing) of the Sanitary Code, state of Louisiana which may be cited as the "Louisiana State Plumbing Code", herein referred to as "this code" or "this Part". Any reference or citation to the Louisiana State Plumbing Code shall likewise be synonymous to any reference or citation to Part XIV (Plumbing) of the Sanitary Code, State of Louisiana. In certain instances, use of this term (*code)* may refer to the entire Louisiana State Sanitary Code (LAC 51) or to certain other Parts of the State Sanitary Code besides Part XIV.

Combination Fixture—a fixture combining one sink and tray or a two or three-compartment sink and/or tray in one unit.

Combination Waste and Vent System—an alternate designed plumbing system of waste piping embodying the horizontal wet venting of one or more sinks, dishwashers, floor sinks, indirect waste receptors, floor drains, or similar applications where the fixtures are not adjacent to walls or partitions. It consists of an enlarged diameter horizontal waste pipe which has been adequately sized to provide for the free movement of air above the flow line of the drain to ensure an adequate vent system. In this non-conventional or non-prescriptive plumbing system [which requires special approval from the state health officer prior to construction (see Chapter 12)], each trap of each plumbing fixture does not contain an individual vent. This system is different from battery venting in that it is not necessarily constrained by all of the limits prescribed under the battery venting requirements.

Commercial—more suitable for a business or industrial use rather than a *domestic* use. Floor drains, floor sinks, curbed cleaning facilities (with floor drain), hub drains, and commercial dishwashing machines (used in restaurants, for example) are considered *commercial*.

Commercial Treatment Facility—any sewage treatment facility (designed in accordance with LAC 51:XIII.503) which is required by the state health officer whenever the use of an individual sewerage system is unfeasible or not authorized.

Common Vent—a vent connecting at the junction of two *fixture drains* and serving as a vent for both fixtures.

Community Sewerage System—any sewerage system which serves multiple connections and consists of a collection and/or pumping/transport system and sewage treatment facility.

Conductor—see *leader*.

Continuous Vent—a vertical vent that is a continuation of the *drain* to which it connects.

Continuous Waste—a *drain* from two or three fixtures connected to a single *trap*.

Critical Level—the minimum elevation above the *flood-level rim* of the fixture or receptacle served at which a *backflow preventer* device may be installed. The *critical level* marking on a *backflow preventer* device, including but not limited to a *vacuum breaker*, is normally a horizontal line usually stamped on the device by the manufacturer, the location of which has been established by the manufacturer to conform the device to an accepted standard with the goal of having an approved installation of the device to ensure the proper functioning of the device for cross connection control protection purposes. When a *backflow preventer* device does not bear a *critical level* marking, the bottom of the *vacuum breaker*, combination valve or the bottom of any approved *backflow preventer* device shall constitute the *critical level*.

Cross Connection—any physical connection or arrangement between two otherwise separate piping systems, one of which contains *potable water* and the other, water of

unknown or questionable safety, whereby water may flow from one system to the other, the direction of flow depending on the pressure differential between the two systems. See *backflow* and *back-siphonage*.

Crown of Trap—the topmost point of the inside of a *trap's* outlet.

Dead End—a *branch* leading from a *soil*, *waste*, or *vent pipe*, *building drain*, or *building sewer*, which is terminated at a *developed length* of 2 ft (610 mm) or more by means of a plug or other closed fitting.

Depth of Water Seal—the depth of water which would have to be removed from a fully charged *trap* before air could pass through the *trap*.

Developed Length—the length of a pipe along the center line of the pipe and fittings.

Diameter—the nominal diameter as designated commercially, unless otherwise stated.

Domestic—associated with service to mankind and the activities of his home or *private* residence, the household, household affairs, the family, guest rooms of hotels and motels, and patient rooms of hospital and nursing homes and guest rooms of similar institutions. Water for and *liquid waste* from lavatories, water closets, tubs and showers, kitchens, sinks, and home laundries are considered domestic.

Double Offset—two changes of direction installed in succession or series in continuous pipe.

Downspout—see Leader.

Drain—any waste pipe or soil pipe which carries *waste* water or waterborne *wastes* in a building *drainage system*.

Drainage Piping—see Drainage System.

Drainage System—all the piping within *public* or *private* premises, which conveys *sewage*, rain water, or other liquid wastes to a legal point of disposal, but not including:

a. the laterals or mains of a community sewerage system;

b. any *individual sewerage system* or *commercial treatment facility (*beginning at the inlet connection of the primary treatment device and any parts downstream); or,

c. any *sewage* treatment or disposal plant for any *community sewerage system*.

Durham System—a term used to describe *soil* or *waste* pipe systems where all piping is of threaded pipe, tubing, or other such rigid construction, using recessed drainage fittings to correspond to the types of piping.

Effective Opening—

a. the minimum cross-sectional area of the *water outlet* at the point of water supply discharge or the minimum cross-sectional area of the *liquid waste* outlet at the point of *indirect waste pipe* discharge, measured or expressed in terms of:

i. diameter of a circle; or,

ii. if the outlet is not circular, the diameter of a circle of equivalent cross-sectional area.

b. This term is applicable to and mainly used when determining the minimum unobstructed vertical distance through the free atmosphere {*air gap (water distribution)*} required between the *water outlet* and the *flood rim level* of the *fixture* or receptacle into which it is discharging. This term may also be applicable when determining the minimum unobstructed vertical distance through the free atmosphere {*air gap (drainage system)*} required between a *liquid waste* outlet of an *indirect waste pipe* and the *flood rim level* of the *indirect waste receptor*.

Existing Work—a *plumbing system* or any part thereof which has been installed prior to the effective date of this Part.

Fixture—see Plumbing Fixtures.

Fixture Branch—a water supply pipe between the *fixture supply* and a *main*.

Fixture Drain—the *drain* from the *trap* of a fixture to the junction of that *drain* with any other *drain* pipe.

Fixture Supply—a water supply pipe or flexible connector that connects a fixture to a *fixture branch*.

Fixture Tail Piece or Connection—a pipe or other connection located between a *fixture* and its *trap*.

Fixture Unit—a quantity in terms of which the load-producing effects on the *plumbing system* of different kinds of *plumbing fixtures* are expressed on some arbitrarily chosen scale. The value assigned for a particular *plumbing fixture* represents the degree to which it expected to load a *plumbing system* when it is used at the maximum assumed frequency.

Fixture Unit Flow Rate—the total discharge flow in gallons per minute of a single *fixture* divided by 7.5 (gal/ft^3) which provides the flow rate of that particular *plumbing fixture* as a unit of flow. *Fixtures* are rated as multiples of this unit of flow. (One gallon per minute equals 0.0631 liters per second.)

Flood-Level Rim—the top edge of the receptacle from which water overflows.

Floor Drain—a *plumbing fixture* for recess in the floor having a floor level strainer intended for the purposes of the collection and disposal of *waste* water used in cleaning the floor and for the collection and disposal of accidental spillage to the floor. This definition does not include *floor sinks* and *indirect waste receptors*.

Floor Sink—a type of *indirect waste receptor* installed as a floor level sink and designed with a removable basket strainer or beehive strainer for the purpose of receiving the discharge from *indirect waste pipes* only. This classification does not include *floor drains* with floor level strainers only but may include 3-inch (76 mm) drains with floor level strainers which incorporate funnel drains as an integral part thereof.

Flush Tank—a tank located above or integral with water closets, urinals, or similar fixtures for the purpose of flushing the usable portion of the *fixture*. Other than normal atmospheric pressure, the water in the tank is not stored under any other external pressure and the water released from the tank is considered a gravity flush.

Flush Valves—a device located at the bottom of the *flush tank* for the purpose of flushing water closets and similar *fixtures*.

Flushometer Tank—a device integrated within an air accumulation vessel which is designed to discharge a predetermined quantity of water (which has been stored under pressure) to *fixtures* for flushing purposes.

Flushometer Valve—a device which discharges a predetermined quantity of water to *fixtures* for flushing purposes and is actuated by direct water line pressure.

Frostproof Closet—a hopper that has no water in the bowl and has the *trap* and the control valve for its water supply installed below the frost line.

Gang Shower—two or more showers in a common area within an institutional building.

Grade$_{(G)}$—normally, this references the location of some object in relation to either the floor or ground level elevation.

Grade$_{(L)}$—level of achievement attained in school.

Grade$_{(Q)}$—a classification or standard of quality of some object or material.

Grade$_{(S)}$—the vertical slope (or vertical rise or fall) of a line of pipe in reference to a horizontal plane. In drainage, it is usually expressed as the fall in a fraction of an inch per foot length of pipe or by stating the fall as a percentage of the horizontal distance.

Grease Interceptor—an *interceptor* of less than 125 gallon capacity which is designed and installed so as to separate and retain grease and which is generally installed indoors entirely above *grade$_{(G)}$*.

Grease Trap—an *interceptor* of at least 125 gallon capacity which is designed and installed so as to separate and retain grease and which is generally installed below *grade$_{(G)}$* outdoors with provisions for above *grade$_{(G)}$* accessibility for cleaning purposes.

Hangers—see *supports*.

Horizontal Branch—a *drain* pipe extending laterally from a soil or waste stack or *building drain*, with or without vertical sections or branches, which receives the discharge from one or more *fixture drains* and conducts it to the soil or waste stack or to the *building drain*.

Horizontal Pipe—any pipe or fitting which makes an angle of more than 45 degrees (0.785 rad) with the vertical.

House Drain—see *building drain*.

House Sewer—see *building sewer*.

House Trap—see *building (house) trap*.

Human Consumption—the use of water by humans for drinking, cooking, bathing, showering, hand washing, dishwashing, or maintaining oral hygiene.

Indirect Waste Receptor—a *plumbing fixture* designed specifically to collect and dispose of *liquid waste* received from an *indirect waste pipe* which is connected to other *plumbing fixtures*, plumbing equipment or appliances which are required to discharge to the *drainage system* through either an *air gap (drainage system)* or *air break (drainage system)*. The following type fixtures fall within the classification of *indirect waste receptors*: *floor sinks*, curbed cleaning facilities with floor drain, and standpipe drains with integral *air gaps (drainage system)* or *air breaks (drainage system)*, and may include others when approved as such by the *plumbing official*.

Indirect Waste Pipe—a pipe that does not connect directly with the *drainage system* but conveys *liquid wastes* and then discharges such liquid wastes into an *indirect waste receptor* which is directly connected to the *drainage system*.

Individual Sewerage System—any system of piping (excluding the *building drain* and *building sewer*), and/or collection and/or transport system which serves one or more connections, and/or pumping facility, and treatment facility, all located on the property where the *sewage* originates; and which utilizes the *individual sewerage system* technology which is set forth in LAC 51:XIII.Chapter 7.Subchapter B, or a *commercial treatment facility* which is specifically authorized for use by the *state health officer*.

Individual Vent—a pipe installed to vent an individual *fixture trap* and which connects with the *vent system* above the *fixture* served or terminates in the open air.

Industrial Wastes—*liquid wastes* resulting from the processes employed in industrial establishments and free of fecal matter.

Insanitary—as opposed to *sanitary*; deficient in sanitation; unclean to a degree to be injurious to health; careless or dangerous hygienic conditions; contrary to *sanitary* principles.

Interceptor—an automatic or manual device designed and installed to separate and retain deleterious, hazardous, detrimental, damaging, or undesirable matter from normal wastes for proper disposal, rendering or recycling, and also permits normal *sewage* and *liquid wastes* to discharge into the disposal terminal by gravity.

Journeyman Plumber—a natural *person* who possesses the necessary qualifications and knowledge to install, alter and/or repair *plumbing systems*; is licensed as such by the State Plumbing Board of Louisiana; is supervised by a *master plumber* and is in the employ of an employing entity. [see R.S. 37:1377(B)]

LAC—*Louisiana Administrative Code*.

Laundry Tray—typically, a large and deep 1 or 2 compartment sink used to wash and rinse laundry.

Leader—the water conductor (downspout) from the roof to the building storm drain or other means of disposal.

Lead Free—

a. in general:

i. not containing more than 0.2 percent lead when used with respect to solder and flux; and,

ii. not more than a weighted average of 0.25 percent lead when used with respect to the wetted surfaces of pipes, pipe fittings, plumbing fittings, and fixtures.

b. calculation:

i. The weighted average lead content of a pipe, pipe fitting, plumbing fitting, or fixture shall be calculated by using the following formula:

(a). For each wetted component, the percentage of lead in the component shall be multiplied by the ratio of the wetted surface area of that component to the total wetted surface area of the entire product to arrive at the weighted percentage of lead of the component. The weighted percentage of lead of each wetted component shall be added together, and the sum of these weighted percentages shall constitute the weighted average lead content of the product. The lead content of the material used to produce wetted components shall be used to determine compliance with Clause a.ii. above. For lead content of materials that are provided as a range, the maximum content of the range shall be used.

Listed—equipment or materials included in a list published by an approved nationally recognized testing laboratory, inspection agency or other organization concerned with product evaluation that maintains periodic inspection of production of *listed* equipment or materials, and whose listing states either that the equipment or material meets nationally recognized standards or has been tested and found suitable for use in a specified manner. The means for identifying *listed* equipment may vary for each testing

laboratory, inspection agency, or other organization concerned with product evaluation, some of which do not recognize equipment as *listed* unless it is also labeled. The *plumbing official* should utilize the system employed by the listing organization to identify a *listed* product.

a. In respect to any solder, flux, pipes, pipe fittings, plumbing fittings, or fixtures which are claimed to be lead free, this defined term (listed) shall additionally include the requirement that all such solder, flux, pipes, pipe fittings, plumbing fittings, or fixtures have been certified to be lead free by an independent American National Standards Institute (ANSI)-accredited third party testing laboratory, inspection agency or other organization concerned with product evaluation.

Liquid Waste—the discharge from any *fixture*, appliance, or appurtenance, in connection with a *plumbing system* which does not receive fecal matter.

Load Factor—the percentage of the total connected *fixture unit* flow rate which is likely to occur at any point in the *drainage system*. It varies with the type of occupancy, the total flow unit above this point being considered, and with the probability factor of simultaneous use.

Local Vent—a *vent pipe* which is independent of and not connected to the normal *sanitary sewer* vent piping system and which also terminates in the outside atmosphere in accord with the requirements of §907 of the Code. It is in no way interconnected with any other *vent pipe* except that the same type of apparatus may be served by a given vent [*e.g.*, one local vent (properly sized) may serve either multiple indirect waste pipes, multiple bedpan washers, or multiple sterilizer vents serving sterilizing apparatus). Only one type of apparatus shall be served by a given vent. Connections between local vents and normal sanitary plumbing systems are prohibited.

Loop Vent—same as a *circuit vent* except that it loops back and connects with the *stack vent* instead of the *vent stack*.

Main—the principal artery of any system of continuous piping, to which branches or laterals may be connected.

Main Vent—the principal artery of the venting system, to which the vent branches may be connected.

Manifold—a device wherein multiple individual distribution pipes are commonly connected and supplied with water. Each individual distribution pipe may be provided with a secondary shutoff valve. If provided, such secondary shutoff valve is located between the *manifold* and the individual distribution pipe.

Manifold Individual Distribution Pipe—the specific *water distribution pipe* which delivers water directly from the *manifold* and which terminates at the individual *fixture* water shutoff valve located on the *fixture* side of the wall. This term does not include the fixture supply line from the *fixture* valve to the water connection on the *fixture* itself.

Master Plumber—a natural *person* who possesses the necessary qualifications and knowledge to plan and lay out *plumbing systems*; who supervises *journeyman plumbers* in the installation, alteration and/or repair of *plumbing systems* and who is licensed as such by the State Plumbing Board of Louisiana. [see R.S. 37:1377(A)]

May—the word "*may*" is a permissive term.

Mop Sink—see *service sink*.

Nonpotable Water—in addition to its ordinary meaning, includes water of questionable potability on the discharge side of a *backflow preventer* used to isolate a portion of a *water distribution system* from the remainder of the *water distribution system* due to *backflow* connections.

Nuisance—public *nuisance* as known at common law or in equity jurisprudence; and whatever is dangerous to human life or detrimental to health; whatever building, structure, or premises is not sufficiently ventilated, sewered, drained, cleaned, or lighted, in reference to its intended or actual use; and whatever renders the air or human food or drink or water supply unwholesome.

Offset—a combination of elbows or bends in a line of piping which brings one section of the pipe out of the line but into a line parallel with the other section.

Permit Holder—any *person* required to obtain a permit to do *plumbing* work in accordance with state, parish, city or other local laws or ordinances. (Where such permits are not available, the property owner, contractor and installer shall be jointly responsible for the installation being in compliance with the requirements of this code and, where applicable, may all be considered *permit holders* as the term is used in this code.)

Person—a natural *person*, his heirs, executors, administrators, or assigns; and includes a firm, partnership or corporation, it's or their successors or assigns, the state of Louisiana or any of its political subdivisions, the United States government or any of its political subdivisions and any officer, employee and agent of one of those entities. Singular includes plural; male includes female.

Pitch—see *Grade*$_{(s)}$.

Plumbing—the practice, materials and *fixtures* used in the installation, maintenance, extension and alteration of all piping, *fixtures*, appliances and appurtenances in connection with any of the following: *Sanitary* drainage or storm drainage facilities, the venting system and the *water distribution system*, within or adjacent to any building, structure or conveyance; also the practice and materials used in the installation, maintenance, extension or alteration of medical gas piping, medical vacuum piping, storm water, *liquid waste* or *sewage*, and the *water distribution system* of any premises to their connection with any point of disposal or other acceptable terminal. *Plumbing* does not include the installation, alteration, repair or maintenance of automatic sprinklers and their related appurtenances including standpipes when connected to automatic sprinklers and including the underground or overhead water supply beginning at the outlet of an approved *backflow* prevention device installed under the *plumbing* provisions of this Part where water is to be used or is intended for use exclusively for fire protection purposes.

Plumbing Appurtenance—manufactured device, or a prefabricated assembly, or an on-the-job assembly of component parts, which is an adjunct to the basic piping system and *plumbing fixtures*. An appurtenance demands no additional water supply, nor does it add any discharge load to a *fixture* or the *drainage system*. It is presumed that it performs some useful function in the operation, maintenance, servicing, economy, or safety of the *plumbing system*.

Plumbing Fixtures—are installed receptacles, devices, or appliances which are supplied with water or which receive or discharge liquids or liquid-borne wastes, with or without discharge into the *drainage system* with which they may be directly or indirectly connected.

Plumbing Inspector—see *plumbing official*.

Plumbing Official—the *state health officer* and any individual official, board, department or agency established and authorized by a state, parish, city or other political subdivision created by law to administer and enforce the provisions of this code as adopted or amended. (Note: Since two persons/entities comprise the term *Plumbing Official*, for purposes of this code, the *state health officer* is sometimes referred to as the "co-State Plumbing Official" and the local plumbing jurisdiction is sometimes referred to as the "co-Local Plumbing Official".)

Plumbing System—includes the water-supply and distribution pipes; *plumbing fixtures* and *traps*; *soil*, *waste* and *vent pipes*; *building drains* and *building sewers* including their respective connections, devices and *appurtenances* within the property lines of the premises; water treating or water using equipment; and medical gas and medical vacuum piping and equipment.

Potable Water—water having bacteriological, physical, radiological and chemical qualities that make it safe and suitable for human consumption.

Pressure—the normal force exerted by a homogenous liquid or gas, per unit of area, on the wall of the container.

a. *Pressure, Static*—the pressure existing without any flow.

b. *Pressure, Flowing*—the residual *pressure* in the water supply pipe at the faucet or water outlet while the faucet or water outlet is wide open and flowing.

c. *Pressure, Residual*—the *pressure* available at the fixture or water outlet after allowance is made for *pressure* drop due to friction loss, head, meter and other losses in a system during maximum demand periods.

Private or *Private Use*—in the classification of *plumbing fixtures*, *private* applies to *fixtures* in residences or apartments and similar installations where the *fixtures* are intended for the use of a family or an individual.

Public or *Public Use*—in the classification of *plumbing fixtures*, *public* applies to fixtures in general, toilet rooms of schools, gymnasiums, hotels and motels, airports, bus and railroad stations, office buildings, *public* buildings, stadiums, department and mercantile stores, *public* comfort stations, bars, restaurants, commercial buildings or places to which the *public* is invited or which are frequented by the *public* without special permission or special invitation, and other installations (whether pay or free) where a number of fixtures are installed so that their use is similarly unrestricted.

Reclaimed Water—treated wastewater effluent meeting the requirements of the Louisiana Reclaimed Water Law (R.S. 30:2391, et seq.) that is suitable for a direct *beneficial use* or a controlled use and that is therefore considered a valuable resource.

Readily Accessible—having direct access without the need of removing any panel, door or similar covering of the item described and without requiring the use of portable ladders, chairs, etc. See *Accessible*.

Relief Vent—a vent whose primary function is to provide circulation of air between the *drainage system* and *vent system*.

Residential Buildings—buildings in which families or households live and in which cooking and sleeping accommodations are provided for each family or household unit independently, and in which no area within the building is used or occupied for any other purpose except that such buildings may have central washing facilities, as permitted in Chapter 4.

Return Offset—a double *offset* installed so as to return the pipe to its original alignment.

Revent Pipe—that part of a vent pipe line which connects directly with an individual waste or group of wastes, underneath or in back of the *fixture* and extends either to the *main vent* or *branch vent*. Sometimes called an *individual vent*.

Riser—a water supply pipe which extends vertically one full story or more to convey water to *branches* or *fixtures*.

Roof Drain—a drain installed to receive water collecting on the surface of a roof and to discharge it into the *leader* (downspout).

Roughing-In—the installation of all parts of the *plumbing system* which can be completed prior to the installation of *fixtures*. This includes drainage, water supply, and vent piping, and the necessary *fixture* supports.

Sand Interceptor—an *interceptor* used to remove sand from the *liquid waste* stream.

Sanitary—for or relating to the preservation or restoration of health; associated with measures or equipment for improving conditions that influence health; free from or effective in preventing or checking an agent injurious to health; a water closet, urinal, or similar equipment fitted with appropriate *plumbing* for the purpose of conducting wastewater to a point of collection and treatment prior to discharge.

Sanitary Sewage—see *sewage*.

Sanitary Sewer—a pipe which carries *sewage* and excludes storm, surface and ground water.

Scald-Preventative Valve—a type of valve placed in a water distribution system which is designed to prevent *persons* from being scalded with hot water when using certain types of plumbing fixtures. The valve uses one of the following technologies in its design:

a. a pressure balancing valve which senses incoming hot and cold water pressures and compensates for fluctuations in either to stabilize outlet temperature;

b. a thermostatic valve which senses outlet temperature and compensates for fluctuations in incoming hot and cold water temperatures and pressures to stabilize outlet temperature; or,

c. a combination thermostatic/pressure balancing valve which senses outlet temperature and incoming hot and cold water pressures and compensates for fluctuations in incoming hot and cold water temperatures and pressures to stabilize outlet temperature.

Scupper—an opening in a wall or parapet that allows water to drain from a roof.

Separator—see interceptor.

Septic Tank—a watertight receptacle which receives the discharge of a building sewer and is designed and

constructed so as to separate solids from the liquid, digest organic matter through a period of detention, and allow the liquid effluent to discharge into soil absorption trenches, an oxidation pond, a deep-type sand filter bed, and/or an effluent reduction option outside of the tank, all as approved and permitted by the state health officer under the requirements of Part XIII (Sewage Disposal) of the Louisiana State Sanitary Code (LAC 51:XIII).

Service Sink (slop/mop sink)—a deep bowl fixture intended for the filling and emptying of buckets or pails. Generally used for janitorial services.

Sewage—any *liquid waste* and/or other waste containing animal or vegetable matter in suspension or solution (and may include liquids containing chemicals in solution), the disposal of which requires a *sewerage system* approved and authorized by the *state health officer*, and may include its conveying liquid and/or other liquid or solid material which may be present therein.

Sewerage System—any system of piping (excluding the *building drain* and *building sewer*) and/or collection and/or transport system and/or pumping facility and/or treatment facility, all for the purpose of collecting, transporting, pumping, treating and/or disposing of *sewage*.

Shall—mandatory requirements.

Should—recommended or advisory procedures or equipment (*i.e.*, not a mandatory requirement).

Side Vent—a *vent pipe* connecting to the drain pipe through a fitting at an angle not greater than 45 degrees (0.785 rad) to the vertical.

Slip Joint—a mechanical type joint used primarily on *fixture traps*. The joint tightness is obtained by compressing a friction type washer such as rubber, nylon, neoprene, lead or special packing material against the pipe by the tightening of a (slip) nut.

Slope—see *grade*(s).

Slop Sink—see *service sink*.

Soil Pipe—any pipe which conveys the discharge of water closets or *fixtures* having similar functions, with or without the discharge from other *fixtures*, to the *building drain* or *building sewer*.

Solvent Cement—an adhesive (solvent) or mixture of adhesives which when applied to the surface of pipe and fittings will soften and fuse the plastic resin or compound of resins. Pipes and fittings are then joined causing the surfaces to unite forming a liquid tight joint.

Special Waste Pipe—see Chapter 8.

Spill-Proof Vacuum Breaker—an assembly consisting of one check valve force-loaded closed and an air inlet valve force-loaded open to atmosphere, positioned downstream of the check valve.

Stack—the vertical *main* of a system of soil, waste or vent piping.

Stack Group—a term applied to the location of *fixtures* in relation to the *stack* so that by means of proper fittings, vents may be reduced to a minimum.

Stack Vent—the extension of a soil or waste *stack* above the highest horizontal *drain* connected to the *stack*. Sometimes called *waste vent* or soil vent.

Stack Venting—a method of venting *fixtures* on a single *branch interval* through the soil or waste *stack*.

State Health Officer—means the legally appointed and/or acting *state health officer* as defined in R.S. 40:2 and includes his/her duly authorized technical representative; however, in the case of variances allowed under Section 105 of this Part, this term shall mean the *state health officer* acting personally or any such *person* that the *state health officer* has personally designated to duly sign such variances in his/her behalf.

Storm Drain—see *building storm drain*.

Storm Sewer—a sewer used for conveying rain water, surface water, condensate, cooling water or similar *liquid wastes*.

Subsoil Drain—a *drain* which receives only subsurface or seepage water and conveys it to a place of collection and/or disposal.

Substantial Renovation—

a.i. alterations or repairs made within a 12 month period, costing in excess of 50 percent of the then physical value of the existing building; or

ii. alterations or repairs made within a 12 month period, costing in excess of $15,000; or

iii. alterations or repairs made involving a change in "occupancy classification" or use of the property.

b. The physical value of the building in Clause a.i of this Paragraph may be established by an appraisal not more than three years old, provided that said appraisal was performed by a certified appraiser or by the tax assessor in the parish where the building is located.

c. The cost of alterations or repairs in Clause a.ii or a.iii of this Paragraph may be established by:

i. an estimate signed by a licensed architect or a licensed general contractor; or

ii. by copies of receipts for the actual costs.

d. The text contained in Subparagraphs "a.i." through "c.ii." continues to apply when any particular portion of this code calls for an additional requirement to the term substantial renovation (*e.g.*, see LAC 51:XIV.411.A.1).

Sump—a tank or pit which receives *sewage* or *liquid waste*, located below the normal *grade*$_{(S)}$ of the gravity system and which must be emptied by mechanical means.

Supports—devices used for supporting and securing pipe and *fixtures* to walls, ceilings, floors or structural members.

This Code—LAC 51:XIV and synonymous to *this Part*.

This Part— LAC 51:XIV and synonymous to *this code*.

Trailer Trap—a device, fitting or assembly of fittings installed in the *building sewer* for a *travel trailer* or *mobile/manufactured home* which is used to prevent the circulation of air between the *building sewer* and the *drainage system* of the individual *travel trailer* or *mobile/manufactured home*.

Trap—a fitting or device so designed and constructed as to provide, when properly vented, a liquid seal which will prevent the back passage of air without materially affecting the flow of *sewage* or *waste* water through it.

Trap Primer (drainage type)—an approved device complying with ASSE 1044 designed to deliver a sufficient amount of wastewater to a seldom used *trap* in order that the *trap seal* may be properly maintained.

Trap Primer (potable water supply fed type)—an approved device designed to deliver a sufficient amount of water obtained directly from a potable water pressure pipe to a seldom used *trap* in order that the *trap seal* may be properly maintained.

Trap Seal—the maximum vertical depth of liquid that a *trap* will retain, measured between the *trap's* crown weir and the top of the dip of the *trap*.

Trap Seal Primer Valve—see *trap primer* (potable water supply fed type).

Unstable Ground—earth that does not provide a uniform bearing for the barrel of the sewer pipe between the joints at the bottom of the pipe trench.

Vacuum Breaker—a device which prevents *back-siphonage* of water by admitting atmospheric pressure through ports to the discharge side of the device.

Vent Pipe—see *vent system*.

Vent Stack—a vertical *vent pipe* installed primarily for the purpose of providing circulation of air to and from any part of the *drainage system*.

Vent System—a pipe or pipes installed to provide a flow of air to or from a *drainage system* or to provide a circulation of air within such system to protect *trap seals* from siphonage and back pressure.

Vertical Pipe—any pipe or fitting which is installed in a vertical position or which makes an angle of not more than 45 degrees (0.785 rad) with the vertical.

Wash Rack—a floor or slab area with *floor drain* used for cleaning containers and equipment exposed to organic wastes of food origin.

Waste—see liquid waste and industrial wastes.

Waste Pipe—a pipe which conveys only *liquid waste*, free of fecal matter.

Waste Vent—see *stack vent*.

Water Distribution Pipe—the piping within a building or structure which conveys cold or hot water from the *water service pipe* to the *plumbing fixtures* and other water outlets.

Water Distribution System—the system of pipes that is installed and maintained by the owner or owners on the premises or private property from the discharge side of the meter, the *water main*, or other approved sources of water supply. This system includes the necessary connecting pipes, fittings, control valves, all *appurtenances* connected thereto, and includes fire protection piping if not installed as a separate system.

Water Heater—an appliance for supplying potable hot water for domestic or commercial purposes.

Water Main—the principal artery (or arteries) used for the distribution of *potable water* to consumers by a *water supply system*. For publicly-owned water supply systems (*e.g.*, municipal water supply systems), water mains are normally located on public property, in the street, or in an approved dedicated easement.

Water Outlet—as used in connection with the *water distribution system*, the discharge opening for the water to:

a. a fixture;

b. atmospheric pressure (except into an open tank which is part of the water distribution system);

c. a boiler or heating system; or,

d. any water-operated device or equipment, but not a part of the *plumbing system*.

Water Riser Pipe—see riser.

Water Service Pipe—the pipe from the *water main*, water meter, *water supply system* or other approved source of water supply, to the building or structure served.

Water Supply System—the system of pipes or other constructed conveyances, structures and facilities through which water is obtained, treated (if necessary) to make it *potable* and then distributed (with or without charge) for *human consumption* or other use.

Wet Bar—a bar within a food service establishment at which patrons may walk up to, order, and receive an alcoholic beverage directly from a bartender.

Wet Vent—a vent which receives the discharge from wastes other than water closets.

Yoke Vent—a pipe connecting upward from a soil or waste *stack* to a *vent stack* for the purpose of preventing pressure changes in the *stacks*.

AUTHORITY NOTE: Promulgated in accordance with R.S. 40:4(A)(7), R.S. 40:5(2)(3)(7)(9)(16)(17)(20), and R.S. 40:1299.27.1.

HISTORICAL NOTE: Promulgated by the Department of Health and Hospitals, Office of Public Health, LR 38:

Chapter 3. General Regulations

§301. General

A. Scope. The provisions of this Chapter shall govern the general regulations not specific to other Chapters.

B. Basic Principles. The basic principles of this Subsection are enunciated below as basic goals in environmental sanitation worthy of accomplishment through properly designed, acceptably installed and adequately maintained plumbing systems. Some of the details of plumbing construction must vary, but the basic sanitary and safety principles are the same. The principles may serve to define the intent of this Part and other applicable Parts of the Louisiana State Sanitary Code (LAC 51).

1. Principle Number 1. Buildings, structures and premises intended for human habitation, occupancy, use of employment, or the preparation or processing of food, drinks or other materials for human consumption shall be provided with an adequate, safe and potable water supply through a safe system of piping to all fixtures, appliances, appurtenances, etc.

2. Principle Number 2. Every building having plumbing fixtures installed and intended for human habitation, occupancy or use on premises abutting on a street, alley or easement in which there is a community sewerage system shall have a separate connection with the sewer main.

3. Principle Number 3. A dwelling type building provided with a drainage system, a community sewerage system connection or an individual sewerage system shall have at least one water closet, one bathtub or shower, one lavatory, one kitchen-type sink and an adequate source of hot water for each family unit to meet minimum basic requirements for health, sanitation and personal hygiene. Water heating facilities shall be accessible for emergency maintenance without entering any individual apartment or living unit, except that water heaters may be located within an apartment or living unit when supplying hot water to that unit only. All other buildings, structures or premises intended for human occupancy or use shall be provided with adequate sanitary facilities as may be required, but not less than one water closet and one lavatory.

4. Principle Number 4. Plumbing fixtures shall be made of smooth nonabsorbent material, shall be free from

concealed fouling surfaces, and shall be located in ventilated enclosures.

5. Principle Number 5. Each fixture directly connected to the sanitary drainage system shall be equipped with a water-seal trap.

6. Principle Number 6. No substance which will clog the pipes, produce explosive mixtures, destroy the pipes or their joints or interfere unduly with the sewage disposal process shall be allowed to enter the building drainage system.

7. Principle Number 7. Proper protection shall be provided to prevent contamination of food, water, sterile goods and similar materials by backflow of sewage. When necessary, the fixture, device or appliance should be connected indirectly with the building drainage system.

8. Principle Number 8. No water closet shall be located in a room or compartment which is not properly lighted and ventilated.

9. Principle Number 9. If water closets or other plumbing fixtures are installed in buildings where there is no sewer within a reasonable distance, suitable provision shall be made for disposing of the building sewage by some accepted method of sewage treatment and disposal.

10. Principle Number 10. Where a plumbing drainage system may be subject to backflow of sewage, suitable provisions shall be made to prevent its overflow in the building.

11. Principle Number 11. Plumbing shall be installed with due regard to preservation of the strength of structural members and prevention of damage to walls and other surfaces through fixture usage.

12. Principle Number 12. Sewage or other waste, from a plumbing system, which may be deleterious to surface or subsurface waters shall not be discharged into the ground or into any waterway unless it has first been rendered innocuous through subjection to some acceptable form of treatment.

13. Principle Number 13. Plumbing fixtures, devices, appliances and appurtenances shall be adequately supplied with water in sufficient volume and pressure to enable them to function properly.

14. Principle Number 14. The pipes conveying water to plumbing fixtures, appliances, devices and appurtenances shall be of sufficient size as to supply water at rates that will prevent undue pressure drops at any one fixture, when any other fixture, appliance, device or appurtenance or group is being flushed, operated or used.

15. Principle Number 15. There shall be no direct or indirect cross connections, either existing or potential, between a safe potable water supply and an unsafe, nonpotable supply.

16. Principle Number 16. Adequate protection shall be provided to prevent possible backflow or back-siphonage of an unsafe or potentially hazardous fluid or material into a safe water supply.

17. Principle Number 17. Piping and connections of the plumbing system shall be of durable materials, free from defects in workmanship and materials, and systems shall be designed and constructed to provide adequate service for a reasonable life under stresses imposed by structural loading, temperature variation, vibration and other conditions.

18. Principle Number 18. Devices for heating and storing water shall be designed and installed to prevent all danger from overheating and explosion and to prevent undue flow of hot water or steam into the cold water supply pipes.

19. Principle Number 19. Refrigerators, coolers, receptacles, sterilizers, vats and similar equipment used for storing or holding foods, beverages, sterile goods and water conditioning equipment, etc., shall discharge into the building drainage system through an indirect waste.

20. Principle Number 20. Water closets, bathtubs, showers, urinals and similar fixtures shall be suitably enclosed and screened for privacy.

21. Principle Number 21. Plumbing systems, including fixtures, shall be maintained in sanitary condition and proper working order.

22. Principle Number 22. Sewage and wastes from plumbing and drainage systems shall be adequately treated and disposed of in accordance with the requirements of the plumbing official.

23. Principle Number 23. No potable water, soil or waste pipe shall be installed or permitted outside of a building, or concealed in outside walls or in any place where they may be subjected to freezing temperatures, unless adequate provision is made to protect them from freezing.

C. Repairs and Alterations. In existing buildings or premises in which plumbing installations are to be altered, repaired, or renovated, necessary deviations from the provisions of this Part may be permitted, provided such deviations conform to the intent of this Part and are approved in writing by the plumbing official.

D. Health or Safety. Wherever compliance with all the provisions of this Part fails to eliminate or alleviate a nuisance which may involve health or safety hazards, the owner or his agent shall install such additional plumbing or drainage equipment as may be necessary to abate such nuisance.

E. Workmanship. Workmanship shall conform to generally accepted good practice.

F. Rodent-Proofing. All exterior openings provided for the passage of piping shall be properly sealed with snugly fitting collars of metal or other approved rodent-proof material securely fastened into place. (Also, additional/more specific requirements which may be applicable can be found at LAC 51:V.305.F, 305.J, and 307.C.)

1. Interior openings through walls, floors, and ceilings shall be rodent-proofed as found necessary by the plumbing official.

G. Used Equipment. It shall be unlawful to install used equipment or material for plumbing installations unless it complies with the minimum standards set forth in this Part and is approved by the plumbing official.

H. Condemned Equipment. Any plumbing equipment condemned by the plumbing official because of wear, damage, defects, or sanitary hazards shall not be reused for plumbing purposes.

I. Drainage Below Sewer Level. Drainage piping located below the level of the sewer shall be installed in accordance with Chapter 7.

J. Connections to Drainage System. All plumbing fixtures, drains, appurtenances and appliances used to receive or discharge liquid wastes or sewage shall be directly

connected properly to the drainage system of the building or premises, in accordance with the requirements of this Part. This Subsection shall not be construed to prevent indirect waste systems provided for in Chapter 8.

K. Connections to Water Supply. Every plumbing fixture or device or appliance requiring or using water for its proper operation shall be directly or indirectly connected to the water supply system in accordance with the provisions of this Part.

AUTHORITY NOTE: Promulgated in accordance with R.S. 40:4(A)(7) and R.S.40:5(2)(3)(7)(9)(16)(17)(20).

HISTORICAL NOTE: Promulgated by the Department of Health and Hospitals, Office of Public Health, LR 38:

§303. Materials

Editor's Note: The text in this Section will be effective on January 1, 2013.

A. Minimum Standards. Materials listed in this Section are applicable to more than one Chapter. Material requirements for specific systems and fixtures are noted in the specific Chapters. Materials listed in this Part shall conform at least to the standards cited when used in the construction, installation, alteration, or repair of any part of a plumbing and drainage system, except that the plumbing official shall allow the extension, addition, or relocation of existing soil, waste or vent pipes with materials of like grade$_{(Q)}$, as permitted by this Part.

B. Use of Materials. Where more than one standard is listed, the material shall conform to at least one of the standards cited opposite it. Its use shall be further governed by the requirements imposed in other chapters of the code. Materials not included in the table shall be used only as provided for in Subsection A of this Section. Materials shall be free of manufacturing defects or damage, however occasioned, which would, or would tend to, render such materials defective, unsanitary, or otherwise improper to accomplish the purpose of this Part.

C. Specifications for Materials. Standard specifications for general materials for plumbing installations are listed in Table 303, with specific material specifications listed elsewhere in this Part. Products conforming at least to any one of the specifications listed for a given material shall be considered acceptable.

1. Abbreviations used in Table 303, and with the specific materials as listed elsewhere in this Part refer to standards or specifications as identified below. Addresses and more information for these organizations are listed in §1405.

AGA—American Gas Association.

AHRI—Air-Conditioning, Heating, and Refrigeration Institute.

ANSI—American National Standards Institute, Inc.

ARI—Air Conditioning and Refrigeration Institute (effective January 1, 2008, now AHRI)

APSP—Association of Pool and Spa Professionals [formerly, National Pool and Spa Institute (*NSPI)*]

ASME—American Society of Mechanical Engineers.

ASSE—American Society of Sanitary Engineering.

ASTM—American Society for Testing Materials International.

AWS—American Welding Society.

AWWA—American Water Works Association.

CDA—Copper Development Association, Inc.

CISPI—Cast Iron Soil Pipe Institute.

CAN/CSA—Canadian Standards Association.

FHA-MPS—Federal Housing Administration - Minimum Property Standards.

FMRC—Factory Mutual Research Corporation (approval standards obtained from FM Approvals, LLC).

FS—Federal Specifications obtained from the General Services Administration, Federal Supply Service, Specification Section.

MSS—Manufacturers Standardization Society of the Valve and Fittings Industry, Inc.

NFiPA—National Fire Prevention Association.

NSF—NSF International.

PDI—Plumbing and Drainage Institute.

PPFA—Plastic Pipe & Fittings Association.

PPI—Plastics Pipe Institute.

PS—Product Standard by the United States Department of Commerce and obtained from the Superintendent of Documents, Government Printing Office.

UL—Underwriters Laboratories, Inc.

2. ASTM standards are issued under fixed designations; the final number shown in Chapter 14 indicates the year of original adoption, or in the case of revision, the year of last revision. "T" indicates Tentative. In the "CS" series of standards, also, the final number indicates the year of issue.

Table 303
General Materials

Materials	Standards
Plastic Materials	
Acrylics	ASTM D 788
Nylon	ASTM D 789
Polytetrafluoroethylene (PTFE)	ASTM D 4894, ASTM D4895
Plastic Cement And Solvents	
ABS-Solvent Cement	ASTM D 2235, Listed
Joints for IPS PVC Pipe Using Solvent Cement	ASTM D 2672
Making Solvent-Cement Joints with Polyvinyl Chloride (PVC) Pipe and Fittings	ASTM D 2855
Primers for use in Solvent Cemented Joints of Polyvinyl Chloride (PVC) Plastic Pipe and Fittings	ASTM F 656
PVC Solvent Cement	ASTM D 2564, Listed
Solvent Cements for Transition Joints Between Acrylonitrile-Butadiene-Styrene (ABS) and Polyvinyl Chloride (PVC) Non-Pressure Piping Components	ASTM D 3138, see §711.D.4 (Note: This is not an all-purpose solvent cement. Only to be utilized for joining a building drain to a building sewer)
Safe Handling of Solvent Cements used for Joining Thermoplastic Pipe and Fittings	ASTM F 402
Solvent Cements for Chlorinated Polyvinyl Chloride (CPVC) Plastic Pipe and Fittings	ASTM F 493
Plastic Pipe Installation	
Electrofusion Joining Polyolefin Pipe and Fittings	ASTM F 1290, see §621.E
Heat Fusion Joining of Polyethylene Pipe and Fittings	ASTM F 2620, see §621.E
Heat Joining Polyolefin Pipe and Fittings	ASTM D 2657
Underground Installation of Flexible Thermoplastic Sewer pipe	ASTM D 2321
Underground Installation of Thermo-Plastic Pressure Piping	ASTM D 2774

Table 303 General Materials	
Materials	**Standards**
Valves	
Pressurized Fixture Flushing Devices (Flushometers)	ASSE 1037
Metal Sheet	
Brass, sheet	ASTM B 248/B 248M
Copper, sheet	ASTM B 152/B 152M
Lead, sheet	FS QQ-L-201F(2)
Steel Sheet, Zinc-Coated Galvanized by the Hot-Dip Process	ASTM A 653/A 653M
Miscellaneous	
Bare Stainless Steel Welding Electrodes and Rods	AWS A 5.9/A 5.9M
Brazing Filler Metal	AWS A 5.8/A 5.8M
Cement Lining	AWWA C 104, ANSI A 21.4
Cleanouts	ASME A 112.36.2M
Coal-Tar Enamel and Tape (Protective Coating)	AWWA C 203
Compression Gaskets for Cast Iron Soil Pipe and Fittings	ASTM C 564, CISPI HSN
Couplings used in Cast Iron Systems	ASTM C 564 (Gasket Material Only), CISPI 310, FMRC 1680, ASTM C 1277
Drinking Water Treatment Units Health Effects Aesthetic Effects	NSF 53, NSF 42
Fixed Flow Restrictors	ASSE 1034
Flexible Transition Couplings for Underground Piping Systems	ASTM C 1173
Floor and Trench Drains	ASME A 112.6.3
Grooved and Shouldered Type Joints	AWWA C 606
Handheld Showers (Backflow Prevention Devices)	ASSE 1014
Laboratory Faucet Backflow Preventers	ASSE 1035
Liquid and Paste Fluxes for Soldering of Copper and Copper Alloy Tube	ASTM B 813
Load Bearing, Bonded, Waterproof Membranes for Thin-Set Ceramic Tile and Dimension Stone Installation	ANSI A 118.10
Making Copper Soldered Joints	ASTM B 828
Plastic Toilet (Water Closet) Seats	IAPMO Z 124.5
Reverse Osmosis Drinking Water Treatment Systems	NSF 58
Roof, Deck and Balcony Drains	ASME A 112.6.4
Rubber Gaskets for Concrete Pipe and Manholes	ASTM C 443/C 443M
Rubber Rings for Asbestos Cement Pipe	ASTM D 1869, see §313.E
Rubber and Thermoplastic Elastomers, Test Methods	ASTM D 395, ASTM D 412, 711.D
Solder Metal	ASTM B 32
Supports (Floor-Affixed) for Off-the-Floor Plumbing Fixtures for Public Use	ASME A112.6.1M
Supports(Framing-Affixed) for Off-the-Floor Water Closets with Concealed Tanks	ASME A112.6.2
Wall Hydrants, Frost Resistant, Automatic Draining, Anti-Backflow Type	ASSE 1019

D. Identification of Materials. Each length of pipe and each pipe fitting, trap, fixture and device used in a plumbing system shall be marked in accordance with the approved applicable standard to which it is manufactured.

E. Installation of Materials. All materials used shall be installed in strict accordance with the standards under which the materials are accepted and approved, including the appendices which are related to installation. In the absence of such installation procedures, the manufacturer's published procedures or recommendations shall be followed.

F. Water Piping Quality. All potable water pipes, pipe related products and materials that join or seal pipes and pipe related products shall be evaluated and listed as conforming with a national consensus product (or material) standard, ANSI/NSF Standard 61, and NSF/ANSI 372. Any solder or flux used in the installation or repair of any plumbing in a residential or nonresidential facility providing water for human consumption shall be lead free.

1. Exception. The lead free requirement of Subsection "F." shall not apply to:

a. leaded joints necessary for the repair of existing cast iron pipes;

b. pipes, pipe fittings, plumbing fittings, or fixtures, including backflow preventers, that are used exclusively for nonpotable services such as manufacturing, industrial processing, irrigation, outdoor watering, or any other uses where the water is not anticipated to be used for human consumption; or,

c. toilets, bidets, urinals, fill valves, flushometer valves, tub fillers, shower valves, service saddles, or water distribution main gate valves that are 2 inches in diameter or larger.

G. Special Materials. The following apply to several special materials.

1. Lead. See Table 303. Sheet lead shall be not less than the following:

a. For safe pans - not less than 4 pounds per square foot (psf) [19.5 kilograms/meter^2 (kg/m^2)] coated with an asphalt paint or equivalent.

b. For flashings of vent terminals - not less than 3 psf (14.6 kg/m^2).

c. Lead bends and lead traps shall be not less than 1/8-inch (3.18 mm) wall thickness.

d. Any solder or flux which is used in the installation or repair of any plumbing in a residential or nonresidential facility providing water for human consumption shall be lead free (i.e., shall not contain more than 0.2 percent lead). Any pipe, pipe fitting, plumbing fitting, and fixture which is used in the installation or repair of any plumbing in a residential or nonresidential facility providing water for human consumption shall be lead free (i.e., shall not contain more than a weighted average of 0.25 percent lead when used with respect to the wetted surfaces of pipes, pipe fittings, plumbing fittings, and fixtures.).

i. Exception. The lead free requirement of Subparagraph "d." shall not apply to:

(a). leaded joints necessary for the repair of existing cast iron pipes;

(b). pipes, pipe fittings, plumbing fittings, or fixtures, including backflow preventers, that are used exclusively for nonpotable services such as manufacturing, industrial processing, irrigation, outdoor watering, or any other uses where the water is not anticipated to be used for human consumption; or,

(c). toilets, bidets, urinals, fill valves, flushometer valves, tub fillers, shower valves, service

saddles, or water distribution main gate valves that are 2 inches in diameter or larger.

2. Copper. See Table 303. Sheet copper shall be not less than the following:

a. Safe pans - 12 ounces (oz) per square foot (sq ft) (3.7 kg/m^2).

b. Vent terminal flashings - 8 oz per sq ft (2.4 kg/m^2).

3. Caulking Ferrules. Caulking ferrules shall be manufactured from bronze, wrought copper, or brass and shall be in accordance with Table 303.G.3.

Table 303.G.3 Caulking Ferrules			
Pipe Size (in)	**Inside Diameter (in)**	**Length (in)**	**Minimum Weight Each**
2	2 ¼	4 ½	1 lb 0 oz
3	3 ¼	4 ½	1 lb 12 oz
4	4 ¼	4 ½	2 lb 8 oz
1 in = 25.4 mm 1 lb = 0.4536 kg			

4. Soldering Bushings. Soldering bushings where permitted shall be of red brass in accordance with Table 303.G.4.

Table 303.G.4 Soldering Bushings	
Pipe Size (In)	**Minimum Weight Each**
1 1/4	6 oz
1 1/2	8 oz
2	14 oz
2 1/2	1 lb 6 oz
3	2 lb 0 oz
4	3 lb 8 oz
1 in = 25.4 mm 1 lb = 0.4536 kg	

5. Floor Flanges. The following applies to floor flanges.

a. Floor flanges for water closets or similar fixtures shall be not less than 1/8-inch (3.18 mm) thick for brass, 1/4-inch (6.35 mm) thick and not less than 2-inch (51 mm) caulking depth for cast iron or galvanized malleable iron. Flanges shall be of the approved type. Offset closet flanges shall be prohibited, except by approval of the plumbing official. Closet screws and bolts shall be of brass.

b. Flanges shall be soldered to lead bends, or shall be caulked, soldered or threaded to other metal. Plastic flanges shall be joined to plastic closet bends with the approved solvent cement.

6. Cleanouts. The following applies to cleanouts.

a. Cleanouts shall have plugs of brass and shall conform to ASTM A 74. Cleanouts may also have plugs of approved nylon plastic. Plugs may have raised square or countersunk heads except countersunk head shall be used where raised heads may cause a hazard.

b. Cleanout plugs with borosilicate glass systems shall be of borosilicate glass.

7. Nonmetallic Shower Pans. The following applies to non-metallic shower pans.

a. Plasticized polyvinyl chloride (PVC) sheet shall be a minimum of 0.040 inch (1.02 mm) thick, and shall meet the requirements of ASTM D 4551. Sheets shall be joined by solvent welding in accordance with the manufacturer's published recommendations.

b. Non-plasticized chlorinated polyethylene (CPE) sheet shall be a minimum 0.040 inch (1.02 mm) thick and shall meet the requirements of ASTM D 4068. Sheets shall be joined by solvent welding in accordance with the manufacturer's published recommendations.

c. Load bearing, bonded, waterproof membranes for thin-set ceramic tile and dimension stone installation shall meet the requirements of ANSI A 118.10 and shall be installed in accordance with the manufacturer's published recommendations.

d. All shower pan material shall be permanently marked by the manufacturer so as to enable the inspecting authority to determine the acceptability of the material and its identification according to the code. This marking is to be conveniently readable to the inspector when the material is in its installed position.

H. Limitations of Use of Materials. The following applies to limitations on the use of certain materials.

1. Pressure-rated Plastic Pipe and Fittings for Water Service Pipe. The following applies to pressure-rated plastic pipe and fittings for water service pipe.

a. In Table 303 and Table 603, 4-digit numbers listed under "Materials" column represent the ASTM identification numbers assigned to these materials by the joint ASTM-NSF-PPI committee to assist in quick, easy identification of the materials. The numbers appear as a part of the marking on the pipe and tubing. These and no others are approved.

b. All plastic pipe and fittings approved in this Part shall be properly marked as specified by their respective standards. All material shall be installed in accordance with the applicable ASTM standards. No materials shall be commingled within the same system except those which are specifically approved in writing in the respective standards.

c. Existing metallic water service piping used for electrical grounding shall not be replaced with nonmetallic pipe or tubing until other grounding means are provided which are satisfactory to the proper administrative authority having jurisdiction.

2. Plastic Pipe and Fittings for Drain, Wastes and Vents. The following applies to plastic pipe and fittings for drain, wastes and vents.

a. Installations for plumbing drainage, waste and vents both above and below ground, indirect waste and storm drains shall conform to applicable standards listed in Table 303 and Table 703 and in conformity with the combustible materials regulations of plumbing in fire rated assemblies, in concealed spaces, and in plenums as required by the applicable codes adopted under the authority of Act 12 of the 2005 First Extraordinary Session.

b. There shall be no commingling of different materials except through proper adapters. In all cases, approved solvent cement designated for the particular material shall be used.

c. Coextruded pipe with a cellular core and solid wall ABS DWV and PVC DWV plastic pipe shall be IPS Schedule 40 when used for drain, wastes and vents.

3. Stainless Steel Water Tube. Stainless steel water tube and piping shall conform to the standards listed in Table 603.

4. Plastic Pipe for Drains and Sewers. The following applies to plastic pipe for drains and sewers.

a. Coextruded PVC plastic pipe shall have a pipe stiffness of 25 (PS 25) when used for storm sewers, storm drains, foundation drains, and subsoil drains.

b. Coextruded PVC plastic pipe shall have a pipe stiffness of 50 (PS 50) when used for outside building sewers, storm drains, and storm sewers in accordance with §§705.A, 1101.E, 1103.C and 1103.D.

5. Plastic Piping Components and Related Materials. All plastic plumbing pipes, plastic plumbing piping components and related materials shall be listed as conforming with NSF Standard 14.

AUTHORITY NOTE: Promulgated in accordance with R.S. 40:4(A)(7), R.S. 40:5(2)(3)(7)(9)(16)(17)(20), and R.S. 40:1299.27.1.

HISTORICAL NOTE: Promulgated by the Department of Health and Hospitals, Office of Public Health, LR 38:

§305. Protection of Pipes

A. Breakage and Corrosion. Pipes passing under or through walls shall be protected from breakage. Pipes passing through concrete or cinder walls and floors or other corrosive material shall be protected against external corrosion by a protective sheathing or wrapping or other means that will withstand any reaction from lime and acid of concrete, cinder or other corrosive material. Sheathing or wrapping shall allow for expansion and contraction of piping to prevent any rubbing action. Minimum wall thickness of material is to be 0.025 inch (0.635 mm).

B. Sleeves. The following applies to sleeves.

1. Annular spaces between sleeves and pipes shall be filled or tightly caulked as approved by the plumbing official.

2. Annular spaces between sleeves and pipes in fire rated assemblies shall be filled or tightly caulked in accordance with the applicable codes adopted under the authority of Act 12 of the 2005 First Extraordinary Session.

C. Pipes through Footings or Foundation Walls. A soil pipe, waste pipe, or building drain that passes under a footing or through a foundation wall shall be provided with a relieving arch, or a pipe sleeve of Schedule 40 pipe shall be built into the masonry wall. Such sleeve shall be two pipe sizes greater than the pipe passing through or as may be approved in writing by the plumbing official.

D. Minimum Depth of Water Piping Outside of Building. Water piping outside the building line shall be installed not less than 12 inches (305 mm) deep.

E. Trench Location. Trenching installed parallel to footings shall not extend below the 45° (0.785 rad) bearing plane of the footing or wall unless approved by the plumbing official.

F. Waterproofing of Openings. Joints at the roof, around vent pipes, shall be made watertight by the use of lead, copper, galvanized steel, aluminum, plastic or other approved flashings or flashing material. Exterior wall openings shall be made watertight.

G. Pipes in Wood Construction. Where cutting, notching, or boring occurs within 1 1/2 inches (38 mm) of the face of wooden joists, rafters, or studs, a protective steel plate 1/16-inch (1.59 mm) thick shall be used to protect the piping. The steel plate shall be the full width of the member and shall extend at least 2 inches (51 mm) on each side of the cut, bore, or notch.

1. Exception. A protective plate is not required for cast iron, galvanized or black steel, and Grade$_{(Q)}$ H stainless steel pipe.

AUTHORITY NOTE: Promulgated in accordance with R.S. 40:4(A)(7) and R.S. 40:5(2)(3)(7)(9)(16)(17)(20).

HISTORICAL NOTE: Promulgated by the Department of Health and Hospitals, Office of Public Health, LR 38:

§307. Trenching, Excavation, and Backfill

A. Support of Piping. Buried piping shall be supported throughout its entire length.

B. Open Trenches. All excavations required to be made for the installation of a building drainage system, or any part thereof within the walls of a building, shall be open trench work and shall be kept open until the piping has been inspected, tested and accepted.

C. Mechanical Excavation. Trenches shall be properly graded and tamped to support the load of the pipe installation.

D. Backfilling. Adequate precaution shall be taken to insure proper compactness of backfill around piping without damage to such piping. See §705.H.

E. Tunneling. Where necessary, pipe may be installed by tunneling, jacking or a combination of both. In such cases, special care shall be exercised to protect the pipe from damage either during installation or from subsequent uneven loading. Where earth tunnels are used, adequate supporting structures shall be provided to prevent future settling or caving. Pipe may be installed in larger conduit which has been jacked through unexcavated portions of the trench.

F. Single Trench Prohibited. Water service pipes or any underground water pipes shall not be run or laid in the same trench as the building sewer or drainage piping, except as provided for in Chapters 6 and 7.

AUTHORITY NOTE: Promulgated in accordance with R.S. 40:4(A)(7) and R.S. 40:5(2)(3)(7)(9)(16)(17)(20).

HISTORICAL NOTE: Promulgated by the Department of Health and Hospitals, Office of Public Health, LR 38:

§309. Structural Safety

A. General. In the process of installing or repairing any part of a plumbing and drainage installation, the finished floors, walls, ceilings, tile work or any other part of the building or premises which must be changed or replaced shall be left in a safe structural condition in accordance with the requirements of the applicable codes adopted under the authority of Act 12 of the 2005 First Extraordinary Session.

B. Cutting, Notching and Boring. The following applies to cutting, notching and boring.

1. Notches on the ends of joists shall not exceed one-fourth the depth. Holes bored for pipes or cable shall not be within 2 inches (51 mm) of the top or bottom of the joist, and the diameter of any such hole shall not exceed one-third of the depth of the joist. Notches for pipes in the top or bottom of joists shall not exceed one-sixth of the depth and shall not be located in the middle one-third of the span.

2. In exterior walls and bearing partitions, any wood stud may be cut or notched to a depth not exceeding 25 percent of its width. Cutting or notching of studs to a depth not greater than 40 percent of the width of the stud is permitted in nonbearing partitions supporting no loads other than the weight of the partition.

3. A hole not greater in diameter than 40 percent of the stud width may be bored in any wood stud. Bored holes not greater than 60 percent of the width of the stud are permitted in nonbearing partitions or in any wall where each bored stud is doubled provided not more than two such successive double studs are so bored.

4. In no case shall the edge of the bored hole be nearer than 5/8-inch (15.9 mm) to the edge of the stud. Bored holes shall not be located at the same section of stud as a cut or notch.

AUTHORITY NOTE: Promulgated in accordance with R.S. 40:4(A)(7) and R.S. 40:5(2)(3)(7)(9)(16)(17)(20).

HISTORICAL NOTE: Promulgated by the Department of Health and Hospitals, Office of Public Health, LR 38:

§311. Fittings

A. Change in Direction. The following applies to the use of fittings in changes of direction of drainage piping.

1. Changes in direction in drainage piping shall be made by the appropriate use of 45° (0.785 rad) wyes, long-or-short-sweep quarter bends, one-sixth, one-eighth, or one-sixteenth bends, or by a combination of these or equivalent fittings. Single and double sanitary tees and quarter bends may be used in drainage lines only where the direction of flow is from the horizontal to the vertical. A sanitary tee shall not be used on a horizontal drainage line as a takeoff fitting for a vent.

2. Changes in direction in Schedule 40 DWV-PVC and ABS drainage piping shall be made by the appropriate use of 45° (0.785 rad) wyes, quarter bends or long sweep quarter bends, one-sixth, one-eighth, or one-sixteenth bends, or by a combination of these or equivalent fittings. Single and double sanitary tees and quarter bends may be used in drainage lines only where the direction of flow is from the horizontal to the vertical. A sanitary tee shall not be used on a horizontal drainage line as a takeoff fitting for a vent.

B. Short Sweeps. Short sweeps not less than 3-inch diameter may be used in soil and waste lines where the change in direction of flow is from the horizontal to the vertical and may be used for making necessary offsets between the ceiling and the next floor above.

C. Prohibited Fittings. A straight tee branch shall not be used as a drainage fitting. A saddle type fitting or running threads shall not be used in the drainage or vent system. Drainage or vent piping shall not be drilled or tapped unless approved by the plumbing official. A fitting having a hub in the direction opposite to flow shall not be used in the drainage system, unless the pipe is cut by either a saw or snap cutter, which will assure clean, smooth cuts of the pipe. Double sanitary tee pattern fittings shall not receive the discharge of fixtures or appliances with pumping action discharge.

D. Heel or Side Inlet Bend Prohibited. Heel or side inlet quarter bend fittings shall not be used in the drainage or vent system.

F. Obstruction to Flow. A fitting or connection which offers abnormal obstruction to flow shall not be permitted. See §715.

G. Increasers and Reducers. Where different sizes of pipes or pipes and fittings are to be connected, the proper size increasers or reducers or reducing fittings shall be used between the two sizes.

AUTHORITY NOTE: Promulgated in accordance with R.S. 40:4(A)(7) and R.S. 40:5(2)(3)(7)(9)(16)(17)(20).

HISTORICAL NOTE: Promulgated by the Department of Health and Hospitals, Office of Public Health, LR 38:

§313. Types of Joints

A. Tightness. Joints and connections in the plumbing system shall be gastight and watertight for the pressure required by test, with the exceptions of those portions of perforated or open-joint piping which are installed for the purpose of collecting and conveying ground or seepage water to the underground storm drains.

B. Threaded Joints. Threaded joints shall conform to ASME B 1.20.1. All burrs shall be removed, pipe ends shall be reamed or filed out to size of bore, and all chips shall be removed. Pipe-joint cement and sealing compound shall be used only on male threads and be insoluble and nontoxic. All pipe-joint sealants for use on potable water piping shall be listed and labeled by an approved testing laboratory.

C. Wiped Joints. Joints in lead pipe or fittings, or between lead pipe or fittings and brass or copper pipe, ferrules, solder nipples, or traps, shall be full-wiped joints. Wiped joints shall have an exposed surface on each side of a joint not less than 3/4-inch (19.1 mm) and at least as thick as the material being jointed. Wall or floor flange lead-wiped joints shall be made by using a lead ring or flange placed behind the joints at wall or floor. Joints between lead pipe and cast iron or steel shall be formed by means of a caulking ferrule, soldering nipple, or bushing.

D. Flexible Couplings. Flexible couplings may be used to join plain ends of similar or dissimilar pipes and the flexible coupling shall consist of an approved gasket that is attached to the pipe with special adjustable stainless steel clamps and bolts (see §711.D). The flexible couplings and the approved gasket shall be oil resistant.

E. Precast Joints. Precast collars shall be formed on the spigot and in the bell of the pipe in advance of use. Materials shall be resistant to acids, alkalies and oils, and precast joints shall conform to the requirements of ASTM C 425, and upon installation shall be tested as provided in this Part.

F. Cement Mortar Joints and Connections. The following applies to cement mortar joints and connections.

1. Except for repairs and connections to existing lines constructed with such joints, cement mortar joints are prohibited.

2. Where permitted, cement mortar joints shall be made in the following manner: A layer of jute or hemp shall be inserted into the base of the annular joint space and packed tightly to prevent mortar from entering the interior of the pipe or fitting. Not more than 25 percent of the annular space shall be used for jute or hemp. The remaining space shall be filled in one continuous operation with a thoroughly mixed mortar composed of one part cement and two parts sand, with only sufficient water to make the mixture workable by hand. Additional mortar of the same composition shall then be applied to form a one to one slope with the barrel of the pipe. The bell or hub of the pipe shall be swabbed to remove any mortar or other material which may have found its way into such pipe.

G. Burned Lead Joints. Burned (welded) lead joints shall be lapped and the lead shall be fused together to form a uniform weld at least as thick as the lead being jointed.

H. Joints for Plastic Pipe and Fittings. The following applies to joints for plastic pipe and fittings.

1. ABS and PVC pipe and fittings shall be solvent cemented using the proper cement recommended for the particular materials. All pipe cuts shall be square and both pipe and fittings shall be cleaned of all soil, dirt, oil and grease before applying primer or cement. Solvent joints made for pressure applications shall use primers and cements that are in compliance with the applicable ASTM standards. All solvent joints shall be made in accordance with the applicable ASTM standards and shall be allowed to dry before testing. Should any leak occur on water test, the defective joint shall be replaced. All solvent cements and primers shall comply with requirements of the NSF 14 and shall be labeled to identify the laboratory certifying compliance for the particular cement and primer being used.

2. Plastic pipe and fittings for sewer and water pressure lines may also be joined by use of elastomeric joints when the respective standards for the materials so specify. Joints shall conform to the standards listed in either Table 603 or Table 703, as applicable, for elastomeric joints.

I. Grooved or Plain End Mechanical Couplings and Fittings. Grooved or plain end mechanical couplings and fittings may be used. Pipe is to be prepared in accordance with manufacturer's specifications.

J. Water Supply and Distribution Systems. Additional provisions for water supply and distribution systems are located in §§619 and 621.

K. Sanitary Drainage Systems. Additional provisions for sanitary drainage systems are located in 709.

AUTHORITY NOTE: Promulgated in accordance with R.S. 40:4(A)(7) and R.S. 40:5(2)(3)(7)(9)(16)(17)(20).

HISTORICAL NOTE: Promulgated by the Department of Health and Hospitals, Office of Public Health, LR 38:

§315. Use of Joints

A. Threaded Pipe to Cast Iron. Joints between steel, brass, or copper pipe, and cast iron pipe shall be either caulked or threaded, formed as provided in §§313.B and 709.B, or shall be formed with approved adapter fittings.

B. Lead to Cast Iron or Steel. Joints between lead and cast iron or steel pipe shall be formed by means of wiped joints and a caulking ferrule, soldering nipple, or bushing as provided in §313.C.

C. Connection of Dissimilar Metals. There shall be no commingling of materials except through the use of proper dielectric fittings that make different kinds of metal pipe compatible.

D. Welding or Brazing. Brazing or welding shall be performed in accordance with requirements of recognized published standards of practice and by licensed or otherwise qualified mechanics. All brazing on medical gas systems shall be performed by certified installers meeting the requirements of ASME Boiler and Pressure Vessel Code, Section IX, Welding and Brazing Qualifications, or AWS B 2.2/B 2.2M, Brazing Procedure and Performance Qualification, as referenced in Chapter 14.

E. Slip Joints. In drainage piping, slip joints may be used on both sides of the trap and in the trap seal. Slip joints in water piping may be used on the exposed fixture supply only.

F. Expansion Joints. Expansion joints must be accessible and may be used where necessary to provide for expansion and contraction of the pipes.

G. Mechanically Formed Tee Connections. The following applies to mechanically formed tee connections.

1. Mechanically extracted collars shall be formed in a continuous operation consisting of drilling a pilot hole and drawing out the tube surface to form a collar having a height not less than three times the thickness of the tube wall.

2. The branch shall be notched to conform to the inner curve of the run tube and dimpled to insure that penetration of the branch tube into the collar is of sufficient depth for brazing and that the branch tube does not obstruct the flow in the main line tube.

3. All joints shall be brazed in accordance with 621.D. Soft soldered joints shall not be permitted.

AUTHORITY NOTE: Promulgated in accordance with R.S. 40:4(A)(7) and R.S. 40:5(2)(3)(7)(9)(16)(17)(20).

HISTORICAL NOTE: Promulgated by the Department of Health and Hospitals, Office of Public Health, LR 38:

§317. Anchors, Hangers and Supports

A. General. The following apply to anchors, hangers and supports.

1. Strains and Stresses. Piping in a plumbing system shall be installed without undue strains or stresses and provision shall be made for expansion, contraction, and structural settlement.

2. Material. Anchors, hangers, and supports for pipe shall be of sufficient strength to maintain their proportionate share of the pipe alignment and to prevent sagging. Anchors, hangers or supports shall be of a material which is compatible with the pipe and will not promote galvanic action. Anchors, hangers or supports installed below grade$_{(g)}$ which may come into contact with the soil shall be of a material which is compatible with the type of soil to which it is exposed to prevent the weakening of the device over time due to corrosion, etc.

3. Attachment. Anchors, hangers and supports shall be securely attached to the building construction.

B. Vertical Piping. The following applies to the support of pipes installed vertically.

1. Attachment. Vertical piping shall be secured at sufficiently close intervals to keep the pipe in alignment and carry the weight of the pipe and contents.

2. Cast Iron Soil Pipe. Cast iron soil pipe shall be supported at the base and at each story level at intervals not exceeding 15 ft (4572 mm).

3. Threaded Pipe. Threaded pipe shall be supported at the base and at not less than every other story at intervals not exceeding 30 ft (9144 mm).

4. Copper Tube. Copper tube shall be supported at each story for piping 1 1/2 inches and over and at not more than 4 ft (1219 mm) intervals for piping 1 1/4 inches and smaller.

5. Lead Pipe. Lead pipe shall be supported at intervals not exceeding 4 ft (1219 mm).

6. Plastic Pipe. Plastic piping shall be supported at each story for piping 2 inches or over and not more than 4 foot (1219 mm) intervals for piping 1 1/2 inches or under.

7. Borosilicate Glass Pipe. Borosilicate glass pipe shall be supported at every floor for 3-inch, 4-inch and 6-inch diameter vertical runs and at every other floor for sizes

2 inches and smaller. Padded riser clamps with 1/4-inch (6.35 mm) thick elastomeric padding shall be used, restricting sideward as well as downward movement.

C. Horizontal Piping. The following applies to the support of pipes installed horizontally.

1. Supports. Horizontal piping shall be supported at sufficiently close intervals to keep it in alignment and prevent sagging.

2. Cast Iron Soil Pipe. Cast iron soil pipe shall be supported at not more than 5 ft (1524 mm) intervals on 5 ft (1524 mm) lengths and 10 ft (3048 mm) intervals on 10 ft (3048 mm) lengths. Hangers shall be located as near hubs as possible.

3. Threaded Pipe. Threaded pipe shall be supported at approximate 12 ft (3658 mm) intervals.

4. Copper Tubing. Copper tube shall be supported at approximate 8 ft (2439 mm) intervals for tubing 1-inch and smaller and 10 ft (3048 mm) intervals for tubing 1 1/4 inches and larger.

5. Lead Pipe. Lead pipe shall be supported by strips or otherwise for its entire length.

6. Plastic Pipe. Plastic piping shall be supported at not more than 4 ft (1219 mm) intervals.

7. Borosilicate Glass Pipe. Borosilicate glass pipe shall be supported in horizontal runs every 8 to 10 ft (2438 to 3048 mm), never closer unless there are more than two joints in the 8 to 10 ft (2438 to 3048 mm) section. Padded hangers shall be used, of either the clevis or trapeze type.

D. Repair or Replacement. Piping in concrete or masonry walls or footings shall be placed or installed in chases or recesses which will permit access to the piping for repairs or replacement.

E. Base of Stacks. The following applies to the support and off-loading of the base of soil, waste and vent stacks.

1. Supports. The base of all soil, waste and vent stacks shall be supported to the satisfaction of the plumbing official.

2. Piping Material. Other piping material shall be so anchored as to take the load off the stack at the base.

AUTHORITY NOTE: Promulgated in accordance with R.S. 40:4(A)(7) and R.S. 40:5(2)(3)(7)(9)(16)(17)(20).

HISTORICAL NOTE: Promulgated by the Department of Health and Hospitals, Office of Public Health, LR 38:

§319. Tests

A. Required Tests. The permit holder shall make the applicable tests prescribed in §319.B thru §319.E to assure compliance with the provisions of this Part. The permit holder shall give reasonable advance notice to the plumbing official when the plumbing work is ready for tests. The equipment, material, power, and labor necessary for the inspection and test shall be furnished by the permit holder and he is responsible for assuring that the work will withstand the test pressure prescribed in the following tests. All the piping of the plumbing system shall be tested with either water or air. After the plumbing fixtures have been set and their traps filled with water, the entire drainage system shall be submitted to final tests. The plumbing official may require the removal of any cleanouts to ascertain if the pressure has reached all parts of the system.

B. Drainage and Vent Tests. The following applies to the testing of drainage and vent systems.

1. A water test shall be applied to the drainage system and vent system either in its entirety or in sections. If applied to the entire system, all openings in the piping shall be tightly closed, except the highest opening, and the system shall be filled with water to point of overflow. If the system is tested in sections, each opening shall be tightly plugged except the highest openings of the section under test, and each section shall be filled with water, but no section shall be tested with less than 10 ft head of water [29.9 kilopascal (kPa)]. In testing successive sections at least the upper 10 ft (3048 mm) of the next preceding section shall be tested, so that no joint or pipe in the building (except the uppermost 10 ft (3048 mm) of the system) shall have been submitted to a test of less than a 10 ft head of water (29.9 kPa). The water shall be kept in the system, or in the portion under test, for at least 15 minutes before inspection starts; the system shall then be tight at all points.

2. An air test shall be made by attaching an air compressor or testing apparatus to any suitable opening and, after closing all other inlets and outlets to the system, forcing air into the system until there is a uniform gage pressure of 5 psi (34.5 kPa) or sufficient to balance a column of mercury 10 inches in height (33.8 kPa). This pressure shall be held without introduction of additional air for a period of at least 15 minutes.

a. Exception. Cast iron soil pipe joined with compression gaskets or mechanical couplings shall be tested with 6 psi (41.4 kPa) of air and allowed a 1 psi (6.9 kPa) reduction in pressure or a 2-inch (50.8 mm) drop in the column of mercury in a 15 minute period.

3. The final test of the completed drainage and vent system shall be visual and in sufficient detail to assure that the provisions of this Part have been complied with, provided, however, that, for cause, it may be necessary to subject the plumbing to either a smoke or peppermint test. Where the smoke test is preferred, it shall be made by filling all traps with water and then introducing into the entire system a pungent, thick smoke produced by one or more smoke machines. When the smoke appears at stack openings on the roof, they shall be closed and a pressure equivalent to a 1-inch water column [248.8 Pascal (Pa)] shall be maintained for 15 minutes before inspection starts. Where the peppermint test is preferred, 2 oz (59 mL) of oil of peppermint shall be introduced for each stack.

C. Test of Water Distribution System. Upon the rough-in completion of a section of or the entire water distribution system [e.g., before closing the wall in and, for example, after capping and crimping a copper piping system, after plugging and sealing approved plastic piping such as CPVC, PEX, etc.], it shall be tested and proved tight under a water pressure not less than 200 psi (1379 kPa) for at least 15 minutes. The water used for tests shall be obtained from a potable source of supply.

D. Test of Building Sewer. The following applies to the testing of the building sewer.

1. Gravity sewer tests shall consist of plugging the end of the building sewer at the point of connection with the sewerage system, filling the building sewer with water, testing with not less than a 10 ft (3048 mm) head of water and maintaining such pressure until backfill is completed.

2. Forced sewer tests shall consist of plugging the end of the building sewer at the point of connection with the sewerage system and applying a pressure of 5 psi (34.5 kPa) greater than the pump rating, and maintaining such pressure until backfill is completed.

E. Test of Interior Leaders or Downspouts. Leaders or downspouts and branches within a building shall be tested by water or air in accordance with §319.B.1 or §319.B.2.

F. Backflow Prevention Devices. Backflow prevention devices shall be tested in accordance with ASSE Series 5000, USC's FCCC & HR's "*Manual of Cross-Connection Control*", or UFL's TREEO's "*Backflow Prevention - Theory and Practice*".

1. The test gauge used in testing backflow prevention devices shall be calibrated at a frequency of at least every 12 months by a factory authorized laboratory to an accuracy of ±0.2 pounds per square inch differential (psid) (1.378 kPa) for increasing and decreasing pressure differential pressure readings over the scale of 1.0 psid to 15 psid (6.9 kPa to 103.4 kPa). The gauge shall be tested for accuracy in the vertical position with water and at different inlet pressures.

a. The reference source(s) used to verify accuracy shall have a maximum permissible error of ±0.05 psig (0.344 kPa). Such reference source(s) shall have their calibration traceable to the National Institute of Standards and Technology (NIST).

AUTHORITY NOTE: Promulgated in accordance with R.S. 40:4(A)(7) and R.S. 40:5(2)(3)(7)(9)(16)(17)(20).

HISTORICAL NOTE: Promulgated by the Department of Health and Hospitals, Office of Public Health, LR 38:

§321. Additional General Provisions

A. Additional general provisions are contained in:

1. Chapter 13 - Medical Facilities Plumbing Systems;

2. Chapter 15 - Travel Trailers and Travel Trailer Parks; and,

3. Chapter 17 - Mobile/Manufactured Homes and Mobile/Manufactured Home Parks.

AUTHORITY NOTE: Promulgated in accordance with R.S. 40:4(A)(7) and R.S. 40:5(2)(3)(7)(9)(16)(17)(20).

HISTORICAL NOTE: Promulgated by the Department of Health and Hospitals, Office of Public Health, LR 38:

Chapter 4. Plumbing Fixtures

§401. General

A. Scope. The provisions of this Chapter shall govern the materials, design, installation, and quality of plumbing fixtures.

B. Prohibited Fixtures. Pan, valve, plunger, offset, washout, latrine, frostproof and other water closets having an invisible seal or an unventilated space or having walls which are not thoroughly washed at each discharge, and floor type trough urinals shall be prohibited. Any water closet which might permit siphonage of the contents of the bowl back into the tank shall be prohibited (for example, low down tank type water closets, etc.).

C. Concealed Slip-Joint Connections. Fixtures having concealed slip-joint connections shall be provided with an access panel or utility space so arranged as to make the slip connections accessible for inspection and repair.

D. Limited Access to Waste and Overflow Fittings. When access to waste and overflow fittings cannot be provided as required for slip-joints in Subsection C of this Section or when bathtubs are set head-to-head, joints complying with §621.B may be used. In such limited access cases, waste and overflow shall be of the straight- through type with overflow connecting to the tee branch which will allow the fixture, drain, and trap to be cleaned without disturbing concealed joints. Connections shall be inspected prior to concealment.

AUTHORITY NOTE: Promulgated in accordance with R.S. 40:4(A)(7) and R.S. 40:5(2)(3)(7)(9)(16)(17)(20).

HISTORICAL NOTE: Promulgated by the Department of Health and Hospitals, Office of Public Health, LR 38:

§403. Installation

A. Cleaning. Plumbing fixtures shall be installed in a manner to afford easy access for cleaning. Where practical, all pipes from fixtures shall be run to the nearest wall.

B. Joints. Where a fixture comes in contact with a wall or floor, the joint shall be watertight.

C. Wall-Hung Bowls. Wall-hung water closet bowls shall be rigidly supported by a concealed metal supporting member so that no strain is transmitted to the closet connection.

D. Setting. Fixtures shall be set level and in proper alignment with reference to adjacent walls. No water closet or bidet shall be set closer than 15 inches (381 mm) from its center to any side wall or partition nor closer than 30 inches (762 mm) center-to-center with adjacent fixtures. No urinal shall be set closer than 12 inches (305 mm) from its center to any side wall or partition nor closer than 24 inches (610 mm) center-to-center with adjacent urinal fixtures (see §713). There shall be a minimum of 21 inches (533mm) of clearance provided between the front of the water closet, lavatory or bidet to any wall, fixture or door.

E. Sanitation. All public toilet room floor surfaces shall be of non-absorbent, impervious material.

AUTHORITY NOTE: Promulgated in accordance with R.S. 40:4(A)(7) and R.S. 40:5(2)(3)(7)(9)(16)(17)(20).

HISTORICAL NOTE: Promulgated by the Department of Health and Hospitals, Office of Public Health, LR 38:

§405. Location of Fixtures

A. Ventilation and Lighting. The following applies to the ventilation and lighting requirements where plumbing fixtures are installed:

1. Means of Ventilation. Every restroom, bathroom or water closet combination shall be provided with ventilation by one or more operable windows opening to the outside of the building, by mechanical exhaust or by other means approved by the administrative authority.

a. Window Opening. When an operable window opening to the outside of the building is used for ventilation, an insect mesh screen shall be installed on such opening.

b. Mechanical Exhaust. Public restrooms, bathrooms or water closet combinations shall be provided with ventilation by mechanical exhaust. When separate facilities for employees or staff of food service establishments, markets and retail food stores are provided, such facilities shall also be provided with ventilation by mechanical exhaust.

i. All restrooms, bathrooms and water closet combinations which are ventilated by mechanical exhaust shall have fixed openings from adjacent room or corridors or from other approved sources, large enough to provide a sufficient inflow of air to make exhaust ventilation effective.

ii. Ventilation ducts from restrooms, bathrooms and water closet combinations shall be exhausted to the outside air or be connected into an independent system that exhausts to the outside air.

2. Combustion Chambers. The combustion chambers of all heaters, heating systems and other fired equipment shall be vented to the atmosphere. Other parts of the heating, cooling and ventilating system shall be so designed, built and maintained as to ensure that the pressure in the space from which combustion air is drawn does not become negative with respect to the atmosphere.

3. Illumination Level. Artificial lighting shall be installed in every restroom, bathroom or water closet combination sufficient to provide an illumination level of at least 10 foot-candles, measured 3 feet off of the floor.

4. Enclosures. Where a water closet is completely enclosed in a room or by walls, such enclosure shall be separately ventilated and lighted.

B. Improper Location. Piping, fixtures or equipment shall not be located in such a manner as to interfere with the normal operation of windows, doors or other exit openings. Toilet rooms for public use shall not open directly into a room for the preparation of food for service to the public.

C. Toilet Facilities for Construction Workers. Toilet facilities, of the type and in the quantity approved by the administrative authority or, in lieu thereof, in accord with the Minimum Requirements for Sanitation in Places of Employment (ANSI Z 4.1), shall be provided and maintained in a sanitary condition for the use of workmen during construction.

AUTHORITY NOTE: Promulgated in accordance with R.S. 40:4(A)(7) and R.S. 40:5(2)(3)(7)(9)(16)(17)(20).

HISTORICAL NOTE: Promulgated by the Department of Health and Hospitals, Office of Public Health, LR 38:

§407. Materials and Performance Standards

A. Plumbing fixtures shall be constructed from approved materials, have smooth impervious surfaces, be free from defects and concealed fouling surfaces. Except as permitted elsewhere in this Part, plumbing fixtures and appurtenances shall conform to the standards listed in Table 407.

Table 407
General Fixtures and Accessories

Materials	Standards
Fixture Fittings	ASME A112.18.1, CSA B125.1
Fixture Fittings, Backflow Protection Devices and Systems	ASME A112.18.3
Fixture Waste Fittings	ASME A112.18.2, CSA B125.2
Flexible Water Connectors (prohibited for use in instances when the supply temperature will exceed 150ºF)	ASME A112.18.6, CSA B125.6
Fixtures, Enameled Cast Iron and Steel Plumbing	ASME A112.19.1, CSA B45.2
Fixtures, Non-Vitreous Ceramic (Fireclay)	ASME A112.19.9M
Fixtures, Ceramic Plumbing	ASME A112.19.2, CSA B45.1
Fixtures, Hydraulic Performance for Water Closets and Urinals	ASME Al12.19.6
Fixtures, Stainless Steel Plumbing	ASME A112.19.3, CSA B45.4
Fixtures, Porcelain Enameled Formed Steel Plumbing	ASME A112.19.4M
Fixtures, Plumbing (for) Land Use, including Fixtures for Medical and Dental Facilities	FS WW-P-541 E/GEN(1)
Lead, Caulking	FS QQ-L-156
Macerating Toilet Systems	ASME A 112.3.4
Plastic Bathtub and Shower Units	ANSI Z124.1.2
Plastic Lavatories	ANSI Z124.3
Plastic Sinks	IAPMO Z124.6
Plastic Water Closet Bowls and Tanks	ANSI Z124.4
Trim for Water Closet Bowls, Tanks and Urinals	ASME A112.19.5
Vitreous China Nonwater Urinals	ASME A112.19.19
Water Hammer Arresters	ASSE 1010

AUTHORITY NOTE: Promulgated in accordance with R.S. 40:4(A)(7) and R.S. 40:5(2)(3)(7)(9)(16)(17)(20).

HISTORICAL NOTE: Promulgated by the Department of Health and Hospitals, Office of Public Health, LR 38:

§409. Water Conservation

A. Plumbing fixtures and plumbing fixture fittings shall conform to the following requirements.

1. New or replacement water closets, urinals, sink faucets, lavatories or shower heads shall not be installed with a flow rate or flush volume in excess of the maximum specified in Table 409, when tested in accordance with the provisions of the applicable ASME Standard listed in Table 407.

Table 409
Maximum Allowable
Water Usage For Plumbing Fixtures[1]

Fixture	Max Usage
Lavatory, private	2.2 gpm at 60 psi
Lavatory, public (metering)[2]	0.26 gallons per metering cycle
Lavatory, public (other than metering)	0.5 gpm at 60 psi
Shower Head/ Handheld Shower	2.5 gpm at 60 psi
Sink Faucet	2.2 gpm at 60 psi
Urinals	1.0 gal/flushing cycle
Water Closet	1.6 gal/flushing cycle
1 gallon per minute (gpm) = 0.0631 L/s 1 gallon = 3.7854 L	

NOTES:

1. Maximum allowable water usage for plumbing fixtures and fixture fittings not listed in this table should conform to the applicable ANSI or ASME standard listed in Table 407. Blowout fixtures, vegetable sprayers, clinical sinks, service sinks, hose bibbs and emergency showers sinks shall be exempted from these limitations.

2. Self-closing metering faucets shall be installed on lavatories intended to serve the transient public, such as those in, but not limited to, service stations, train stations, airports, restaurants, and convention halls. Self-closing metering faucets used on lavatories or other hand-washing fixtures shall provide a flow of water for at least 15 seconds without the need to reactivate the faucet. Self-closing faucets which are designed to close immediately upon the release of the handle are prohibited for use on lavatories or other type of hand-washing fixtures.

2. Nonwater Urinals. Nonwater urinals shall be listed and comply with the applicable standard(s) referenced in Table 407. Nonwater urinals shall have a barrier liquid sealant to maintain a trap seal. Nonwater urinals shall permit the uninhibited flow of waste through the urinal to the sanitary drainage system. Nonwater urinals shall be cleaned and

maintained in accordance with the manufacturer's instructions after installation. Where nonwater urinals are installed they shall have a water distribution line roughed-in above each urinal location to allow for the installation of approved water-use type urinals in the event of a retrofit.

AUTHORITY NOTE: Promulgated in accordance with R.S. 40:4(A)(7) and R.S. 40:5(2)(3)(7)(9)(16)(17)(20).

HISTORICAL NOTE: Promulgated by the Department of Health and Hospitals, Office of Public Health, LR 38:

§411. Minimum Plumbing Fixtures

A. General. The following general requirements are to be used when applying Table 411.

1. Restroom Plumbing Fixtures. Notwithstanding the provisions of LAC 51:I.123.A.2, in new construction, substantial renovation or building additions and in changes of occupancy classification or real property ownership, at least the minimum type(s) of rest room plumbing fixtures provided for in this Section shall be installed, and the minimum number of each type of restroom plumbing fixture shall be in accordance with Table 411. The term "substantial renovation" as used in this Paragraph includes, but is not limited to, a renovation/operational change which would trigger the need, pursuant to the requirements of Table 411, for additional restroom plumbing fixtures to be installed, even if the occupancy classification itself may not have changed.

a. Exception

i. When only a real property ownership change occurs, restroom plumbing fixture upgrades to meet the minimum plumbing fixture requirements contained in this Section and Table 411 are not to be blindly enforced if the state health officer/Office of Public Health has assurances that the prior or existing business held a food permit (*e.g.*, grocery store, restaurant, etc.) under LAC 51:XXIII and the prospective new business owner agrees, in writing to the state health officer/Office of Public Health, to operate the business in exactly the same manner as the prior or existing business owner (e.g., parents sell a business to their children who will operate the business in exactly the same manner) and there have been no documented complaints, within the past 5 years, about:

(a). a lack of toilet room fixtures;

(b). urination in non-restroom fixtures or floor areas within the building; or,

(c). urination on the outside of the building or the premises or adjoining lots or areas, etc.

ii. This exception to the normal enforcement procedures (see §411.A.1) shall not be applicable when a serious health threat to the public exists.

2. Non-Restroom Plumbing Fixtures. Where the construction of buildings and facilities was approved by the state health officer pursuant to Sanitary Code (LAC 51) requirements then in effect, upgrading of such buildings and facilities to comply with the non-restroom plumbing fixture requirements of Table 411 shall not be required except where:

a. substantial renovation or building additions are undertaken, or

b. where the occupant or real property ownership thereof or the occupancy classification located therein changes subsequent to the effective date hereof, or

c. where a serious health threat to the public health exists, unless otherwise specifically provided hereinafter.

3. The term "substantial renovation" as used in §411.A.2 includes, but is not limited to, a renovation/operational change which would trigger the need, pursuant to the requirements of Table 411, for additional non-restroom plumbing fixtures to be installed, even if the occupant or the occupancy classification itself may not have changed.

4. Except as may be otherwise specifically noted within Table 411, the number of occupants of a building shall be determined by the square feet (sq ft) of usable floor space. In determining the usable floor space, the square foot area of permanent structural building components, food service establishment kitchens, toilet rooms, corridors, stairways, vertical shafts and equipment rooms, when necessary for the operation of building utilities only, may be deducted from the total aggregate floor area.

5. Tenancies, rental units or other usable areas within a building when separated from the required toilet facilities by walls or partitions without common access openings (*i.e.*, openings through interior walls or partitions that allow access to the toilet facilities) shall be considered independently from the remainder of the building and shall be provided with separate facilities in accordance with this Chapter regardless of the type of occupancy.

6. In self-storage (mini-warehouse) complexes, facilities shall not be required in each building, but shall be located at the office or entrance and such that the plumbing official determines the intent of the code is satisfied (see Paragraphs 7 and 8 of this Subsection).

7. In applying the schedule of facilities recorded in Table 411, consideration must be given to the accessibility of the fixtures. Conformity purely on a numerical basis may not result in an installation suitable to the need of the individual establishment. For example, multi-storied buildings shall be provided with toilet facilities on each floor based upon the population of the floor.

8. Every building and each subdivision thereof intended for public use shall be provided with facilities in accordance with this Chapter. Required facilities shall be directly accessible to the public through direct openings or corridors from the area or areas they are intended to serve. Access to the required toilet facilities for customers shall not pass through areas designated as for employee use only such as kitchens, food preparation areas, storage rooms, closets or similar spaces. Toilet facilities accessible only to private offices shall not be counted to determine compliance with this Chapter. Required facilities shall be free and designated by legible signs for each sex. Pay facilities maybe installed when in excess of the required minimum facilities.

9. The toilet room entry door shall not be lockable by a user of the facilities when such room contains multiple water closets (or water closet and urinal fixtures) and the fixtures provided therein are required to meet the minimum number of plumbing fixtures required in accordance with Table 411.

10. The "Persons (total)" column included in Table 411 is based upon a 50 percent male to 50 percent female ratio.

Table 411
Minimum Plumbing Fixtures[1]

Building or Occupancy[2]	Occupant Content[2]	Water Closets[3]	Lavatories[4]	Bathtubs, Showers and Miscellaneous fixtures
Dwelling or Apt. House	Not Applicable	1 for each dwelling or dwelling unit	1 for each dwelling or dwelling unit	Washing machine connection per unit[5]. Bathtub or shower – one per dwelling or dwelling unit. Kitchen sink – one per dwelling or dwelling unit
Schools: Licensed Pre-School, Day Care or Nursery[28]	Maximum Daily Attendance	Children (total) — Fixtures Age 0 – 4 years 1-20: 1 21-40: 2 41-80: 3 For each additional 40 children over 80, add: 1 Age 5 years and above Male / Female 1-40: 1 / 1 41-80: 1 / 2 81-120: 2 / 3 121-160: 2 / 4 For each additional 40 females over 160, add: 1 For each additional 80 males over 160, add: 1	To be provided in the same proportions as the number of water closets required Kitchen: 1 in each food preparation and utensil washing area located to permit convenient use by all food and utensil handlers. Caring for Infants: 1 in or adjacent to each diaper changing area but never to be located in a food preparation/storage or utensil washing area.	Kitchen: Children (total) — 3 compartment sink (or approved domestic or commercial dishwashing machine and a 2 compartment sink)[18] 7-15 16 – up — 3 compartment sink (dishwashing machine, if provided, must be a commercial type)[18] One laundry tray, service sink, or curbed cleaning facility with floor drain on premises for cleaning of mops/mop water disposal Caring for Infants: One extra laundry tray, service sink, or similar fixture is required to clean and sanitize toilet training potties immediately after each use. Such fixture shall be dedicated solely for this purpose and shall not be in the food preparation/storage, utensil washing, or dining areas.
Schools: Elementary & Secondary	Maximum Daily Attendance	Persons (total) — Male — Female 1-50: 2 / 2 51-100: 3 / 3 101-150: 4 / 4 151-200: 5 / 5 For each additional 50 persons over 200, add: 1 / 1	Persons (total) — Male — Female 1-120: 1 / 1 121-240: 2 / 2 For each additional 120 persons over 240, add: 1 / 1	Drinking Fountains One drinking fountain for each 3 classrooms, but not less than one each floor - -
Office[6] and Public Buildings[22]	100 sq ft per person	Persons (total) — Male — Female 1-15: 1 / 1 16-35: 1 / 2 36-55: 2 / 2 56-100: 2 / 3 101-150: 3 / 4 For each additional 100 persons	Persons (total) — Male — Female 1-15: 1 / 1 16-35: 1 / 2 36-60: 2 / 2 61-125: 2 / 3 For each additional 120 persons over 125, add: 1 / 1.5[7]	Drinking Fountains Persons — Fixtures 1-100: 1 101-250: 2 251-500: 3 No less than one fixture each floor subject to access.

Table 411
Minimum Plumbing Fixtures[1]

Building or Occupancy[2]	Occupant Content[2]	Water Closets[3]			Lavatories[4]			Bathtubs, Showers and Miscellaneous fixtures	
		over 150, add	1	1.5[7]					
Common toilet facilities for areas of commercial buildings of multiple tenants[8,9,27]	Use the sq ft per person ratio applicable to the single type occupancy(s) occupying the greatest aggregate floor area (Consider separately each floor area of a divided floor)	Persons (total)	Male	Female	Persons (total)	Male	Female	Drinking Fountains Persons	Fixtures
		1-50	2	2	1-15	1	1	1-50	1
		50-100	3	3	16-35	1	2	101-250	2
		101-150	4	4	36-60	2	2	251-500	3
		For each additional 100 persons over 150, add	1	1.5[7]	61-125	2	3	501-1000	4
					For each additional 120 persons over 125, add	1	1.5[7]	Not less than one fixture each floor subject to access.	
Retail Stores [6,20,23]	200 sq ft per person	Persons (total)	Male	Female	Persons (total)	Male	Female	Drinking Fountains Persons	Fixtures
		1-35	1	1	1-35	1	1	1-100	1
		36-55	1	2	36-55	1	2	101-250	2
		56-80	2	3	56-80	2	3	251-500	3
		81-100	2	4	81-100	2	4	501-1000	4
		101-150	2	5	101-150	2	5	Not less than one fixture each floor subject to access.	
		For each additional 200 persons over 150, add	1	1.75[7]	For each additional 200 persons over 150, add	1	1.75[7]	All Retail Food Markets: One laundry tray, service sink, or curbed cleaning facility with floor drain on premises for cleaning of mops/mop water disposal.	
					Retail Food Markets that also processes or packages meat or other food items: 1 lavatory in each food processing, packaging, and utensil washing area located to permit convenient use by all food and utensil handlers			Retail Food Markets that also processes or packages meat or other food items: 3 compartment sink[18]	
Restaurants/Food Service Establishments[6,17,23]	30 sq ft per person	Persons (total)	Male	Female	Persons (total)	Male	Female	Drinking Fountains[24] Persons	Fixtures
		1-50	1	1	1-150	1	1	1-100	1
		51-100	2	2	151-200	2	2	101-250	2
		101-200	3	3	201-400	3	3	251-500	3
		201-300	4	4	For each additional 200 persons over 400, add	1	1	Kitchen: 3 compartment sink (dishwashing machine, if provided, must be a commercial type)[18]	
		For each additional 200 persons over 300, add	1	2				Other Fixtures: One laundry tray, service sink, or curbed cleaning facility with floor drain on premises for cleaning of mops/mop water disposal.	
					Kitchen: 1 lavatory in each food preparation and utensil washing area located to permit convenient use by all food and utensil handlers				
Clubs, Lounges, and Restaurants/ Food Service Establishments with Club, or Lounge[17,23]	30 sq ft per person	Persons (total)	Male	Female	Persons (total)	Male	Female	Drinking Fountains[24] Persons	Fixtures
		1-25	1	1	1-150	1	1	1-100	1
		26-50	2	2	151-200	2	2	101-250	2
		51-100	3	3	201-400	3	3	251-500	3
		101-300	4	4				501-1000	4
		For each additional 200 persons over 300, add	1	2	For each additional 200 persons over 400, add	1	1	Bar: 3 compartment sink (dishwashing machine, if provided, must be a commercial type)[18]	
					Bar: 1 lavatory in each drink preparation area and utensil washing area located to permit convenient use by all drink and utensil handlers.			Other Fixtures: One laundry tray, service sink, or curbed cleaning facility with floor drain on premises for cleaning of mops/mop water disposal.	
Do it yourself Laundries[6]	50 sq ft per person	Persons (total)	Male	Female	Persons (total)	Male	Female	One drinking fountain and one service sink.	
		1-50	1	1	1-100	1	1		
		51-100	1	2	101-200	2	2		

Table 411
Minimum Plumbing Fixtures[1]

Building or Occupancy[2]	Occupant Content[2]	Water Closets[3]			Lavatories[4]			Bathtubs, Showers and Miscellaneous fixtures
Beauty Shops, Barber shops, nail Salons, and Tanning Facilities[6]	50 sq ft per person	Persons (total)	Male	Female	Persons (total)	Male	Female	One drinking fountain and one service sink or other utility sink.
		1-35	1	1	1-75	1	1	
		36-75	1	2				
Heavy manufacturing[10], warehouses[11], foundries, and similar establishments[12,13]	Occupant content per shift, substantiated by owner. Also see §411.B.2	Persons (total)	Male	Female	Persons (total)	Male[14]	Female[14]	One drinking fountain for each 75 persons. One shower for each 15 persons exposed to excessive heat or to skin contamination with poisonous, infectious, or irritating material.
		1-10	1	1	1-15	1	1	
		11-25	2	1	16-35	2	1	
		26-50	3	1	36-60	3	1	
		51-75	4	1	61-90	4	1	
		76-100	5	1	91-125	5	1	
		For each additional 60 persons over 100, add	1	0.1[7]	For each additional 100 persons over 125, add	1	0.1[7]	
Light manufacturing[10], Light Warehousing[11], and workshops, etc.[12,13]	Occupant content per shift, substantiated by owner. Also see §411.B.2	Persons (total)	Male	Female	Persons (total)	Male[14]	Female[14]	One drinking fountain for each 75 persons. One shower for each 15 persons exposed to excessive heat or to skin contamination with poisonous, infectious, or irritating material.
		1-25	1	1	1-35	1	1	
		26-75	2	2	36-100	2	2	
		76-100	3	3	101-200	3	3	
		For each additional 60 persons over 100, add	1	1	For each additional 100 persons over 200, add	1	1	
Dormitories[15]	50 sq ft per person (calculated on sleeping area only)	Persons (total)	Male[16]	Female[16]	Persons (total)	Male	Female	One drinking fountain for each 75 persons. Washing machine may be used in lieu of laundry trays.[15] One shower or bathtub for each 8 persons. Over 150 persons add 1 shower or bathtub for each 20 persons.
		1-10	1	1	1-12	1	1	
		11-30	1	2	13-30	2	2	
		31-100	3	4	For each additional 30 persons over 30, add	1	1	
		For each additional 50 persons over 100, add	1	1				
Places of Public Assembly without seats and Waiting Rooms at Transportation Terminals and Stations	70 sq ft per person (calculated from assembly area.) Other areas considered separately (See Office or Public Buildings)	Persons (total)	Male	Female	Persons (total)	Male	Female	Drinking Fountains Persons — Fixtures
		1-50	2	2	1-200	1	1	1-100 — 1
		51-100	3	3	201-400	2	2	101-350 — 2
		101-200	4	4	401-750	3	3	
		201-400	5	5	Over 750 persons, lavatories for each sex shall be required at a number equal to not less than 1/2 of total of required water closets and urinals for each sex.			Over 350 add one fixture for each 400.
		For each additional 250 persons over 400, add	1	2				
Theaters, Auditoriums, Stadiums[21], Arenas[21], and Gymnasiums[26]	Use the number of seats as basis	Persons (total)	Male	Female	Persons (total)	Male	Female	Drinking Fountains Persons — Fixtures
		1-50	2	2	1-200	1	1	1-100 — 1
		51-100	3	3	201-400	2	2	101-350 — 2
		101-200	4	4	401-750	3	3	
		201-400	5	5	Over 750 persons, lavatories for each sex shall be required at a number equal to not less than 1/2 of total of required water closets and urinals for each sex.			Over 350 add one fixture for each 400.
		For each additional 250 persons over 400, add	1	2				
Churches, Mosques, Synagogues, Temples, and other places of Worship[26]	Use the number of seats as basis	Persons (total)	Male	Female	Persons (total)	Male	Female	Drinking Fountains Persons — Fixtures
		1-70	1	1	1-200	1	1	1-100 — 1
		71-150	2	2	201-400	2	2	101-350 — 2
		151-500	3	3	401-750	3	3	
		For each additional			Over 750 persons, lavatories for each sex			Over 350 add one fixture for each 400.

Table 411 Minimum Plumbing Fixtures[1]									
Building or Occupancy[2]	**Occupant Content[2]**	**Water Closets[3]**			**Lavatories[4]**			**Bathtubs, Showers and Miscellaneous fixtures**	
		500 persons over 500, add	1	1	shall be required at a number equal to not less than 1/2 of total of required water closets and urinals for each sex.				
Retail Fuel Stations (Along an Interstate highway when the station property is located within 1/2 mile of the nearest toe[25] of the exit/entrance ramp)[23]	Use the number of Fueling Points[19] as the basis							Drinking Fountains	
		Fueling Points	Male	Female	Fueling Points	Male	Female	Fueling Points	Fixtures
		1-8	1	1	1-12	1	1	1-12	1
		9-12	2	2	13 or more	1	2	13 or more	2
		13 or more	2	3					
Retail Fuel Stations not meeting above criteria[23]	Use the number of Fueling Points[19] as the initial basis							Drinking Fountains	
		Fueling Points	Male	Female	Fueling Points	Male	Female	Fueling Points	Fixtures
		1 or more	1	1	1 or more	1	1	1 or more	1
Other Miscellaneous Buildings or Occupancies[29]									

NOTES:

1. The figures shown are based upon one fixture being the minimum required for the number of persons indicated or any fraction thereof, i.e., if the calculation yields any fraction (no matter how small), the next whole number greater than the fractional number is the minimum fixture requirement.

2. The occupant content and the number of required facilities for occupancies other than listed shall be determined by the plumbing official. Plumbing facilities in the occupancies or tenancies of similar use may be determined by the plumbing official from this table.

3. Urinals can be substituted for up to half of the required water closets.

4. Twenty-four linear inches (610 mm) of wash sink or 18 inches (457 mm) of a circular basin, when provided with water outlets for such space, shall be considered equivalent to 1 lavatory. In accordance with LAC 51:XVII.109.B, the minimum number of required public or public use lavatories/hand-washing fixtures shall be located within the toilet room.

5. When central washing facilities are provided in lieu of washing machine connections in each living unit, central facilities shall be located for the building served at the ratio of not less than one washing machine for each 12 living units, but in no case less than two machines for each building of 15 living units or less. See §415.E.2.b.

6. With the exception of retail stores associated with retail fuel stations and/or restaurant/food service establishments associated with retail fuel stations and retail stores that require 2 or more different food permits (see note #20 below), a single facility consisting of one water closet and one lavatory may be used by both males and females in the following occupancies subject to the building area limitations:

Occupancy	Total Building Area (sq ft)
Office	1200
Retail Store (within covered mall)	3500
Laundries (Self-Service)	1400
Beauty Shops, Barber Shops, Tanning Facilities, and Nail Salons	900

Occupancy	Usable Floor Space (sq ft)
Restaurant/Food Service Establishment (excluding retail fuel stations)	500
Retail Store (excluding retail fuel stations)	1500*

* A single facility [normally allowed under Note #6 for a retail store occupancy (excluding retail fuel stations)] does not apply when the conditions of Note #20.a. below exist.

7. After totaling fixtures, round up any fraction to the next highest whole number of fixtures.

8. Common toilet facilities (separate for males and females) for each floor are acceptable in lieu of separate facilities required by this Section only when the applicable building occupant content has common access from within the building. When tenancies, rental units, etc., are to be provided with separate facilities of a partial nature, such facilities are not deductible from the total common facilities required.

9. (a) Applicable to small stand-up restaurants and similar occupancies.

(b) Not applicable to do-it-yourself laundries, beauty shops and similar occupancies where persons must remain to receive personal services.

10. (a) Light manufacturing is applicable to those manufacturers manufacturing finished products which require no special equipment to handle single finished products but may require special equipment to handle the products when packaged in containers containing multiple products,

(b) Heavy manufacturing is applicable to those manufacturing processes requiring overhead cranes or similar equipment for the movement of raw materials and/or the finished products.

11. (a) Light Storage: Light storage is the storage of items which can be handled without the aid of special handling equipment such as cranes, forklifts or similar equipment,

(b) Heavy Storage: Heavy storage is the storage of items which require special equipment for handling such as cranes, forklifts or similar equipment.

12. For other than industrial areas of the occupancy, see other applicable type occupancies (applicable to facilities provided due to inaccessibility of those in main or initial occupancy).

13. As required by the Minimum Requirements for Sanitation in Places of Employment (ANSI Z 4.1).

14. Where there is exposure to skin contamination with poisonous, infectious, or irritating materials, provide 1 lavatory for each 15 persons.

15. Laundry trays, 1 for each 50 persons. Service sinks, 1 for each 100 persons.

16. For exclusively male or female dorms, the fixtures shall be double the amount required for the particular gender in a co-ed dorm.

17. If alcoholic beverages are to be served, facilities shall be as required for clubs or lounges; however, this requirement shall not be construed to require a restaurant/food service establishment which serves alcoholic beverages and consists of 500 square feet or less of usable floor space to add any

more toilet rooms than the minimum required pursuant to Note #6 above (as long as such small restaurant/food service establishment does not have a wet bar and thus would not fall under the "Club, Lounge, and Restaurants/Food Service Establishments with Club, or Lounge" occupancy classification).

18. At the discretion of the plumbing official, one properly sized grease trap for wastewater from the kitchen utensil washing sink(s), dishwashing machine(s), etc., is also required.

19. Fueling point means the number of fueling hoses which may be activated simultaneously while refueling automobiles or other motor vehicles.

20. (a) A retail store which requires two or more different food permits *(e.g.,* Grocery Permit, Restaurant Permit, etc.) under LAC 51:XXIII and has a combined usable floor space of more than 500 square feet shall be required to provide no less than a minimum of two facilities consisting of one water closet and one lavatory each.

(b) A retail store which requires two or more different food permits under LAC 51:XXIII and has a combined usable floor space of 500 square feet or less shall be allowed to operate with a single facility consisting of one water closet and one lavatory used by both males and females. The allowance to operate with a single facility assumes that a wet bar is not located on the premises.

21. (a) Trough urinals may only be used for stadiums, arenas, and jails, prisons, or other institutions of detention or incarceration. Trough urinals, when used, shall conform to the following requirements: They shall not be less than 6 inches deep and shall be furnished with one piece backs and have strainers with outlets at least 1 1/2 inches in diameter. The washdown pipe shall be perforated so as to flush with an even curtain of water against the back of the urinal. This pipe shall be securely clamped as high as practicable to the back of the urinal. Trough urinals, where so equipped, shall have tanks with a flushing capacity of not less than 1 1/2 gallons of water for each 2 feet of urinal length,

(b) Trough urinals shall be figured on the basis of one urinal for each 18 inches of length, provided that: 24-inch urinal equals 1 urinal; 36-inch urinal equals 2 urinals; 48-inch urinal equals 2 urinals; 60-inch urinal equals 3 urinals; and a 72-inch urinal equals 4 urinals,

(c) Privacy screens shall not be required for trough urinals.

22. Applies to educational occupancies above the 12th grade$_{(L)}$.

23. If building is a multi-purpose facility *(i.e.,* a retail fuel station and a retail store, or a retail fuel station and a retail store and a restaurant, or a retail store and retail fuel station, etc.), the occupancy which requires the largest number of fixtures shall apply.

24. Drinking fountain requirement may be waived if drinking water is dispensed in an approved, sanitary manner in accord with the requirements of Part XXIII of the Louisiana State Sanitary Code (LAC 51:XXIII). Minimally, such Part XXIII facility shall hold a health permit from DHH-OPH which requires a 3 compartment sink and a hand wash lavatory in the food preparation area. Any Part XXIII permitted-facility not meeting this requirement [such as grocery store serving pre-packaged food items only (equivalent to a retail store)] shall install a publicly accessible drinking fountain(s).

25. "Toe" is defined as the point where the Interstate highway's exit/entrance ramp meets the intersecting highway.

26. For pew or bench type seating, each 18 inches of pew or bench shall equate to one person.

27. Central facilities shall be installed such that the path of travel to such facilities shall not exceed a distance of 500 feet. The maximum travel distance to the central toilet facilities shall be measured from the main entrance of any store or tenant space.

28. For pre-school children, between the ages of 0-4, fixtures shall be size appropriate for the age of the children being cared for (toilets 11 inches maximum height and lavatories 22 inches maximum height), or if standard size fixtures are used, safe, cleanable step aids shall be provided.

29. Refer to the following Parts of the Louisiana State Sanitary Code (LAC 51) for specific information relative to the number of plumbing fixtures required for these other miscellaneous buildings or occupancies:

Building or Occupancy	Louisiana State Sanitary Code (LAC 51)
Wholesale Seafood Plants (Marine and Freshwater)	Part IX
Campsites	Part XVI
Jails, Prisons and Other Institutions of Detention or Incarceration[21]	Part XVIII
Hospitals, Ambulatory Surgical Centers, Renal Dialysis Centers	Part XIX
Nursing Homes	Part XX
Temporary Food Service (Festivals or Fairs)	Part XXIII, Chapter 47
Swimming Pools	Part XXIV
Mass Gathering Areas	Part XXV

B. Adjustments to Minimum Facilities. When necessary, the following may be utilized to make adjustments to the minimum facilities requirements.

1. The "Persons (total)" column included in Table 411 is based upon a 50 percent male to 50 percent female ratio. The plumbing official may make adjustments in the distribution of facilities between male and female when furnished satisfactory data to substantiate a claim that the numbers of male and female fixtures in Table 411 would not provide a satisfactory ratio of facilities based on the male-female ratio for the ultimate users. In any case, where deviation is permitted, in accordance with this Section, the plumbing official may require additional facilities if the data submitted proves to be in error or if changes are made that affect such data, whether it be by the original or later owner or occupants of the building or tenancy.

2. The plumbing official may make adjustments in the occupant content established by Table 411 when, in a particular case, satisfactory data, accompanied by plans, is furnished which substantiates a claim that the occupant content of a particular building or tenancy will, at all times, be less than provided for in the above table. Approval of such data and accompanying claims shall not prevent the plumbing official from requiring additional facilities based on the above table, should changes be made affecting the data or plan upon which the original approval was based whether such changes be made by the original or ultimate owner or building occupant or occupants. The remainder of the facilities' requirements of §411 are not affected by this paragraph.

C. Facilities' Separation. The occupant content established by this Part shall not be construed to have any force or effect upon the occupant content requirements of the codes adopted under the authority of Act 12 of the 2005 First Extraordinary Session. The occupant content in this Part is established only to calculate the number of plumbing facilities required for a building or for a tenancy within a building when such tenancy is separated from the remainder of the building by walls or partitions or when central facilities would not provide for the satisfactory needs of a tenant's patrons who must remain in a given area to receive the service rendered.

AUTHORITY NOTE: Promulgated in accordance with R.S. 40:4(A)(7) and R.S. 40:5(2)(3)(7)(9)(16)(17)(20).

HISTORICAL NOTE: Promulgated by the Department of Health and Hospitals, Office of Public Health, LR 38:

§413. Fixture Outlets

A. Lavatory Waste Outlets. Lavatories shall have waste outlets not less than 1 1/4-inch diameter. Waste outlets may have open strainers or may be provided with stoppers.

B. Sink Waste Outlets. Sinks shall be provided with waste outlets not less than 1 1/2-inch diameter. Waste outlets may have open strainers or may be provided with stoppers.

C. Strainers and Fixture Outlets. All plumbing fixtures, other than water closets and siphon-action washdown or blowout urinals, shall be provided with strainers having waterway area complying with Table 407.

D. Overflows. The following applies to overflows for plumbing fixtures.

1. Design. When any fixture is provided with an overflow, the waste shall be so arranged that the standing water in the fixture cannot rise in the overflow when the stopper is closed or remain in the overflow when the fixture is empty.

2. Connection. The overflow pipe from a fixture shall be connected on the house or inlet side of the fixture trap, except that overflows of flush tanks may discharge into the water closets or urinals served by them, but it shall be unlawful to connect such overflows with any other part of the drainage system.

AUTHORITY NOTE: Promulgated in accordance with R.S. 40:4(A)(7) and R.S. 40:5(2)(3)(7)(9)(16)(17)(20).

HISTORICAL NOTE: Promulgated by the Department of Health and Hospitals, Office of Public Health, LR 38:

§415. Fixture Types

A. Commercial Dishwashing Machines. The following applies to commercial dishwashing machines.

1. Protection. Commercial dishwashing machines shall meet requirements of §§609 and 807.B.

2. Waste Connection. Each unit may be separately trapped or discharge indirectly into a properly trapped and vented fixture. A commercial dishwashing machine shall not be directly connected to a drainage system. When a commercial dishwashing machine is located within 5 feet of a trapped floor drain, the dishwasher waste outlet may be connected directly on the inlet side of a properly vented floor drain trap.

3. Sanitization. Commercial dishwashing machines shall be installed and operated in accord with the manufacturer's recommendations and with the mechanical cleaning and sanitizing requirements contained within Part XXIII (Eating and Drinking Establishments) of the Louisiana State Sanitary Code (LAC 51:XXIII).

4. Flow Pressure. When spray-type dishwashing machines are used in commercial installations, the pressure measured in the final rinse water line shall be at least 15 psi (103 kPa) and not more than 25 psi (172 kPa) when the final rinse spray is operating. A suitable pressure gauge and gage cock shall be provided in a readily accessible location immediately upstream from the final rinse sprays to permit checking the flow pressure of the final rinse water. If necessary, a permanently installed pressure regulator shall be provided on the final rinse water line in order to maintain the proper water pressure in the line when the final rinse spray is operating.

B. Domestic Dishwashing Machines. The following applies to domestic dishwashing machines.

1. Protection. Domestic dishwashing machines shall meet requirements of §§609 and 807.B.

2. Waste Connection. Each unit may be separately trapped or discharge indirectly into a properly trapped and vented fixture. A domestic dishwashing machine shall not be directly connected to a drainage system. It may be connected through a wye connection into the tail piece of a sink or into the body of a disposal unit with the flexible dishwasher hose looped up to within 2 inches of the bottom of the counter top.

C. Drinking Fountains. The following applies to drinking fountains.

1. Design and Construction. Drinking fountains shall conform to ASME A 112.19.1 or CSA B45.2 if of enameled cast iron or enameled steel; or ASME A 112.19.2 or CSA B45.1 if of ceramic. Mechanically refrigerated drinking fountains shall also conform to ARI 1010. All drinking fountains shall conform to NSF 61.

2. Protection of Water Supply. Stream projectors shall be so assembled as to provide an orifice elevation as specified by ASME A 112.1.2.

3. Prohibited Location. Drinking fountains shall not be installed in public toilet rooms.

4. Minimum Required Separation from Contamination. Drinking fountain fixtures shall provide a minimum of 18 inches of separation from its water outlet (spigot) to any source of contamination. Combination sink/drinking fountain units shall provide a minimum of 18 inches between the drinking fountain water outlet (spigot) and the nearest outside rim of the sink bowl [or other source(s) of contamination].

a. Exception. This 18 inch minimum separation may only be reduced by the use of a vertical shield made of a smooth, easily cleanable surface that is attached flush with the top surface of the unit and extends to a distance at least 18 inches in height above the drinking fountain water outlet (spigot) level.

b. Prohibited Fixture. Combination sink/drinking fountain units which share the same sink bowl are prohibited except in individual prison cells.

5. Minimum Fixture Requirements. Water dispensing type drinking fountains which connect to the potable water distribution system but require the use of an individual cup or container shall be permitted to substitute for not more than 50 percent of the required number of drinking fountains. Bottled water-type dispensers are prohibited from counting toward the minimum required number of drinking fountains.

D. Garbage Can Washers. Garbage can washers shall be separately trapped. The receptacle receiving the wash from garbage cans shall be provided with a removable basket or strainer to prevent discharge of large particles into the building drainage system. Any water supply connection shall be protected against backflow by an air gap (water distribution) or an approved backflow prevention device.

E. Floor Drains. The following applies to floor drains.

1. Installation. The installation of floor drains shall comply with the following.

a. Floor drains shall connect into a trap so constructed that it can be readily cleaned and of a size to efficiently serve the purpose for which it is intended. The

drain inlet shall be located so that it is, at all times, in full view and accessible.

b. Floor drains shall have a minimum 2-inch diameter drain outlet and connect to a trap no less than 2-inches in diameter.

c. Floor drains subject to backflow shall not be directly connected to the drainage system or shall be provided with a backwater valve.

d. Floor drains shall be provided with removable strainers meeting §807.G.2, the open area of which shall be not less than two-thirds of the cross-sectional area of the trap to which it connects.

2. Required Locations. Floor drains shall be installed in the following areas:

a. Floor drains shall be installed in all public toilet rooms, etc., (see definition of Public or Public Use in Chapter 2) and shall be fed (the water seal replenished) by an approved automatic trap priming device meeting the requirements of and installed in accordance with §415.E.4.a, §415.E.4.b or §415.E.4.c.

i. Exceptions

(a). Floor drains are not required in the toilet rooms serving hotel/motel guest rooms or patient rooms of hospitals and nursing homes.

(b). In existing ground floor construction, the addition of floor drains in public toilet rooms is only required when substantial renovation or fixture additions to the public toilet room(s) occurs which requires the concrete slab to be broken or when a serious health threat to the public exists.

b. In public coin operated laundries and in the central washing facilities of apartment buildings or in rooms containing connections for laundry machines except in one and two family dwellings, the rooms containing the laundry machines shall be provided with adequate floor drains located to readily drain the entire floor area. When such floor drains are not embedded in concrete, the floors shall be properly lined as required by §415.I.2 and the required floor drains shall meet the design criteria for shower drains in §415.I.1.

c. Recess rooms located within medical facilities which contain the recessed or concealed portions of sterilizers shall be provided with a minimum of one acceptable floor drain in accordance with §1305.C.2.

d. Each toilet room and laundry room in the service buildings of travel trailer parks shall be provided with a minimum 2-inch floor drain in accordance with §1509.F.

3. Prohibited Locations. The following applies to prohibited locations of floor drains.

a. No floor drain or other plumbing fixture except electric water heaters shall be installed in a room containing air handling machinery when such room is used as a plenum. When rooms are used as a plenum, equipment drains shall be conveyed through an indirect waste receptor located outside such rooms or other approved point of disposal.

b. Floor drains directly connected to the plumbing system shall not be located in elevator pits.

c. No floor drains shall be permitted in food storage areas unless installed in accordance with §807.A.

d. Floor drains are not permitted in walk-in coolers or freezers unless they are provided with indirect connections to the sanitary sewer located outside the walk-in cooler or freezer.

4. Trap Seal Protection. Floor drain or similar traps shall be regularly and automatically fed (the water seal replenished) by the addition of water, liquid waste, or industrial waste (such as the normal and regular operation of a plumbing fixture or condensate waste draining thereto) into the floor drain or, in lieu thereof, shall be protected by the use of:

a. an ASSE 1018 automatic trap priming device (see §625.D);

b. an electronic potable water supply fed trap priming device meeting ASSE 1044 (see §625.D);

c. a drainage type device meeting ASSE 1044 which captures liquid wastes only from:

i. the tail piece of a lavatory;

ii. the discharge side of the atmospheric vacuum breaker located downstream of a flushometer valve servicing a water closet or a clinical sink (the take off point on the discharge pipe must be at least 4" below the critical level of the vacuum breaker); or,

iii. the refill/hush tube of ballcocks (only on ballcocks that utilize an atmospheric vacuum breaker in accordance with the requirements of §609.C.2).

d. an ASSE 1072 listed barrier type floor drain trap seal protection device; or,

e. a combination of the methods listed above, i.e., the use of an ASSE 1072 device in addition to the use of either an ASSE 1018 or ASSE 1044 automatic trap priming device.

F. Food Waste Grinder Units. The following applies to food waste grinder units.

1. Separate Connections. Domestic food waste disposal units may be connected and trapped separately from any other fixture or compartment. Units may have either automatic or hand-operated water-supply control. See §609.

2. Commercial Type Grinders. Food grinders used in commercial buildings shall have an automatic water-supply and shall be provided with not less than 2-inch (51mm) waste line. Each waste line shall be trapped and vented as provided in other Sections of this Part (see §1005.K.1).

G. Laundry Trays. The following applies to laundry trays.

1. Waste Outlets. Each compartment of a laundry tray shall be provided with a waste outlet not less than 1 1/2 inches in diameter.

2. Overflow. Laundry tray overflows shall conform to the requirements of §413.D.

H. Multiple Washsinks. The following applies to multiple washsinks.

1. Circular Type. Each 18 inches (457 mm) of wash sink circumference (circular type), when provided with water outlets for such space, shall be equivalent to one lavatory.

2. Straight-Line Type. Multiple wash sinks of the straight-line type shall have hot and cold combination spouts not closer than 24 linear inches (610 mm) from adjacent

similar spouts and each spout shall be considered the equivalent of one lavatory.

I. Shower Compartments. The following applies to shower compartments.

1. Shower. Shower compartments shall conform to Table 415.I and shall have approved shower pan material or the equivalent thereof as determined by the plumbing official. The pan shall turn up on three sides at least 2 inches (51 mm) above finished curb level. The remaining side shall wrap over the curb. Shower drains shall be constructed with a clamping device so that the pan may be securely fastened to the shower drain thereby making a watertight joint. Shower drains shall have an approved weephole device system to insure constant drainage of water from the shower pan to the sanitary drainage system. There shall be a watertight joint between the shower drain and trap. Shower receptacle waste outlets shall be not less than 2 inches and shall have a removable strainer.

a. Exception. Shower compartments with prefabricated receptors conforming to the standards listed in Table 415.I or special use shower compartments for accessible use which comply with the ANSI A117.1 accessibility standard.

Table 415.I
Prefabricated Shower Receptor Standards

Materials	Standards
Plastic Bathtub and Shower Units	ANSI Z124.1.2
Chlorinated Polyethylene (CPE) Sheeting for Concealed Water-Containment Membrane	ASTM D 4068
Polyvinyl Chloride (PVC) Plastic Flexible Concealed Water-Containment Membrane	ASTM D 4551, see §303.G.7

2. Construction. Floors under shower compartments shall be laid on a smooth and structurally sound base and shall be lined and made watertight with sheet lead, copper or other acceptable materials.

3. Public or Institutional Showers. Floor of public shower rooms shall be drained in such a manner that no waste water from any shower head will pass over floor areas occupied by other bathers.

J. Special Fixtures. The following applies to special fixtures.

1. Water Drain and Connections. Baptistries, ornamental and lily pools, aquaria, ornamental fountain basins and similar constructions when provided with water supplies shall be protected from backsiphonage as required in §609.A and Table 609.F.6.

2. Approval. Specialties requiring water and waste connections shall be submitted for approval of the plumbing official.

3. Accessible Fixtures. Accessible fixtures shall comply with the requirements of ANSI A117.1.

K. Swimming Pools, Spas, and Hot Tubs. The following applies to swimming pools, spas, and hot tubs.

1. Water Circulation System Components. Water circulation system components and disinfectant equipment for swimming pools, spas or hot tubs shall meet the requirements of NSF 50. [For other swimming pool and spa requirements, also see Part XXIV (Swimming Pools) - Louisiana State Sanitary Code (LAC 51:XXIV)]

2. Suction Fittings. Suction fittings shall conform to ASME A 112.19.8 or APSP 16. Public, Residential Spas shall comply with the standards listed in Table 415.K.

Table 415.K
Public and Residential Spas Standards

Materials	Standards
Public Spas	APSP-2
Residential Spas, Permanently Installed	APSP-3
Residential Spas, Portable	APSP-6

L. Urinals. The following applies to urinals.

1. Automatic Flushing Tank. Tanks flushing more than one urinal shall be automatic in operation and of sufficient capacity to provide the necessary volume to flush and properly cleanse all urinals simultaneously.

2. Urinals Equipped with Automatic Flush Valves. Flushometers shall be as prescribed in §415.N.5 and no valve shall be used to flush more than one urinal.

3. Nonwater Urinals. Nonwater urinals shall conform with §409.A.2.

4. Privacy. Privacy walls or partitions shall be provided for each urinal within public use and employee use toilet rooms used by males. Such walls or partitions shall conform to the following:

a. The wall or partition finish surface shall be non-absorbent, smooth, and easily cleanable.

b. The walls or partitions shall begin at a height of not more than 14 inches above the finished floor surface and shall extend not less than 60 inches above the finished floor surface.

c. The walls or partitions shall extend from the wall surface at each side of the urinal a minimum of 18 inches or to a point not less than 6 inches beyond the outermost front lip of the urinal measured from the finished back wall surface, whichever is greater.

i. Exceptions. The following conditions shall constitute an exception (or a partial exception) to the requirement for privacy walls or partitions for each urinal within public use toilet rooms used by males:

(a). toilet rooms having wall-hung trough urinals only (which are currently only allowed in stadiums, arenas, and in jails, prisons, and other places of detention or incarceration);

(b). toilet rooms used by children less than 5 years of age which are located in day care and child-care facilities and which contain two or more urinals shall be permitted to have one urinal without privacy walls or partitions; or,

(c). toilet rooms located in jails, prisons and other places of detention or incarceration.

M. Washing Machines for Residences. The following applies to washing machines for residences.

1. Protection. Domestic washing machines shall meet the requirements of §609.A.

2. Separate Trap. Each unit shall be separately trapped or discharge indirectly into a properly trapped and vented fixture (see §1001.I).

3. Cross Fittings. Automatic washing machines shall not be connected to a 2-inch or smaller cross-type fitting.

N. Water Closets. The following applies to water closets.

1. Public Use. Water closet bowls for public use including, but not limited to, hotel and motel guest rooms and patient rooms of hospitals and nursing homes shall be of the elongated type.

2. Flushing Device. Water closet gravity, tanks, flushometer tanks and flushometer valves shall have a flushing capacity sufficient to properly flush the water closet bowls to which they are connected.

3. Float Valves. Float valves in water closet tanks shall close tight and provide water to properly refill the trap seal in the bowl.

4. Close-Coupled Tanks. The flush valve seat in close-coupled water closet combinations shall be 1 inch (25.4 mm) or more above the rim of the bowl, so that the flush valve will close even if the closet trapway is clogged. Any closets with flush valve seats below the rim of the bowl shall be so constructed that in case of trap stoppage, water will not flow continuously over the rim of the bowl.

5. Automatic Flush Valve. Flushometers shall be so installed that they will be readily accessible for repairing. When the valve is operated, it shall complete the cycle of operation automatically, opening fully and closing positively under the service pressure. At each operation, the valve shall deliver water in sufficient volume and at a rate that will thoroughly flush the fixture and refill the fixture trap. Means shall be provided for regulating flush valve flow. Not more than one fixture shall be served by a single flush valve.

6. Seats. Water closets shall be equipped with seats of smooth nonabsorbent material. All seats of water closets provided for public use including, but not limited to, hotel and motel guest rooms and patient rooms of hospitals and nursing homes shall be of the open-front type. Integral water closet seats shall be of the same material as the fixture. The seat contour shall be the same contour as the water closet.

7. Water Closet Compartment. Each water closet utilized by the public or employees shall occupy a separate compartment with walls or partitions and a lockable door enclosing the individual fixture to ensure privacy. Such walls or partitions shall conform to the following:

a. The wall or partition finish surface shall be non-absorbent, smooth, and easily cleanable.

b. The walls or partitions shall begin at a height of not more than 14 inches above the finished floor surface (except when same would be higher than the bowl rim of a child-sized toilet) and shall extend not less than 66 inches above the finished floor surface. For child-sized toilets, the walls or partitions shall begin at a height no higher than the bowl rim of the child-sized toilet.

i. Exceptions. The following conditions shall constitute an exception (or a partial exception) to the requirement for separate compartments for each water closet:

(a). toilet rooms containing only a single water closet (or only a single water closet and lavatory) with a lockable door;

(b). toilet rooms located in day care and child-care facilities which care for children less than 5 years of age and containing two or more water closets shall be permitted to have one water closet without an enclosing compartment; or,

(c). toilet rooms located in jails, prisons and other institutions of detention or incarceration.

O. Whirlpool Bathtubs. The following applies to whirlpool bathtubs.

1. Access. An access panel of sufficient size shall be installed to provide access to the pump for repair and replacement.

2. Pump. When not factory assembled to the tub assembly, the circulation pump shall be accessibly located above the crown weir of the trap. The pump drain line shall be properly graded to assure minimum water retention in the volute after fixture use.

3. Operation. Leak testing and pump operation shall be performed in accordance with manufacturer's recommendations.

4. Hydro-massage Bathtubs. Hydro-massage bathtubs shall comply with ASME A 112.19.7.

5. Whirlpool Bathtub Appliances. Whirlpool bathtub appliances shall comply with ASME A 112.19.7.

6. Suction Fittings. Suction fittings for use in whirlpool bathtubs shall comply with ASME A 112.19.8 or APSP 16.

AUTHORITY NOTE: Promulgated in accordance with R.S. 40:4(A)(7), R.S. 40:5(2)(3)(7)(9)(16)(17)(20), and HCR 4 of the 2008 Regular Session.

HISTORICAL NOTE: Promulgated by the Department of Health and Hospitals, Office of Public Health, LR 38:

§417. Additional Provisions for Plumbing Fixtures

A. Additional provisions for plumbing fixtures are contained in Chapter 13, Medical Facilities Plumbing Systems.

AUTHORITY NOTE: Promulgated in accordance with R.S. 40:4(A)(7) and R.S. 40:5(2)(3)(7)(9)(16)(17)(20).

HISTORICAL NOTE: Promulgated by the Department of Health and Hospitals, Office of Public Health, LR 38:

Chapter 5. Water Heaters

§501. General

A. Scope. The provisions of this Chapter shall govern the materials, design, and installation of water heaters.

B. Working Pressure Identification. All storage tanks and water heaters shall be clearly and indelibly marked showing the allowable safe working pressure.

C. Water Heater as Space Heater. A water heater may be used as a part of a space heating system if the outlet water temperature of the water heater does not exceed 160°F (71°C) and the potability of the water is maintained throughout the system.

D. Sediment Drains. A suitable water valve or cock, through which sediment may be drawn off or the heater or tank emptied, shall be installed at the bottom of the heater or tank.

E. Location. The following applies to the location of water heaters and/or associated storage tanks.

1. Water heaters and storage tanks shall be so located and connected that they will be accessible for observation, maintenance, servicing and replacement.

2. Gas water heaters in residential garages shall be installed so that all burners and burner ignition devices are located not less than 18 inches above the floor.

3. Gas water heaters shall be located, or reasonably protected, so that they are not subject to physical damage by a moving vehicle.

4. Every attic or furred space in which water heaters and/or storage tanks are installed shall be readily accessible by an opening and passageway as large as the largest piece of equipment and in no case less than 22 x 36 inches (559 x 914 mm) continuous from the opening to the equipment and its controls. The opening to the passageway should be located not more than 20 ft (6096 mm) from the equipment measured along the center line of such passageway. Every passageway shall be unobstructed and shall have solid continuous flooring not less than 24 inches (610 mm) wide from the entrance opening to the equipment. On the control side and on other sides where access is necessary for servicing of equipment, a level working platform extending a minimum 30 inches (762 mm) from the edge of the equipment with a 36 inch (914 mm) high clear working space shall be provided.

F. Marking. All water heaters and associated storage tanks shall comply with the following marking requirements.

1. Water Heaters. All water heaters shall bear the following, or equal wording on a visible decal or label by the manufacturer:

> There shall be installed at time of heater installation a combination temperature and pressure relief valve, selected and located in conformance with the requirements of ANSI Z21.22 or CSA 4.4M.

2. Pressure Marking of Storage Tanks. Any storage tank installed for domestic hot water shall have clearly and indelibly stamped in the metal, or so marked upon a plate welded thereto or otherwise permanently attached, the maximum allowable working pressure. Such markings shall be in an accessible position outside of the tank so as to make inspection or reinspection readily possible. All unlisted storage tanks for domestic hot water shall meet the applicable ASME standards.

AUTHORITY NOTE: Promulgated in accordance with R.S. 40:4(A)(7) and R.S. 40:5(2)(3)(7)(9)(16)(17)(20).

HISTORICAL NOTE: Promulgated by the Department of Health and Hospitals, Office of Public Health, LR 38:

§503. Standards

A. Electric Water Heaters. Electric residential water heaters shall comply with UL 174.

B. Gas Water Heaters. Automatic storage type gas water heaters with inputs of 75,000 Btuh (22 kW), or less shall comply with ANSI Z21.10.1 or CSA 4.1. Circulating tank, instantaneous and large automatic storage type gas water heaters shall comply with ANSI Z21.10.3 or CSA 4.3.

C. Testing and Listing. Water heaters shall be tested and listed by an approved agency.

AUTHORITY NOTE: Promulgated in accordance with R.S. 40:4(A)(7) and R.S. 40:5(2)(3)(7)(9)(16)(17)(20).

HISTORICAL NOTE: Promulgated by the Department of Health and Hospitals, Office of Public Health, LR 38:

§505. Minimum Capacities For Residential Water Heaters

A. Water heaters installed in residential occupancies may be sized in accordance with Table 505.

Table 505
Minimum Capacities For Water Heaters[1,2,3]

Number of Bathrooms	1 to 1.5	2 to 2.5	3 to 3.5
Number of Bedrooms	1 2 3	2 3 4 5	3 4 5 6
First Hr Rating Gal.	42 54 54	54 67 67 80	67 80 80 80

Table 505
Minimum Capacities For Water Heaters[1,2,3]

Number of Bathrooms	1 to 1.5	2 to 2.5	3 to 3.5
Number of Bedrooms	1 2 3	2 3 4 5	3 4 5 6
Nom. Tank Size, Gal. Gas Water Heaters	20 30 30	30 40 40 50	40 50 50 50
Elect. Water Heaters	30 50 50	50 66 66 80	66 80 80 80
Oil Water Heaters	30 30 30	30 30 30 30	30 30 30 30
1 gal = 3.7854 L			

NOTES:
1. The main criteria for a properly sized water heater is a sufficient first hour rating to meet peak hot water demand. The majority of tank sizes shown in the table will have a first hour rating equal to or greater than the first hour rating indicated. A water heater with a smaller tank size than shown in the table but with a sufficient first hour rating shall be permitted.
2. The first hour rating is found on the "Energy Guide" label.
3. Non-storage and solar water heaters shall be sized with sufficient capacity to meet the appropriate first hour rating shown in the table.

AUTHORITY NOTE: Promulgated in accordance with R.S. 40:4(A)(7) and R.S. 40:5(2)(3)(7)(9)(16)(17)(20).

HISTORICAL NOTE: Promulgated by the Department of Health and Hospitals, Office of Public Health, LR 38:

§507. Prohibited Installations

A. Water heaters (using solid, liquid or gas fuel) with the exception of those having direct vent systems, shall not be installed in bathrooms and bedrooms or in a closet with access only through a bedroom or bathroom. However, water heaters of the automatic storage type may be installed as replacement in a bathroom, when specifically authorized by the plumbing official, provided they are properly vented and supplied with adequate combustion air.

1. Exception. When a closet, having a weather-stripped solid door with an approved door closing device, has been designed exclusively for the water heater and where all air for combustion and ventilation is supplied from outdoors.

B. Water heaters (using solid, liquid or gas fuel) shall not be installed in a room containing air handling machinery when such room is used as a plenum.

AUTHORITY NOTE: Promulgated in accordance with R.S. 40:4(A)(7) and R.S. 40:5(2)(3)(7)(9)(16)(17)(20).

HISTORICAL NOTE: Promulgated by the Department of Health and Hospitals, Office of Public Health, LR 38:

§509. Connections

A. A shutoff valve shall be provided in the cold water branch line to each water storage tank or each water heater, on the same floor within 3 feet of the heater. Full port ball valve shut-offs on cold water branch lines to 2 inches or full port ball or resilient wedge-type shut-off valves for 2 1/2-inch lines and larger shall be used. The valving shall not interfere or cause a disruption of the cold water supply to the remainder of the cold water system.

B. The method of connecting a circulating water heater to the tank shall assure proper circulation of water through the heater, and permit a safe and useful temperature of water to be drawn from the tank. The pipe or tubes required for the installation of appliances which will draw from the water heater or storage tank shall be subject to the applicable provisions of this Part for material and installation.

AUTHORITY NOTE: Promulgated in accordance with R.S. 40:4(A)(7) and R.S. 40:5(2)(3)(7)(9)(16)(17)(20).

HISTORICAL NOTE: Promulgated by the Department of Health and Hospitals, Office of Public Health, LR 38:

§511. Safety Devices

A. Anti-Siphon and Vacuum Relief Devices. Anti-siphon and vacuum relief devices shall be provided and installed in accord with the following.

1. Means acceptable to the plumbing official shall be provided to prevent siphoning of any water heater or tank to which any water heater or tank is connected. A cold water "dip" tube with a hole at the top or a vacuum relief valve installed in the cold water supply line above the top of the heater or tank may be accepted for this purpose.

2. Bottom fed heaters or bottom fed tanks connected to water heaters shall have a vacuum relief valve installed. The vacuum relief valve shall be in compliance with the appropriate requirements of ANSI Z21.22 or CSA 4.4M.

B. Water Temperature Control in Piping from Tankless Heaters. The temperature of water from tankless heaters shall be tempered to 140°F (60°C) when intended for domestic uses. This provision shall not supersede the requirement for protective valves per §623.

C. Relief Valve. All storage water heaters operating above atmospheric pressure shall be provided with an approved, self-closing (levered) pressure relief valve and temperature relief valve or combination thereof, except for nonstorage instantaneous heaters. Such valves shall be installed in the shell of the water heater tank or may be installed in the hot water outlet, provided the thermo-bulb extends into the shell of the tank. Temperature relief valves shall be so located in the tank as to be actuated by the water in the top one-eighth of the tank served. For installations with separate storage tanks, said valves shall be installed on the tank and there shall not be any type of valve installed between the water heater and the storage tank. There shall not be a check valve or shutoff valve between a relief valve and the heater or tank which it serves. The relief valve shall not be used as a means of controlling thermal expansion (see §623.D).

D. Energy Cutoff Device. All automatically controlled water heaters shall be equipped with an energy cutoff device which will cut off the supply of heat energy to the water tank before the temperature of the water in the tank exceeds 210°F (99°C). This cutoff device is in addition to the temperature and pressure relief valves.

E. Relief Valve Approval. Temperature and pressure relief valves, or combinations thereof, or energy shutoff devices shall bear the label of the AGA or ASME, with a thermosetting of not more than 210°F (99°C) and pressure setting not to exceed the tank or heater manufacturer's rated working pressure. The relieving capacity of these two devices shall each equal or exceed the heat input to the water heater or storage tank.

F. Relief Outlet Waste. The outlet of a pressure, temperature, or other relief valve shall not be directly connected to the drainage system.

G. Heater Over 200,000 Btuh Input. The relief valve shall have a minimum AGA temperature steam rating of 200,000 Btu (211,000 kJ), shall comply with all construction, testing and installation requirements of ANSI Z21.22 or CSA 4.4M, and shall have minimum 1-inch inlet and outlet pipe size connections. In addition, the temperature relieving element of the valve shall have a water discharge capacity based on 1250 Btu (1319 kJ) for each gallon per hour of water discharged at 30 psi (207 kPa) working pressure and a maximum temperature of 210°F (99°C). This rating must be certified by the valve manufacturer. Also, the pressure relieving element of the valve shall be ASME pressure steam rated. Both the temperature water rating and the ASME pressure steam rating of the combination temperature and pressure relief valve shall be equal to or in excess of the input to the hot water storage tank or storage water heater.

H. Safety Pans and Relief Valve Waste. Safety pans and relief valve waste piping shall comply with the following.

1. When water heaters or hot water storage tanks are installed in remote locations such as suspended ceiling spaces or in attics, the tank or heater shall rest in a galvanized steel or other metal pan of equal corrosive resistance having a thickness at least equal to 0.0276-inch (0.7 mm) galvanized sheet steel.

a. Exception. Electric water heaters may rest in a high impact plastic pan of at least 1/16-inch (1.6 mm) thickness.

2. Safety pans shall be no less than 1 1/2 inches (38mm) deep and shall be of sufficient size and shape to receive all drippings or condensate from the tank or heater. The pan shall be drained by a pipe no less than 1-inch (25.4 mm) diameter.

3. The pan drain shall extend full-size and terminate over a suitably located indirect waste receptor or floor drain or extend to the exterior of the building and terminate no less than 6 inches (152 mm) or more than 24 inches (610 mm) above finish grade$_{(G)}$.

4. The discharge from the relief valve shall be piped full-size separately to the outside of the building or to an indirect waste receptor so that any discharge can cause no personal injury or property damage and can be readily observed by the building occupants. Relief valve discharge piping shall contain no valves or traps and shall be so graded and connected as to drip to the discharge end of the piping by gravity. When the relief valve discharge is piped to the outside of the building, it shall terminate no less than 6 inches (152 mm) and no more than 24 inches (610 mm) above finish grade$_{(G)}$.

5. Relief valve discharge piping shall be of those materials listed in §619 or Table 511, or shall be tested and rated for such use.

Table 511
Relief Valve Materials

Material(s)	Standard
Water Heater Relief Valve Drain Tubes	ASME A 112.4.1

AUTHORITY NOTE: Promulgated in accordance with R.S. 40:4(A)(7) and R.S. 40:5(2)(3)(7)(9)(16)(17)(20).

HISTORICAL NOTE: Promulgated by the Department of Health and Hospitals, Office of Public Health, LR 38:

§513. Solar Water Heating Systems

A. Solar energy systems used for heating potable water or using an independent medium for heating potable water shall comply with the applicable requirements of this Part. The use of solar energy shall not compromise the requirements for cross connection or protection of the potable water distribution system, water service pipe, or water supply system required by this Part. Solar energy

systems shall also meet the applicable requirements of the state-adopted energy code and the applicable codes adopted under the authority of Act 12 of the 2005 First Extraordinary Session.

B. Definitions. Definitions contained in Chapter 2 shall also apply to this Section except where the following special definitions shall apply.

Active Solar System—a solar water heating system that utilizes an electric pump and controllers to circulate heat transfer fluid through the solar collectors.

Auxiliary Heating Equipment—equipment utilizing energy other than solar, to supplement the output provided by the solar energy system.

Closed Loop System—system where the collector loop heat transfer fluid is enclosed in a piping loop separate from the potable water supply.

Collector Loop—the piping of a collector system in which a *heat transfer fluid* circulates between the *solar collector(s)* and a heat exchanger.

Direct-Circulation System—a system where the *potable water* is heated as a result of being circulated directly through the collectors (these systems are prohibited).

Double Wall Heat Exchanger—a heat exchanger design in which a single failure of any fluid barrier will not cause a cross connection or permit back siphonage of *heat transfer fluid* into the *potable water supply*. Any barrier which fails shall allow the discharge of *heat transfer fluid* and/or *potable water* to the atmosphere at a location visible to the operator or owner.

Drainback System—liquid system that only fills the collector when the temperature differential is appropriate. The water that is circulated through the collectors is stored in a reservoir.

Engineered Solar System—a system designed for a specific building project with drawings and specifications indicating materials to be installed, all as prepared by a person registered or licensed to perform solar design work.

Heat Transfer Fluid—the operating or thermal storage liquid in a mechanical system, including water or other liquid base, and additives at the concentration present under operating conditions used to move heat from one location to another. Refrigerants are not included as *heat transfer fluids*.

Human Consumption—the use of water by humans for drinking, cooking, bathing, showering, hand washing, dishwashing, or maintaining oral hygiene.

IAF—International Accreditation Forum, the world association of Conformity Assessment Accreditation Bodies and other bodies interested in conformity assessment in the fields of management systems, products, services, personnel and other similar programs of conformity assessment. Its primary function is to develop a single worldwide program of conformity assessment which reduces risk for business and its customers by assuring them that accredited certificates may be relied upon. Accreditation assures users of the competence and impartiality of the body accredited.

IAF MLA Signatory—The objective of the *IAF MLA* is to ensure that the personnel certifications granted by signatories of the *IAF MLA* can be recognized by other signatories, increasing the worldwide employability of the certified professionals. Mutual recognition is based on peer evaluations between signatories to ensure each other's personnel certifications are equivalent and that each certified professional can perform the required tasks. Once an accreditation body is a signatory of the *IAF MLA* it is required to recognize the certificates issued by conformity assessment bodies accredited by all other signatories of the *IAF MLA*, with the appropriate scope. Accreditations granted by *IAF MLA* signatories are recognized worldwide based on their equivalent accreditation programs, therefore reducing costs and adding value to business and consumers. Accreditation body members of *IAF* are admitted to the *MLA* only after stringent evaluation of their operations by a peer evaluation team. For a complete list of *IAF* members and signatories visit: http://www.iaf.nu/articles/IAF_MEM_USA__all/112 .

IECI—International Electrotechnical Commission.

Indirect-Circulation System—a *closed loop* solar water heating system which prohibits contact between the *heat transfer fluid* and the potable water by the use of a heat exchanger to transfer the collected heat from the heat transfer fluid to the potable water.

ISO—International Organization for Standardization.

ISO/IEC Guide 65—a document that specifies requirements for bodies that operate third-party certifications of products to ensure that those bodies conduct their certification processes in an impartial, reliable, and consistent manner. Conformity to these standards provides assurance that a certification program is of high quality, integrity, and competency, and that it is free of any conflicts of interest, such as financial, commercial, or social influences.

Listed—equipment or materials included in a list published by an approved nationally recognized testing laboratory, inspection agency or other organization concerned with product evaluation that maintains periodic inspection of production of listed equipment or materials, and whose listing states either that the equipment or material meets nationally recognized standards or has been tested and found suitable for use in a specified manner. The means for identifying listed equipment may vary for each testing laboratory, inspection agency, or other organization concerned with product evaluation, some of which do not recognize equipment as listed unless it is also labeled. The plumbing official should utilize the system employed by the listing organization to identify a listed product.

MLA—Multilateral Recognition Arrangement, to ensure mutual recognition of accredited certification between signatories to the *MLA*, and subsequently acceptance of accredited certification in many markets based on one accreditation.

Potable Water—water having bacteriological, physical, radiological and chemical qualities that make it safe and suitable for *human consumption*.

Potable Water Supply—a publicly owned or privately owned water supply system which purveys *potable water*.

Readily Accessible—having direct access without the need of removing any panel, door or similar covering of the item described and without requiring the use of portable ladders, chairs, etc.

Solar Collector—a device designed to absorb radiation from the sun and transfer this energy to a fluid which passes through the collector.

Solar Water Heating System—any unit or package of components designed to collect, convey, store, and convert the sun's energy for the purpose of heating *potable water*

SRCC—Solar Rating and Certification Corporation

Toxic—a substance that causes injury, illness, or death, especially by chemical means.

C. General. The following general requirements shall be applicable to solar water heating systems.

1. Certification. Solar water heating systems shall be certified to the Solar Rating and Certification Corporation's (SRCC) OG-300 document, 2010 edition (Operating Guidelines and Minimum Standards for Certifying Solar Water Heating Systems) by the SRCC themselves or by listing agencies [such as the International Association of Plumbing and Mechanical Officials (IAPMO)] which are currently accredited as meeting the ISO/IEC Guide 65 by the American National Standards Institute (ANSI) or other IAF MLA signatory accreditation bodies.

2. Installation. Solar water heating systems and appurtenances shall comply with the requirements of this Section, other applicable provisions of this code, and any other applicable requirements of the codes adopted under the authority of Act 12 of the 2005 First Extraordinary Session. All parts of a solar water heating system involving plumbing shall be installed by individuals holding a valid plumber's license issued by the State Plumbing Board of Louisiana (SPBLA), subject to any exceptions thereto as may be authorized under the SPBLA's law and regulations.

a. Solar water heating systems shall be installed in a manner conforming to this Section, other applicable provisions of this code, applicable standards, and the manufacturers' installation instructions. In instances where this Section, other applicable provisions of this code, applicable standards, or the manufacturers' instructions conflict, the more stringent provisions shall prevail.

3. Maintenance. Solar water heating systems shall be maintained in proper safe and sanitary operating condition, and the owner shall be responsible for maintenance.

a. Access for maintenance and repair shall be provided to solar water heating system equipment, components, valves, etc. Solar water heating equipment and appurtenances shall not obstruct or interfere with the operation of any doors, windows, or other building components requiring operation or access.

4. Safety. Any solar water heating system capable of providing hot water in excess of 140^0 F (60^0C) shall be equipped with a listed tempering valve or temperature-limiting device to limit the temperature of water delivered to the domestic hot water system to a maximum of 140^0 F (60^0C).

a. Solar water heating equipment that could generate a glow, spark, or flame capable of igniting flammable vapors may be installed in a residential garage provided the pilots and burners, heating elements, motors, controllers, or switches are at least 18 inches (457 mm) above the floor level.

D. Solar Water Heating System Design Criteria. Solar water heating system design criteria shall be as follows.

1. Overall System Design. All solar water heating systems shall be of the closed loop type, utilizing an indirect circulation system. Direct circulation systems are prohibited.

a. Solar water heating systems shall have flow directions indicated on system components and piping or shall have flow directions indicated on a diagrammatic representation of the system as installed, permanently affixed to the system hardware in a readily accessible and visible location.

b. The solar water heating system shall be valved to provide for shut-off from the service water supply without interrupting normal cold water service to the residence (see §509.A and apply).

2. Freeze Protection. Solar water heating system components shall be protected from damage resulting by freezing of heat transfer liquids at the lowest ambient temperatures that will be encountered during the operation of the system.

a. Solar water heating systems, where the design requires piping to be drained to protect the system from freezing, or where the heat transfer fluid must be replaced as part of regular maintenance, shall have all piping pitched toward a designated point in the system to accomplish the intended purpose.

3. Temperature and Pressure. Solar water heating system components (i.e., solar collector, storage tank, heat exchanger, piping) containing pressurized fluids shall be protected against pressures and temperatures exceeding design limitations with a properly installed temperature and pressure (T and P) relief valve. Each section of the system in which excessive temperatures and pressures are capable of developing shall have a T and P relief valve located so that a section cannot be valved off or otherwise isolated from protection by a properly installed a T and P relief valve.

a. Relief valves and its discharge piping and appurtenances shall meet the requirements listed in §§511.E through 511.H.5.

b. Vacuum relief valves shall be installed at the high point of the solar system for drain back systems unless specifically not required by the system design.

4. Thermal Contraction and Expansion. The solar water heating system design, components and subassemblies shall include adequate provisions for the thermal contraction and expansion of heat transfer fluids and system components that will occur over the design temperature range.

a. Provisions for thermal contraction and expansion within the potable water system shall be installed in accordance with the requirements of §623.D, as it relates to the water being heated for consumer use.

5. Solar Collectors. Collectors that are manufactured as a complete component shall be listed by a recognized third party listing agency. Collectors shall be listed and labeled to show the manufacturer's name, model number, serial number, collector weight, collector maximum allowable temperatures and pressures, and the type of heat transfer fluids that are compatible with the collector. The label shall clarify that these specifications apply only to the collector.

a. Valves shall be installed to allow the solar collectors to be isolated from the remainder of the solar water heating system. Each isolation valve shall be labeled with the open and closed position.

b. Collectors shall be anchored to roof structures or other surfaces in a manner to resist wind, snow, or seismic

loadings in compliance with the applicable(s) codes adopted under the authority of Act 12 of the 2005 First Extraordinary Session. Anchors secured to and through a roofing material shall be made in a manner to maintain the water integrity of the roof covering. Roof drainage shall not be impaired by the installation of collectors. Collector panels that are not an integral part of the roofing system shall be installed in a manner so as to preserve the integrity of the roof surface.

6. Heat Exchangers. Heat exchangers used for potable water heating shall protect the potable water system from being contaminated by the heat transfer fluid.

a. Heat exchangers that are of double-walled construction shall be utilized that separate the potable water from the heat transfer fluid by providing a space between the two walls that is vented to the atmosphere. The heat exchanger design shall be such that any failure of a barrier material shall allow the discharge of exchanger fluid and/or potable water to the atmosphere. The discharge location shall be visible to the operator or owner of the system and be located so that no hazards are created by such discharge.

b. Single-walled heat exchangers are prohibited.

7. Heat Transfer Fluid. Heat transfer fluid shall be compatible with all materials in the system. The flash point of the actual heat transfer fluid utilized in a solar water heating system shall be not less than 50°F (10°C) above the design maximum stagnation (no-flow) temperature of the fluid attained in the collector.

a. Only non-toxic fluids shall be utilized as the heat transfer fluid, including additives, such as anti-freeze agents, conditioners, or corrosion inhibitors.

8. Storage or Heat Exchanger Tank Construction. All tanks shall be tested and listed by an approved agency. Pressurized thermal storage units shall be listed and labeled to show the manufacturer's name, model number, serial number, storage unit maximum and minimum allowable operating temperatures and pressures, and the type of heat transfer fluids that are compatible with the storage unit. The label shall clarify that these specifications apply only to the thermal storage unit.

a. Tank covers shall be structurally designed to withstand all anticipated loads and pressures.

b. All devices attached to or within the tank shall be accessible for repair and replacement.

9. Auxiliary Heating System. Auxiliary water heating equipment shall be provided such that the combined system (i.e., solar water heating system and the auxiliary water heating equipment) will provide the same degree of reliability and performance as a conventional water heating system.

a. Auxiliary (non-solar) water heating equipment shall be compatible with the solar system heat output, temperatures, flow rates and fluid types. Auxiliary water heating equipment shall be listed and labeled by a recognized third party listing agency.

b. The piping system shall be provided with valves which can be closed for the purpose of isolating the solar hot water heating system from the auxiliary water heater, thereby permitting operation of the auxiliary water heating system when the solar water heating system is inoperative or being serviced.

c. Auxiliary water heaters shall meet all applicable requirements set forth in this Chapter.

E. Potable Water Supply. The potable water supply shall be protected from an actual or potential cross connection to any nonpotable water piping by having any nonpotable water piping (e.g., heat transfer fluid piping) color coded/identified in accordance with §607.

F. Materials. Subject to any additionally limitations below, all plumbing used in the solar water heating system including, but not limited to the collector loop, shall consist of the water distribution pipe, tubing and fittings materials specified in §619. Such materials shall comply with the standards listed in Table 603.

1. All hard-drawn copper tubing, in addition to the required incised marking, shall be marked in accordance with Sections 19.3.1 and 19.3.2 of ASTM B88-99 *Standard Specification for Seamless Copper Water Tube*. The colors shall be: Type K, green; Type L, blue. (Please note that Type M is not approved for plumbing uses in Louisiana).

2. Cast-iron fittings up to and including 2 inches in size, when used in connection with piping, shall be galvanized.

3. All malleable iron fittings shall be galvanized.

4. Flexible corrugated water heater connectors of copper or stainless steel shall be limited to 24 inches in length.

5. PEX tubing shall not be installed within the first 18 inches of piping connected to a water heater.

6. In no case shall plastic pipe including, but not limited to chlorinated polyvinyl chloride (CPVC) pipe and fittings, be used in a collector loop.

7. The piping of the collector loop shall be insulated to a minimum R-value of 2.6.

G. Testing. Testing of solar water heating systems and its components shall be performed in accordance with the following.

1. Closed Loop System. Closed loop or other type pressure systems shall be tested at one and one-half times maximum designed operating pressure. All systems shall withstand the test without leaking for a period of not less than 15 minutes.

2. Storage Tanks. Storage tanks associated with solar water heating systems shall be tested in accordance with the following.

a. Pressure type storage tanks shall be tested as prescribed in Paragraph 1 of this Subsection.

b. Non-pressure type storage tanks shall be tested by filling it with water for a period of 24 hours prior to inspection and shall withstand the test without leaking. No tank or portion thereof shall be covered or concealed prior to approval.

H. Abandonment. Every abandoned solar water heating system or part thereof shall be physically disconnected from any remaining part of the plumbing system, drained, and plugged or capped in an approved manner.

AUTHORITY NOTE: Promulgated in accordance with R.S. 40:4(A)(7) and R.S. 40:5(2)(3)(7)(9)(16)(17)(20).

HISTORICAL NOTE: Promulgated by the Department of Health and Hospitals, Office of Public Health, LR 38:

Chapter 6. Water Supply and Distribution

§601. General

A. Scope. The provisions of this Chapter shall govern the materials, design, construction, and installation of water supply and distribution systems.

B. Disinfection of Potable Water System. The plumbing official may require that a potable water system or any part thereof installed or repaired be disinfected in accordance with one of the following methods before it is placed in operation.

1. The system, or part thereof, shall be filled with a solution containing 50 ppm of available chlorine and allowed to stand 6 hours before flushing and returning to service.

2. The system, or part thereof, shall be filled with a solution containing 100 ppm of available chlorine and allowed to stand 2 hours before flushing and returning to service.

3. In the case of a potable water storage tank where it is not possible to disinfect as provided in Paragraph 1 or 2 of this Subsection, the entire interior of the tank shall be swabbed with a solution containing 200 ppm of available chlorine and the solution allowed to stand 2 hours before flushing and returning to service.

4. In the case of potable water filters or similar devices, the dosage shall be determined by the plumbing official.

C. Allowance for Character of Water/Prohibition on the use of Used Piping. The material selected for water supply pipe, tubing, and fittings shall comply with the following.

1. Selection of Materials. When selecting the material and size for water supply pipe, tubing, or fittings, due consideration shall be given to the action of the water on the interior and of the soil, fill or other material on the exterior of the pipe. No material that would produce toxic conditions in a potable water distribution system shall be used for piping, tubing or fittings. Black iron pipe and fittings are prohibited in the water supply, service and distribution system.

2. Used Piping. A piping material that has been used for other than a potable water distribution system shall not be reused in the potable water distribution system.

D. Hot Water Distribution. The hot water supply to any fixture requiring hot water shall be installed on the left side of the fixture unless otherwise specified by the manufacturer.

E. Tests. The water supply and distribution system shall be tested in accordance with §319.C.

F. Water Supply Mandatory. Every building used for human occupancy or habitation in which plumbing fixtures are installed shall be provided with an ample supply of potable water.

AUTHORITY NOTE: Promulgated in accordance with R.S. 40:4(A)(7) and R.S. 40:5(2)(3)(7)(9)(16)(17)(20).

HISTORICAL NOTE: Promulgated by the Department of Health and Hospitals, Office of Public Health, LR 38:

§603. Materials

A. Water service pipe and fittings shall be of materials specified in 613. Water distribution pipe, tubing and fittings shall be of materials specified in §619. Materials shall comply with the standards listed in Table 603.

Table 603
Water Pipe and Fitting Materials

Materials	Standards
Plastic Water Pipe and Fittings	
ABS and PVC Plastic Tubular Fittings	NSF 24
Chlorinated Poly(vinyl chloride) (CPVC) Plastic Pipe Fittings, Socket-Type Schedule 40	ASTM F 438
Chlorinated Poly(vinyl chloride) (CPVC) Plastic Pipe Fittings, Schedule 80, 2" and Under	ASTM F 439, Listed
Chlorinated Poly (Vinyl Chloride) (CPVC) Plastic Pipe, Schedule 80, 2" and Under	ASTM F 441/F 441M, Listed
Chlorinated Poly (Vinyl Chloride) (CPVC) Plastic Pipe (SDR-PR)	ASTM F 442/F 442M
Chlorinated Poly (Vinyl Chloride) (CPVC) Plastic Hot and Cold Water Distribution Systems	ASTM D 2846/D 2846M, Listed
Cold-Expansion Fittings With Metal Compression-Sleeves for Cross-Linked Polyethylene (PEX) Pipe	ASTM F 2080
Cold Expansion Fittings with PEX Reinforcing Rings for Use with Cross-Linked Polyethylene (PEX) Tubing	ASTM F 1960
Cross-Linked Polyethylene/Aluminum/Cross-Linked Polyethylene (PEX-AL-PEX) Pressure Pipe and Fittings	ASTM F 1281
Cross-Linked Polyethylene (PEX) Plastic Hot- and Cold-Water Distribution System	ASTM F 877, Listed
Cross-Linked Polyethylene (PEX) Tubing	ASTM F 876
Cross-Linked Polyethylene (PEX) Tubing Systems for Pressure	CAN/CSA B 137.5, Listed
Flexible Elastomeric Pressure Joints	ASTM D 3139, See §313.H.1
Joints for IPS PVC Pipe Using Solvent Cement	ASTM D 2672
Metal Insert Fittings Utilizing a Copper Crimp Ring for SDR9 Cross-linked Polyethylene (PEX) Tubing	ASTM F 180
Plastic Insert Fittings Utilizing a Copper Crimp Ring for SDR9 Cross-linked Polyethylene (PEX) Tubing	ASTM F 2159
Polyethylene/Aluminum/Polyethylene (PE-AL-PE) Composite Pressure Pipe and Fittings	ASTM F 1282
Polyethylene Plastic Pipe & Tubing (PE) Number 2305, 2306, 3306, 3406, 3408, 3608, 4710	ASTM D 2239, ASTM D 2737, Listed, See §303.H.1
Poly (Vinyl Chloride) (PVC) Plastic Pipe Fittings, Schedule 40	ASTM D 2466
Pressure Rated ABS-Plastic Pipe Number 1210, 2112, 1316	ASTM D 1527, Listed, See §303.H.1
Pressure-rated Polypropylene (PP) Piping Systems	ASTM F 2389
Push Fit Fittings (for use on PEX tubing complying with ASTM F 876 or F877, type K and L hard drawn and annealed copper tubing complying with ASTM B 88. and CPVC tubing complying with ASTM D 2846)	ASSE 1061
PVC Injection Molded Gasketed Fittings for Pressure Applications	CAN/CSA-B137.2, Listed
PVC Plastic Pipe, Number 1120, 1220	ASTM D 1785, ASTM D 2241, Listed, See §303.H.1
PVC Plastic Pipe Fittings, Schedule 80	ASTM D 2467, Listed
PVC Plastic Pipe Fittings, 4 in. through 12 in.	AWWA C 900
Stainless Steel Clamps for Securing SDR9 Cross-linked Polyethylene (PEX) Tubing to Metal Insert and Plastic Insert Fittings	ASTM F 2098
Threaded Chlorinated Poly (Vinyl Chloride) (CPVC) Plastic Pipe Fittings, Schedule 80, 2" and Under	ASTM F 437, Listed
Ferrous Water Pipe & Fittings	
Cast Iron Castings for Valves, Flanges, and Pipe Fittings	ASTM A 126
Cupola Malleable Iron Fittings	ASTM A 197/A 197M
Ductile-Iron Compact Fittings for Water Service	AWWA C153, ANSI A 21.53

Table 603 Water Pipe and Fitting Materials	
Materials	**Standards**
Ductile-Iron Pressure Pipe	ASTM A 377
Ductile-Iron Water Pipe	AWWA C 151, ANSI A 21.51
Ductile-Iron Water Fittings	AWWA C110, ANSI A 21.10
Gray Iron Threaded Fittings, Classes 125 and 250	ASME B 16.4
Malleable Iron Threaded Fittings, Classes 150 and 300	ASME B 16.3
Pipe Nipples for Welded and Seamless Carbon Steel and Austenitic Stainless Steel	ASTM A 733
Steel Couplings, Threaded and Galvanized	ASTM A 865/A 865M
Stainless Steel – Seamless, Welded, and Heavily Cold Worked Austenitic Piping (Types 304/304L & 316/316L only)	ASTM A 312/A 312M
Stainless Steel Tubing for General Service (Types 304/304L & 316/316L only)	ASTM A 269, See §303.H.3
Stainless Steel – Welded, Un-Annealed Austenitic Tubular Products (Types 304/304L & 316/316L only)	ASTM A 778
Steel Pipe, Hot-Dipped, Zinc-Coated, Welded and Seamless	ASTM A 53/A 53M
Nonferrous Pipe & Fittings Cast Bronze Threaded Fittings, Class 125 and 250	ASME B 16.15
Cast Copper Alloy Solder-Joint Pressure Fittings	ASME B 16.18
Cast Copper Alloy Fittings for Flared Copper Tube	ASME B 16.26
Cast Copper Alloy Pipe Flanges	ASME B 16.24
Pipe Flanges & Flanged Fittings	ASME B 16.5
Pipe Nipples for Brass and Copper	ASTM B 687
Push Fit Fittings (for use on PEX tubing complying with ASTM F 876 or F877, type K and L hard drawn and annealed copper tubing complying with ASTM B 88. and CPVC tubing complying with ASTM D 2846)	ASSE 1061
Seamless Brass Tube	ASTM B 135/B 135M
Seamless Copper Pipe	ASTM B 42
Seamless Copper Tube	ASTM B 75
Seamless Copper Water Tube (Types K & L only)	ASTM B 88
Seamless Red Brass Pipe	ASTM B 43
Threadless Copper Pipe (TP)	ASTM B 302
Welded Brass Tube	ASTM B 587
Welded Copper Tube	ASTM B 447
Wrought-Copper and Copper Alloy Solder-Joint Pressure Fittings	ASME B 16.22, For Copper Water Tube
Wrought Seamless Copper and Copper-Alloy Tube	ASTM B 251
Valves-Flanged Threaded, and Welding End	ASME B 16.34

AUTHORITY NOTE: Promulgated in accordance with R.S. 40:4(A)(7) and R.S. 40:5(2)(3)(7)(9)(16)(17)(20).

HISTORICAL NOTE: Promulgated by the Department of Health and Hospitals, Office of Public Health, LR 38:

§605. Quality of Water Supply

A. Potable Water. Potable water shall be used for drinking, culinary, and domestic purposes.

B. Acceptable Sources. Where a public supply of potable water is not available, requirements satisfactory to the governing authority shall be observed.

C. Nonpotable Water. Nonpotable water shall not be supplied to any fixture customarily classified a plumbing fixture and may only be used to supply industrial equipment or other appliances which do not require a potable supply of water and provided such nonpotable water shall not be accessible for drinking, culinary or bathing purposes.

AUTHORITY NOTE: Promulgated in accordance with R.S. 40:4(A)(7) and R.S. 40:5(2)(3)(7)(9)(16)(17)(20).

HISTORICAL NOTE: Promulgated by the Department of Health and Hospitals, Office of Public Health, LR 38:

§607. Identification of Nonpotable Water

A. Color Code Identification. Piping and outlets conveying nonpotable water shall be adequately and durably identified by a distinctive yellow-colored paint so that it is readily distinguished from piping carrying potable water.

1. Exception. Reclaimed Water. Where reclaimed water is piped or used, piping and outlets conveying this particular type of nonpotable water shall be adequately and durably identified by a distinctive purple-colored paint (or, in lieu of paint, the purple color may be manufactured integral to the pipe) so that it is readily distinguished from piping carrying potable water. The color standard and color tolerances of the required purple-color should meet the American Public Works Association's Uniform Color Code, i.e., Pantone Matching System 253, which is further specified in ANSI Z535.1-2006 (R2011) and identified in the ANSI Z535-2011 color chart.)

2. In those instances when it is not feasible to paint the entire length of the nonpotable water pipe, each nonpotable pipe shall be minimally identified with the words "caution: nonpotable water, - do not drink" in black lettering on a band of yellow-colored paint as background to designate that the liquid being conveyed therein is nonpotable. Such identification shall not be concealed by pipe insulation and when insulated the insulation shall be painted the same color as is required for the pipe. Maintenance of all identification shall be the responsibility of the owner. This identification shall be done in accordance with ASME A 13.1. The minimum size of the black letters and the length of the yellow-colored paint field shall conform to the requirements in Table 607.A.2.

Table 607.A.2 Minimum Length of Color Field and Size of Letters		
Outside Diameter of Pipe or Covering (Inches)	**Minimum Length of Color Field (Inches)**	**Minimum Size of Letters (Inches)**
1/2 to 1 1/4	8	1/2
1 1/2 to 2	8	3/4
2 1/2 to 6	12	1 1/4
8 to 10	24	2 1/2
Over 10	32	3 1/2

3. Within and about buildings and structures, a visible colored identification band shall be provided every 20 feet (6096 mm) but at least once per room, and the wording shall be visible in the normal line of vision from floor level. On straight pipe runs, the visible identification band shall be at intervals sufficient for identification. Arrows shall be used to indicate the direction of normal flow.

4. It is expressly understood that fire protection piping systems, downstream of the backflow preventer, is not considered plumbing, as per the definition of plumbing in

§203. Nothing herein shall be construed to prevent, for example, fire protection piping from being painted a red color with white lettering. Likewise, other color combinations may be used for other specific applications in accord with ASME A 13.1.

B. Contents Identification. Where any type of nonpotable water is used, all valves, branch fittings and branch terminals shall be minimally identified by the words "caution: nonpotable water, - do not drink" in black lettering on a yellow background. This identification shall be done in accordance with ASME A 13.1.Besides the caution statement, the contents (i.e., the specific nonpotable liquid) may also be identified on the legend.

C. Overall Exception to §607. Pursuant to R.S. 40:4.12, industrial-type facilities listed therein shall not be required to comply with §607 provided that such facilities have a potable water distribution identification plan in conformity with the requirements of R.S. 40:4.12. The required formal cross-connection control survey of the facility referenced in R.S. 40:4.12 shall be performed by an individual holding a valid cross-connection control surveyor certificate issued under the requirements of ASSE 5120, or other individuals holding a surveyor certificate from a nationally recognized backflow certification organization approved by the state health officer.

AUTHORITY NOTE: Promulgated in accordance with R.S. 30:2399, R.S. 40:4(A)(7) and R.S. 40:5(2)(3)(7)(9)(16)(17)(20).

HISTORICAL NOTE: Promulgated by the Department of Health and Hospitals, Office of Public Health, LR 38:

§609. Protection of Potable Water Supply

A. Backflow and Back-Siphonage. The potable water supply including, but not limited to, the water supply system, the water service pipe, and the water distribution system shall be protected from backflow and back-siphonage in conformance with the following.

1. Backflow. The potable water supply including, but not limited to, the water supply system, the water service pipe, and the water distribution system shall be protected against backflow. Every water outlet shall be protected from backflow, preferably by having the outlet end from which the water flows spaced a distance above the flood-level rim of the receptacle into which the water flows sufficient to provide a "minimum required air gap (water distribution)" as defined in ASME A 112.1.2. Where it is not possible to provide a minimum air gap (water distribution), the water outlet shall be equipped with an accessible backflow preventer complying with §609.B.

2. Back-Siphonage. Potable water supply piping, water discharge outlets, backflow prevention devices or similar equipment shall not be so located as to make possible their submergence in any contaminated or polluted liquid or substance.

B. Approval of Devices. Devices for the prevention of backflow or back-siphoning shall comply with the standards listed in Table 609. Devices installed in a potable water supply for protection against backflow shall be maintained in good working condition by the person or persons having control of such devices. The plumbing official (or, for containment devices, the water supplier) may inspect such devices and, if they are found to be defective, inoperative, or the wrong application for the cross connection or potential cross connection involved, shall require the repair and/or replacement thereof. Any repair or replacement of a device shall require testing as required under §609.F.9.c.

Table 609
Backflow Prevention Devices

Materials	Standards
Air Gap Standards	ASME A112.1.2
Backflow Preventers for Beverage Dispensing Equipment	ASSE 1022
Backflow Preventers, Double Check Valve Assembly	ASSE 1015, AWWA C510
Backflow Preventers, Laboratory Faucet	ASSE 1035
Backflow Preventers with Intermediate Atmospheric Vent	ASSE 1012
Backflow Preventers, Double Check Detector Fire Protection Backflow Prevention Assemblies	ASSE 1048
Backflow Preventers, Hose Connection	ASSE 1052
Backflow Preventers, Reduced Pressure Detector Fire Protection Assemblies	ASSE 1047
Backflow Preventers, Reduced Pressure Principle Assembly	ASSE 1013, AWWA C511
Field Test Procedures for Backflow Preventer Assemblies	ASSE Series 5000
Manual for the Selection, Installation, Maintenance and Field Testing of Backflow Prevention Devices	CAN/CSA-B64.10
Vacuum Breakers, Anti-Siphon, Pressure Type Assembly (Outdoor Use)	ASSE 1020
Vacuum Breakers-Atmospheric Type	ASSE 1001
Vacuum Breakers (Spill Resistant)	ASSE 1056
Vacuum Breakers, Hose Connection	ASSE 1011
Vacuum Breaker Wall Hydrants, Freeze Resistant Automatic Draining	ASSE 1019
Water Closet Anti-Siphon Fill Valves (Ballcocks)	ASSE 1002

C. Where Required. The following are certain instances wherein backflow prevention devices are required. This list shall not be construed as all instances where a backflow prevention device is required.

1. Flushometer. Flushometer valves shall be equipped with an approved vacuum breaker. The vacuum breaker shall be installed on the discharge side of the flushing valve with the critical level at least 4 inches (102 mm) above the overflow rim of the bowl. Flushometer tanks shall be provided with an approved backflow prevention device installed above the flood-level rim of the fixture.

2. Flush Tanks. Flush tanks shall be equipped with an approved ballcock. The ballcock shall be installed with the critical level of the vacuum breaker at least 1-inch (25.4 mm) above the full opening of the overflow pipe. In cases where the ballcock has no hush tube, the bottom of the water supply inlet shall be installed at least 1-inch (25.4 mm) above the full opening of the overflow pipe. A sheathed ballcock shall be installed on all gravity flush tanks in which the flush valve seat is less than 1-inch (25.4 mm) above the flood-level rim of the bowl.

3. Lawn Sprinklers and Irrigation Piping System. Lawn sprinkler systems and irrigation piping systems shall be equipped with an approved backflow preventer to protect against contamination of the potable water system. The following devices shall be acceptable.

a. Anti-siphon vacuum breakers, reduced pressure zone backflow preventers, and pressure type vacuum breakers equipped with gate or ball valves and test cocks. See §609.F for acceptable types based upon the application.

b. Atmospheric type vacuum breakers shall be installed downstream of the last control valve at least 6 inches (152 mm) above the highest point of usage (*i.e.,* 6 inches (152 mm) above all downstream piping and the highest sprinkler head).

c. All protective devices shall be installed in an accessible location to allow for inspection and maintenance and to isolate the sprinkler system from all other piping in the system.

d. Pressure type vacuum breakers shall be installed at least 12 inches (305 mm) above the highest point of usage (i.e., 12 inches (305 mm) above all downstream piping and the highest sprinkler head).

4. Fixture Valve Outlets with Hose Attachments, Hose Bibbs and Lawn Hydrants. Fixture valve outlets with hose attachments, hose bibbs, and lawn hydrants shall comply with the following.

a. Fixture valve outlets with hose attachments, hose bibbs and lawn hydrants shall be protected against backflow by an air gap (water distribution), a vacuum breaker or other approved back-siphonage backflow preventer on the discharge side of the valve. Back-siphonage backflow preventers may be installed directly on hose outlet connection threads. Vacuum breakers shall be installed at least 6 inches (152 mm) above the highest point of usage.

i. Exception. Water heater drains, boiler drains and washing machine connections shall not be required to be fitted with backflow prevention devices.

b. In areas subject to temperatures of 32°F (0°C) or below, all hose bibb vacuum breakers shall be of such design that the hydrant may be drained without removing the backflow preventer from the hydrant. Regardless of area temperature, hose bibb vacuum breakers shall be designed and installed to prevent total removal from the hose bibb after installation in accordance with the provisions of this Part and the manufacturer's instructions.

5. Water Supply to Steam and Hot Water Heating Boilers, Heat Exchangers, Chilled Water Systems, etc. A backflow preventer device which will automatically vent to the atmosphere shall be installed in the water supply line to all steam and hot water space heating boilers, heat exchangers, chilled water systems and similar devices being supplied from the potable water system. Such devices shall prevent back-siphonage and backflow from the heating system into the potable supply lines should the supply pressure fall below the pressure in the heating system. Such devices shall meet the requirements of ASSE 1012 or 1013 and shall bear such identification as is required by the applicable standard. See §609.F for acceptable types based upon the application.

6. Connections to automatic fire sprinkler systems shall be required to meet the minimum requirements as referenced in §609.F.

7. Handheld Showers and Pull-out Spout Type Faucets. Handheld showers and pull-out spout type faucets with integral backflow protection shall comply with ASME A112.18.1, CSA B125.1, or ASME A112.18.3; or, in lieu thereof, shall require a dedicated deck or wall mounted vacuum breaker.

8. Portable Cleaning Equipment. Where the portable cleaning equipment connects to the water distribution system, the water distribution system shall be protected against backflow with an air gap (water distribution), an atmospheric type vacuum breaker, a pressure type vacuum breaker or a reduced pressure principle backflow preventer. See §609.F for acceptable types based upon the application.

9. Chemical Dispensers. Where chemical dispensers connect to the water distribution system, the water distribution system shall be protected against backflow with an air gap (water distribution), an atmospheric type vacuum breaker, a pressure type vacuum breaker or a reduced pressure principle backflow preventer. See §609.F for acceptable types based upon the application.

10. Dental Pump Equipment. Where dental pumping equipment connects to the water distribution system, the water distribution system shall be protected against backflow with an air gap (water distribution), an atmospheric type vacuum breaker, a pressure type vacuum breaker or a reduced pressure principle backflow preventer. See §609.F for acceptable types based upon the application.

D. Backflow Preventer Installation. Backflow preventers shall be installed in accord with the following.

1. Reduced pressure zone (RPZ) type backflow preventers, and other types of backflow preventers with atmospheric ports and/or test cocks (*e.g.*, atmospheric type vacuum breakers, double check valve assemblies, pressure type vacuum breaker assemblies, etc.), shall not be installed below $grade_{(G)}$ (in vaults or pits) where the potential for a relief valve, an atmospheric port, or a test cock being submerged exists.

a. RPZ type backflow preventers and other types of backflow preventers having an atmospheric discharge port (e.g., backflow preventer with intermediate atmospheric vent) shall be installed such that the lowest point of the atmospheric discharge port's opening shall be a minimum of 12 inches above $grade_{(G)}$ or platform. When RPZ type backflow preventers and other types of backflow preventers with an atmospheric discharge port (e.g., backflow preventer with intermediate atmospheric vent) are installed in flood-prone areas, the lowest point of the atmospheric discharge port's opening should be installed at least 2-feet above the highest flood level which may have occurred in 10-year period, but in no case less than 2-feet above $grade_{(G)}$.

b. For the purpose of maintenance, double check valve assembly type backflow preventers shall be installed a minimum of 12 inches above $grade_{(G)}$ or platform.

2. Pipe-applied atmospheric type vacuum breakers shall be installed not less than 6 inches (152 mm) above all downstream piping and not less than 6 inches (152 mm) above the flood-level rim of the fixture receptor or device served. Pipe-applied pressure type vacuum breakers shall be installed not less than 12 inches (305 mm) above all downstream piping and not less than 12 inches (305 mm) above the flood-level rim of the fixture receptor or device served. Approved deck-mounted vacuum breakers and vacuum breakers within equipment, machinery and fixtures, whether of the atmospheric or spill-proof pressure type, where the critical level is a fixed distance above the potential

source of contamination, shall be installed not less than 1-inch (25.4 mm) above the flood-level rim of the fixture receptor device served or source of contamination.

3. Access, Clearance, and Platform. Backflow preventer assemblies shall be installed in an accessible location to provide for the required testing, maintenance and repair. A minimum of 1-foot of clearance shall be provided between the lowest portion of the assembly and grade$_{(g)}$ or platform. Elevated installations exceeding 5-feet above grade$_{(g)}$ shall be provided with a suitably located permanent platform capable of supporting the general tester, licensed plumber, or any other person authorized in accordance with §609.F.8 and §609.F.9 to test or repair the assembly.

E. Reduced Pressure Zone Backflow Preventers. Reduced pressure zone backflow applications subject to periodic no flow conditions should include a single soft seated spring loaded check valve located immediately upstream of the backflow prevention device to prevent periodic relief valve activation caused by fluctuating supply pressures.

F. Additional Requirements to Protect the Potable Water Supply [formerly Appendix D - Cross Connection Control]. The following are additional, more specific requirements for the protection of the potable water supply including, but not limited to, the water supply system, the water service pipe, and the water distribution system. For other rules and regulations regarding potable water supply protection, see Part XII (Water Supplies) of the State Sanitary Code of Louisiana (LAC 51:XII).

1. Purpose. The purpose of this Subsection is to provide for the protection of the public from the possibility of contamination or pollution by isolating such contaminants or pollutants which could backflow or back-siphon into a potable water supply; to promote the elimination or control of existing cross-connections, actual or potential, between potable water supplies and non-potable systems/sources; and to promote the maintenance of a continuing program of cross-connection control in the State of Louisiana.

2. Definitions. Definitions contained in Chapter 2 shall also apply to this Subsection except where the following special definitions shall apply.

Air Gap (Water Distribution)—in a *water supply system* and/or a *water distribution system*, the unobstructed vertical distance through the free atmosphere between the lowest opening from any pipe or faucet supplying water to a tank, *plumbing fixture*, or other device and the *flood-level rim* of the receptacle.

Atmospheric Vacuum Breaker—a device which prevents *back-siphonage backflow* by creating an atmospheric vent when there is either a negative pressure or sub-atmospheric pressure in a *water supply system* and/or *water distribution system*.

Backflow—the flow of water or other liquids, mixtures, or substances into the distribution pipes of a potable *water supply system* and/or *water distribution system* from any source other than its intended source. See *Back-Pressure Backflow* and *Back-Siphonage Backflow*.

Back-Pressure Backflow—a condition which occurs when the downstream pressure is higher than the supply pressure causing a reversal of the normal direction of flow.

Backflow Preventer—a mechanical device which prevents *backflow* of contaminants and pollutants into a potable water supply or distribution system by means of positive check members in addition to atmospheric ports.

Backflow Prevention Assembly—a testable *backflow preventer* which comes assembled from the manufacturer as a complete unit having approved test cocks with shut off valves installed on both the inlet and outlet sides of the *backflow preventer*.

Backflow Prevention Device—a non-testable backflow preventer.

Back-Siphonage Backflow—a reversal of the normal direction of flow in the pipeline due to a negative pressure (vacuum) being created in the supply line with the *backflow* source subject to atmospheric pressure.

Barometric Loop—a fabricated piping arrangement rising at least 35 feet at its topmost point above the highest *fixture* it supplies. It is utilized in water supply and distribution systems to protect against *back-siphonage backflow*.

By-Pass—any system of piping or other arrangement whereby the water may be diverted around any part or portion of a *water supply system*, *water distribution system* or water treatment facility including, but not limited to, around an installed *backflow preventer*.

Commercial Dishwasher—a mechanical dishwasher that is used in other than domestic applications.

Containment—a method of *backflow* prevention which requires a *backflow* prevention device or method on the *water service pipe* to isolate the customer from the *water main*.

Contamination—the introduction into water of microorganisms, chemicals, toxic substances, wastes or wastewater that makes the water unfit for its intended use.

Cross Connection—any connection or arrangement by means of which contaminants of any kind can be caused to enter the potable *water supply system* or *water distribution system*.

Degree of Hazard—an evaluation of the potential risk to public health if the public were to be exposed to contaminated water caused by an unprotected or inadequately protected cross connection.

Double Check Valve Assembly—an assembly of 2 independently operating spring loaded check valves, with tightly closing shut off valves on each side of the check valves, plus properly located test cocks for the testing of each check valve.

Double Check Valve with Intermediate Atmospheric Vent—a device having two spring loaded check valves separated by an atmospheric vent chamber.

Dual Check Valve—two spring loaded, independently operating check valves without tightly closing shut-off valves and test cocks. Generally employed immediately downstream of the water meter. Not an approved backflow prevention device.

Fixture Isolation—a method of backflow prevention in which a *backflow preventer* is located to correct a *cross-connection* at a fixture located within the premise itself [rather than locating a *backflow preventer* on the *water service pipe* (as is done under *containment)*].

Hose Bibb Vacuum Breaker—a device which is permanently attached to a hose bibb and which acts as an *atmospheric vacuum breaker*.

Human Consumption—the use of water by humans for drinking, cooking, bathing, showering, hand washing, dishwashing, or maintaining oral hygiene.

Master Meter—a water meter serving multiple residential dwelling units or multiple commercial units. Individual units may or may not be sub-metered.

Potable Water—water having bacteriological, physical, radiological and chemical qualities that make it safe and suitable for human consumption.

Potable Water Supply—a publicly owned or privately owned *water supply system* which purveys *potable water*.

Pressure Vacuum Breaker—a device containing one or two independently operated spring loaded check valves and an independently operated spring loaded air inlet valve located on the discharge side of the check or checks. The device includes tightly closing shut-off valves on each side of the check valves and properly located test cocks for the testing of the check valve(s).

Public Water System—a particular type of *water supply system* intended to provide *potable water* to the public having at least fifteen *service connections* or regularly serving an average of at least twenty-five individuals daily at least sixty days out of the year.

Reduced Pressure Principle Backflow Preventer—an assembly consisting of two independently operating approved check valves with an automatically operating differential relief valve located between the two check valves, tightly closing shut-off valves on each side of the check valves plus properly located test cocks for the testing of the check valves and relief valve.

Service Connection—water service pipe.

Water Service Pipe—the pipe from the *water main* and/or water meter, *water supply system* or other approved source of water supply, to the building or structure served.

Water Supplier—a *person* who owns or operates a *water supply system* including, but not limited to, a *person* who owns or operates a *public water system*.

Water Supply System—the system of pipes or other constructed conveyances, structures and facilities through which water is obtained, treated to make it *potable* (if necessary) and then distributed (with or without charge) for human consumption or other use.

3. Air Gaps (Water Distribution). The provision of air gaps (water distribution) shall be required for backflow prevention in any and all cases where such a measure is the most practical that can be employed. The "minimum required air gap (water distribution)" shall be in accord with ASME A 112.1.2.[1]

[1]For informational purposes only, ASME A 112.1.2 generally requires a minimum required air gap equal to two times the effective opening (or 3 times the effective opening if affected by a nearby wall). Compliance shall be strictly determined by the provisions contained within the standard itself.

4. Responsibility of Water Suppliers. As required by LAC 51:XII.344, each water supplier shall protect the water produced and distributed by its water supply system from potential contamination by ensuring compliance with the containment practices and maintenance/field testing requirements prescribed by this Part or as otherwise directed by the state health officer.

5. Containment Practices. Backflow prevention methods or devices shall be utilized as directed by the water supplier or plumbing official to isolate specific water supply system customers from the water supply system's mains when such action is deemed necessary to protect the water supply system against potential contamination caused by backflow of water from that part of the water system owned and maintained by the customer (e.g., the piping downstream of the water meter, if provided).

a. As a minimum, the following types of backflow prevention assemblies or methods shall be installed and maintained by water supply system customers immediately downstream of the water meter (if provided) or on the water service pipe prior to any branch line or connections serving the listed customer types and categories.

Table 609.F.5[1] (Containment)
Air Gap
1. Fire Protection/Sprinkler System utilizing non-potable water as an alternative or primary source of water
Reduced Pressure Principle Backflow Prevention Assembly
1. Hospitals, Out-Patient Surgical Facilities, Renal Dialysis Facilities, Veterinary Clinics
2. Funeral Homes, Mortuaries
3. Car Wash Systems
4. Sewage Facilities
5. Chemical or Petroleum Processing Plants
6. Animal/Poultry Feedlots or Brooding Facilities
7. Meat Processing Plants
8. Meat Plating Plants
9. Food Processing Plants, Beverage Processing Plants
10. Fire Protection/Sprinkler Systems using antifreeze in such system (a detector type assembly is recommended on unmetered fire lines)
11. Irrigation/Lawn Sprinkler Systems with Fertilizer Injection
12. Marinas/Docks
13. Radiator Shops
14. Commercial Pesticide/Herbicide Application
15. Photo/X-ray/Film Processing Laboratories
16. Multiple Commercial Units served by a master meter
17. Any type of occupancy type or any other facility having one or more Single-walled Heat Exchangers which uses any chemical, additive, or corrosion inhibitor, etc., in the heating or cooling medium
18. Any type of occupancy type or any other facility having one or more Double-walled Heat Exchangers which use any chemical, additive, or corrosion inhibitor, etc., in the heating or cooling medium and which does not have a path to atmosphere with a readily visible discharge
19. Premises where access/entry is prohibited
Pressure Vacuum Breaker Assembly/ Spill Resistant Vacuum Breaker Assembly
1. Irrigation/Lawn Sprinkler Systems
Double Check Valve Assembly
1. Fire Protection/Sprinkler Systems (a detector type double check valve assembly is recommended on unmetered fire lines)
2. Multiple Residential Dwelling Units served by a master meter
3. Multistoried Office/Commercial Buildings (over 3 floors)
4. Jails, Prisons, and Other Places of Detention or Incarceration

NOTES:

1. Other Containment Practices - Table 609.F.5 is not inclusive of all potential contamination sources which may need containment protection. For potential contamination sources not listed in this table, backflow prevention methods or devices shall be utilized in accordance with Table B1 of CAN/CSA B64.10 – 1994. When a potential contamination source and its associated backflow prevention method or device is not identified in Table 609.F.5 or Table B1 of CAN/CSA B64.10 – 1994, backflow prevention methods or devices shall be utilized:

a. as directed by the plumbing official; or,

b. as directed by the water supplier.

2. In cases of a discrepancy regarding the particular backflow prevention assembly or method required, the assembly or method providing the higher level of protection shall be required.

6. Fixture Isolation Practices. Water supply system customers shall provide and maintain backflow prevention methods or devices as directed by the plumbing official within that part of the water system owned and maintained by the customer (e.g., the piping downstream of the water meter, if provided, or downstream from any containment device) to protect the on-site users of the water system against potential contamination due to backflow.

a. As a minimum, the following types of backflow prevention devices, assemblies or methods shall be employed as appropriate for the following points of usage.

Table 609.F.6[1, 2] (Fixture Isolation)
Air Gap
1. Cooling Towers
2. Chemical Tanks.
3. Commercial Dishwashers in commercial establishments
4. Ornamental Fountains
5. Swimming Pools, Spas, Hot Tubs (reduced pressure principle backflow preventer also acceptable)
6. Baptismal Fonts
7. Animal Watering Troughs
8. Agricultural Chemical Mixing Tanks
9. Water Hauling Tanks
Reduced Pressure Principle Backflow Preventers
1. Commercial Boilers
2. Air Conditioning, Chilled Water Systems
3. Air Conditioning, Condenser Water Systems
4. Pot-type Chemical Feeders
5. Swimming Pools, Spas, Hot Tubs (air gap also acceptable)
6. Irrigation/Lawn Sprinkler Systems with Fertilizer Injection
7. Photo/X-ray/Film Processing Equipment
8. Single-walled Heat Exchangers which use any chemical, additive, or corrosion inhibitor, etc., in the heating or cooling medium
9. Double-walled Heat Exchangers which use any chemical, additive, or corrosion inhibitor, etc., in the heating or cooling medium and which does not have a path to atmosphere with a readily visible discharge
10. Room(s) or other sub-units of a premise or facility receiving water where access is prohibited
Double Check Valve Assembly
1. Food Processing Steam Kettles
2. Individual Travel Trailer Sites
3. Single-walled Heat Exchangers which do not use any chemical, additive, or corrosion inhibitor, etc., in the heating or cooling medium
4. Double-walled Heat Exchangers which do not use any chemical, additive, or corrosion inhibitor, etc., in the heating or cooling medium and which does not have a path to atmosphere with a readily visible discharge
Atmospheric or Pressure Vacuum Breakers
1. Laboratory and/or Medical Aspirators
2. Flushing Rim Bedpan Washers
3. Garbage Can Washers
4. Laboratory or Other Sinks with threaded or serrated nozzles
5. Flushometer Operated Fixtures
6. Commercial Washing Machines
7. Irrigation/Lawn Sprinkler Systems
8. Hose Bibbs
9. Commercial Dishwashers in commercial establishments
Pressure Vacuum Breakers/Spill Resistant Vacuum Breakers
1. Mortuary/Embalming Aspirators
2. Irrigation/Lawn Sprinkler Systems with Separate Zones

NOTES:
1. See Tables 1307.E and 1307.F for fixture isolation practices in hospital plumbing systems.
2. Other Fixture Isolation Practices - Table 609.F.6 is not inclusive of all potential contamination sources which may need fixture isolation protection. For potential contamination sources not listed in this table, backflow prevention methods or devices shall be utilized in accordance with Table B1 of CAN/CSA B64.10 – 1994.
3. When a potential contamination source and its associated backflow prevention method or device is not identified in Table 609.F.6 or Table B1 of CAN/CSA B64.10 – 1994, backflow prevention methods or devices shall be utilized as directed by the plumbing official.
4. In cases of a discrepancy regarding the particular backflow prevention device or method required, the device offering the higher level of protection shall be installed. In contested cases, the co-State Plumbing Official (i.e., the state health officer) shall be consulted to issue a ruling on the particular backflow prevention device or method required, if any.

7. Bypasses. All bypasses shall have the same level of backflow protection as the main water supply line.

8. Installation/Repair. Backflow preventers shall be installed and/or repaired by a State Plumbing Board of Louisiana (SPBLA)-licensed plumber who holds a SPBLA water supply protection specialist endorsement on his/her plumbing license pursuant to LSA - R.S. 37:1361 et seq. and its implementing regulations (LAC 46:LV.101 et seq.); or, for those backflow preventers located on public property or otherwise under the complete control of the water supplier (e.g., water meter and the piping upstream of the water meter, if provided), by a Backflow Prevention Assembly Repairer who meets the ASSE 5130 Professional Qualification Standard or other individuals holding a backflow prevention assembly repairer certificate from a nationally recognized backflow certification organization approved by the state health officer. Backflow preventers associated with a landscape irrigation system may be installed, tested, and repaired by a Horticulture Commission of Louisiana-licensed landscape irrigation contractor who holds a SPBLA-issued special water supply protection specialist endorsement in accord with R.S. 3:3808.P.

9. Maintenance/Field Testing. Backflow prevention assemblies and methods shall be checked and field tested by a Backflow Prevention Assembly Tester who meets ASSE 5110 Professional Qualification Standard, or other individuals holding a testing certificate from a nationally recognized backflow certification organization approved by the state health officer. Testing procedures shall be in accord with the requirements of §319.F.

a. Types of Backflow Preventers to be Field Tested. The following types of backflow prevention assemblies and methods shall be checked and field tested in accordance with the frequency established in §609.F.9.c:

i. double check valve assemblies;

ii. reduced pressure principle backflow prevention assemblies;

iii. pressure vacuum breakers;

iv. spill resistant vacuum breakers;

v. air gaps (water distribution) on high hazard applications; and,

vi. other backflow prevention devices as specified by the plumbing official or water supplier.

NOTE: It is recommended that other types of backflow prevention devices not listed here be visually checked periodically.

b. Any backflow preventer in §609.F.9.a. which is found defective shall be repaired by an individual meeting the qualifications specified in §609.F.8.

c. Frequency of Field Testing. The backflow prevention assemblies and methods specified in §609.F.9.a. shall be field tested:

i. upon installation;

ii. when cleaned, repaired, or overhauled;

iii. when relocated;

iv. annually;

v. as required by the plumbing official; and,

vi. as required by the water supplier for assemblies or methods providing containment protection for their water supply system.

d. Owner Responsibilities. The owner of the backflow prevention assemblies shall comply with the following:

i. It shall be the duty of the owner of the backflow prevention assembly to see that these tests are made in a timely manner in accord with the frequency of field testing specified in §609.F.9.c. and that devices which are found defective are repaired or replaced in accordance with §609.F.9.b.

ii. The owner shall notify the plumbing official, and/or water supplier in advance when the tests are to be undertaken so that the plumbing official and/or water supplier may witness the tests if so desired.

iii. Upon completion, the owner of a containment assembly or method (see 609.F.5) shall provide records of such tests, repairs, overhauls, or replacements to the water supplier. Upon completion, the owner of a fixture isolation device, assembly, or method (see 609.F.6) shall provide records of such tests, repairs, overhauls, or replacements to the plumbing official. In addition, all records shall be kept by the owner of the backflow prevention device or method for at least 5 years and, upon specific request, shall be made available to the plumbing official, water supplier, and/or the state health officer.

iv. All tests, repairs, overhauls or replacements shall be at the expense of the owner of the backflow preventer.

AUTHORITY NOTE: Promulgated in accordance with R.S. 40:4(A)(7) and R.S. 40:5(2)(3)(7)(9)(16)(17)(20).

HISTORICAL NOTE: Promulgated by the Department of Health and Hospitals, Office of Public Health, LR 38:

§611. Sizing of Water Distribution System

A. Minimum Sizes. The sizing of the water distribution system shall conform to good engineering practice (e.g., see §1805, Appendix B). See §611.C for the minimum required size of fixture branches and individual manifold distribution lines. See §611.D for the minimum required size of fixture supplies and §611.E for the minimum pressure required at fixture outlets.

B. Calculation of Sizes. When required by the plumbing official, the sizing of the water distribution system shall be calculated by a registered mechanical engineer or other acceptable authority.

C. Size of Fixture Branches and Manifold Individual Distribution Lines. The minimum size of fixture branches or manifold individual distribution lines shall be in accordance with Table 611.

Table 611
Minimum Size of Fixture Branches and Individual Manifold Distribution Lines

Type of Fixture or Device	Fixture Branch Pipe Size (in.)	Individual Manifold Distribution Line Size (in.)
Bathtubs (60" x 32" and smaller)	1/2	1/2
Bathtubs (Larger than 60" x 32")	1/2	1/2
Combination Sink and Tray	1/2	1/2
Drinking Fountain	1/2	1/2
Dishwasher (Domestic)	1/2	1/2
Kitchen Sink, Residential	1/2	1/2
Kitchen Sink, Commercial	3/4	3/4
Lavatory	1/2	1/2
Laundry Tray 1, 2, or 3 Compartments	1/2	1/2 (1 Tray)
Wall Hydrants	1/2	1/2
Shower (Single Head)	1/2	1/2
Sinks (Service, Slop)	1/2	1/2
Sinks Flushing Rim	3/4	3/4
Urinal (Flush Tank)	1/2	1/2
Urinal (Direct Flush Valve)	3/4	3/4
Water Closet (Flushometer Valve Type)	1	1
Water Closet (Gravity or Flushometer Tank Type)	1/2	1/2
Hose Bibbs	1/2	1/2
1 in. = 25.4 mm		

1. For fixtures not listed in Table 611, the minimum fixture branch or manifold individual distribution line may be made the same as for a comparable fixture.

D. Size of Fixture Supply. The fixture supply piping, tubing, or flexible connector shall be sized in accordance with the fixture manufacturer's recommendations but in no case shall the size interfere with the minimum fixture outlet discharge pressure requirements specified in §611.E.

E. Minimum Pressure. Minimum fairly constant service pressure at the point of outlet discharge shall be not less than 8 psi (55.2 kPa) flowing for all fixtures except for direct flush valves, for which it shall be not less than 15 psi (103 kPa) flowing, and except where special equipment is used requiring higher pressure. In determining the minimum pressure, allowance shall be made for the pressure drop due to friction loss in the piping system during maximum demand periods as well as head, meter, and other losses in the system.

F. Auxiliary Pressure, Supplementary Tanks. If the residual pressure in the system is below the minimum allowable at the highest water outlet when the flow in the system is at peak demand, an automatically controlled pressure tank or automatically controlled pump or gravity tank of sufficient capacity shall be installed. Its capacity shall be sufficient to supply sections of the building installation which are too high to be supplied directly from the water main.

G. Low Pressure Cutoff. When a booster pump is used on an auxiliary pressure system, there shall be installed a low-pressure (<15 psi gauge) cutoff on the booster pump to prevent the creation of negative pressures on the suction side of the water system. Other arrangements may be used if found adequate and if approved by the plumbing official.

1. Exception. In the case of fire pumps whose source of water is a potable water system, in lieu of a low-pressure cutoff, a low-suction throttling valve may be installed to sense the pressure in the water supply and automatically send a signal to a valve on the discharge side of the pump. This valve will not close all the way and it will not cutoff the fire pump, but it will modulate (open and close) to throttle back the discharge in an attempt to maintain a relatively constant pressure at the sensing location on the suction side of the pump. This allows the fire pump to keep sending water to the fire while the water supply pressure on the suction side of the pump recovers. Use of this valve protects against negative pressures being created in the potable water main when an uncontrolled fire pump is used. The valve body is to be located in between the pump discharge and discharge check valve with the sensing line connected to the suction side of the pump. The valve shall be set to prevent suction pressure from dropping below 15 psi.

H. Variable Street Pressures. When the street main has a wide fluctuation in pressure, the water distribution system shall be designed for minimum pressure available.

I. Hazard and Noise. Where water pressures are excessive or where required to eliminate water hammer or when deemed necessary by local authorities, approved engineered water hammer arresters or calculated air chambers shall be provided to safeguard the water distribution system against destructive water hammer hazard and noise.

1. Approved engineered mechanical water hammer arresters shall be sized and installed in accordance with PDI-WH201 or ASSE 1010. Where line water pressure exceeds 65 psi (448 kPa) in a water distribution system, the next larger size approved water hammer arrester shall be used. When water pressure exceeds 80 psi (552 kPa), a water pressure reducing valve shall be installed in accordance with §611.J. Any approved engineered mechanical water hammer arrester shall have been tested by a recognized testing laboratory and certified to meet the requirements of the above standard.

2. Where calculated air chambers are installed, they shall be in an accessible place and each air chamber shall be provided with an accessible means for restoring the air in the event the chamber becomes waterlogged.

J. Water Pressure Reducing Valve or Regulators. The following shall apply relative to water pressure reducing valves or regulators.

1. Where water pressure within a building exceeds 80 psi (552 kPa) static, an approved water pressure regulator conforming to ASSE 1003 with strainer shall be installed to reduce the pressure in the building water distribution piping to 80 psi (552 kPa) static or less, whichever is consistent with good engineering practice. Exceptions to this requirement are service lines to sill cocks and outside hydrants, and main supply risers in tall buildings where pressure from the mains is reduced to 80 psi (552 kPa) or less at the fixture branches or at individual fixtures.

2. The delivery pressure variation shall not exceed 1 psi (6.895 kPa) for every 10 psi (69 kPa) pressure change in the inlet pressure. The reduced pressure fall-off from its no-flow setting shall not exceed 17 psi (117 kPa), and with a difference at this point of 50 psi (345 kPa) between the initial and this reduced flow pressure of 50 psi (345 kPa), the capacity shall be not less than that shown in Table 611.J.

Table 611.J
Minimum Capacity Based on Pipe Size

Nominal Pipe Size (in.)	1/2	3/4	1	1 1/4	1 1/2	2
Average velocity through pipe (ft/s)	10.5	10.0	9.5	9.0	8.5	7.5
Flow(gpm)	9.95	16.65	25.0	42.0	54.8	77.5

1 in = 25.4 mm
1 ft/s = 0.3048 m/s
1 gpm = 0.0631 L/s

3. An integral bypass check valve shall be capable of opening to permit a reverse flow of water through the reducing valve to prevent a buildup of system pressure by thermal expansion of the water with an increase of reduced pressure not exceeding 2 psi (13.8 kPa) above the prevailing initial pressure.

4. The valve shall be designed to remain open to permit uninterrupted water flow in case of valve failure.

5. All regulators and strainers must be so constructed and installed as to permit repair or removal of parts without breaking a pipeline or removing the valve and strainer from the pipeline.

6. Approved valves shall comply with ASSE 1003.

K. Manifold Water Distribution Systems. Manifold water distribution systems shall comply with the following.

1. Hot water and cold water manifolds shall be sized according to Table 611.K.

Table 611.K
Maximum Gallons Per Minute (GPM) Available[2]

Nominal Size ID (Inches)	Velocity[1]	
	4 fps	8 fps
1/2	2	5
3/4	6	11
1	10	20
1 1/4	15	31
1 1/2	22	44

1 in = 25.4 mm
1 fps = 0.3048 m/s
1 gpm = 0.0631 L/s

NOTES:
1. For velocity limitations use manufacturers' recommendations.
2. Total gpm is the demand of all outlets.
2. Individual distribution pipe size shall conform to Table 611 or to good engineering practice *(e.g.,* see §1805, Appendix B).
3. Individual fixture shutoff valves shall be installed at the outlet for each fixture. If secondary shutoff valves are used at the manifold, they shall be identified for the fixture being supplied.
4. Piping bundles for manifold systems shall be supported in accordance with Chapter 3. Direction changes and bending radiuses shall be in accordance with manufacturer's recommendations.

AUTHORITY NOTE: Promulgated in accordance with R.S. 40:4(A)(7) and R.S. 40:5(2)(3)(7)(9)(16)(17)(20).

HISTORICAL NOTE: Promulgated by the Department of Health and Hospitals, Office of Public Health, LR 38:

§613. Water Service Pipe and Fittings

Editor's Note: The text in this Section will be effective on January 1, 2013.

A. Materials Underground. Materials for underground water service pipe and lawn sprinkler systems, shall be a minimum Type L copper tube, brass, cast iron pressure pipe, ductile-iron, or pressure-rated plastic as listed in Table 603. The minimum working pressure of plastic piping installed outside of the foundation walls shall be 160 psi (1103 kPa) at 73°F (23° C), with permanent identification markings. All potable water pipes, pipe fittings, plumbing fittings, or fixtures for underground water service pipe shall be evaluated and listed as conforming to NSF/ANSI 372. Any solder or flux used in the installation or repair of any plumbing including, but not limited to, water service lines in a residential or nonresidential facility providing water for human consumption shall be lead free.

1. Exception. The lead free requirement of Subsection A shall not apply to:

a. leaded joints necessary for the repair of existing cast iron pipes;

b. pipes, pipe fittings, plumbing fittings, or fixtures, including backflow preventers, that are used exclusively for nonpotable services such as manufacturing, industrial processing, irrigation, outdoor watering, or any other uses where the water is not anticipated to be used for human consumption; or,

c. toilets, bidets, urinals, fill valves, flushometer valves, tub fillers, shower valves, service saddles, or water distribution main gate valves that are 2 inches in diameter or larger.

2. Materials subject to corrosion shall be protected when installed in corrosive soils. Approved fittings shall be used on the water service pipe and the water supply system, except that changes of direction in copper tube (ASTM B 88) may be made with bends having a radius of not less than four diameters of the tube, providing that such bends are made by use of forming equipment which does not deform or create loss in cross-sectional area of the tube. If allowed by the manufacturer, bends of pressure-rated plastic pipe listed in Table 603 shall be installed to conform with the manufacturer's recommendations but in no case shall the bend radius be less than the requirements contained within §§619.A.5 through 619.A.8, as applicable. With the exception of heat fused polypropylene, all other inaccessible water service joints and fittings for plastic pipe below concrete slabs and driveways are prohibited.

B. Water Service Piping. Water service lines shall be sized in accordance with accepted engineering practice (e.g., see §1805, Appendix B), but in no case shall the water service piping be less than 1-inch inside nominal diameter for galvanized ferrous piping or 3/4-inch inside diameter for copper, copper alloy or approved noncorrosive pipe or tube.

C. Service Lines Near Drain or Sewer Line. Except as permitted in §613.D, the underground water service pipe and the building drain or building sewer shall be not less than 5-feet (1524 mm) apart horizontally and shall be separated by undisturbed or compacted earth.

D. Permitted Installation Near Drain or Sewer Line. The water service pipe may be placed in the same trench with the building drain and building sewer provided the following conditions are met:

1. The bottom of the water service pipe, at all points, shall be at least 12 inches (305 mm) above the top of the sewer line at its highest point;

2. The water service pipe shall be placed on a solid shelf excavated at one side of the common trench; and,

3. Any underground water service pipe which must cross a pipe that conveys sewage *(e.g.,* building drains, building sewers, and other piping conveying sewage) shall have a minimum vertical separation of 12 inches (305 mm) between the outside of the water service pipe and the outside of the sewer pipe. The water service pipe should always be installed above the sewer pipe. At crossings, one full length of water pipe shall be located so both joints will be as far from the sewer pipe as possible.

E. Stop and Waste Valves and Devices. Combination stop and waste valves and cocks shall not be installed underground in a water service pipe, water supply system, or a water distribution system. Any fixture or device which incorporates a stop and waste feature is prohibited if the waste opening is underground or in any location that waste water or water-borne contaminates may enter the device or water supply from the ground or other source by reversal of flow.

F. Private Water Supply. No private supply shall be interconnected with any public water supply.

G. Potable Water (Pressure) Lines Near Soil Absorption Trenches, Sand Filter Beds, Oxidation Ponds, and any Effluent Reduction Option (Effluent Reduction Fields, Rock Plant Filters, Spray Irrigation Systems, Overland Flow Systems, Mound Systems, or Subsurface Drip Disposal Systems). Underground potable water (pressure) lines shall not be located within 25 feet (7.6 m) of any soil absorption trenches, sand filter beds, oxidation ponds, or any effluent reduction option [including, but not limited to effluent reduction fields, rock plant filters, spray irrigation systems (from the edge of the spray and its drainage), overland flow systems (from the discharge point and field of flow), mound systems, or subsurface drip disposal systems - see LAC 51:XIII.733] which have been installed for either the disposal of septic tank effluent or mechanical treatment plant effluent.

H. Potable Water (Pressure) Lines Near Septic Tanks, Mechanical Sewage Treatment Plants, and Pump Stations. Underground potable water (pressure) lines shall not be located within 10 feet (3.0 m) of any septic tank, mechanical sewage treatment plant, or sewage pump station.

I. Potable Water (Pressure) Lines Near Seepage Pit, Cesspool, or Sanitary Pit Privy. Underground potable water (pressure) lines shall not be located within 50 feet (15.2m) of any seepage pit, cesspool, or sanitary pit privy.

J. Reclaimed Water Lines. Reclaimed water lines shall be considered and treated as though they are sewerage lines and shall be installed in accord with the spacing requirements of this Section for the protection of potable water lines.

AUTHORITY NOTE: Promulgated in accordance with R.S. 30:2399, R.S. 40:4(A)(7), R.S. 40:5(2)(3)(7)(9)(16)(17)(20), and R.S. 40:1299.27.1.

HISTORICAL NOTE: Promulgated by the Department of Health and Hospitals, Office of Public Health, LR 38:

§615. Water Pumping and Storage Equipment

A. Pumps and Other Appliances. Water pumps, tanks, filters, softeners, and all other appliances and devices shall be protected against contamination.

B. Drains from Pressure Tanks, Boilers, and Relief Valves. The drains from pressure tanks, boilers, relief valves and similar equipment shall not be directly connected to the drainage system.

C. Cleaning, Painting, Repairing Water Tanks. A potable water supply tank shall not be lined, painted, or repaired with any material which will affect either the taste or the potability of the water supply when the tank is returned to service. Tanks shall be disconnected from the system during such operations, to prevent any foreign fluid or substance from entering the distribution piping.

D. Insufficient Pressure. When the water pressure from the water main (or other approved sources of potable water supply) during flow is insufficient to supply all fixtures freely and continuously, the rate of supply shall be supplemented by a gravity house tank or booster system (see §611.G).

E. Support. All water supply tanks shall be supported in accordance with the applicable codes adopted under the authority of Act 12 of the 2005 First Extraordinary Session or other regulations which apply.

F. Overflow Pipes. Overflow pipes for gravity tanks shall be protected against the entrance of insects and vermin and shall discharge above and within 6 inches (152 mm) of a roof or catch basin. Overflow pipes shall not be valved.

G. Drains. Water supply tanks shall be provided with valved drain lines located at their lowest point and discharged as an indirect waste. Drains for water supply tanks shall be not less than shown in Table 615.G.

Table 615.G
Minimum Drain Size for Water Supply Tanks

Drain Pipe (in)	Tank Capacity (gal)	Drain Pipe (in)	Tank Capacity (gal)
1	Up to 750	2 1/2	3001 to 5000
1 ½	751 to 1500	3	5001 to 7500
2	1501 to 3000	4	Over 7500
1 in = 25.4 mm 1 gal = 3.7854 L			

1. Each drain line shall be equipped with a quick opening valve of the same diameter as the pipe.

H. Gravity and Suction Tank. Tanks used for potable water supply shall be equipped with tight covers which are vermin and rodent proof. Such tanks shall be vented with a return bend vent pipe having an area not less than one-half the area of the feed riser, and the vent opening shall be properly screened.

I. Pressure Tank. Pressure tanks used for supplying potable water shall be equipped with an approved vacuum relief device located on the top of the tank. The air inlet of this device shall be properly screened.

AUTHORITY NOTE: Promulgated in accordance with R.S. 40:4(A)(7) and R.S. 40:5(2)(3)(7)(9)(16)(17)(20).

HISTORICAL NOTE: Promulgated by the Department of Health and Hospitals, Office of Public Health, LR 38:

§617. Water Supply Control

A. Valves Required. An accessible shutoff valve shall be provided on the consumer's premises ahead of the first outlet or branch connection to the service or distribution pipe of each dwelling, dwelling unit and buildings other than dwellings and dwelling units. Full port ball valve shut-offs on lines to 2 inches or full port ball or resilient wedge-type shut-off valves for 2 1/2-inch lines and larger shall be used. When such shutoff valve is located in the service pipe outside the building, it shall be located and accessible in a manufactured, approved, valve box with a readily removable access cover which extends to grade$_{(G)}$ level. When drain valves are provided for the distribution piping or other portions of the water distribution system, such drains shall be above grade$_{(G)}$ or otherwise located to prevent the possibility of backflow into the piping system after the system has been drained.

B. Tank Controls. Supply lines taken from pressure or gravity tanks shall be valved at or near the tank.

C. Controls for Fixtures Within Dwellings and Dwelling Units. Each individual fixture shall have an accessible shutoff valve at each outlet which will permit each fixture to be shut off without interfering with the water supply to any other fixtures. Shutoff valves for each fixture supplied by a manifold distribution system may be located at the manifold in addition to the outlet of the fixture being supplied. The hose bibb or hose connection shutoff valve shall be the only shutoff valve required on washing machine connectors.

1. Shutoff valves to water supply for refrigerators with automatic ice makers shall be accessible on the same floor.

D. Controls for Fixtures in Buildings Other Than Dwellings or Dwelling Units. In all buildings other than dwellings and dwelling units, shutoff valves shall be installed which permit the water supply to all fixtures and equipment in each separate room to be shut off without interference with the water supply to any other room or portion of the building or each individual fixture and piece of equipment shall have a shutoff valve which will permit each fixture and piece of equipment to be shut off without interfering with the water supply to other fixtures or equipment.

1. Each water supply branch line 1 1/2-inch or larger shall have a shutoff valve installed so as to isolate all fixtures and all pieces of equipment supplied by the branch line. The shutoff valve shall be installed in a labeled and accessible location as close to the connection to the supply main and/or riser as practical.

AUTHORITY NOTE: Promulgated in accordance with R.S. 40:4(A)(7) and R.S. 40:5(2)(3)(7)(9)(16)(17)(20).

HISTORICAL NOTE: Promulgated by the Department of Health and Hospitals, Office of Public Health, LR 38:

§619. Water Distribution Pipe, Tubing and Fittings

Editor's Note: The text in this Section will be effective on January 1, 2013.

A. General. Water distribution pipe, tubing and fittings shall comply with the following.

1. Minimum working pressure for plastic hot and cold piping material installed inside of the foundation walls shall be 100 psi (689.5 kPa) at 180°F (82°C), with permanent identification markings.

2. Materials subject to corrosion shall be protected when installed in corrosive soils. Approved fittings shall be

used on the water distribution system and the water supply system, except that changes of direction in copper tube (ASTM B 88) may be made with bends having a radius of not less than four diameters of the tube, providing that such bends are made by use of forming equipment which does not deform or create loss in cross-sectional area of the tube. If allowed by the manufacturer, bends of pressure-rated plastic pipe listed in Table 603 shall be installed to conform with the manufacturer's recommendations but in no case shall the bend radius be less than the requirements contained within §§619.A.5 through 619.A.8, as applicable.

3. All potable water pipes, pipe fittings, plumbing fittings, or fixtures for the water distribution system shall be evaluated and listed as conforming to NSF/ANSI 372. Any solder or flux which is used in the installation or repair of any plumbing including, but not limited to, water distribution pipes in a residential or nonresidential facility providing water for human consumption shall be lead free.

a. Exception. The lead free requirement of Paragraph 3 shall not apply to:

i. leaded joints necessary for the repair of existing cast iron pipes;

ii. pipes, pipe fittings, plumbing fittings, or fixtures, including backflow preventers, that are used exclusively for nonpotable services such as manufacturing, industrial processing, irrigation, outdoor watering, or any other uses where the water is not anticipated to be used for human consumption; or,

iii. toilets, bidets, urinals, fill valves, flushometer valves, tub fillers, shower valves, service saddles, or water distribution main gate valves that are 2 inches in diameter or larger.

4. All pipes and pipe fittings shall conform to the standards listed in Table 603. All solder and flux shall conform to the applicable standard(s) listed in Table 303.

5. Bends of cross-linked polyethylene (PEX) plastic tubing shall be installed to conform to the manufacturer's recommendations but in no case shall the bend radius be less than the following:

a. When bent with the coil-a bending radius equivalent to or greater than 8 times the outside diameter of the tubing shall be maintained. Outside diameter is equal to the inside nominal diameter plus 1/8-inch.

b. When bent against the coil-a bending radius equivalent to or greater than 24 times the outside diameter of the tubing shall be maintained. Outside diameter is equal to the inside nominal diameter plus 1/8-inch.

6. Because the linear expansion rate for cross-linked polyethylene (PEX) tubing is about 1 inch/10°F for each 100 feet (30 m) of tubing, it should not be rigidly anchored to any support in order to allow for freedom of movement during expansion and contraction. When installing long runs of tubing, a longitudinal clearance of 1/8 to 3/16 inch per foot of run should be allowed to accommodate for thermal expansion. PEX tubing, where it passes through concrete or a similar building material which would not allow for freedom of linear expansion, shall be provided with a pipe sleeve of Schedule 40 pipe which shall be built into the foundation, footing, floor, wall or ceiling. Such pipe sleeve shall be of sufficient inside diameter to allow for the free expansion and contraction of the PEX tubing and to prevent any rubbing action.

7. The maximum recommended spacing between horizontal supports for cross-linked polyethylene (PEX) tubing is 32 inches (813 mm) for nominal tubing diameters from 1/4- inch through 2-inch. It should not be rigidly secured to a joist or stud but should be secured with smooth plastic strap hangers, which permit ease of movement during expansion or contraction. Valve and fixture connections to which PEX pipe is connected shall be rigidly anchored.

8. Bends of chlorinated polyvinyl chloride (CPVC) plastic pipe shall be installed to conform to the manufacturer's recommendations but in no case shall the bend radius be less than the following:

a. A bending radius equivalent to or greater than 18 inches (457 mm) for 1/2 and 3/4-inch inside nominal diameter piping.

b. A bending radius equivalent to or greater than 24 inches (610 mm) for 1-inch inside nominal diameter piping.

B. Materials Above Ground. Materials for water distribution pipes and tubing shall be brass, copper water tube minimum type L (i.e., type M copper is prohibited), stainless steel water pipe or tubing (Types 304/304L and 316/316L only), cast iron pressure pipe, ductile-iron, galvanized steel, pressure-rated polypropylene (PP), chlorinated polyvinyl chloride (CPVC) or cross-linked polyethylene (PEX) plastic pipe or tubing, all to be installed with approved fittings and bends; except that changes in direction in copper tube (ASTM B 88) may be made with bends having a radius of not less than four diameters of the tube, providing that such bends are made by use of forming equipment which does not deform or create a loss in cross-sectional area of the tube. Translucent PEX plastic pipe or tubing, when installed above ground, shall not be exposed to direct or indirect sunlight.

C. Materials Below Ground. Inaccessible water distribution piping under slabs shall be copper water tube minimum type L (i.e., type M copper is prohibited), brass, stainless steel water pipe (types 304/304L and 316/316L only), cast iron pressure pipe, ductile-iron pipe, chlorinated polyvinyl chloride (CPVC), pressure-rated polypropylene (PP) or cross-linked polyethylene (PEX) plastic pipe or tubing, all to be installed with approved joining methods or bends. All copper, brass and stainless steel joints below a building slab shall be brazed and/or welded in accordance with §315.D, and §§621.D through 621.G, as appropriate. Heat fused joints for polypropylene shall be made in accordance with §621.E.3. With the exception of heat fused polypropylene, all other joints and fittings for plastic pipe below a building slab are prohibited. Any material subject to corrosion shall be protected when used in corrosive soils.

D. Valves. Valves shall conform to the standards listed in Table 619.D.

Table 619.D
Valve Standards

Materials	Standards
Valves, Bronze Gate, Globe, Angle, Check	MSS SP-80
Valves, Cast Iron	ASTM A 126
Valves, Ball	MSS SP-72. MSS SP-110
Valves, Resilient-Seated Gate	AWWA C509

AUTHORITY NOTE: Promulgated in accordance with R.S. 40:4(A)(7), R.S. 40:5(2)(3)(7)(9)(16)(17)(20), and R.S. 40:1299.27.1.

HISTORICAL NOTE: Promulgated by the Department of Health and Hospitals, Office of Public Health, LR 38:

§621. Joints

Editor's Note: The text in this Section will be effective on January 1, 2013.

A. General. This Section contains provisions applicable to joints specifically for water service and distribution piping. Provisions for those joining methods which are applicable to more than one piping system are contained in Chapter 3.

B. Soldered Joints. Soldered joints for tubing shall be made with approved fittings (see §621.F). Surfaces to be soldered shall be cleaned bright, all burrs shall be removed and the tubing shall be returned to full bore. The joints shall be properly fluxed and made with approved solder (see Table 303). All solder and flux used in the installation or repair of water supply systems, water distribution systems, and water service pipe shall be lead free. Soldered joints should not be made closer than 18 inches (457 mm) to an installed plastic-to-metal adapter in the same water line.

1. Exception. The lead free requirement of Subsection B shall not apply to:

a. leaded joints necessary for the repair of existing cast iron pipes;

b. pipes, pipe fittings, plumbing fittings, or fixtures, including backflow preventers, that are used exclusively for nonpotable services such as manufacturing, industrial processing, irrigation, outdoor watering, or any other uses where the water is not anticipated to be used for human consumption; or

c. toilets, bidets, urinals, fill valves, flushometer valves, tub fillers, shower valves, service saddles, or water distribution main gate valves that are 2 inches in diameter or larger.

C. Flared Joints. Flared joints for soft tempered copper water tube shall be made with fittings meeting approved standards. The tubing shall be expanded with a proper flaring tool.

D. Brazed Joints. Brazed joints shall be made in accordance with the provisions of Section 6 of ANSI B31.1. Brazed joints should not be made closer than 18 inches (457 mm) to an installed plastic-to-metal adapter in the same water line.

E. Joints for Plastic Water Service and Water Distribution Pipe and Fittings. Joints for plastic water service and water distribution pipe and fittings shall comply with the following.

1. General. Plastic pipe and fittings for water service piping and water distribution piping may be of the insert type, compression type, solvent cemented (see Table 303 and §313.H.1), heat fused, pressure-lock, or may be hot or cold flared as recommended by the manufacturer or the Plastic Pipe Institute for the particular materials being used. With the exception of heat fused polypropylene, all other joints and fittings for plastic pipe are prohibited on inaccessible water distribution piping under slabs.

2. Polyethylene Water Service. Stiffener inserts used with compression type fittings shall not extend beyond the clamp or nut of the fitting. Pipe shall be cut square, using a cutter designed for plastic pipe and ends shall be chamfered to remove sharp edges. Electro and heat fusion joints for Polyethylene pipe and fittings shall be made in accordance with ASTM F 1290 and ASTM F 2620, respectively. Flared joints shall be permitted where recommended by the manufacturer and made by the use of a tool designed for that operation.

3. Polypropylene Piping and Joints. Heat fused joints for polypropylene pipe and fitting joints shall be made in accordance with ASTM D 2657.

F. Copper Water Pipe and Tubing Joints for copper water pipe and tubing shall be formed either by the appropriate use of approved brass, bronze or wrought copper water fittings, properly soldered or brazed together, or by means of approved flare fittings as provided in §621.C.

G. Stainless Steel Pipe and Joints. Joints and fittings for stainless steel pipe shall be installed in accordance with the manufacturer's installation instructions and approved standards. Welded joints shall be either fusion or resistance welded based on the selection of the base metal. Chemical composition of the filler metal shall comply with AWS A5.9 based on the alloy content of the piping material.

H. Special Joints. The special joints identified below shall comply with the following.

1. Copper Water Tubing or Stainless Steel Tubing to Threaded Pipe Joints. Joints from copper water tubing or stainless steel tubing to threaded pipe shall be formed by the use of bronze or copper adapter fittings. The joint between the copper tube or stainless steel tube and fittings shall be properly soldered or brazed, and the connection between the threaded pipe and the fitting shall be made with a standard pipe size threaded joint.

2. Ground Joint Brass Connections. Ground joint brass connections which allow adjustment of tubing but provide a rigid joint when made up shall not be considered as slip joints.

3. Plastic Pipe to Other Materials. Joints between plastic pipe and other materials shall be formed with proper adaption fittings as furnished by the manufacturer.

4. Unions. Unions in the water service pipe and water distribution system shall be metal-to-metal with ground seats.

AUTHORITY NOTE: Promulgated in accordance with R.S. 40:4(A)(7) R.S. 40:5(2)(3)(7)(9)(16)(17)(20), and R.S. 40:1299.27.1.

HISTORICAL NOTE: Promulgated by the Department of Health and Hospitals, Office of Public Health, LR 38:

§623. Safety Devices

A. Shower Temperature Control Devices.

1. Multiple (gang) Showers. Multiple (gang) showers, when supplied by a single temperature controlled water supply pipe, shall be controlled by a master temperature actuated mixing valve conforming to ASSE 1069, or each shower shall be individually controlled by an automatic compensating scald preventative valve of the pressure balancing, thermostatic or combination pressure balance/thermostatic mixing valve type conforming to ASSE 1016, ASME A 112.18.1 or CSA B125.1. Handle position stops or other limit setting devices shall be provided on such valves and shall be adjusted in accordance with manufacturer's instructions at time of installation to deliver a maximum mixed water outlet temperature of 120°F (48.3° C).

2. Individual Shower and Shower/Bath Combinations. Shower and shower/bath combinations in all buildings shall be provided with an automatic compensating scald preventative valve of the pressure balance, thermostatic, or combination pressure balance/thermostatic mixing valve type which provides scald and thermal shock protection for the rated flow rate of the installed showerhead. These valves shall conform to ASSE 1016, ASME A 112.18.1 or CSA B125.1 and shall be equipped with a means to limit the maximum setting of the valve to 120°F (48.3°C), which shall be field adjusted in accordance with the manufacturer's instructions at the time of installation.

B. Public Lavatory Temperature Control Devices. The temperature of the water delivered from public use lavatories or other public hand-washing fixtures shall be limited to a maximum temperature of 120°F (48.3° C) by a temperature control device that conforms to ASSE 1070.

C. Bathtub and Whirlpool Temperature Control Devices. The temperature of the water delivered from bathtubs and whirlpools shall be limited to a maximum temperature of 120°F (48.3° C) by a temperature control device that conforms to ASSE 1070, except where such protection is otherwise provided for in accordance with §623.A.

Table 623
Temperature Control Device Standards

Materials	Standards
Automatic Compensating Valves for Individual Shower and Tub-Shower Combinations	ASSE 1016
Temperature Actuated Mixing Valves for Hot Water Distribution Systems	ASSE 1017
Automatic Temperature Control Mixing Valves	ASSE 1069
Water Temperature Limiting Devices	ASSE 1070
Plumbing Supply Fittings	ASME A112.18.1, CSA B125.1

D. Thermal Expansion Control. Thermal expansion shall be controlled in accord with the following requirements.

1. If water is heated and stored in a consumer's system and the system has been closed by the installation of a backflow preventer or a pressure reducing valve, a thermal expansion control shall be installed at an accessible location between the checking device and the water heating equipment to limit thermal expansion of the water being heated to not more than 80 psi (552 kPa) static pressure at any fixture on the system. A potable water expansion tank or auxiliary relief valve set at 80 psi (552 kPa) shall be acceptable.

2. The auxiliary relief valve shall be in addition to the water heater safety relief valve. This thermal expansion control device shall be designed and trimmed for repeated operation. The valve shall be a minimum 1/2-inch pipe size, shall be adjustable and calibrated, and shall include a tag describing its function.

AUTHORITY NOTE: Promulgated in accordance with R.S. 40:4(A)(7) and R.S. 40:5(2)(3)(7)(9)(16)(17)(20).

HISTORICAL NOTE: Promulgated by the Department of Health and Hospitals, Office of Public Health, LR 38:

§625. Miscellaneous

A. Drain Cock. All storage tanks shall be equipped with adequate drain cocks.

B. Line Valves. Valves in the water supply distribution system, except those immediately controlling one fixture supply, when fully opened shall have a cross-sectional area at the smallest orifice or opening through which the water flows at least equal to the cross-sectional area of the nominal size of the pipe in which the valve is installed.

C. Water Used for Processing. Water used for cooling of equipment or similar purposes shall not be returned to the potable water distribution system, water service pipe, or water supply system. When discharged to the building drainage system or other point of disposal, the waste water shall be discharged through an air gap (water distribution).

D. Trap Primers Connected Directly to a Potable Water System. Trap primers which connect directly to a potable water system shall comply with the following.

1. Trap primers which are connected directly to a potable water system shall be constructed with integral air gaps. In addition to the integral air gap, additional backflow protection shall be provided by the installation of either an approved air gap device on the discharge line from each trap primer, or by the installation of an approved reduced pressure principle backflow preventer on the trap primer's individual potable water supply line.

2. Trap primers (and associated air gap device and/or reduced pressure principle backflow preventer) shall be accessible and shall not be concealed by building or other construction.

3. Trap primer drains shall be constructed to completely drain by gravity after each cycle of operation and, in no case, shall the drain be connected to the trap below the top of the trap water seal or trap outlet weir.

4. Trap primer air gaps, when required, shall be located a minimum of 6 inches (152 mm) above the flood level of the floor drain or receptor served.

5. Trap primers which connect to the potable water system shall be connected to the cold water supply in accordance with the manufacturer's recommendations.

6. Separate cutoff valves shall not be installed between a trap primer and its water supply except that a cutoff valve for an individual fixture shall control both the water supply to the trap primer and the individual fixture to assure a constant supply to the primer.

AUTHORITY NOTE: Promulgated in accordance with R.S. 40:4(A)(7) and R.S. 40:5(2)(3)(7)(9)(16)(17)(20).

HISTORICAL NOTE: Promulgated by the Department of Health and Hospitals, Office of Public Health, LR 38:

§627. Water Treatment Units

A. Drinking water treatment units shall meet the requirements of NSF 42 and 53. Units are designed to be used for the reduction of specific contaminates from potable drinking water, such contaminants being considered as potential health hazards or affecting the aesthetic quality characteristics of potable drinking water.

B. Reverse osmosis drinking water treatment systems shall meet the requirements of NSF 58. Systems are designed to be used for the reduction of specific contaminates from potable drinking water supplies considered to be microbiologically safe and of known quality (except that claims for the reduction of filterable cysts may be permitted). Systems covered by this standard are intended for reduction of total dissolved solids (TDS) and other contaminants specified therein.

C. Waste and discharge from reverse osmosis or other types of water treatment units shall enter the drainage system through an air gap (drainage system).

AUTHORITY NOTE: Promulgated in accordance with R.S. 40:4(A)(7) and R.S. 40:5(2)(3)(7)(9)(16)(17)(20).

HISTORICAL NOTE: Promulgated by the Department of Health and Hospitals, Office of Public Health, LR 38:

§629. Additional Water Supply and Distribution Provisions

A. Additional provisions for water supply and distribution are found in the following:

1. §609.F—Cross-Connection Control;
2. Chapter 13—Medical Facilities Plumbing Systems;
3. Chapter 15—Travel Trailers and Travel Trailer Parks;
4. Chapter 16—Mobile/Manufactured Homes and Mobile/Manufactured Home Parks; and,
5. §1805, Appendix B—Sizing of Water Piping System.

AUTHORITY NOTE: Promulgated in accordance with R.S. 40:4(A)(7) and R.S. 40:5(2)(3)(7)(9)(16)(17)(20).

HISTORICAL NOTE: Promulgated by the Department of Health and Hospitals, Office of Public Health, LR 38:

Chapter 7. Sanitary Drainage

§701. General

A. Scope. The provisions of this Chapter shall govern the materials, design, construction, and installation of sanitary drainage systems.

B. Damage to Drainage System, Sewerage System, or Sewage-Treatment Plant. Wastes which are detrimental to, and/or able to cause damage or operational problems to, either the drainage system, the sewerage system, or the functioning of the sewage-treatment plant shall be treated and disposed of in accordance with §703.F, §1005, or an approved pretreatment system as directed by the plumbing official.

C. Individual Sewerage System. Where a community sewerage system is not available, an individual sewerage system shall be of a type that is acceptable and approved by the state health officer. See Chapter 17.

D. Tests. The sanitary drainage system shall be tested in accordance with §319.

E. Engineered Systems. Engineered sanitary drainage and venting systems shall conform to the provisions of Chapter 12.

AUTHORITY NOTE: Promulgated in accordance with R.S. 40:4(A)(7) and R.S. 40:5(2)(3)(7)(9)(16)(17)(20).

HISTORICAL NOTE: Promulgated by the Department of Health and Hospitals, Office of Public Health, LR 38:

§703. Materials

A. General. Pipe, tubing, and fittings for drainage systems shall conform to the standards listed in Table 703.

B. Specific Type. Standards listed in Table 703 apply to the specific materials approved for use and, as indicated in the various Sections in this Chapter, as they apply to the drainage system.

C. Aboveground Piping Within Buildings and Piping in Raceways or Tunnels. Aboveground piping within buildings and piping in raceways or tunnels shall comply with the following.

1. Soil and waste piping for drainage systems shall be of cast iron, galvanized steel, type 304 or 316L stainless steel, brass or copper pipe, type DWV copper tube, Schedule 40 plastic piping or borosilicate glass.

2. Vertical soil, waste and vent stacks shall be designed to control expansion and contraction, in accordance with accepted engineering practice, to the satisfaction of the plumbing official.

D. Underground Piping Within Buildings. All underground drains within buildings shall be cast iron soil pipe, type 316L stainless steel, ductile-iron pipe, type DWV copper, heavy schedule borosilicate glass, or Schedule 40 plastic piping. Materials subject to corrosion shall be protected when installed in corrosive soils.

Table 703
Drainage System Materials

Materials	Standards
Nonmetallic Piping Clay Drain Tile	ASTM C 4
Clay Pipe Compression Joints	ASTM C 425
Clay Sewer Pipe	ASTM C 700, Markings shall include ASTM number
Concrete Drain Tile	ASTM C 412/C 412M
Concrete Perforated Pipe	ASTM C 444/C 444M
Concrete Reinforced Culverts	ASTM C 76/C 76M, For storm drains only
Concrete Reinforced Sewer Pipe	ASTM C 361/C 361M, For storm drains only
Concrete Non-reinforced Sewer Pipe	ASTM C 14, For storm drains only
Sewer Manholes Precast Reinforced	ASTM C 478/C 478M
Concrete (Steel Cylinder Type)	FSS-P-381
Plastic Pipe and Fittings ABS-DWV Pipe and Fittings	ASTM D 2661, Listed, See §303.H.2
ABS Sewer Pipe and Fittings (for outside building sewers, storm drains and storm sewers)	ASTM D 2751, See §§705.A, 1101.E, 1103.B, and 1103.D, Installation: ASTM D 2321
Acrylonitrile-Butadiene-Styrene (ABS) Schedule 40 Plastic Drain Waste, and Vent Pipe with a Cellular Core	ASTM F 628, Listed
Chlorinated Poly (Vinyl Chloride) (CPVC) Pipe and Fittings for Chemical Waste Drainage Systems	ASTM F 2618
Coextruded Composite Pipe	ASTM F 1488, See §§303.H.2, 303.H.4, 705.A, 1101.E, 1103.B, 1103.D
Coextruded Composite Drain, Waste, and Vent Pipe (DWV)	ASTM F 1499, See §§303.H.2, 303.H.4, 705.A, 1101.E, 1103.B, 1103.D.
Coextruded PVC Plastic Pipe with a Cellular Core	ASTM F 891, See §§303.H.2, 303.H.4, 705.A, 1101.E, 1103.B, and 1103.D
Flexible Elastomeric Non-Pressure Joints	ASTM D 3212, See §303.H
Large Diameter Ribbed PVC Sewer Pipe and Fittings	CAN/CSA-B182.4
Polyolefin Pipe and Fittings for Corrosive Waste Drainage Systems	ASTM F 1412
Polyvinylidene Fuoride (PVDF) Corrosive Waste Drainage Systems	ASTM F1673
PVC-DWV Pipe and Fittings	ASTM D 2665, Listed, See §303.H.2
ABS and PVC Plastic Tube and Tubular Fittings	ASTM F 409
Type PSM PVC Sewer Pipe & Fittings (for outside building sewers, storm drains and storm sewers)	ASTM D 3034, See §§705.A, 1101.E, 1103.B, and 1103.D ASTM D 2321, Installation
Type PSP PVC Sewer Pipe & Fittings (for outside building sewers, storm drains and storm sewers)	ASTM D 2321, Installation
Ferrous Pipe and Fittings Cast Iron Soil Pipe and Fittings	ASTM A 74, CISPI HS
Cast Iron Hubless Pipe and Fittings	CISPI Std. 301, ASTM A 888
Ductile-Iron Gravity Sewer Pipe	ASTM A 746
Hubless Cast Iron Sanitary System	CISPI Std. 310

Table 703 Drainage System Materials	
Materials	**Standards**
Manhole Top Frames and Covers	ASTM A 48/A 48M
Stainless Steel Drainage Systems for Sanitary DWV, Storm, and Vacuum Applications, Above- and Below Ground (Type 304 is prohibited from underground use in these drainage systems)	ASME A112.3.1
Nonferrous Pipe and Fittings Cast Copper Alloy Solder-Joint Drainage Fittings DWV	ASME B 16.23
Cast Copper Alloy Solder Joint Fittings for Sovent Drainage Systems	ANSI B 16.32
Copper Drainage Tube DWV	ASTM B 306
Corrosion-Resistant High-Silicon Iron Castings	ASTM A 518/A 518M
Lead Pipe, Bends and Traps	FS WW-P-325
Welded Copper and Copper Alloy Heat Exchanger Tube	ASTM B 543
Wrought Copper and Wrought Copper Alloy Solder-Joint Drainage Fittings For Plumbing Drainage Waste and Vents	ASME B 16.29
Wrought Copper and Copper Alloy Solder-Joint Fittings for Sovent Drainage Systems	ANSI B 16.43
Glass Pipe Borosilicate Glass Pipe and Fittings for DWV Applications	ASTM C 1053

E. Fittings. Fittings on the drainage system shall be compatible to the type of piping used. Fittings on threaded pipe shall be of the recessed drainage type. See §311.

F. Acid Soil and Waste Piping. Acid soil and waste piping for drainage systems shall be of a high silicon cast iron complying with ASTM A 518/A 518M, borosilicate glass complying with ASTM C 1053, chlorinated poly (vinyl chloride) (CPVC) complying with ASTM F 2618, polyolefin pipe complying with ASTM F 1412, polyvinylidene fluoride (PVDF) complying with ASTM F 1673, or other materials approved by the plumbing official. Joints shall be made in conformance with the manufacturer's recommendations. Acid soil, waste and vent piping shall not be connected to the conventional plumbing system.

1. Neutralizing Device. In no case shall corrosive liquids, spent acids, or other harmful chemicals which might destroy or injure a drain, sewer, soil or waste pipe, or which might create noxious or toxic fumes, discharge into the plumbing system without being thoroughly diluted or neutralized by passing through a properly constructed and acceptable dilution or neutralizing device (generally, utilizing limestone chips). Such device shall be automatically provided with a sufficient intake of diluting water or neutralizing medium, so as to make its contents noninjurious before being discharged into the soil or sewage system.

AUTHORITY NOTE: Promulgated in accordance with R.S. 40:4(A)(7) and R.S. 40:5(2)(3)(7)(9)(16)(17)(20).

HISTORICAL NOTE: Promulgated by the Department of Health and Hospitals, Office of Public Health, LR 38:

§705. Building Sewer

A. Separate Trenches. The building sewer, when installed in a separate trench from the water service pipe, shall be cast iron sewer pipe, vitrified clay sewer pipe, or plastic piping (minimum SDR 35 or heavier). Joints shall be watertight and rustproof and all material shall be installed according to the manufacturer's recommendations (see §705.H.). All pipe and fittings shall bear the manufacturer's name or trademark.

B. Sewer in Filled Ground. A building sewer or building drain installed in unstable fill or unstable ground shall be of cast iron pipe, except that nonmetallic drains may be laid upon an approved continuous supporting system if installed in accordance with §705.A.

C. Sanitary and Storm Sewers. Where separate systems of sanitary drainage and storm drainage are installed in the same property, the sanitary and storm building sewers or drains may be laid side by side in one trench.

D. Old House Sewers and Drains. Old building sewers and building drains may be used in connection with new building or new plumbing and drainage work only when they are found, on examination and test, to conform in all respects to the requirements governing new house sewers. The plumbing official shall notify the owner to make the changes necessary to conform to this Part.

E. Cleanouts on Building Sewers. Cleanouts on building sewers shall be located as set forth in §717.B.

F. Minimum Size Building Sewer. No building sewer shall be less than 4 inches in size with the exception of force lines.

G. Backwater Valves. Backwater valves shall comply with the following.

1. Fixture Branches. Backwater valves shall be installed in the branch of the building drain which receives only the discharge from fixtures located below grade$_{(G)}$. Where fixtures are located below the level of the top of the first upstream manhole, said fixtures shall be protected by a backwater valve.

2. Material. Backwater valves shall have all bearing parts of corrosion resistant material. Backwater valves shall comply with ASME A 112.14.1 or CAN/CSA B181.1, CAN/CSA B181.2.

3. Seal. Backwater valves shall be so constructed as to insure a mechanical seal against backflow.

4. Diameter. Backwater valves, when fully opened, shall have a capacity not less than that of the pipes in which they are installed.

5. Location. Backwater valves shall be so installed to be accessible for service and repair.

H. Installation of Building Sewers. The installation of building sewers shall comply with the following. [formerly Appendix I - Installation of Building Sewers]

1. Cast Iron Soil Pipe. Cast iron soil pipe shall be installed in accord with the following requirements.

a. Trench Construction. Pipe shall be installed in as narrow a trench as possible while providing sufficient width for joint assembly.

b. Bedding. Pipe shall be installed so that the trench bottom provides support of the pipe barrel. Hub holes and coupling holes shall be provided.

c. Rock. When rock larger than 1 1/2 inches (38.1 mm) in diameter is encountered during installation, it shall be removed from the trench bottom and a 6-inch (152.4 mm) layer of selected fill shall be added to provide uniform support.

d. Backfilling. Backfill trench following test. When backfilling, care shall be taken to protect the pipe from large

rocks, stone, or frozen fill material which could damage the pipe.

2. Clay Pipe. Clay pipe shall be installed in accord with the following requirements.

a. Trench and Material Preparation. The trench and material preparation for clay pipe shall be as follows:

i. Width of trenches in which clay pipe is to be installed shall be such as to provide adequate space for workmen to place and joint the pipe properly.

ii. Bell holes shall be excavated so that, after placement, only the barrel of the pipe receives bearing pressure from the trench bottom.

iii. Preparation of the trench bottom and placement of the pipe shall be carefully done so that, when in final position, the pipe is true to line and grade$_{(S)}$.

iv. Pipe shall be protected during handling against impact shock and free fall. No pipe shall be used in the work which does not conform to the appropriate ASTM standard.

b. Pipe Laying and Joining. The pipe laying and joining of clay pipe shall be as follows:

i. The laying of pipe in finished trenches shall be commenced at the lowest point, with the spigot ends pointing in the direction of flow.

ii. All pipe shall be laid with ends abutting and true to line and grade$_{(S)}$. They shall be carefully centered, so that when laid they will form a sewer with a uniform invert.

iii. Pipe shall be set firmly according to line and grade$_{(S)}$, and, preparatory to making pipe joints, all surfaces of the portion of the pipe to be joined shall be cleaned and dried. The joints shall then be carefully adjusted and filled with the jointing material.

iv. Trenches shall be kept water-free during joining and for a sufficient period thereafter to allow the jointing material to become fully set and completely resistant to water penetration. Trenches shall be backfilled immediately after pipe is laid therein to prevent dislocation of the sewer line or jointing material, except when factory applied flexible compression joints are used.

c. Testing. The clay pipe sewer line shall be tested as required in §319, or as prescribed by the co-local plumbing official.

3. Plastic Pipe. Plastic pipe shall be installed in accord with the following requirements.

a. Trenching and Supporting. The trenching and supporting of plastic pipe shall be as follows:

i. Trenching. Excavate to desired grade$_{(S)}$. Use template to detect high spots and holes. Fill holes and depressions, tamping thoroughly.

ii. Where trenching conditions are difficult, pipe shall be uniformly supported throughout using treated timber, concrete pad, sand, or select backfill properly tamped.

b. Laying, Bedding and Backfilling. The laying, bedding and backfilling of plastic pipe shall be as follows.

i. Lay the pipe line as described. Be sure the pipe is bedded in the selected backfill one-fourth to one-third of the pipe diameter. Under no circumstances should bricks or other supports be used to bring pipe to grade$_{(S)}$.

ii. After pipe is bedded and checked for grade$_{(S)}$, additional selected backfill is placed by shovel at sides and over top of pipe and tamped. By careful tamping at this point, the pipe can support a much greater load and is less likely to be subsequently disturbed or shifted.

iii. Reasonably clean backfill shall be placed 12 inches (305 mm) over the pipe.

iv. The trench may now be backfilled by any conventional means, bulldozer, loader, etc., and the pipe is protected.

AUTHORITY NOTE: Promulgated in accordance with R.S. 40:4(A)(7) and R.S. 40:5(2)(3)(7)(9)(16)(17)(20).

HISTORICAL NOTE: Promulgated by the Department of Health and Hospitals, Office of Public Health, LR 38:

§707. Drainage Piping Installation

A. Horizontal Drainage Piping. Horizontal drainage piping shall be installed at a uniform slope but at slopes not less than permitted in §§707.B through 707.D.

B. Small Piping. Horizontal building drainage piping less than 3-inch diameter shall be installed with a fall of not less than 1/4 inch per foot (21 mm per meter).

C. Large Piping. Horizontal building drains 3-inch diameter or larger shall be installed with a fall of not less than 1/8 inch per foot (10 mm per meter).

D. Minimum Velocity. Where conditions do not permit building drains and sewers to be laid with a fall as great as that specified, then a lesser slope may be permitted provided the computed velocity will be not less than 2 fps (0.61 m/s).

AUTHORITY NOTE: Promulgated in accordance with R.S. 40:4(A)(7) and R.S. 40:5(2)(3)(7)(9)(16)(17)(20).

HISTORICAL NOTE: Promulgated by the Department of Health and Hospitals, Office of Public Health, LR 38:

§709. Joints

A. General. This Section contains provisions applicable to joints specific to sanitary drainage piping. Provisions for those joining methods which are applicable to more than one piping system are contained in Chapter 3.

B. Caulked Joints. Caulked joints for cast-iron hub-and-spigot soil pipe shall be firmly packed with oakum or hemp and filled with molten lead not less than 1-inch (25.4 mm) deep and extending not more than 1/8 inch (3.18 mm) below rim of hub. No paint, varnish, or other coatings shall be permitted on the jointing material until after the joint has been tested and approved.

C. Joints for Plastic Pipe and Fittings. Refer to Section §313.H for ABS and PVC joints.

D. Elastomeric Compression Gasket for Cast Iron Soil Pipe. Elastomeric compression gasketed joints for cast iron soil pipe shall comply with the following.

1. A positive-seal one piece elastomeric compression type gasket may be used for joining hub and spigot cast iron soil pipe as an alternate for lead or oakum joints. The joint is formed by inserting an approved gasket in the hub. The inside of the gasket is lubricated and the spigot end of the pipe is pushed into the gasket until seated, thus affecting a positive seal.

2. A positive-seal one piece elastomeric compression-type gasket for joining hub and spigot cast iron soil pipe may be used for drainage and waste systems above and below ground.

3. Compression gaskets for cast iron soil pipe shall be neoprene, marked as such, with ASTM C 564.

E. Hubless Cast Iron Soil Pipe System. Joints for hubless cast iron soil pipe shall comply with the following.

1. Joints for hubless cast iron soil pipe shall be made with an approved gasket and stainless steel retaining sleeve.

2. Stainless steel couplings and gaskets complying with standards listed in Table 303 shall have identifying markers to indicate compliance.

3. Installation of the hubless cast iron soil pipe system shall be in accordance with CISPI 310 or the manufacturer's recommendation.

F. Borosilicate Glass Pipe. Joints for borosilicate glass pipe shall comply with the following.

1. Glass to glass connections shall be made with a bolted compression type stainless steel (300 series) coupling with contoured acid-resistant elastomer compression ring and a fluorocarbon polymer inner seal ring.

2. Joints between glass pipe and other types of piping material shall be made with adapters having a tetrafluoroethylene (TFE) seal and according to manufacturer's recommendations.

3. Caulked joints shall conform with §709.B except that acid resistant rope and acid proof cement may be used.

G. Joints for Ductile-Iron Gravity Sewer Pipe (bell and spigot). Joints in ductile-iron gravity sewer pipe shall be of the push-on joint type using a single oil resistant gasket joint. The gasket and the annular recess in the bell end of the pipe will be designed and shaped so that the gasket is locked in place against displacement. The oil resistant gaskets shall conform to AWWA C111 or ANSI A21.11 and shall comply with the performance requirements of the standard.

AUTHORITY NOTE: Promulgated in accordance with R.S. 40:4(A)(7) and R.S. 40:5(2)(3)(7)(9)(16)(17)(20).

HISTORICAL NOTE: Promulgated by the Department of Health and Hospitals, Office of Public Health, LR 38:

§711. Use of Joints

A. Clay Sewer Pipe. Joints in vitrified clay pipe or between such pipe and other pipe shall be formed as provided in §313.D, §313.E, or §711.D.

B. Concrete Sewer Pipe (for storm drains only). Joints in concrete sewer pipe or between such pipe and metal pipe shall be formed as prescribed in §313.D, §313.E, or §711.D.

C. Cast Iron Soil Pipe. Joints in cast iron pipe shall be either caulked, positive-seal elastomeric compression gasket or a neoprene gasket and stainless steel retaining sleeve, as provided in §313.B, §709.B, §709.D, and §709.E.

D. PVC Transition Fittings for Dissimilar Pipe in Building Sewers. PVC transition fittings for dissimilar pipe in building sewers shall comply with the following.

1. PVC transition fittings for dissimilar pipe in building sewers shall be installed according to manufacturers' instructions.

2. Joint Sealer Adapter—to adapt cast iron, plastic, fiber, asbestos cement, clay or copper pipe to all makes of dissimilar drain pipes with PVC joint.

3. Flexible Coupling—to adapt any two of the following pipe of the same outside diameter or reducing sizes of any combination of two: clay, concrete, cast iron, steel, copper (DWV), asbestos cement, fiber drain and sewer pipe, plastic drain and sewer pipe.

4. Solvent Cemented Transition Joints Between Acrylonitrile-Butadiene-Styrene (ABS) and Poly Vinyl Chloride (PVC). Solvent cements for use in transition joints between building drains and building sewers (non-pressure applications only) shall comply with ASTM D 3138.

E. Ductile Iron Pipe Without Push-On-Joints (plain end). Joints in ductile iron pipe for the building sewer without push-on-joints shall be made with a flexible coupling assembly in accordance with §313.D or in accordance with the manufacturer's instructions.

AUTHORITY NOTE: Promulgated in accordance with R.S. 40:4(A)(7) and R.S. 40:5(2)(3)(7)(9)(16)(17)(20).

HISTORICAL NOTE: Promulgated by the Department of Health and Hospitals, Office of Public Health, LR 38:

§713. Connections between Drainage Piping and Fixtures

A. Connections between drainage piping and floor outlet plumbing fixtures shall be made by means of an approved flange which is attached to the drainage piping in accordance with the provisions of this Chapter. The 4 x 3 closet flange shall be attached to the outside diameter and not to the inside diameter of the drainage piping. The floor flange shall be set on and securely anchored to the building structure.

B. Connections between drainage piping and wall hung water closets shall be made by means of an approved extension nipple or horn adapter.

C. The connection shall be bolted to the flange or carrier using corrosion resisting bolts, screws or assemblies recommended by the manufacturer.

D. An approved gasket, washer, or setting compound shall be used between the fixture and the connection. Use of commercial putty or plaster shall be prohibited as the setting compound.

AUTHORITY NOTE: Promulgated in accordance with R.S. 40:4(A)(7) and R.S. 40:5(2)(3)(7)(9)(16)(17)(20).

HISTORICAL NOTE: Promulgated by the Department of Health and Hospitals, Office of Public Health, LR 38:

§715. Prohibited Joints and Connections

A. Drainage System. Any fitting or connection which has an enlargement, chamber, or recess with a ledge, shoulder, or reduction of pipe area, that offers an obstruction to flow through the drain, is prohibited, except as stated in §727.

B. Prohibited Fittings or Connections. Fittings or connections that offer abnormal obstruction to flow shall not be used. The enlargement of a 3-inch closet bend or stub to 4 inches shall not be considered an obstruction.

AUTHORITY NOTE: Promulgated in accordance with R.S. 40:4(A)(7) and R.S. 40:5(2)(3)(7)(9)(16)(17)(20).

HISTORICAL NOTE: Promulgated by the Department of Health and Hospitals, Office of Public Health, LR 38:

§717. Cleanouts

A. Material and Design. The bodies of cleanout ferrules shall conform in thickness to that required for pipe and fittings of the same material, and they shall extend not less than 1/4-inch (6.35 mm) above the hub. For new work, the cleanout plug shall be of heavy brass or plastic not less than 1/8-inch (3.18 mm) thick and shall be provided with a raised nut or a recessed socket for removal. Both ferrule and plug shall have ASME standard tapered pipe threads. Heavy lead plugs may be used for repairing a cleanout where necessary. Nylon plastics may be used as an alternate material.

B. Location. The location of cleanouts shall comply with the following:

1. Each horizontal drainage pipe shall be provided with a cleanout at the upstream end of the pipe and in changes of direction over 45° (0.785 rad).

a. Exceptions. The following plumbing arrangements are acceptable in lieu of the upstream cleanout:

i. "P" traps connected to the drainage piping with slip joints or ground joint connections;

ii. "P" traps into which floor drains, shower drains or tub drains with removable strainers discharge;

iii. "P" traps into which the straight through type waste and overflow discharge with the overflow connecting to the branch of the tee;

iv. "P" traps into which residential washing machines discharge;

v. test tees or cleanouts in a vertical pipe above the flood-level rim of the fixtures that the horizontal pipe serves and not more than 4-feet (1219 mm) above the finish floor;

f. cleanout within 6-feet (1829 mm) of the junction of the building drain and the building sewer which may be rodded both ways; and,

g. water closets for the water closet fixture branch only.

2. Each building drain shall be provided with a cleanout within 6-feet (1829 mm) of the junction of the building drain and building sewer.

3. Cleanouts when installed in accordance with §717.B.2 may be either outside the building or when inside the building they shall be above the flood-level rim of the fixtures that the horizontal pipe serves when installed on a soil or waste stack.

4. In addition to the upstream cleanout and the cleanout of the junction of the building drain and building sewer, cleanouts shall be located along the horizontal piping so that:

a. In pipe 3-inch nominal diameter or less, cleanouts shall be located at not more than 50 ft (15.2 m) intervals; and,

b. In pipe 4 inches nominal diameter through 6 inches nominal diameter, cleanouts shall be located at not more than 80 ft (24.4 m) intervals.

C. Concealed Piping. Cleanouts on concealed piping or piping under a floor slab or piping in a crawl space of less than 24 inches (610 mm) or a plenum of any depth shall be extended through and terminate flush with the finished wall, floor or grade$_{(G)}$ or may be extended to the outside of the building. Where it is necessary to conceal a cleanout or to terminate a cleanout in an area subject to vehicular traffic, the covering plate, access door or cleanout shall be of the approved type designed and installed for this purpose.

D. Direction of Flow. Cleanouts shall be installed to permit cleaning in the direction of flow. Line cleanouts which may be rodded both ways shall be used whenever practical.

E. Use for New Fixtures Prohibited. Cleanout plugs shall not be used for the installation of new fixtures or floor drains, except where approved in writing by the plumbing official and where another cleanout of equal access and capacity is provided.

F. Trap Cleanouts. Cleanouts for traps shall comply with the following.

1. Each fixture trap, except those cast integrally or in combination with fixtures in which the trap seal is accessible, or except when a portion of the trap is readily removable for cleaning purposes, shall have an accessible brass trap screw of ample size. Cleanout plugs or caps shall be watertight and gastight. Nylon plastics may be used as an alternate material.

2. Cleanouts on the seal of a trap shall be made tight with threaded cleanout plug and approved washer. Where glass traps are required, slip joints or couplings must have a tetrafluoroethylene (TFE) seal.

G. Manholes. Sewer manholes shall be waterproofed, constructed of poured-in-place concrete or precast concrete pipe sections conforming to ASTM C 478. Bottoms shall be concrete poured on stabilized soil or aggregate subbase with inside surfaces sloped a minimum of 2 inches per foot to the pipe flow channel. All pipe connections and joints shall be sealed with approved waterstop or gasket materials and grouted. Manhole top frames and covers shall be Class 30 gray cast iron conforming to ASTM A 48/A 48M, machined for proper fit of covers in frame, coated with coal-tar pitch varnish and not less than 93 percent of the specified weight for each casting. Covers shall have the word "SEWER" cast in large letters. Similar, sealed covers with gaskets and cap screws or bolts shall be used where subject to flooding. See Figure 7 in §1807, Appendix C.

AUTHORITY NOTE: Promulgated in accordance with R.S. 40:4(A)(7) and R.S. 40:5(2)(3)(7)(9)(16)(17)(20).

HISTORICAL NOTE: Promulgated by the Department of Health and Hospitals, Office of Public Health, LR 38:

§719. Size of Cleanouts

A. Pipes Less Than 8-inch Nominal Size. For pipes less than 8-inch nominal size, cleanouts shall be the same nominal size as the pipe to which they are connected.

1. Exceptions

a. Pipes larger than 4-inch nominal size may be served by a 4-inch cleanout;

b. A 1 1/4-inch "P" trap connected with slip joints or ground joint connections may be used to serve 1 1/2- inch pipe; and,

c. A 1 1/2-inch "P" trap connected with slip joints or ground joint connections may be used to serve a 2-inch pipe.

B. Pipes 8 Inches and Larger Nominal Size. For pipes 8 inches and larger nominal size, cleanouts shall comply with the following.

1. Building drains may be served with a 4-inch cleanout.

2. For building sewers 8 inches and larger, manholes shall be provided and located at each change in direction and at intervals of not more than 400 ft (121.9 m). Manholes and manhole covers shall conform to §717.G.

3. Building drains 8-inch nominal size and larger shall have cleanouts located at intervals of not more than 100 ft (30.5 m) and at each change of direction over 45° (0.785 rad).

AUTHORITY NOTE: Promulgated in accordance with R.S. 40:4(A)(7) and R.S. 40:5(2)(3)(7)(9)(16)(17)(20).

HISTORICAL NOTE: Promulgated by the Department of Health and Hospitals, Office of Public Health, LR 38:

§721. Cleanout Clearances

A. Small Pipe. Cleanouts smaller than 3-inches shall be so installed that there is a clearance of not less than 12 inches (305 mm) for the purpose of rodding.

B. Large Pipe. Cleanouts on 3-inch or larger pipes shall be so located that there is a clearance of not less than 18 inches (457 mm) for the purpose of rodding.

AUTHORITY NOTE: Promulgated in accordance with R.S. 40:4(A)(7) and R.S. 40:5(2)(3)(7)(9)(16)(17)(20).

HISTORICAL NOTE: Promulgated by the Department of Health and Hospitals, Office of Public Health, LR 38:

§723. Fixture Units

A. Values for Fixtures. Fixture unit values as given in Table 723.A designate the relative load weight of different kinds of fixtures which shall be employed in estimating the total load carried by a soil or waste pipe and shall be used in connection with the tables of sizes for soil, waste, and vent pipes for which the permissible load is given in terms of fixture units.

Table 723.A
Fixture Units Per Fixture or Group

Fixture Type	Private	Public	Assembly	Minimum Size of Trap (in)
Bathroom group consisting of a 1.6 GPF gravity tank, flushometer tank, or flushometer valve water closet, a small P.O. 1 1/4 lavatory, and a bathtub or shower or a combination bath/shower	6.0	7.0	9.0	
Bathroom group consisting of a 1.6 GPF gravity tank, flushometer tank, or flushometer valve water closet, a large P.O. 1 1/2 lavatory, and a bathtub or shower or a combination bath/shower	7.0	8.0	10.0	
Bathroom group consisting of a greater than 1.6 GPF gravity tank or flushometer valve water closet, a small P.O. 1 1/4 lavatory, and a bathtub or shower or a combination bath/shower	7.0	9.0	11.0	
Bathroom group consisting of a greater than 1.6 GPF gravity tank or flushometer valve water closet, a large P.O. 1 1/2 lavatory, and a bathtub or shower or a combination bath/shower	8.0	10.0	12.0	
Bathtub[1] (with or without overhead shower) or whirlpool attachments	2.0	2.0		2
Bidet	1.0			1 1/4
Bidet	2.0	2.0		1 1/2
Clothes Washer, domestic, standpipe	3.0	3.0	3.0	2
Clothes Washer, commercial, pumped waste[2]		Note 2	Note 2	
Clothes Washer, commercial, gravity waste[2]		Note 2	Note 2	
Combination sink and tray	3.0	3.0	3.0	1 1/2
Combination sink and tray with food disposal unit	4.0	4.0	4.0	Separate traps 1 1/2
Dental unit or cuspidor		1.0	1.0	1 1/4
Dental lavatory		1.0		1 1/4
Dishwashing machine[2], domestic.	2.0	2.0	2.0	1 1/2
Dishwashing machine[2], commercial		Note 2	Note 2	
Drinking Fountain	0.5	0.5	1.0	1 1/4
Floor drains[5]	1.0	2.0	2.0	2
Hub drains[6]	1.0	2.0	2.0	2
Kitchen sink, domestic	2.0	2.0		1 1/2
Kitchen sink, domestic with food waste grinder and/or dishwasher	3.0	3.0		1 1/2
Lavatory[4]	1.0	1.0	1.0	Small P.O. 1 1/4
Lavatory[4]	2.0	2.0	2.0	Large P.O. 1 1/2
Lavatory, barber, beauty parlor	2.0	2.0	2.0	1 1/2
Lavatory, surgeon's		2.0		1 1/2
Laundry tray (1 or 2 compartments)	2.0	2.0	2.0	1 1/2
Mobile/Manufactured Home, trailer trap	15.0			4
Shower stall, domestic	2.0	2.0	2.0	2
Showers (group) per head[2]		3.0	4.0	3
Sinks				

Table 723.A Fixture Units Per Fixture or Group				
Fixture Type	**Private**	**Public**	**Assembly**	**Minimum Size of Trap (in)**
Bar, private, above grade	1.0			1 1/2
Clinical, 1.6 GPF		6.0	6.0	3
Clinical, greater than 1.6 GPF		8.0	8.0	3
Curbed Cleaning Facility		3.0	3.0	3
Floor, food service		4.0	4.0	2
Floor, bar service		2.0	2.0	2
Floor, other uses[2]				
Pot, scullery, etc.[2]		4.0	4.0	1 1/2
Service (trap standard)		3.0	3.0	3
Service ("p" trap)		2.0	2.0	2
Surgeon's		3.0	3.0	1 1/2
Wash, (circular or multiple), normally used for hand washing, each set of faucets		2.0	3.0	Nominal 1 1/2
Wash, (circular or multiple), normally used for hand washing, no faucets (*e.g.*, Superdome hand wash sinks in public toilet rooms)		2.0	3.0	Nominal 1 1/2
Travel Trailer, trailer trap	6.0			4
Urinals				
Exposed trap	2.0	2.0	5.0	1 1/2
Pedestal, siphon jet, blowout, greater than 1.0 GPF	6.0	8.0	10.0	Note 7
Wall lip, integral trap, 1.0 GPF	2.0	2.0	5.0	Note 7
Wall lip, integral trap, greater than 1.0 GPF	2.0	2.0	6.0	Note 7
Washout, greater than 1.0 GPF	2.0	4.0	6.0	Note 7
Water Closets,				
1.6 GPF Gravity Tank	3.0	4.0	6.0	Note 7
1.6 GPF Flushometer Tank	3.0	4.0	6.0	Note 7
1.6 GPF Flushometer Valve	3.0	4.0	6.0	
greater than 1.6 GPF Gravity Tank	4.0	6.0	8.0	Note 7
greater than 1.6 GPF Flushometer Valve	4.0	6.0	8.0	Note 7
1 in = 25.4 mm				

NOTES:
1. A showerhead over a bathtub or whirlpool bathtub attachments does not increase the fixture value.
2. See §§723.B and 723.C for methods of computing unit value of fixtures not listed in Table 723.A or for rating of devices with intermittent flows.
3. See Table 723.B.
4. Lavatories with 1 1/4 or 1 1/2-inch trap have the same load value; larger punch out (P.O.) plugs for the drain hole have greater flow rate.
5. Size of floor drain trap shall be determined by the area of the floor to be drained; therefore, for larger trap sizes, see Table 723.B to determine the applicable fixture unit value. If the floor drain receives continuous or semi-continuous flows, utilize §723.C to determine the fixture unit value.
6. When the hub drain is utilized as a direct or an indirect waste receptor for a fixture, any fixture unit value otherwise assigned to the particular fixture draining into the hub drain shall be used. If the hub drain receives continuous or semi-continuous flows, utilize §723.C to determine the fixture unit value.
7. Trap size shall be consistent with fixture type as defined in industry standards.

B. Fixtures Not Listed. Fixtures not listed in Table 723.A shall be estimated in accordance with Table 723.B.

Table 723.B Fixtures Not Listed	
Fixture Drain or Trap Size (in)	**Fixture-Unit Value**
1 1/4 and smaller	1
1 1/2	2
2	3
3	5
4	6
1 in = 25.4 mm.	

C. Values for Continuous Flow. For a continuous or semi continuous flow into a drainage system, such as from a pump, pump ejector, air conditioning equipment, or similar device, 2 fixture units shall be allowed for each gallon per minute (gpm) of flow (31.7 fixture units for each liter per second of flow).

D. Air Conditioning Units. The condensate or waste from an air conditioning unit shall be classified as a plumbing fixture only if connected to the plumbing system.

AUTHORITY NOTE: Promulgated in accordance with R.S. 40:4(A)(7) and R.S. 40:5(2)(3)(7)(9)(16)(17)(20).

HISTORICAL NOTE: Promulgated by the Department of Health and Hospitals, Office of Public Health, LR 38:

§725. Drainage System Sizing

A. Maximum Fixture Unit Load. The maximum number of fixture units that may be connected to a given size of building sewer, building drain, or horizontal branch of the building drain shall be determined using Table 725.A.1. The maximum number of fixture units that may be connected to a given size vertical soil or waste stack, or a horizontal branch connecting to a vertical soil or waste stack, is given in Table 725.A.2.

Table 725.A.1
Building Drains and Sewers

Maximum Number of Fixture-Units that may be Connected to Any Portion [1] of the Building Drain or the Building Sewer [2]				
Diameter of Pipe (in.)	Fall in Inches Per Foot			
	1/16	1/8	1/4	1/2
2	-	-	21	26
3	-	20[3]	27[3]	36[3]
4	-	180	216	250
5	-	390	480	575
6	-	700	840	1,000
8	1,400	1,600	1,920	2,300
10	2,500	2,900	3,500	4,200
12	3,900	4,600	5,600	6,700
15	7,000	8,300	10,000	2,000
1 in = 25.4 mm.				

NOTES:
1. Includes branches of the building drain. The minimum size of any building drain serving a water closet shall be 3".
2. No building sewer shall be less than 4 inches in size.
3. Not over two water closets.

Table 725.A.2
Horizontal Fixture Branches and Stacks

	Maximum Number of Fixture Units that May be Connected to:			
			More Than 3 Stories in Height	
Diameter of Pipe[5] (in.)	Any Horizontal Fixture Branch[1,4]	One Stack of 3 Stories or 3 Intervals Maximum	Total for Stack	Total at One Story or Branch Interval
1 1/4	1	2	2	1
1 1/2	3	4	8	2
2	6	10	24	6
3	20[2]	30[3]	60[3]	16[2]
4	160	240	500	90
5	360	540	1100	200
6	620	960	1900	350
8	1400	2200	3600	600
10	2500	3800	5600	1000
12	3900	6000	8400	1500
15	7000	---	---	---
1 in = 25.4 mm				

NOTES:
1. Does not include branches of the building drain.
2. Not over two water closets.
3. Not over six water closets.
4. 50 percent less for battery vented fixture branches, no size reduction permitted for battery vented branches throughout the entire branch length.
5. The minimum size of any branch or stack serving a water closet shall be 3".

B. Minimum Size of Soil and Waste Stacks. No soil or waste stack shall be smaller than the largest horizontal branch connected thereto except that a 4x3 water closet connection shall not be considered as a reduction in pipe size. The soil or waste stack shall run undiminished in size from its connection to the building drain to its connection to the stack vent.

C. Future Fixtures. When provision is made for the future installation of fixtures, those provided for shall be considered in determining the required sizes of drain pipes. Construction to provide for such future installation shall be terminated with a plugged fitting or fittings at the stack so as to form no dead end.

D. Underground Drainage Piping. Any portion of the drainage system installed underground or below a basement or cellar shall not be less than 2-inch diameter. In addition, any portion of the drainage system installed underground which is located upstream from a grease trap or grease interceptor as well as the underground horizontal branch receiving the discharge there from shall not be less than 3-inch diameter.

AUTHORITY NOTE: Promulgated in accordance with R.S. 40:4(A)(7) and R.S. 40:5(2)(3)(7)(9)(16)(17)(20).

HISTORICAL NOTE: Promulgated by the Department of Health and Hospitals, Office of Public Health, LR 38:

§727. Offsets in Drainage Piping in Buildings of Five Stories or More

A. Offsets of 45 Degrees or Less. An offset in a vertical stack, with a change of direction of 45° (0.785 rad) or less from the vertical, may be sized as a straight vertical stack. In case a horizontal branch connects to the stack within 2 ft (610 mm) above or below the offset, a relief vent shall be installed in accordance with §931.C, except that when the offset stack is sized for a building drain (see Table 725.A.1, Column 5) the relief vent may be omitted.

B. Above Highest Branch. An offset above the highest horizontal branch is an offset in the stack vent and shall be considered only as it affects the developed length of the vent.

C. Below Lowest Branch. In the case of an offset in a soil or waste stack below the lowest horizontal branch, no change in diameter of the stack because of the offset shall be required if it is made at an angle of not greater than 45° (0.785 rad) from the vertical. If such an offset is made at an angle greater than 45° (0.785 rad) from the vertical, the required diameter of the offset and the stack below it shall be determined as for a building drain (Table 725.A.1).

D. Offsets of More Than 45 Degrees. A stack with an offset of more than 45° (0.785 rad) from the vertical shall be sized as follows:

1. The portion of the stack above the offset shall be sized as for a regular stack based on the total number of fixture units above the offset;

2. The offset shall be sized as for a building drain (Table 725.A.1, Column 5);

3. The portion of the stack below the offset shall be sized as for the offset or based on the total number of fixture units on the entire stack, whichever is larger (See Table 725.A.2, Column 4); and,

4. A relief vent for the offset shall be installed as provided in Chapter 9 and in no case shall a horizontal branch connect within the offset or within 2 feet (610 mm) above or below the offset.

E. Omission of Offset Reliefs. Offset relief vents required by §727.D may be omitted by sizing the stack and its offset one pipe size larger than required for a building drain (see Table 725.A.1, Column 5) but in no case shall the entire stack and offset be of less cross-sectional area than that required for a straight stack plus the area of an offset relief vent as provided in §931.B. Omission of relief vents in accordance with this Subsection shall not constitute approval of horizontal branch connections within the offset or within 2 feet (610 mm) above or below the offset. See §727.A for offsets of 45° (0.785 rad) or less.

AUTHORITY NOTE: Promulgated in accordance with R.S. 40:4(A)(7) and R.S. 40:5(2)(3)(7)(9)(16)(17)(20).

HISTORICAL NOTE: Promulgated by the Department of Health and Hospitals, Office of Public Health, LR 38:

§729. Waste Stacks Serving Kitchen Sinks

A. In a one or two family dwelling only in which the waste stack or vent receives the discharge of a kitchen sink and also serves as a vent for fixtures connected to the horizontal portion of the branch served by the waste stack, the minimum size of the waste stack up to the highest sink branch connection shall be 2-inch diameter. Above that point the size of the stack shall be governed by the total number of fixture units vented by the stack.

1. Note: The requirement/allowance under §729.A is only applicable if the requirement of §905.C.1 has been satisfied elsewhere on the building drain. When the requirement of §905.C.1 has not been satisfied elsewhere on the building drain, then the entire waste stack and vent mentioned in §729.A shall be sized to conform to §905.C.1.

AUTHORITY NOTE: Promulgated in accordance with R.S. 40:4(A)(7) and R.S. 40:5(2)(3)(7)(9)(16)(17)(20).

HISTORICAL NOTE: Promulgated by the Department of Health and Hospitals, Office of Public Health, LR 38:

§731. Sumps and Ejectors

A. Building Drains below Sewer. Building drains which cannot be discharged to the sewer by gravity flow shall be discharged into a tightly covered and vented sump from which the liquid shall be lifted and discharged into the building gravity drainage system by automatic pumping equipment or by any equally efficient method approved by the plumbing official.

B. Check and Gate Valve Required. A check valve and a gate valve shall be installed in the pump or ejector discharge piping between the pump or ejector and the gravity drainage system. Such valve shall be accessibly located above the sump cover required by §731.A, or when the discharge pipe from the ejector is below $grade_{(G)}$, the valves may be accessibly located outside the sump below $grade_{(G)}$ in an access pit with removable access cover.

C. Sewage Ejector Sump Construction. Sumps may be constructed of cast iron or monolithically poured reinforced concrete. When concrete sumps are used, a cover attachment ring shall be embedded in the concrete in such a way as to be watertight and gastight. The attachment ring shall be designed to fit the sump cover and allow a gastight and watertight seal to be made. Other engineered sump construction and materials may be accepted by the plumbing official when designed to be watertight and gastight and otherwise meet the requirements of this Section.

D. Venting. The system of drainage piping below the sewer level shall be installed and vented in a manner similar to that of the gravity system.

E. Duplex Equipment. Sumps receiving the discharge of more than six water closets shall be provided with duplex pumping equipment.

F. Vent Sizes. Building sump vents shall be sized in accordance with Table 937.B but shall in no case be sized less than 1 1/2 inches.

G. Separate Vents. Vents from pneumatic ejectors or similar equipment shall be carried separately to the open air as a vent terminal (see §927.A).

H. Connections. Direct connection of a steam exhaust, blowoff, or drip pipe shall not be made with the building drainage system. Waste water when discharged into the building drainage system shall be at a temperature not higher than 140°F (60°C). When higher temperatures exist, proper cooling methods shall be provided.

I. Pumping Station. Pumping stations shall comply with the following.

1. A pumping system shall include the sump pump, sump pit and discharge piping as specified below:

a. Sump Pump. An automatic water pump for the removal of drainage from a sump, pit or low point in a residential, commercial or industrial property. Capacity and head shall be appropriate to anticipated use requirements.

b. Sump Pit. The sump pit shall be not less than 18 inches (457 mm) diameter and 24 inches (610 mm) deep, unless approved by the plumbing official. The pit shall be accessible and located such that all drainage flows into the pit due to gravity. The sump pit may be constructed of tile, concrete, steel, plastic or other approved materials. The pit bottom shall be solid and provide permanent support for the pump. The sump pit shall be fitted with a removable cover adequate to support anticipated loads in the area of use and to prevent refuse from entering the pit.

c. Discharge piping. Discharge piping shall meet the requirements of §731.B.

2. Electrical service outlet when required shall meet the requirements of the NFPA 70 or local codes.

3. Sumps which receive and discharge liquid wastes or raw sewage from plumbing fixtures shall meet the applicable requirements of §731.C.

J. Maximum Effluent Level. The effluent level control, etc., shall be adjusted and maintained to at all times prevent the effluent in the sump from rising to within 2 inches (51 mm) of the invert of the gravity drain inlet into the sump.

K. Ejector Connection to the Drainage System. Pumps when connected to the drainage system shall connect to the building sewer or shall connect to a wye fitting in the building drain a minimum of 10 ft (3048 mm) from the base of any soil stack, waste stack or fixture drain.

L. Macerating Systems. Macerating toilet systems shall comply with ASME A 112.3.4 and shall be installed per the manufacturer's instructions. The outlet piping from the

grinder pump shall not be less than 3/4-inch and shall be fitted with a check valve and a full-flow gate or ball valve.

AUTHORITY NOTE: Promulgated in accordance with R.S. 40:4(A)(7) and R.S. 40:5(2)(3)(7)(9)(16)(17)(20).

HISTORICAL NOTE: Promulgated by the Department of Health and Hospitals, Office of Public Health, LR 38:

§733. Repairs to Drainage System via Re-route

A. In the case where it is determined that there is a broken underground drain line including, but not limited to, broken drain lines under the slab of a building, and a drain line re-route is performed, the existing broken underground drain line shall be cut or otherwise disconnected from the entire drainage system. At the point of such cutting or disconnection, the entire circumference of the existing pipe which remains connected to the drainage system shall have a wall thickness of not less than 1/8-inch. The existing pipe which remains connected to the drainage system shall be sealed watertight and gastight using approved plumbing materials and joining/jointing methods, *e.g.*, properly install an approved cap, plug, or cleanout on the cut or disconnected pipe.

AUTHORITY NOTE: Promulgated in accordance with R.S. 40:4(A)(7) and R.S. 40:5(2)(3)(7)(9)(16)(17)(20).

HISTORICAL NOTE: Promulgated by the Department of Health and Hospitals, Office of Public Health, LR 38:

§735. Additional Provisions for Sanitary Drainage

A. Additional provisions for sanitary drainage are found in the following:

1. §705.H - Installation of Building Sewers;
2. Chapter 13 - Medical Facilities Plumbing Systems;
3. Chapter 15 - Travel Trailers and Travel Trailer Parks;
4. Chapter 16 - Mobile/Manufactured Homes and Mobile/Manufactured Home Parks; and,
5. Chapter 17 - Sewerage System Regulations.

AUTHORITY NOTE: Promulgated in accordance with R.S. 40:4(A)(7) and R.S. 40:5(2)(3)(7)(9)(16)(17)(20).

HISTORICAL NOTE: Promulgated by the Department of Health and Hospitals, Office of Public Health, LR 38:

Chapter 8. Indirect and Special Wastes

§801. General

A. Scope. The provisions of this Chapter shall govern the materials, design, construction, and installation of indirect and special wastes systems.

B. Tests. The indirect and special waste system shall be tested in accordance with §319.

AUTHORITY NOTE: Promulgated in accordance with R.S. 40:4(A)(7) and R.S. 40:5(2)(3)(7)(9)(16)(17)(20).

HISTORICAL NOTE: Promulgated by the Department of Health and Hospitals, Office of Public Health, LR 38:

§803. Material and Size

A. The material and size of indirect waste piping shall be in accordance with the provisions applicable to sanitary drainage piping in Chapter 7. Acid and chemical indirect waste pipes shall be of materials unaffected by the discharge of such wastes.

AUTHORITY NOTE: Promulgated in accordance with R.S. 40:4(A)(7) and R.S. 40:5(2)(3)(7)(9)(16)(17)(20).

HISTORICAL NOTE: Promulgated by the Department of Health and Hospitals, Office of Public Health, LR 38:

§805. Indirect Waste Methods

A. Air gap (drainage system). The air gap (drainage system) between the indirect waste and the building drainage system shall be at least twice the diameter of the effective opening of the indirect waste pipe, but in no case less than 2 inches (51 mm), and shall be provided by extending the indirect waste pipe to an open, accessible floor sink, service sink, floor drain, hub drain or other suitable fixture which is properly trapped and vented. The indirect waste pipe shall terminate a sufficient distance above the flood-level rim of the sink or receptor to provide the minimum required air gap and shall be installed in accordance with other applicable Sections of this Part.

B. Air break (drainage system). The air break (drainage system) between the indirect waste and the building drainage system shall be installed such that the level of the lowest outlet located on the fixture, device, appliance or apparatus (to which the indirect waste pipe connects) is above the flood-level rim of the receiving sink or other receptor by a vertical distance of at least twice the diameter of the effective opening of the indirect waste pipe, but in no case less than 2 inches (51 mm). In addition, the indirect waste pipe shall terminate below the flood-level rim of the receiving sink or other receptor a distance equal to not more than one-half (1/2) the diameter of the effective opening of the indirect waste pipe.

AUTHORITY NOTE: Promulgated in accordance with R.S. 40:4(A)(7) and R.S. 40:5(2)(3)(7)(9)(16)(17)(20).

HISTORICAL NOTE: Promulgated by the Department of Health and Hospitals, Office of Public Health, LR 38:

§807. Indirect Waste Connections

A. Food Handling. Establishments engaged in the storage, preparation, selling, serving, processing or other handling of food shall have the waste piping from all food handling equipment indirectly connected to the drainage system through an air gap (drainage system) or air break (drainage system) as specified in §805. Food handling equipment includes but is not limited to the following: any sink where food is cleaned, peeled, cut up, rinsed, battered, defrosted or otherwise prepared or handled; potato peelers; ice cream dipper wells; refrigerators; freezers; walk-in coolers or freezers; ice boxes; ice making machines; fountain type drink dispensers; rinse sinks; cooling or refrigerating coils; laundry washers; extractors; steam tables; steam kettles; egg boilers; coffee urns; or similar equipment.

1. Exception. An air gap (drainage system) is the only acceptable method of indirectly connecting any food handling equipment wherein the indirect waste pipe may be under a vacuum.

B. Commercial Dishwashing Machines. Commercial dishwashing machines shall be indirectly connected.

C. Connections. The following types of connections shall be indirect waste connections in accord with the specifications stated below.

1. Water Supply Connections. Drains, overflows or relief lines from the water distribution system shall waste into an indirect waste receptor through an air gap (water distribution).

2. Air Conditioning Unit Connections. Indirect waste connections shall be provided for drains, overflows, or relief lines from air conditioning units.

D. Sterile Materials. Appliances, devices, or apparatus such as stills, sterilizers, and similar equipment, requiring water and waste connections and used for sterile material, shall be indirectly connected or provided with an air gap (drainage system) between the trap and the appliance.

E. Drips. Appliances, devices, or apparatus not regularly classed as plumbing fixtures but which have drips or drainage outlets shall be drained by indirect waste pipes discharging into an open receptacle as provided in §805.

F. Cleanliness. The sink or receptor receiving indirect wastes shall be water-supplied if the waste stream contains or is expected to contain a sufficient amount of organic matter capable of causing odors or otherwise causing a nuisance due to an insufficient dilution of the waste material discharged into the sink or receptor.

G. Receptors. Waste/plumbing receptors serving indirect waste pipe discharges shall meet the following requirements.

1. Installation. Waste receptors serving indirect waste pipes shall not be installed in any toilet room, nor in any inaccessible or unventilated space such as a closet or storeroom.

2. Strainers and Baskets. Every indirect waste receptor receiving discharge containing particles that would clog the receptor shall be equipped with a basket or other device which shall prevent passage into the drainage system of solids 1/2-inch (12.7 mm) or larger in size. The basket or device shall be removable for cleaning purposes.

3. Splashing. All plumbing receptors receiving the discharge of indirect waste pipes shall be of such shape and capacity as to prevent splashing or flooding. No plumbing fixture which is used for domestic or culinary purposes shall be used to receive the discharge of an indirect waste pipe.

H. Clear Water Wastes. Water lifts, expansion tanks, cooling jackets, sprinkler systems, drip or overflow pans or similar devices which waste clear water only, shall discharge into the building drainage system through an indirect waste.

I. Hot Water Drainage. A steam pipe shall not connect directly to any part of a drainage system, nor shall any water above 140ºF (60ºC) be discharged directly into any part of a drainage system.

J. Drinking Fountains. Drinking fountains may be installed with indirect wastes.

K. Swimming Pools. Piping carrying waste water from swimming or wading pools, including pool drainage, backwash from filters, water from scum gutter drains or floor drains which serve walks around pools, shall be installed as an indirect waste utilizing a circulation pump, if necessary, when indirect waste line is below the sewer grade$_{(S)}$.

L. Residential Washing Machines (clothes washers). All residential washing machines shall connect to the building drainage system via an individual indirect waste pipe for each machine using one of the indirect waste methods specified in §805.

1. Any machines which discharge by gravity shall discharge into an adequately sized individual receptor, such as a floor sink. Such receptor/floor sink shall be properly trapped, vented, and directly connected to the drainage system.

M. Commercial Laundry Machines. All commercial laundry washing machines shall connect to the building drainage system via an individual indirect waste pipe for each machine using one of the indirect waste methods specified in §805.

1. Any machines which discharge by gravity shall individually discharge into an adequately sized receptor trough/pit or adequately sized individual receptors, such as floor sinks. Such receptor trough/pit or floor sinks shall be properly trapped, vented, and directly connected to the drainage system.

AUTHORITY NOTE: Promulgated in accordance with R.S. 40:4(A)(7) and R.S. 40:5(2)(3)(7)(9)(16)(17)(20).

HISTORICAL NOTE: Promulgated by the Department of Health and Hospitals, Office of Public Health, LR 38:

§809. Limitations

A. The following limitations/requirements shall apply to indirect waste pipes.

1. Indirect waste piping exceeding 2 ft (610 mm) long shall be trapped.

2. The maximum length of the indirect waste to indirect waste receptor shall not exceed 15-feet (4527 mm). Should an indirect waste pipe exceed 15 feet in length, a local vent shall be provided at a maximum of every 15 feet in length.

B. Cleaning. Indirect waste piping shall be so installed as to permit ready access for flushing and cleansing.

AUTHORITY NOTE: Promulgated in accordance with R.S. 40:4(A)(7) and R.S. 40:5(2)(3)(7)(9)(16)(17)(20).

HISTORICAL NOTE: Promulgated by the Department of Health and Hospitals, Office of Public Health, LR 38:

§811. Additional Provisions for Indirect and Special Wastes

A. Additional provisions for indirect and special wastes are found in the following:

1. Chapter 13 - Medical Facilities Plumbing Systems;

2. Chapter 15 - Travel Trailers and Travel Trailer Parks;

3. Chapter 16 -Mobile/Manufactured Homes and Mobile/Manufactured Home Parks; and,

4. Chapter 17 – Sewerage System Regulations;

AUTHORITY NOTE: Promulgated in accordance with R.S. 40:4(A)(7) and R.S. 40:5(2)(3)(7)(9)(16)(17)(20).

HISTORICAL NOTE: Promulgated by the Department of Health and Hospitals, Office of Public Health, LR 38:

Chapter 9. Vents

§901. General

A. Scope. The provisions of this Chapter shall govern the materials, design, construction, and installation of vents.

B. Protection of Trap Seals. The protection of trap seals from siphonage or back pressure shall be accomplished by the appropriate use of soil or waste stacks, vents, revents, back vents, loop vents, circuit or continuous vents or combination thereof, installed in accordance with the requirements of this Chapter and the limitations set forth in §303.H.2.

C. Tests. The venting system shall be tested in accordance with §319.B.

D. Engineered Systems. Engineered sanitary drainage and venting systems shall conform to the provisions of Chapter 12, Alternate Designed Plumbing Systems.

AUTHORITY NOTE: Promulgated in accordance with R.S. 40:4(A)(7) and R.S. 40:5(2)(3)(7)(9)(16)(17)(20).

HISTORICAL NOTE: Promulgated by the Department of Health and Hospitals, Office of Public Health, LR 38:

§903. Materials

A. Vents. Pipe, tubing, and fittings for the vent piping system shall comply with the provisions of Chapter 7.

B. Specific Type. Standards given in Table 703 apply to the specific materials approved for use and as indicated in the various Sections in this Chapter.

C. Piping above Ground. Vent piping shall be of cast iron, galvanized steel, brass or copper pipe, copper tube of a weight not less than that of copper drainage tube Type DWV, and Schedule 40 plastic piping. Vent piping used in acid waste systems shall be of the same material used in the acid soil and waste piping (see §703.F).

D. Piping Underground. Vent piping placed underground shall be of cast iron, copper tube of a weight not less than that of Type DWV, Schedule 40 plastic piping or heavy schedule borosilicate glass, provided that other materials may be used for underground vents when found adequate and installed as directed by the plumbing official. Vent piping used in acid waste systems shall be of the same material used in the acid soil and waste piping (see §703.F). Materials subject to corrosion shall be protected when installed in corrosive soil.

E. Fittings. Fittings shall be compatible to the type of pipe used in the vent system as required by §§903.B, 903.C and 903.D.

1. Vent pipes installed less than 6 inches above the flood-level rim of fixture(s) served shall be installed with approved drainage fittings (i.e., short turn quarter bends shall be prohibited).

AUTHORITY NOTE: Promulgated in accordance with R.S. 40:4(A)(7) and R.S. 40:5(2)(3)(7)(9)(16)(17)(20).

HISTORICAL NOTE: Promulgated by the Department of Health and Hospitals, Office of Public Health, LR 38:

§905. Vent Stacks

A. Installation. A vent stack or main vent shall be installed with a soil or waste stack whenever back vents, relief vents or other branch vents are required in two or more branch intervals. No fixture shall be permitted to drain into any stack above any vent connection.

B. Terminal. The vent stack shall terminate independently above the roof of the building or shall be connected with the extension of the soil or waste stack (stack-vent) at least 6 inches (152 mm) above the flood-level rim of the highest fixture.

C. Main Stack. The main vent stack or stack vent shall comply with the following.

1. Every building in which plumbing is installed shall have at least one main vent stack or stack vent, of not less than 3-inch (76 mm) diameter, for each building drain, when connected separately to a building sewer, septic tank, or other sewage collection and/or disposal system approved by the state health officer. Such vent shall run undiminished in size and as directly as possible from the building drain through to the open air above the roof.

2. The main vent stack in a detached garage or other accessory building where only a washing machine or laundry tray is installed may be 1 1/2 inches (38 mm).

AUTHORITY NOTE: Promulgated in accordance with R.S. 40:4(A)(7) and R.S. 40:5(2)(3)(7)(9)(16)(17)(20).

HISTORICAL NOTE: Promulgated by the Department of Health and Hospitals, Office of Public Health, LR 38:

§907. Vent Terminals

A. Roof Extension. Extensions of vent pipes through a roof shall be terminated at least 6 inches (152 mm) above the roof, except that where a roof is to be used for any purpose other than weather protection, the vent extension shall be run at least 9 feet (2743 mm) above the roof or any structure where people may congregate.

B. Frost Closure. Where there is possibility of frost closure, the vent extension through a roof shall be at least 3-inch diameter. When it is found necessary to increase the size of the vent terminal, the change in diameter shall be made at least 1 foot (305 mm) inside the building.

C. Flashings. The juncture of each vent pipe with the roof line shall be made watertight by proper flashing (see §§303.G.1.b and 303.G.2.b).

D. Flag Poling. Vent terminals shall not be used to support flag poles, TV aerials, or similar items, except when the piping has been anchored to the construction and approved as safe by the plumbing official.

E. Location of Vent Terminal. A vent terminal from a drainage system shall not be located directly beneath any door, window or other fresh air intake opening of the building or of an adjacent building, nor shall any such vent terminal be within 10 feet (3048 mm) horizontally of such an opening unless it is at least 2 feet (610 mm) above the top of such opening.

F. Extensions through Wall. Vent terminals extending through a wall shall terminate at least 6 inches (152 mm) above the roof and the opening shall face upward. Vent terminals shall not terminate under the overhang of the building.

G. Air Admittance Valves for Venting Plumbing Fixtures and Fixture Branches. Air admittance valves are not approved for venting of plumbing fixture traps.

AUTHORITY NOTE: Promulgated in accordance with R.S. 40:4(A)(7) and R.S. 40:5(2)(3)(7)(9)(16)(17)(20).

HISTORICAL NOTE: Promulgated by the Department of Health and Hospitals, Office of Public Health, LR 38:

§909. Vent Grades$_{(S)}$ and Connections

A. Grade$_{(S)}$. All vent and branch vent pipes shall be so graded and connected as to drip back to the soil or waste pipe by gravity.

B. Vertical Rise. The vertical rise of vent pipes shall conform with the following.

1. Vertical Rise of Vent for a Horizontal Soil or Waste Pipe. Where vent pipes (including wet vent pipes) connect to a horizontal soil or waste pipe, the vent shall be taken off above the center line of the soil pipe, and the vent pipe shall rise vertically, or at an angle not exceeding 45° (0.785 rad) from the vertical, before offsetting horizontally.

2. Vertical Rise of Vent for a Vertical Soil or Waste Pipe. Where vent pipes connect at or below the lowest fixture connection, to a vertical soil or waste pipe, such vent shall be taken off at an angle not exceeding 45° (0.785 rad) to the vertical to a point at least 6 inches (152 mm) above the flood-level rim of the lowest fixture it is venting before offsetting horizontally.

C. Height Above Fixtures. A connection between a vent pipe and a vent stack or stack vent shall be made at least 6 inches (152 mm) above the flood-level rim of the highest fixture served by the vent. Horizontal vent pipes forming branch vents, relief vents, or loop vents shall be at least 6 inches (152 mm) above the flood-level rim of the highest fixture served.

AUTHORITY NOTE: Promulgated in accordance with R.S. 40:4(A)(7) and R.S. 40:5(2)(3)(7)(9)(16)(17)(20).

HISTORICAL NOTE: Promulgated by the Department of Health and Hospitals, Office of Public Health, LR 38:

§911. Bar and Fountain Sink Traps

A. Traps serving sinks which are part of the equipment of island bars, island soda fountains, island counters and similar equipment need not be conventionally vented when the location and construction of such bars, soda fountains and counters make it impossible to do so. When these conditions exist, traps which are roughed in above the floor shall be vented by extending the vent as high as possible, but not less than the drainboard height and then returning it downward and connecting it to the horizontal sink drain immediately downstream from the vertical fixture drain. The return vent shall be connected to the horizontal branch through a wye-branch fitting and shall, in addition, be provided with a foot vent taken off the vertical fixture vent by means of a wye-branch immediately below the floor and extending to the nearest partition and then through the roof to the open air or may be connected to other vents at a point not less than 6 inches (152 mm) above the flood-level rim of the fixtures served. Vent pipes installed less than 6 inches above the flood-level rim of the sink shall be installed with approved drainage fittings in accordance with §903.E.1 and a minimum slope of 1/4 inch per foot back to the drain shall be maintained. The return bend used under the drainboard shall be a 45-degree, a 90-degree and a 45-degree elbow in the order named. Pipe sizing shall be as elsewhere in this Part. The island sink drain, upstream of the returned vent, shall serve no other fixtures. An accessible cleanout shall be installed on the vertical vent pipe under the drainboard and another cleanout should be installed in the vertical portion of the foot vent. (The cleanout recommended on the vertical portion of the foot vent shall be located at least 6 inches above the flood level rim of the sink but not more than 4 feet above the finish floor. Preferably, the vertical portion of the foot vent and its recommended cleanout shall be located on an outside wall with the cleanout accessible outside or, if this is not possible, behind a refrigerator, for example, such that the cleanout access is not aesthetically objectionable to the occupants.) For food service establishments, drainage shall be in accordance with §807.A (see Figure 911.A).

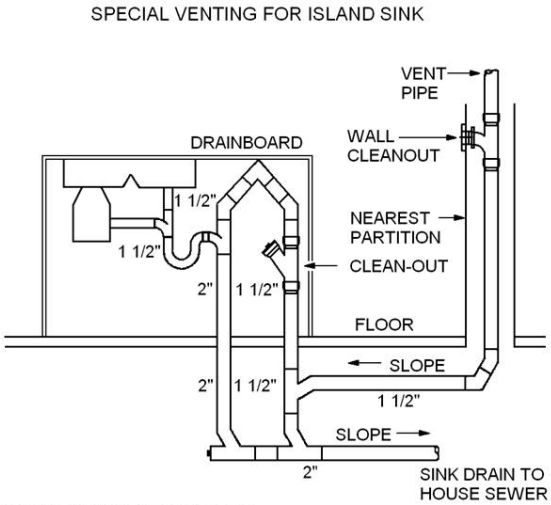

Figure 911.A—Special Venting for Island Sink

AUTHORITY NOTE: Promulgated in accordance with R.S. 40:4(A)(7) and R.S. 40:5(2)(3)(7)(9)(16)(17)(20).

HISTORICAL NOTE: Promulgated by the Department of Health and Hospitals, Office of Public Health, LR 38:

§913. Fixture Vents

A. Distance of Trap from Vent. Each fixture trap shall have a protecting vent so located that the slope and the developed length (see Figures 913.A and 913.C) in the fixture drain from the trap weir to the vent fitting are within the requirements set forth in Table 913.A, except as permitted by §923.A. For water closets or other floor or wall mounted fixtures having an integral trap, the developed length shall be the distance from the internal vent opening to the face of the flange to which the fixture is bolted or otherwise fastened.

Table 913.A
Distance of Fixture Trap from Vent

Size of Fixture Drain (in)	Size of Trap (in)	Fall (in/ft)	Max. Distance From Trap
1 1/4	1 1/4	1/4	3 ft 6 in
1 1/2	1 1/4	1/4	5ft
1 1/2	1 1/2	1/4	5ft
2	1 1/2	1/4	6ft
2	2	1/4	6ft
3	3	1/8	10ft
4	4	1/8	12ft
1in = 25.4 mm 1ft = 0.3048 m			

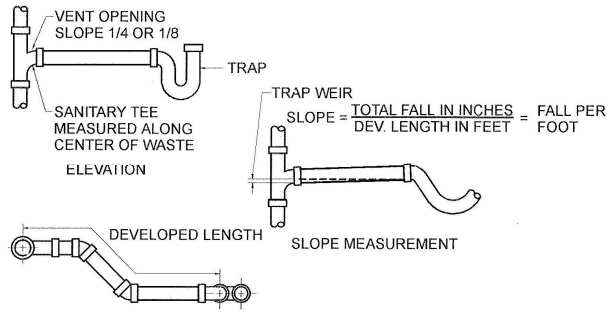

Figure 913.A—Distance of Fixture Trap from Vent

B. Trap Seal Protection. The plumbing system shall be provided with a system of vent piping which will permit the admission or emission of air so that under normal and intended use the seal of any fixture trap shall not be subjected to a pressure differential of more than 1-inch of water (249 Pa).

C. Location of Vent Opening. The internal vent pipe opening from a soil or waste pipe, except for water closets and similar fixtures, shall not be below the top weir of the trap's outlet.

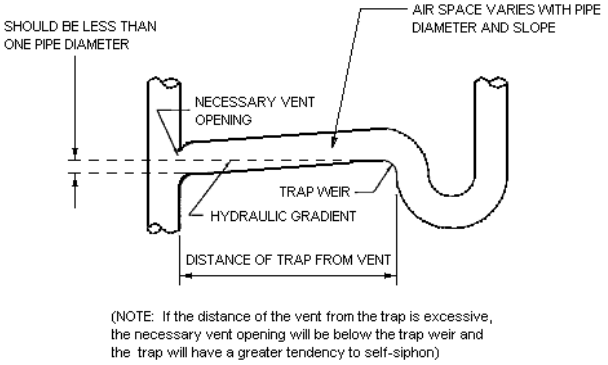

Figure 913.C—Location of Vent Opening

D. Crown Vent. A vent shall not be installed within 2 pipe diameters of the trap weir (see §1001.E.4).

AUTHORITY NOTE: Promulgated in accordance with R.S. 40:4(A)(7) and R.S. 40:5(2)(3)(7)(9)(16)(17)(20).

HISTORICAL NOTE: Promulgated by the Department of Health and Hospitals, Office of Public Health, LR 38:

§915. Common Vent

A. Individual Vent. An individual vent, installed vertically, may be used as a common vent for two fixture traps when both fixture drains connect with a vertical drain at the same level. Also, see §311.C as regards double sanitary tee pattern limitations on fixtures or appliances with a pumping action discharge.

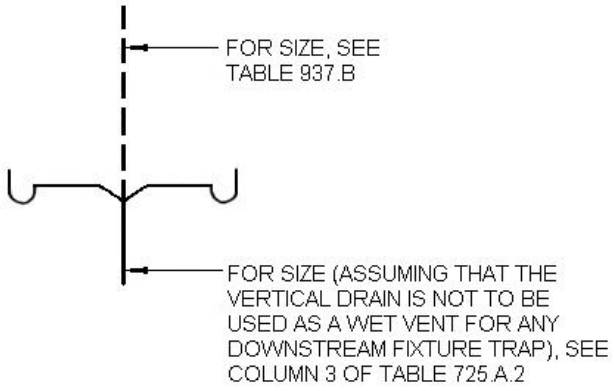

Figure 915.A—Common Vent
(Fixtures Connecting at Same Level)

B. Fixtures on Same Floor Connecting at Different Levels in the Stack. A common vent may be used for two fixtures set on the same floor level but connecting at different levels in the stack, provided the vertical drain is one pipe size larger than the upper fixture drain but in no case smaller than the lower fixture drain, whichever is the larger, and that both drains conform to Table 913.A. A minor fixture, such as a lavatory, shall enter the common vent above a major fixture, such as a water closet [i.e., a minor (having less fixture units) over/upstream of a major (having more fixture units) rule]. See Figures 915.A and 915.B and §915.D.

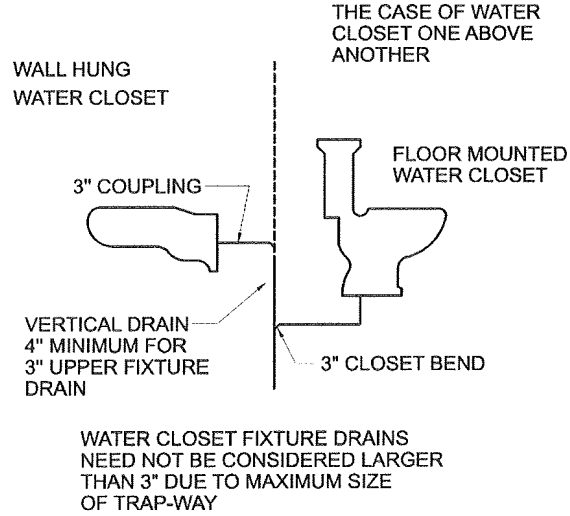

Figure 915.B (1 of 2)—Common Vent
(Fixtures Connecting at Different Levels)

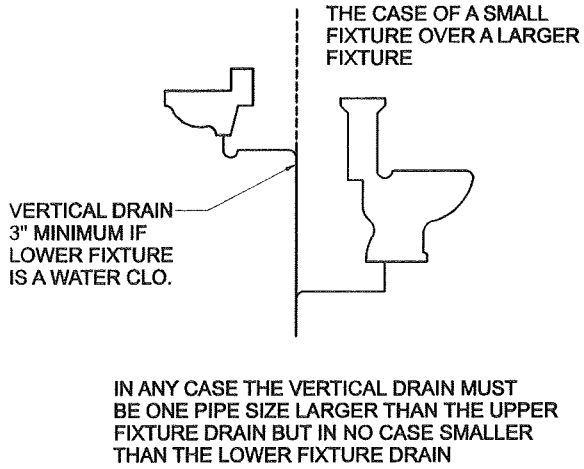

Figure 915.B (2 of 2)—Common Vent
(Fixtures Connecting at Different Levels)

C. Distance. The maximum distance allowed between back-to-back or side-by-side fixture traps and their vent, when vented by a "common vent", shall be in accord with the requirements of §913.A. In addition, the following shall apply.

1. Two fixtures set back-to-back, or side-by-side connected to a common horizontal branch within the distance allowed between a trap and its vent may be served with one continuous soil or waste vent-pipe, provided that each fixture wastes separately into an approved double fitting having inlet openings at the same level. The vent shall be installed in a vertical position at the interconnection of the fixture drains or downstream of the interconnection in accordance with the distance of trap from vent requirements in Table 913.A. See left-hand depiction of Figure 915.C.

2. When not more than two fixtures are set back-to-back or side-by-side, within the distance allowed between a trap and its vent, they may be connected to a common

horizontal branch served by a common vertical vent located between the two fixtures, provided the branch is one pipe size larger than either of the fixture drains, except as permitted by §923.A. This vent shall not serve as a waste for any other fixture. A minor fixture, such as a floor drain, shall enter the common horizontal branch served by a common vertical vent upstream of a major fixture, such as a water closet [i.e., a minor (having less fixture units) over/upstream of a major (having more fixture units) rule]. See right-hand depiction of Figure 915.C.

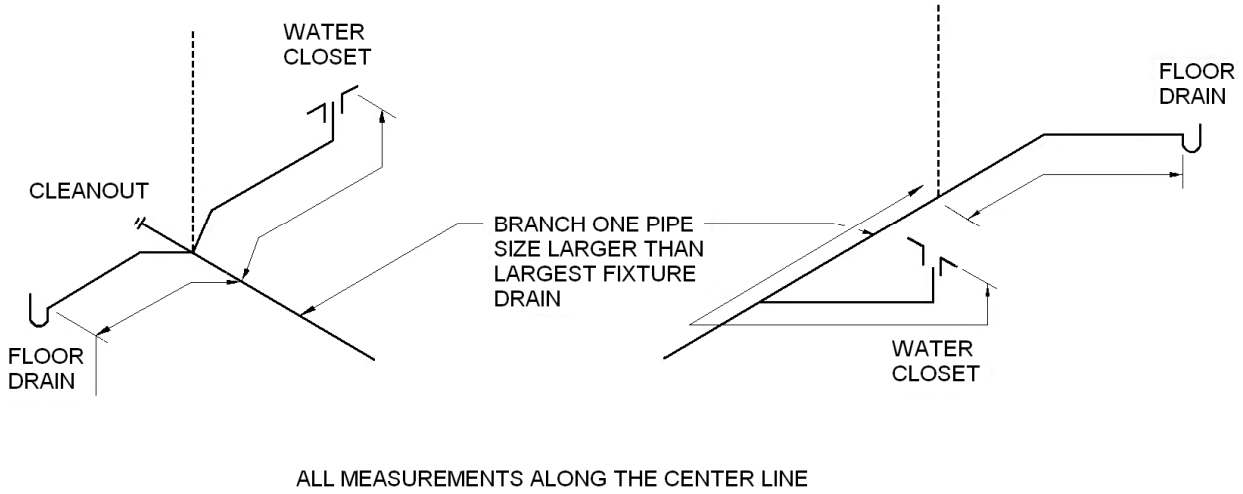

Figure 915.C—Common Vent
(Distance between Trap and Vent)

D. For the purpose of this Section, 3-inch (76 mm) or 4-inch (102 mm) floor or shower drains, up to and including 4-discharge fixture unit (dfu) water closets or pedestal urinals shall be considered as having 3-inch (76 mm) drains. For more than two fixtures on a common horizontal branch, see §925.A (Battery Venting).

1. Certain water closets and other plumbing fixtures (such as clinical sinks, flushing rim service sinks, etc.), in either public use or assembly use, have ratings exceeding 4 dfu. In such case, the horizontal branch serving such water closets or other plumbing fixtures shall be a minimum of 5-inch (127 mm) in diameter when a common vertical vent is used, as provided in §915.C.2.

AUTHORITY NOTE: Promulgated in accordance with R.S. 40:4(A)(7) and R.S. 40:5(2)(3)(7)(9)(16)(17)(20).

HISTORICAL NOTE: Promulgated by the Department of Health and Hospitals, Office of Public Health, LR 38:

§917. Vents for Fixture Trap below Trap Weir/Fixtures Entering at Different Levels

A. Hydraulic Gradient. Fixture drains shall be vented within the hydraulic gradient between the top weir of the trap's outlet and the internal opening of the vent connection, but in no case shall the unvented drain exceed the distance provided for in Table 913.A. See §913.C.

B. Different Levels. If any single branch interval has fixtures entering the stack at different vertical levels, the fixtures other than the fixture entering at the highest level shall be individually vented, except as may be otherwise permitted in other Sections of this Chapter. See §§915.B, 921.A, 923.C, and 925.C.

AUTHORITY NOTE: Promulgated in accordance with R.S. 40:4(A)(7) and R.S. 40:5(2)(3)(7)(9)(16)(17)(20).

HISTORICAL NOTE: Promulgated by the Department of Health and Hospitals, Office of Public Health, LR 38:

§919. Wet Venting

A. Single Bathroom Groups. A single bathroom group of fixtures may be installed with the drain from a back vented lavatory serving as a wet vent for a bathtub or shower stall and for the water closet, provided that the wet vent is one pipe size larger than the upper fixture drain but in no case smaller than the lower fixture drain, whichever is the larger, and that both fixture drains conform to Table 913.A. No urinal exceeding 2.0 dfu or washing machine drain shall discharge into any wet vent. A minor fixture, such as a bathtub or shower, shall enter the wet vent/drain pipe upstream of a major fixture, such as a water closet [*i.e.*, a minor (having less fixture units) over/upstream of a major (having more fixture units) rule]. The dry vent servicing the wet vent shall be sized based upon the developed length and the total fixture units connected thereto in accord with §937.B and Table 937.B. (Note: Per the definition of "wet vent", the wet vent terminates at the connection with the water closet's fixture drain. If the water closet is being vented by a method other than the wet vent, the wet vent terminates where it connects to the stack, the lowest or most downstream fixture drain, or where it connects to a separate horizontal branch line or the building drain, as appropriate.)

B. Double Bath. Bathroom groups back-to-back on the top floor consisting of two bathtubs or shower stalls may be installed on the same horizontal branch with a common vent

for the lavatories with no back vent for the water closets, bathtubs or shower stalls, provided that the wet vent is one pipe size larger than the upper fixture drain but in no case smaller than the lower fixture drain, whichever is the larger, and that both fixture drains conform to Table 913.A. No urinal exceeding 2.0 dfu or washing machine drain shall discharge into any wet vent. A minor fixture, such as a bathtub or shower, shall enter the wet vent/drain pipe upstream of a major fixture, such as a water closet [*i.e.*, a minor (having less fixture units) over/upstream of a major (having more fixture units) rule]. The dry vent servicing the wet vent shall be sized based upon the developed length and the total fixture units connected thereto in accord with §937.B and Table 937.B. (Note: Per the definition of "wet vent", the wet vent terminates at the connection with the water closet's fixture drain. If the water closet is being vented by a method other than the wet vent, the wet vent terminates where it connects to the stack, the lowest or most downstream fixture drain, or where it connects to a separate horizontal branch line or the building drain, as appropriate.)

C. Multistory Bathroom Groups. On the lower floors of a multistory building, the waste pipe from one or two lavatories may be used as a wet vent for one or two bathtubs or showers provided that:

1. the wet vent and its extension to the vent stack is not less than 2-inch (51 mm) diameter;
2. each water closet below the top floor is individually back vented;
3. the vent stack is sized in accordance with Table 919.C; and,
4. the lowest wet vent shall be sized for the total bathtubs or showers connected to the stack but in no case shall the wet or dry portion of the lowest vent be less than required for the vent stack itself.

Table 919.C Size of Vent Stack	
Number of Wet Vented Fixtures	**Diameter of Vent Stacks (In.)**
1 or 2 bathtubs or showers	2
3 to 5 bathtubs or showers	2 ½
6 to 9 bathtubs or showers	3
10 to 16 bathtubs or showers	4
1 in = 25.4 mm	

AUTHORITY NOTE: Promulgated in accordance with R.S. 40:4(A)(7) and R.S. 40:5(2)(3)(7)(9)(16)(17)(20).

HISTORICAL NOTE: Promulgated by the Department of Health and Hospitals, Office of Public Health, LR 38:

§921. Stack Venting

A. Fixture Groups. A single bathroom group of fixtures, consisting of a water closet, lavatory, shower or tub, and a kitchen sink (with disposal and dishwasher) located back-to-back to the bathroom, or two bathrooms back-to-back each consisting of one toilet, lavatory, shower or tub may be installed without individual fixture vents in a one story building or on the top floor of a building provided each fixture drain connects independently to the stack and that the tub and/or shower and water closet enter the stack at the same level and in accordance with the requirements in Table 913.A. The wet vent portion of the stack vent shall be one pipe size larger than the upper fixture drain but in no case smaller than the lower fixture drain, whichever is the larger.

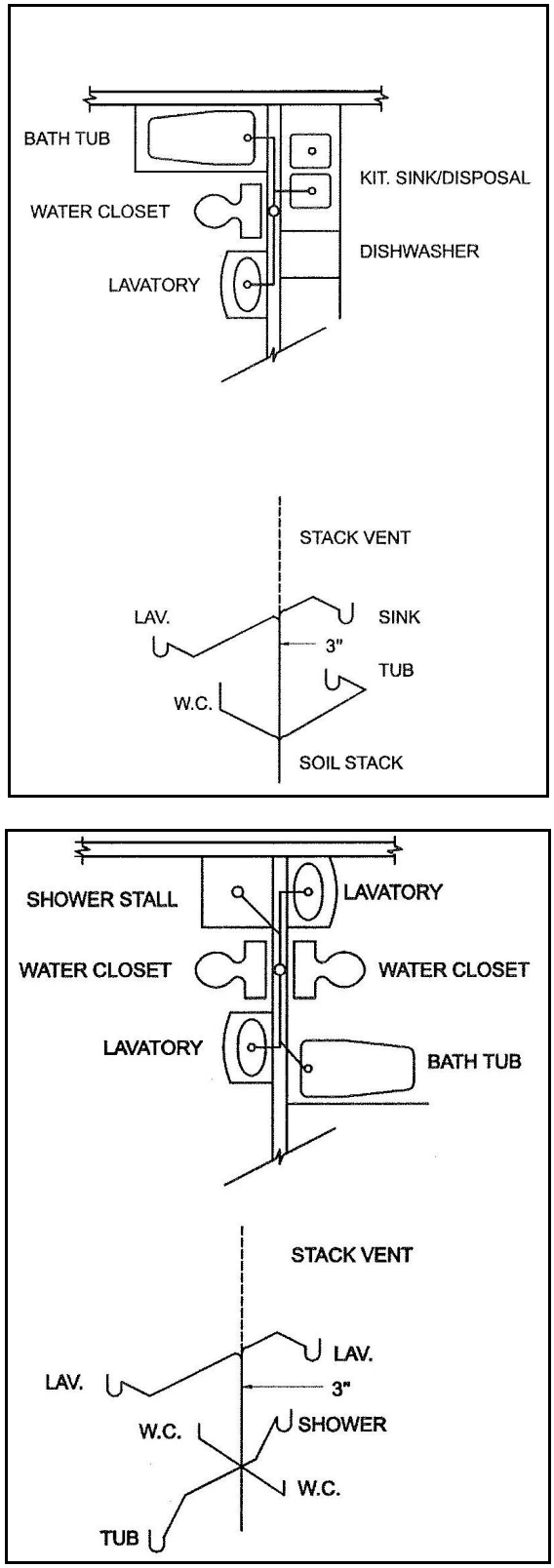

Figure 921.A—Stack Venting

B. Lower Floors. The lower floors of multistoried buildings may also be vented as in §921.A provided that a separate wye and upright one-eighth bend is installed in the stack and that the stack group is installed above the one-eighth bend and that at least a 2-inch (51 mm) diameter vent is installed 6 inches (152 mm) above the flood level of the highest fixture in the stack group. See figure 921.B.

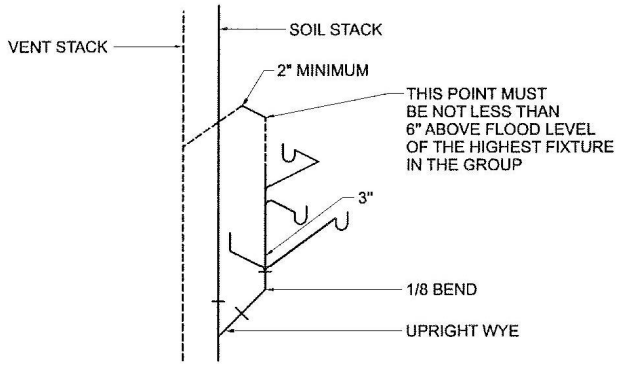

Figure 921.B—Stack Venting Lower Floors

AUTHORITY NOTE: Promulgated in accordance with R.S. 40:4(A)(7) and R.S. 40:5(2)(3)(7)(9)(16)(17)(20).

HISTORICAL NOTE: Promulgated by the Department of Health and Hospitals, Office of Public Health, LR 38:

§923. Individual Fixture Reventing

A. Horizontal Branches. A horizontal waste branch meeting the following criteria shall effectively provide an exception to the need for a revent pipe(s).

1. Provided:

a. the horizontal branch is full size throughout its length;

b. each fixture drain enters the horizontal branch via a wye and 1/8th bend or a combination wye and 1/8th bend;

c. the wastes are connected with a pitch of not more than 1/4 inch per foot (21 mm per meter);

d. that a 2-inch "P" trap shall be the minimum for tubs and showers;

e. the waste openings in the horizontal branch shall not be less than 1 1/4 inches for lavatories and 1 1/2 inches for a sink; and,

f. that one drinking fountain shall be considered as one lavatory; then, without the use of reventing:

i. one sink and one lavatory, or one tub, or one shower, or three lavatories within 8 feet (2438 mm) developed length of a main vented line may be installed on a 2-inch horizontal waste branch; or,

ii.two lavatories within 5 feet (1524 mm) developed length of a main vented line may be installed on a 1 1/2-inch horizontal waste branch.

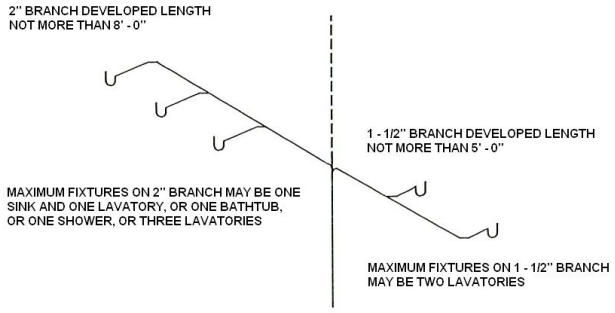

Figure 923.A

B. Where Required. All fixtures discharging downstream from a water closet shall be individually vented.

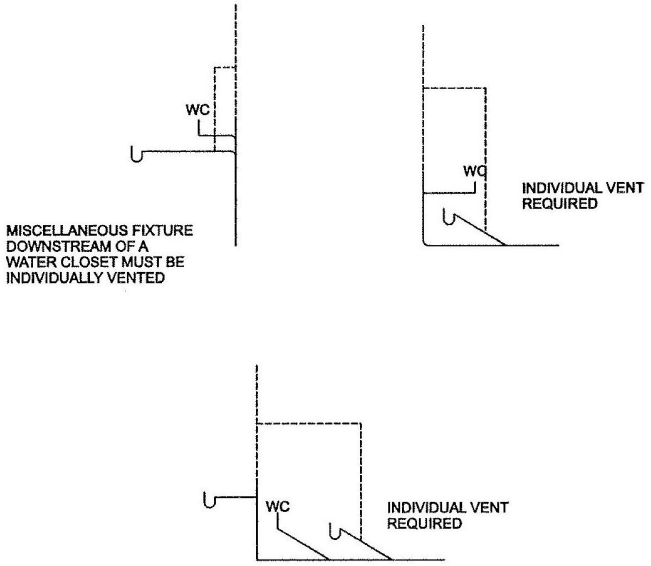

Figure 923.B—Required Individual Vents

C. Limits of Fixture Units Above Bathtubs and Water Closets. Up to a total of three fixture units may be placed on a soil or waste stack on floors above the highest water closet or bathtub connection without the use of a revent pipe(s) provided:

1. the soil or waste stack is not less than 3-inch diameter;

2. the total fixture unit load on the stack does not exceed the limitations of Table 725.A.2;

3. the largest fixture drain opening into the stack does not exceed the nominal diameter of the trap of the fixture to be connected except as permitted in §923.A. Such opening for multiple fixture connections shall be limited to use on one floor only;

4. each fixture above the highest tub or water closet is no farther from the stack than permitted in Table 913.A; and,

5. all fixtures on lower floors are vented as otherwise required by this Chapter.

AUTHORITY NOTE: Promulgated in accordance with R.S. 40:4(A)(7) and R.S. 40:5(2)(3)(7)(9)(16)(17)(20).

HISTORICAL NOTE: Promulgated by the Department of Health and Hospitals, Office of Public Health, LR 38:

§925. Battery Venting

A. A branch soil or waste pipe of uniform diameter throughout its length, to which are connected in battery a maximum of eight floor-level fixtures [floor outlet water closets, back outlet water closets (provided they connect horizontally into the battery vented section), floor drains, bathtubs, and showers] and which do not exceed 50 percent of the fixture units allowed by column two of Table 725.A.2, may be vented by a circuit or loop vent system connected downstream of the most upstream fixture drain (between the two uppermost fixture drains). In addition, battery vented branches on the top floor of a building and serving three or more fixtures shall be provided with a relief vent connected

immediately downstream of the first downstream fixture connection of the battery vented section. When a battery vented branch is installed below the uppermost floor of the building, regardless of the number of fixtures served, it shall be provided with a relief vent connected immediately downstream of the first downstream fixture connection of the battery vented section. When lavatories or similar fixtures having a fixture unit rating of four or less and a maximum 2-inch fixture drain discharge from above such branches, each vertical branch shall be provided with a continuous vent. Such fixtures shall be located on the same floor as the battery vented group and the waste from such fixtures is required to enter the battery vented section from the horizontal. Fixtures having fixture unit ratings greater than four shall not discharge into such branch from above unless all fixtures in the battery group are individually vented. Fixtures from an upper floor or from an adjoining or other room(s) or space(s) (other than back-to-back installations, for example, back-to-back to bathrooms) shall not discharge into a battery vented branch. Floor level fixtures, including but not limited to floor drains, discharging downstream from a water closet shall be individually vented (see §925.C.5). Each fixture drain/trap which is connected to a battery vented soil or waste pipe branch shall conform with the distance of trap from vent requirements in Table 913.A. The developed length distance from the weir of the trap or the flange of the water closet to the battery vented soil or waste pipe branch shall be used to determine compliance with Table 913.A.

1. Exception. The relief vent, connected immediately downstream of the first downstream fixture connection of the battery vented section, may be omitted on a top floor installation of a battery vented section provided a stack vent or vent stack is located downstream of the first downstream horizontal fixture connection.

B. Vent Connections. Any vent or vents on the battery vented section shall be taken off from the vertical or at an angle not exceeding 45 degrees from the vertical in conformity with §909.B.1.

1. In addition, if a fixture having a fixture unit rating of four or less and a maximum 2-inch fixture drain discharge wastes into either the upper vent or the downstream relief vent of a battery vented section, the wet portion of such vent shall not be smaller than the horizontal battery branch.

a. Exception. The vent branch connection may be taken off horizontally provided it is washed by not more than four fixture units, other than water closets, and the wet portion of the vent is not smaller than the horizontal battery branch.

C. Fixtures Back-to-Back in Battery (see Figure 925.C). Fixtures installed back-to-back in a battery vented system shall comply with the following.

1. A fixture connected to a horizontal branch through a vertical drain and a sanitary tee shall be vented in accordance with §913.A.

2. Back-to-back fixtures connected to a horizontal branch through a single vertical drain shall enter the vertical drain through a sanitary cross, and a common vent for each two fixtures shall be provided. The common vent shall be installed as a continuation of the vertical drain.

3. A fixture connected to a horizontal branch through a wye or combination wye and one-eighth bend installed in a horizontal position need not be individually vented.

4. Back-to-back fixtures connected to a horizontal branch through a double wye or combination double wye and one-eighth bend installed in the horizontal position need not be provided with a common vent at the connection to the horizontal branch, except for the last two fixtures upstream. The vent shall be installed in a vertical position at the interconnection of the fixture drains or downstream of the interconnection in accordance with the distance of fixture trap from vent requirements in Table 913.A.

5. In spite of §§925.C.3 and 925.C.4, the following floor level fixtures discharging downstream from a water closet shall be individually vented:

a. floor drains;

b. bathtubs;

c. showers;

d. floor sinks;

e. curbed cleaning facilities (i.e., floor-level mop sinks); and,

f. similar type fixtures.

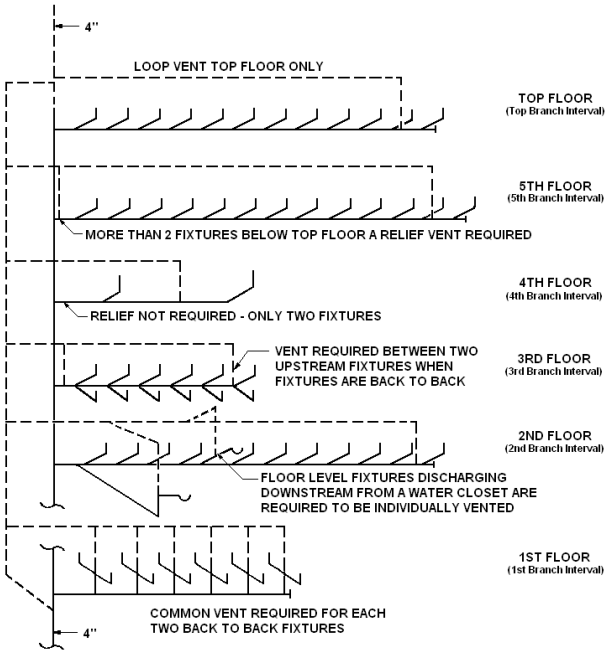

Figure 925.C—Battery Venting

AUTHORITY NOTE: Promulgated in accordance with R.S. 40:4(A)(7) and R.S. 40:5(2)(3)(7)(9)(16)(17)(20).

HISTORICAL NOTE: Promulgated by the Department of Health and Hospitals, Office of Public Health, LR 38:

§927. Pneumatic Ejectors

A. Relief vents from a pneumatic ejector shall be carried separately to the open air.

AUTHORITY NOTE: Promulgated in accordance with R.S. 40:4(A)(7) and R.S. 40:5(2)(3)(7)(9)(16)(17)(20).

HISTORICAL NOTE: Promulgated by the Department of Health and Hospitals, Office of Public Health, LR 38:

§929. Yoke Vents—Stacks of More Than 10 Branch Intervals

A. Soil and waste stacks in buildings having more than 10 branch intervals shall be provided with a yoke vent at each tenth interval installed, beginning with the top floor. The size of the yoke vent shall be equal to the size of the vent stack to which it connects. The lower end of each yoke vent shall connect to the soil or waste stack through a wye below the horizontal branch serving the floor, and the upper end shall connect to the vent stack through a wye not less than 3 feet (914 mm) above the floor and not less than 6 inches above the flood-level rim of the highest fixture served on the floor.

AUTHORITY NOTE: Promulgated in accordance with R.S. 40:4(A)(7) and R.S. 40:5(2)(3)(7)(9)(16)(17)(20).

HISTORICAL NOTE: Promulgated by the Department of Health and Hospitals, Office of Public Health, LR 38:

§931. Offset Vents

A. General. In buildings five or more stories in height, offsets in vertical drainage piping having less than a 45° (0.785 rad) slope shall be vented in accordance with §931.B or §931.C, except as otherwise permitted by §727.

B. Separate Venting. Such offsets may be vented as two separate soil or waste stacks, namely the stack section below the offset and the stack section above the offset.

C. Offset Reliefs. Such offsets may be vented by installing a relief vent as a vertical continuation of the lower section of the stack or as a side vent connected to the lower section between the offset and next lower fixture or horizontal branch. The upper section of the offset shall be provided with a yoke vent. The diameter of the vents shall be not less than the diameter of the main vent, or of the soil and waste stack, whichever is the smaller.

AUTHORITY NOTE: Promulgated in accordance with R.S. 40:4(A)(7) and R.S. 40:5(2)(3)(7)(9)(16)(17)(20).

HISTORICAL NOTE: Promulgated by the Department of Health and Hospitals, Office of Public Health, LR 38:

§933. Main Vents to Connect at Base

A. All main vents or vent stacks shall connect full size at their base to the building drain within 10 pipe diameters of the main soil or waste pipe or to the main soil or waste pipe, at or below the lowest fixture branch. All vent pipes shall extend undiminished in size to the vent terminal, or shall be reconnected with the main soil or waste vent.

AUTHORITY NOTE: Promulgated in accordance with R.S. 40:4(A)(7) and R.S. 40:5(2)(3)(7)(9)(16)(17)(20).

HISTORICAL NOTE: Promulgated by the Department of Health and Hospitals, Office of Public Health, LR 38:

§935. Vent Headers

A. Stack vents and vent stacks may be connected into a common vent header at the top of the stacks and then terminate as required by this Chapter. This header shall be sized in accordance with the requirements of Table 937.B, the number of units being the sum of all units on all stacks connected thereto, and the developed length being the longest vent length from the intersection at the base of the most distant stack to the vent terminal as a direct extension of one stack.

AUTHORITY NOTE: Promulgated in accordance with R.S. 40:4(A)(7) and R.S. 40:5(2)(3)(7)(9)(16)(17)(20).

HISTORICAL NOTE: Promulgated by the Department of Health and Hospitals, Office of Public Health, LR 38:

§937. Size and Length of Vents

A. Length of Vent Stacks. The length of the vent stack or main vent shall be its developed length from the lowest connection of the vent system with the soil stack, waste stack, or building drain to the vent stack terminal, if it terminates separately, or to the connection of the vent stack with the stack vent, plus the developed length of the stack-vent from the connection to the terminal, if the two vents are connected together with a single extension.

B. Size of Stack-Vents, Vent Stacks, Relief Vents, Individual Vents or Branch Vents. The diameter of a stack-vent, vent stack, relief vent, individual vent or branch vent shall not be less than one-half of the diameter of the drain served, but in no case less than 1 1/4 inches, and shall be determined from its length and the total of fixture units connected thereto, as provided in Table 937.B. All water closets vents shall be a minimum of 2 inches in diameter. This shall not be interpreted to allow the alteration or elimination of the need for at least one 3-inch vent stack or stack vent on the building drain as required under §905.C.1.

C. Size of Battery Vents. The diameter of a battery vent shall be not less than one-half the pipe size of the horizontal waste line it is venting, but in no case less than 1 1/2 inches, and shall be determined from its length and the total of fixture units connected thereto, as provided in Table 937.C. The diameter and horizontal length of a battery vent shall in no case be less than permitted in Table 937.C. (See §925).

Table 937.B
Maximum Length of Vents (ft)
(Other than Battery Vents)
(See Table 937.C for Battery Venting)

Size of Soil or Waste Stack (in)	Fixture Units Connected	Diameter of Vent Required (in)								
		1 1/4	1 1/2	2	2 1/2	3	4	5	6	8
1 ¼	2	30 ft	-	-	-	-	-	-	-	-
1 ½	8	50 ft	150 ft	-	-	-	-	-	-	-
1 ½	10	30 ft	100 ft	-	-	-	-	-	-	-
2	12	30 ft	75 ft	200 ft	-	-	-	-	-	-
2	20	26 ft	50 ft	150 ft	-	-	-	-	-	-
2 ½	42	-	30 ft	100 ft	300 ft	-	-	-	-	-
3	10	-	30 ft	100 ft	200 ft	600 ft	-	-	-	-
3	30	-	-	60 ft	200 ft	500 ft	-	-	-	-
3	60	-	-	50 ft	80 ft	400 ft	-	-	-	-
4	100	-	-	35 ft	100 ft	260 ft	1000 ft	-	-	-
4	200	-	-	30 ft	90 ft	250 ft	900 ft	-	-	-
4	500	-	-	20 ft	70 ft	180 ft	700 ft	-	-	-

Table 937.B Maximum Length of Vents (ft) (Other than Battery Vents) (See Table 937.C for Battery Venting)										
Size of Soil or Waste Stack (in)	Fixture Units Connected	Diameter of Vent Required (in)								
		1 1/4	1 1/2	2	2 1/2	3	4	5	6	8
5	200	-	-	-	35 ft	80 ft	350 ft	1000 ft	-	-
5	500	-	-	-	30 ft	70 ft	300 ft	900 ft	-	-
5	1100	-	-	-	20 ft	50 ft	200 ft	700 ft	-	-
6	350	-	-	-	25 ft	50 ft	200 ft	400 ft	1300 ft	-
6	620	-	-	-	15 ft	30 ft	125 ft	300 ft	1100 ft	-
6	960	-	-	-	-	24 ft	100 ft	250 ft	1000 ft	-
6	1900	-	-	-	-	20 ft	70 ft	200 ft	700 ft	-
8	600	-	-	-	-	-	50 ft	150 ft	500 ft	1300 ft
8	1400	-	-	-	-	-	40 ft	100 ft	400 ft	1200 ft
8	2200	-	-	-	-	-	30 ft	80 ft	350 ft	1100 ft
8	3600	-	-	-	-	-	25 ft	60 ft	250 ft	800 ft
10	1000	-	-	-	-	-	-	75 ft	125 ft	1000 ft
10	2500	-	-	-	-	-	-	50 ft	100 ft	500 ft
10	3800	-	-	-	-	-	-	30 ft	80 ft	350 ft
10	5600	-	-	-	-	-	-	25 ft	60 ft	250 ft
1 in = 25.4 mm 1 ft = 0.3048 m										

Table 937.C Battery Vent Sizing Table Maximum Horizontal Length (ft)							
Soil or waste pipe diam. (in)	Maximum no. Fixture units	Diameter of circuit or loop vent (in)					
		1 1/2	2	2 1/2	3	4	5
2	3	15 ft	40 ft	-	-	-	-
2 $^1/_2$	6	10 ft	30 ft	-	-	-	-
3	10	-	20 ft	40 ft	100 ft	-	-
4	80	-	7 ft	20 ft	52 ft	200 ft	-
5	180	-	-	-	16 ft	70 ft	200 ft
1 in = 25.4 mm 1 ft = 0.3048 m							

AUTHORITY NOTE: Promulgated in accordance with R.S. 40:4(A)(7) and R.S. 40:5(2)(3)(7)(9)(16)(17)(20).

HISTORICAL NOTE: Promulgated by the Department of Health and Hospitals, Office of Public Health, LR 38:

§939. Additional Provisions

A. Additional provisions for vents are contained in Chapter 13- Medical Facilities Plumbing Systems.

AUTHORITY NOTE: Promulgated in accordance with R.S. 40:4(A)(7) and R.S. 40:5(2)(3)(7)(9)(16)(17)(20).

HISTORICAL NOTE: Promulgated by the Department of Health and Hospitals, Office of Public Health, LR 38:

§941. Additional Information

A. Additional information for vents is contained in Chapter 18 (Appendices), §1807-Appendix C-Illustrations. Such additional information in Chapter 18 shall not be construed as superceding any pertinent regulation(s) contained in Chapters 1-17.

AUTHORITY NOTE: Promulgated in accordance with R.S. 40:4(A)(7) and R.S. 40:5(2)(3)(7)(9)(16)(17)(20).

HISTORICAL NOTE: Promulgated by the Department of Health and Hospitals, Office of Public Health, LR 38:

Chapter 10. Traps

§1001. General

A. Scope. The provisions of this Chapter shall govern the materials and installation of traps.

B. Trap Seal. Each fixture trap shall have a water seal of not less than 2 inches (51 mm) and not more than 4 inches (102 mm), except where a deeper seal is required by the plumbing official for special conditions.

C. Trap Level and Protection. Traps shall be set level with respect to their water seals.

D. Traps Underground. Underground traps, except "P" traps into which floor drains with removable strainers discharge, shall be provided with accessible and removable cleanouts.

E. Prohibited Traps. The following traps (or types of traps) are prohibited from use:

1. a trap which depends for its seal upon the action of movable parts;
2. "S" traps;
   a. Exception. Water closets, clinical sinks, urinals and similar fixtures shall be allowed to be "S" trapped if the fixture has an integral trap which is automatically and properly refilled using an approved device.
3. bell traps;
4. crown-vented traps (see §913.D);
5. baffled or partition traps other than stainless steel, glass, plastic or similar corrosion resistant materials;
6. tubular metallic traps of less than 20 gage [0.0320 inch (0.813 mm)] thickness; and,
7. running traps.
   a. Exceptions

i.A running trap with cleanout may be allowed on condensate waste lines (see §1305.I).

ii. A running trap may be authorized for certain floor level fixtures installed on a Combination Waste and Vent System when plans and specifications have been specially approved by the state health officer under the requirements of Chapter 12 (Alternate Designed Plumbing Systems). See guidance for same under §1811.C.4.

F. Double Trapping. A fixture shall not be double trapped.

1. Exception. Fixtures in mobile/manufactured homes and travel trailers are allowed to be double trapped when a trailer trap is required to be placed in the building sewer/sewer lateral as per §1003.E, §1515.J, §1523.A, §1613.J or §1623.A.

G. Unions (Threaded). Unions may be used in the trap seal and on the inlet side of the trap. Unions shall have metal-to-metal seats.

H. Fixture Trap Required, Location, and Number of Traps Per Fixture. The requirement for a fixture trap and the number of traps per fixture shall be in conformance with the following.

1. Plumbing fixtures, excepting those having integral traps, shall be separately trapped by a water seal trap, placed as close to the fixture outlet as possible.

2. A combination plumbing fixture may be installed on one trap, if one compartment is not more than 6 inches (152 mm) deeper than the other and the waste outlets are not more than 30 inches (762 mm) apart.

3. One trap may be installed for a set of not more than three single-compartment sinks or laundry trays or three lavatories immediately adjacent to each other in the same room, if the waste outlets are not more than 30 inches (762 mm) apart and the trap is centrally located when three compartments are installed.

I. Distance of Trap Weir from Fixture Outlet. The vertical distance from the fixture outlet to the trap weir, or from the outlet of an integrally trapped water closet or similar fixture to the horizontal piping connecting the fixture to its vent, shall not exceed 24 inches (610 mm).

1. Exception. Washing Machine Pumped Waste Drain. The vertical distance from the vertical standpipe inlet receiving the pumped waste discharge from a washing machine (laundry) to the trap weir shall be a minimum of 30 inches (762 mm) and a maximum of 48 inches (1219 mm), with the vertical standpipe inlet terminating a minimum of 34 inches (864 mm) above finished floor or in accordance with the manufacturer's recommendation.

AUTHORITY NOTE: Promulgated in accordance with R.S. 40:4(A)(7) and R.S. 40:5(2)(3)(7)(9)(16)(17)(20).

HISTORICAL NOTE: Promulgated by the Department of Health and Hospitals, Office of Public Health, LR 38:

§1003. Type and Size of Traps and Fixture Drains

A. Trap Size. The size (nominal diameter) of a trap for a given fixture shall be sufficient to drain the fixture rapidly but in no case less than given in Table 723.A.

B. Relation to Fixture Drains. A trap shall not be larger than the fixture drain to which it is connected.

C. Type of Traps. Traps shall conform with the following requirements.

1. Fixture traps shall be self-cleaning, other than integral traps and drum traps, without partitions or movable parts, except as specifically approved in other Sections of this Chapter.

2. Slip joints may be used on both sides of the trap and in the trap seal.

3. A trap which is integral with the fixture shall have a uniform interior and a smooth waterway.

D. Drum Traps. The use of drum traps shall comply with the following requirements:

1. Drum traps shall be limited to special fixtures wherein the capture of solids (e.g., broken teeth, fillings, etc., from dental cuspidors) is desired so that such solids can be removed before they escape into the downstream drainage system. Drum traps are subject to approval by the plumbing official. The body of the drum trap shall be not less than 4-inch diameter and shall have a water seal of not less than 2 inches (51 mm).

2. The trap screw of the drum trap/drum trap cover shall be one size less than the body of the drum trap's diameter.

E. Trailer Traps. Mobile/manufactured homes and travel trailers shall be provided with a trailer trap in the building sewer/sewer lateral immediately downstream of the mobile/manufactured home or travel trailer drain outlet connection. The trailer trap shall be individually vented and the vent shall be located downstream of the trap at a distance in accord with Table 913.A, §913.D and §1001.E.4. Running traps are prohibited for this installation. See diagram under §1523.A or §1623.A.

1. Exception. The trailer trap for a mobile/manufactured home or travel trailer is not required to be provided with an individual vent if the mobile/manufactured home or travel trailer is connected to a park drainage system constructed in accord with §1613.G or §1515.G and the building sewer/sewer lateral is no longer than 30 feet (9144 mm) from the main park drainage sewer main. For this individual vent exception to apply, the building sewer/sewer lateral shall enter the main park drainage sewer main on the horizontal such that an "S" trap or an effective "S" trap is not created. See §§1515.J and 1613.E.1.

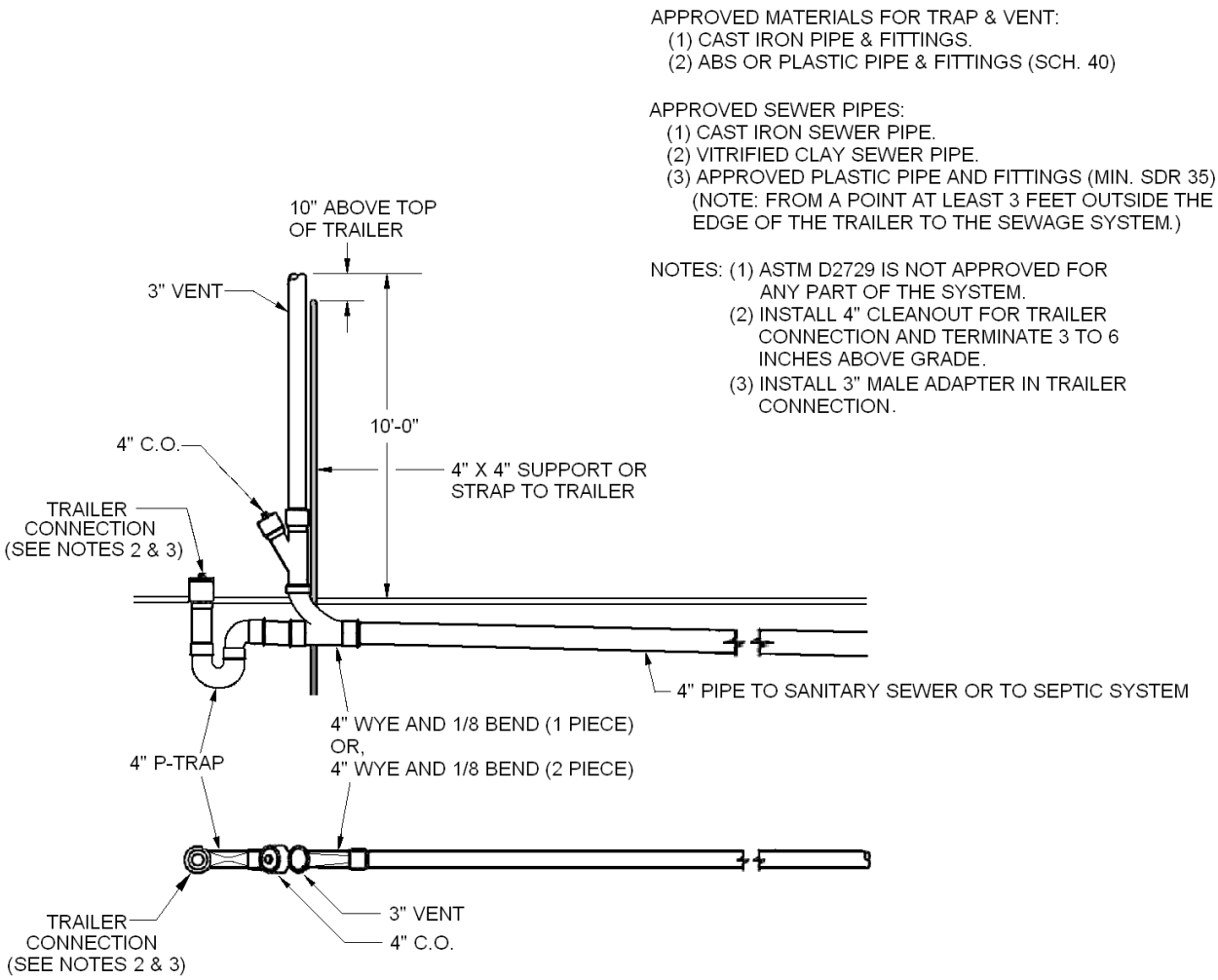

Figure 1003.E—Trailer Trap and Vent

AUTHORITY NOTE: Promulgated in accordance with R.S. 40:4(A)(7) and R.S. 40:5(2)(3)(7)(9)(16)(17)(20).

HISTORICAL NOTE: Promulgated by the Department of Health and Hospitals, Office of Public Health, LR 38:

§1005. Interceptors and Separators

A. When required. Interceptors or separators shall be provided for the proper handling of liquid wastes containing grease, oil, flammable waste, sand, solids or other ingredients harmful to the building drainage system, the sewerage system or sewage treatment plant or processes except when, in the opinion of the plumbing official, they are not necessary.

B. Size and Type. The size, type and location of each interceptor or separator shall be approved by the plumbing official.

C. Type of Waste. No wastes other than those requiring treatment or separation shall be discharged into any interceptor or separator except where otherwise specifically permitted.

D. Grease Traps, Grease Interceptors, and Large Capacity Grease Interceptors. An approved type grease trap, grease interceptor, or large capacity grease interceptor complying with the provisions of this Section shall be installed in the waste line leading from sinks, drains and other fixtures or equipment in establishments such as restaurants, cafes, lunch counters, cafeterias, bars and clubs, hotels, hospitals, sanitariums, factory, school or day care center kitchens, markets, or other establishments where grease may be introduced into the drainage or sewage system in quantities that can affect line stoppage or hinder sewage treatment or the functioning of an individual sewerage system, except when, in the opinion of the plumbing official, they are not necessary.

E. Oil Separators. An oil separator shall be installed in the drainage system section of the system where, in the opinion of the plumbing official, a hazard exists or where oils or other flammables can be introduced or admitted into the drainage system by accident or otherwise.

F. Sand Interceptors. Sand and similar interceptors for heavy solids shall have a water seal of not less than 2 inches (51 mm).

G. Venting Interceptors. Interceptors shall be so designed that they will not become air bound if closed covers are used. Each interceptor shall be properly vented.

H. Accessibility of Interceptors. Each interceptor shall be so installed as to provide ready accessibility to the cover and means for servicing and maintaining the interceptor in working and operating condition. The use of ladders or the

removal of bulky equipment in order to service interceptors shall constitute a violation of accessibility.

I. Water Connection. If permitted by the plumbing official, any water connection for cooling or operating an interceptor shall be such that backflow cannot occur.

J. Special Occupancy Provisions. Laundries, bottling plants and slaughter houses shall be provided with an interceptor or separator in conformance with the following.

1. Laundries. Laundries shall be provided with an interceptor as follows.

a. Interceptor. Commercial laundries shall be equipped with an interceptor having a removable wire basket or similar device that will prevent strings, rags, buttons, or other materials detrimental to the sewerage system from passing into the drainage system.

b. Intercepting Basket/Device. The basket or other device shall prevent passage into the drainage system of solids 1/2-inch (12.7 mm) or larger in size. The basket or device shall be removable for cleaning purposes.

2. Bottling Plants. Bottling plants shall discharge their process wastes into an interceptor which will provide for the separation of broken glass or other solids, before discharging liquid wastes into the drainage system.

3. Slaughter House Drains. Slaughtering room drains shall be equipped with separators which shall prevent the discharge into the drainage system of feathers, entrails and other materials likely to clog the drainage system.

K. Food Service. The following special requirements apply to the handling of organic wastes of food origin.

1. Commercial Food-Waste Grinders. Where commercial food-waste grinders are installed, the waste from those units shall discharge through a grease trap of an approved design for this use.

2. Wash Racks. Every wash rack and/or floor or slab used for cleaning containers and equipment exposed to organic wastes of food origin shall be adequately protected against storm or surface water and shall drain or discharge into a grease trap of an approved design for this use.

L. Maintenance. Grease traps, grease interceptors, large capacity grease interceptors, and other types of interceptors and separators shall be maintained in conformance with the following.

1. Grease Traps and Grease Interceptors. Grease traps, grease interceptors, and large capacity grease interceptors shall be maintained in efficient operating condition by periodic removal of the accumulated grease. No such collected grease shall be introduced into any drainage piping or sewerage system.

2. Interceptors and Separators in General. Interceptors and separators of all types shall be maintained in efficient operating condition by periodic removal of accumulated material for which the interceptor or separator has been designed. No such collected material shall be introduced into any drainage piping or sewerage system.

M. Special Type Interceptors/Separators. The plumbing official may require the submittal of drawings and other pertinent information for any interceptor/separator designed for a special or unusual purpose/use.

N. Procedures for Design, Construction and Installation of Interceptors and Separators [formerly Appendix M - Procedures for Design, Construction and Installation of Interceptors and Separators]. The provisions of this Subsection shall apply to the design, construction, installation and testing of interceptors and separators required in accordance with Subsections A - M of §1005.

1. Definitions. Definitions contained in Chapter 2 shall also apply to this Section except where the following special definitions shall apply.

Bottling Plant Separator—an *interceptor* designed to separate and retain broken glass and other solids.

Grease Interceptor—an *interceptor* of less than 125 gallon capacity which is designed and installed so as to separate and retain grease. Typically identified by flow rate and/or grease capacity and generally installed indoors adjacent to the plumbing fixtures they serve. (See §1005.N.6 for design and sizing requirements.)

Grease Trap—an *interceptor* of at least 125 gallon capacity which is designed and installed to separate and retain grease. Typically identified by liquid holding capacity (volume) and generally installed below $grade_{(G)}$ outdoors with provisions for above $grade_{(G)}$ accessibility for cleaning purposes. (See §1005.N.3 for sizing requirements and §1005.N.4 for design requirements.)

Large Capacity Grease Interceptor—an *interceptor* of at least 125 gallon capacity conforming to ASME A 112.14.3 or PDI-G101 which is designed and installed to separate and retain grease. Generally manufactured to be installed above or below $grade_{(G)}$ either indoors or outdoors. (See §1005.N.3 for sizing requirements and §1005.N.5 for design requirements.)

Laundry Trap—an *interceptor* designed to separate and retain lint, strings, rags, buttons or other similar materials which may be discharged from laundries.

Oil Separator—an *interceptor* designed to separate and retain waste oil and other petroleum products.

Sand Interceptor—an *interceptor* designed to separate and retain sand, gritty material or other types of heavy solids.

Slaughter House Separator—an *interceptor* designed to separate and retain feathers, entrails and other similar substances.

Special Type Separator—an *interceptor* designed to separate and retain deleterious, hazardous or undesirable matter from normal wastes for proper disposal, rendering, or recycling.

2. General Regulations. The following general regulations are applicable to interceptors and separators.

a. Size and Type. The size and type of each interceptor or separator shall be in accordance with the requirements of this Section and shall be approved by the plumbing official.

b. Location. The location of each interceptor or separator shall be approved by the plumbing official.

c. Prior Approval. No interceptor or separator shall be installed until its design, size, location and venting has been approved by the plumbing official.

d. Cleanout on Discharge Line. A two-way cleanout shall be provided on the discharge line immediately downstream of all interceptors.

e. Grease Traps/Grease Interceptors/Large Capacity Grease Interceptors. When it has been determined under §1005.D that a trap or interceptor is required, the following regulations apply to the use of a grease trap or large capacity

grease interceptor versus the allowance of the use of a grease interceptor.

i. A grease trap or large capacity grease interceptor shall be required in all instances of new construction or substantial renovation of buildings or facilities. In addition, a grease trap or large capacity grease interceptor shall be required for existing buildings or facilities when a proper installation can be performed without the need to break up a concrete slab.

ii. At the discretion of the plumbing official, a grease interceptor may be allowed in lieu of a grease trap or large capacity grease interceptor when the conditions for a grease trap/large capacity grease interceptor installation do not exist or cannot easily be met. For example, when:

(a). new construction, substantial renovation of buildings or facilities is not being performed and a concrete slab would have to be broken at the existing building or facility for the proper installation of a grease trap;

(b). an outside, unpaved area surrounding the building where a grease trap could be installed is available; however, it is determined that the area is too far away from the plumbing fixtures that the grease trap would be servicing; or,

(c). the installation of a grease trap is unfeasible such as when servicing a kitchen which is located on the upper floors of a multistoried building.

3. Minimum Capacity of Grease Traps and Large Capacity Grease Interceptors. The minimum required capacity of grease traps and large capacity grease interceptors shall be determined based upon the maximum number of persons served during the largest meal period in accordance with the following:

a. General. Grease traps and large capacity grease interceptors should be designed to be large enough to allow the water contained within it to remain cold since only cold water separates grease. In addition, grease traps and large capacity grease interceptors should be designed to be large enough so that they require cleaning at a frequency no more often than once per month.

b. Without Garbage Grinder. The minimum capacity for applications without a garbage grinder shall not be less than 125 gallons below the static water level. This capacity is sufficient to hold the flow from one meal long enough to accomplish proper grease separation when serving up to 50 people during a single meal period. When over 50 people are served during a single meal period, the minimum capacity of the grease trap or large capacity grease interceptor shall be increased beyond 125 gallons based upon at least an additional 2 1/2 gallons per person beginning with the 51[1st] person served and greater.

c. With Garbage Grinder. When a garbage grinder is connected (see §1005.K.1), the grease trap or large capacity grease interceptor shall have a minimum capacity of no less than 500 gallons below the static water level. This capacity is sufficient to hold the flow from one meal long enough to accomplish proper grease separation when serving up to 50 people during a single meal period. When a garbage grinder is connected and over 50 people are served during a single meal period, the minimum grease trap capacity shall be increased beyond 500 gallons based upon at least an additional 2 1/2 gallons per person beginning with the 51st person served and greater.

d. Alternate Sizing Methods. For informational purposes only, alternate sizing methods may be found in Figures 9, 10, and 11 of §1807, Appendix C.

4. Grease Traps. The following regulations are applicable to the design and installation of grease traps:

a. The minimum required capacity of grease traps shall be determined based upon the maximum number of persons served during the largest meal period in accordance with §1005.N.3.

b. If a grease trap must be installed within an enclosed building, any access covers shall be gasketed to prevent the intrusion of odors into the building.

c. A one compartment grease trap is acceptable; however, a two compartment, or a one compartment grease trap with a baffle wall between the inlet and outlet, is preferred.

d. The grease trap shall be placed as close to the plumbing fixture(s) discharging greasy waste as possible, but preferably on the outside of the building when feasible.

e. The minimum diameter of the outlet pipe shall not be less than 4 inches.

f. A minimum of one foot of air space shall be provided above the static water level.

g. Venting. The following regulations are applicable to the venting of grease traps:

i. The grease trap outlet shall be properly vented to prevent the trap from siphoning itself out. Any internally vented outlet line shall have the vent terminal extended to within 2 inches of the bottom of the access cover to prevent grease from escaping the grease trap through the open vent terminal.

ii. For those grease traps having a gasketed cover, the grease trap outlet line shall not be allowed to be internally vented. In this case, the outlet line itself shall have a 2-inch vent pipe properly installed.

h. The invert of the grease trap outlet opening, at the point where water exits the grease trap, shall be located at a maximum of 6 inches and a minimum of 4 inches from the floor of the grease trap. This requirement also applies to any intermediate outlets in multi-compartment grease traps. The invert of the inlet shall be at least 3 inches above the invert of the outlet.

i. On unbaffled single compartment grease traps, a 90° ell shall be used on the inlet and shall terminate 6 inches below the static water level. On baffled single compartment grease traps, a baffle wall shall be placed between the inlet and outlet. The inlet shall discharge into the grease trap at a level at least 6 inches below the top of the baffle wall. The baffle wall shall extend from 2 inches below the static water level to the bottom of the grease trap such that incoming water will have to overflow above the top of the baffle wall in order to reach the outlet.

j. The horizontal distance between the inlet and outlet piping in the grease trap should be sufficient to allow

gravity-differential separation to the grease so that it will not escape through the outlet. The minimum horizontal distance shall be 24 inches.

k. Access/Covers. The following regulations are applicable to the access to and the covers for grease traps:

i. Access from the top of the grease trap shall be provided by an easily removable cover above an access opening of at least 20 inches square or 24 inches round. Additional access opening/covers shall be provided as necessary to provide accessibility to each compartment in multi-compartment or multi-baffled arrangements as well as access to both the inlet and outlet. Access opening covers shall be above or at grade$_{(G)}$ to provide ready accessibility.

ii. Each access cover shall be designed so that it cannot slide, rotate, or flip when properly installed in order that the opening is not unintentionally exposed. (The intention is that a child-resistant cover be provided. Especially for lightweight covers, mechanical fasteners are recommended to augment the safety of and ensure positive closure of the cover.)

l. No water jacketed grease trap shall be approved or installed.

m. Each grease trap shall have an approved water seal of not less than 2 inches in depth or the diameter of its outlet, whichever is greater.

n. Abandoned grease traps shall be pumped and filled as required for abandoned septic tanks in accord with LAC 51:XIII.715.V.

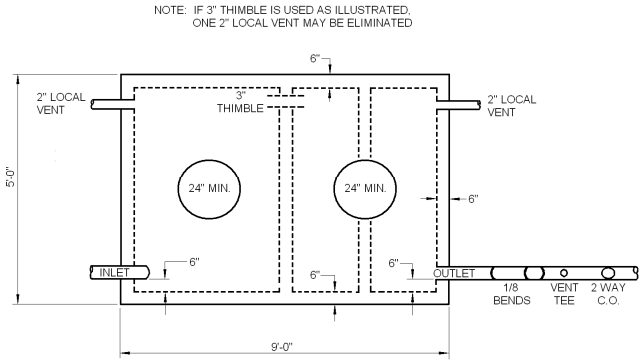

Figure 1005.N.4A (1 of 2) – Grease Trap (top view)

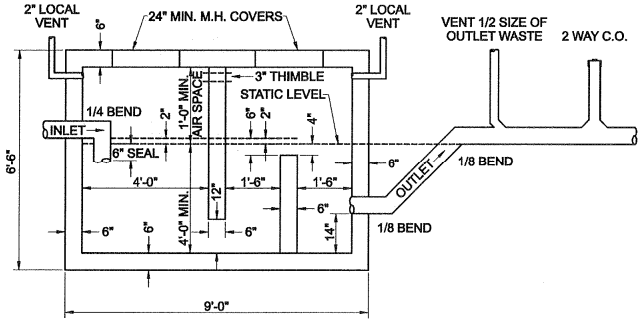

Figure 1005.N.4A (2 of 2) – Grease Trap (side view)

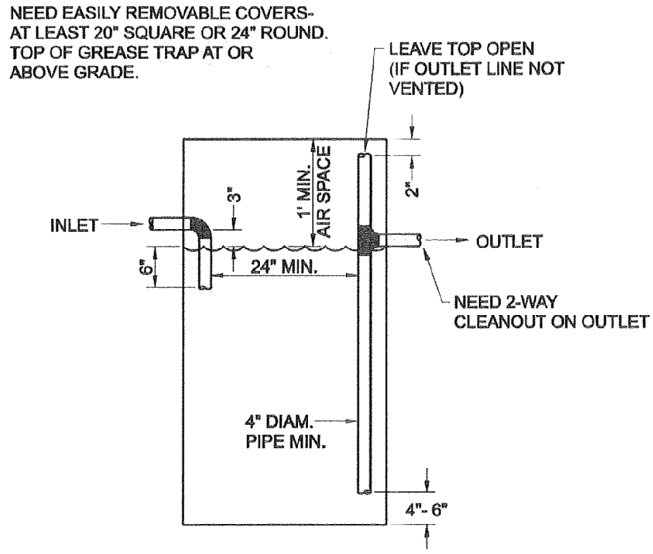

Min. volume below invert of outlet = 125 gallons

= 2' x 2' x 4' water depth (would have to be built 2' x 2' x 5' in order to give 1' air space above water line)

or = 2' x 3' x 3' water depth* (would have to be built 2' x 3' x 4' in order to give 1' air space above water line)

(* This would be preferred in order to keep inlet & outlet at least 24" apart from each other.)

Figure 1005.N.4B – Grease Trap (sanitary details only)

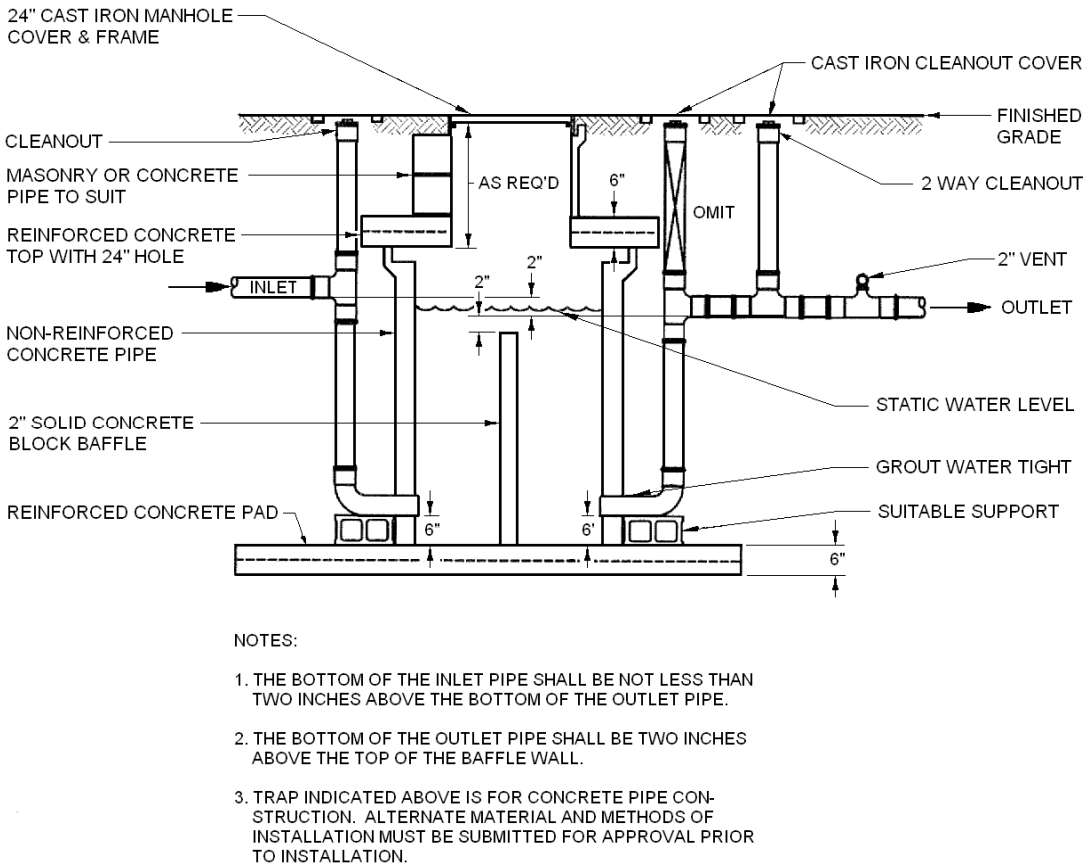

Figure 1005.N.4C—Grease Trap

5. Large Capacity Grease Interceptors. The following design regulations are applicable to large capacity grease interceptors:

a. Large capacity grease interceptors shall be evaluated, tested, and certified for conformance with ASME A 112.14.3 or PDI-G101.

b. The minimum required capacity of large capacity grease interceptors shall be determined based upon the maximum number of persons served during the largest meal period in accordance with §1005.N.3.

c. Grease interceptors shall be maintained in efficient operating condition by periodic removal of the accumulated grease. No such collected grease shall be introduced into any drainage piping or sewerage system.

d. Each grease interceptor shall have an approved water seal of not less than 2 inches in depth or the diameter of its outlet, whichever is greater. The grease interceptor outlet shall be properly vented to prevent the trap from siphoning itself out.

6. Grease Interceptors. The following design regulations are applicable to grease interceptors:

a. When specially allowed by the plumbing official pursuant to §1005.N.2.e, an approved type grease interceptor complying with ASME A 112.14.3 or PDI-G101 and the provisions of this Paragraph may be installed in the waste line leading from sinks, drains and other fixtures or equipment in establishments such as restaurants, cafes, lunch counters, cafeterias, bars and clubs, hotels, hospitals, sanitariums, factory, school or day care center kitchens, markets, or other establishments where grease may be introduced into the drainage or sewage system in quantities that can affect line stoppage or hinder sewage treatment or the functioning of an individual sewerage system, except when, in the opinion of the plumbing official, they are not necessary.

b. The minimum required size of grease interceptors shall be determined based upon fixture discharge rate (gpm) and grease retention capacity (pounds) in accordance with Figure 1005.N.6 (see also §1005.N.6.h.) however, in no case shall a grease interceptor be installed which has an approved rate of flow of less than 20 gallons per minute, except when specially approved by the plumbing official.

c. Each plumbing fixture or piece of equipment connected to a grease interceptor shall be provided with an approved type flow control or restricting device installed in a readily accessible and visible location in the tailpiece or drain outlet of each such fixture. Flow control devices shall be so designed that the flow through such device or devices shall at no time be greater than the rated capacity of the grease interceptors. No flow control device having adjustable or removable parts shall be approved.

d. Each grease interceptor that is rated shall be stamped or labeled by the manufacturer with an indication of its full discharge rate in gallons per minute (gpm). Each grease interceptor allowed to be installed under the provisions of this Paragraph shall have an approved rate of flow which is not less than that given in Table 1005.N.6 based upon the total flow expected in gpm from the total

number of connected fixtures (i.e., each grease interceptor shall be rated equal to or greater than the incoming flow). The total capacity, in gallons, from all fixtures discharging into any such grease interceptor shall not exceed two and one-half (2-1/2) times the certified gallon per minute (gpm) flow rate of the grease interceptor as per Table 1005.N.6.

i. Any grease interceptor installed with the inlet more than 4 feet lower in elevation than the outlet of any fixture discharging into such grease interceptor shall have an approved rate of flow which is not less than 50 percent greater than that given in Table 1005.N.6.

ii. For the purpose of this Paragraph, the term "fixture" shall mean and include each plumbing fixture, appliance, apparatus or other equipment required to be connected to or discharge into a grease interceptor by any provision of this Paragraph.

e. Each fixture discharging into a grease interceptor shall be trapped and vented in an approved manner. An approved type grease interceptor may be used as a fixture trap for a single fixture when the horizontal distance between the fixture outlet and the grease interceptor does not exceed 4 feet and the vertical tailpipe or drain does not exceed 2 1/2 feet.

f. Grease interceptors shall be maintained in efficient operating condition by periodic removal of the accumulated grease. No such collected grease shall be introduced into any drainage piping or sewerage system.

g. Each grease interceptor shall have an approved water seal of not less than 2 inches in depth or the diameter of its outlet, whichever is greater. The grease interceptor outlet shall be properly vented to prevent the trap from siphoning itself out.

h. When grease interceptors are allowed to be installed by the plumbing official in commercial kitchens, the recommended sizing criteria is provided in Table 1005.N.6.

Table 1005.N.6 Grease Interceptors	
Required Rate of Flow Per Minute, Gallons	**Grease Retention Capacity, Pounds**
20	40
25	50
35	70
50	100

Procedure for Sizing Grease Interceptors		
Steps	**Formula**	**Example**
1	Determine cubic content of fixture by multiplying length x width x depth.	A sink 48" long by 24" wide by 12" deep. Cubic content 48 x 24 x 12 = 13,824 cubic inches
2	Determine capacity in gallons. 1 gal = 231 cubic inches	Contents in gallons 13,824 ÷ 231 = 59.8 gallons
3	Determine actual drainage load. The fixture is normally filled to about 75 percent of capacity with water. The items being washed displace about 25 percent of the fixture content, thus actual drainage load = 75 percent of fixture capacity.	Actual Drainage Load 0.75 x 59.8 = 44.9 gallons
4	Determine flow rate and drainage period. In general, good practices dictate a 1-minute drainage period; however, where conditions permit, a 2-minute drainage period is acceptable. Drainage period is the actual time required to completely drain the fixture. Flow rate = Actual Drainage Load ÷ Drainage Period	Calculate flow rate for 1-minute period 44.9 ÷ 1 = 44.9 gpm Flow rate Two-minute period 44.9 ÷ 2 = 22.5 gpm Flow Rate
5	Select interceptor which corresponds to the flow rate calculated. Note: Select next larger size when flow rate falls between two sizes listed.	For 1-minute period, 44.9 gpm requires PDI size "50". For 2-minute period, 22.5 gpm requires PDI size "25".

Figure 1005.N.6

7. Oil Separators. The following regulations are applicable to oil separators.

a. All repair garages and gasoline stations with grease racks or grease pits, and all factories which have oily wastes as a result of manufacturing, storage, maintenance, repair, or testing processes shall be provided with an oil separator which shall be connected to all necessary floor drains. The separation of the vapor compartment shall be independently vented to the outer air. If two or more separation or vapor compartments are used, each shall be vented to the outer air or may connect to a header which is installed at a minimum of 6 inches above the spill line of the lowest floor drain and vented independently to the outer air. The minimum size of a flammable vapor vent shall not be less than 2 inches, and when vented through a sidewall, the vent shall not be less than 10 feet above the adjacent level at an approved location. The interceptor shall be vented on the sewer side and this vent shall not connect to a flammable vapor vent. All oil interceptors shall be provided with gastight cleanout covers which shall be readily accessible. The waste line shall not be less than 3 inches in diameter with a full-size two-way cleanout brought to $grade_{(G)}$. When an interceptor is provided with an overflow, it shall be provided with an overflow line (not less than 2 inches in diameter) to an approved waste oil tank having a minimum capacity of 550 gallons and meeting the requirements of the appropriate authority. The waste oil from the separator shall flow by gravity or shall be pumped to a higher elevation by an automatic pump. Pumps shall be adequately sized and accessible. Waste oil tanks shall have a 2-inch minimum pumpout connection at $grade_{(G)}$ and a 1 1/2-inch minimum vent to atmosphere at an approved location at least 10 feet above $grade_{(G)}$.

b. Each manufactured oil interceptor that is rated shall be stamped or labeled by the manufacturer with an indication of its full discharge rate in gallons per minute (gpm). The full discharge rate to such an oil interceptor shall be determined at full flow. Each oil interceptor shall be rated equal to or greater than the incoming flow and shall be provided with an overflow line to an underground tank.

i. Oil interceptors not rated by the manufacturer shall have a depth of not less than 2 feet below the invert of the discharge drain. The outlet opening shall have not less

than an 18-inch water seal and shall have a minimum capacity as follows:

(a). where not more than three motor vehicles are serviced and/or stored, oil interceptors shall have a minimum capacity of 6 cubic feet, and 1 cubic foot of capacity shall be added for each vehicle up to 10 vehicles; and,

(b). above 10 vehicles, the plumbing official shall determine the size of the oil interceptor required. Where vehicles are serviced only and not stored, oil interceptor capacity shall be based on a net capacity of 1 cubic foot for each 100 square feet of surface to be drained into the oil interceptor, with a minimum of 6 cubic feet.

c. A combination oil and sand interceptor may be installed when the design is approved in writing by the plumbing official.

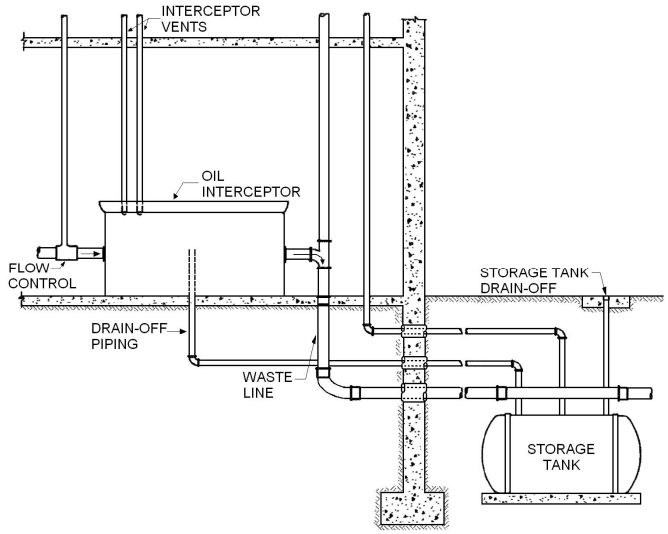

Figure 1005.N.7A—Oil Separator

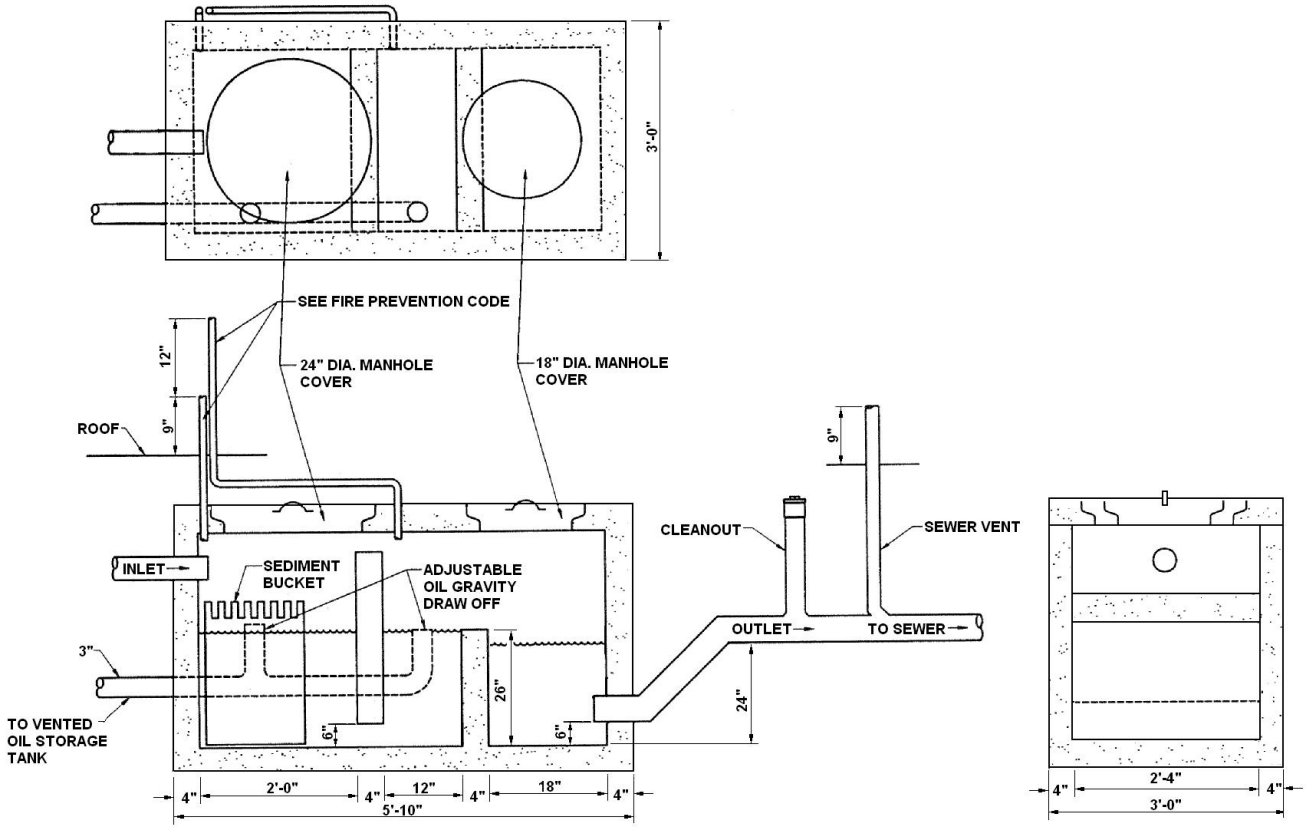

Figure 1005.N.7B—Oil Separator Details

8. Sand Interceptors. The following regulations are applicable to sand interceptors:

a. Multiple floor drains may discharge into one sand interceptor.

b. Sand interceptors shall be built of brick or concrete, prefabricated coated steel, or other watertight material. The sand interceptor shall have an interior baffle for full separation of the interceptor into two sections. The outlet pipe shall be the same size as the inlet, the minimum being 3 inches, and the baffle shall have two openings of the same diameter as the outlet pipe and at the same invert as the outlet pipe. These openings shall be staggered so that there

cannot be a straight line flow between any inlet pipe and the outlet pipe. The invert of the inlet pipe shall be no lower than the invert of the outlet pipe.

i. The sand interceptor shall have a minimum dimension of 2-feet square for the net free opening of the inlet screen and a minimum depth under the invert of the outlet pipe of 24 inches.

ii.For each 5 gallons per minute flow or fraction thereof over 20 gallons per minute, the area of the sand interceptor inlet section is to be increased by 1 square foot. The outlet section shall at all times have a minimum area of 50 percent of the inlet sections.

iii. The outlet section shall be covered by a solid removable cover set flush with the finished floor, and the inlet section shall have an open grating set flush with the finished floor and suitable for the traffic in the area in which it is located.

c. Sand and similar interceptors for every solid shall be so designed and located as to be readily accessible for cleaning, shall have a water seal of not less than 6 inches, and shall be vented.

d. Alternate designs for construction or baffling of sand interceptors complying with the intent of this Part may be submitted to the plumbing official for approval.

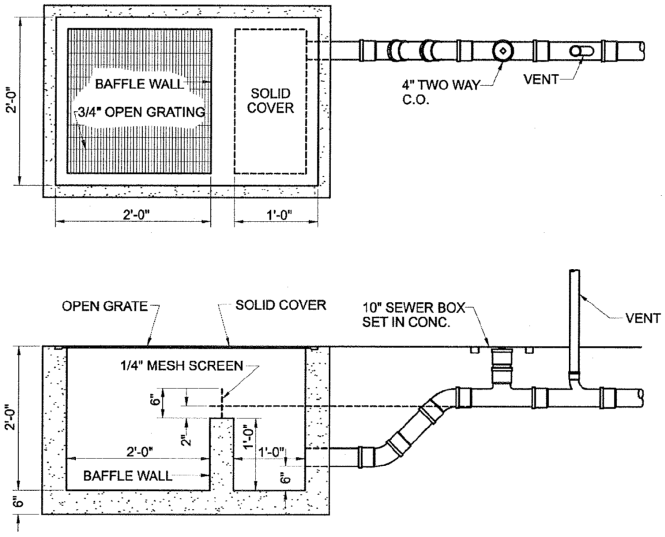

Figure 1005.N.8—Sand Interceptor

9. Laundry Traps. Laundry equipment that does not have integral strainers shall discharge into an interceptor having a wire basket or similar device that is removable for cleaning and that will prevent passage into the drainage system of solids 1/2-inch or larger in maximum dimension, such as string, rags, buttons or other solid materials detrimental to the drainage system. The laundry trap (laundry interceptor/lint trap) and its connection to the drainage system shall conform to the design depicted in Figure 1005.N.9. Any modifications of the design shall be approved by the plumbing official. In additions, the size, location and venting of the interceptor shall be approved by the plumbing official.

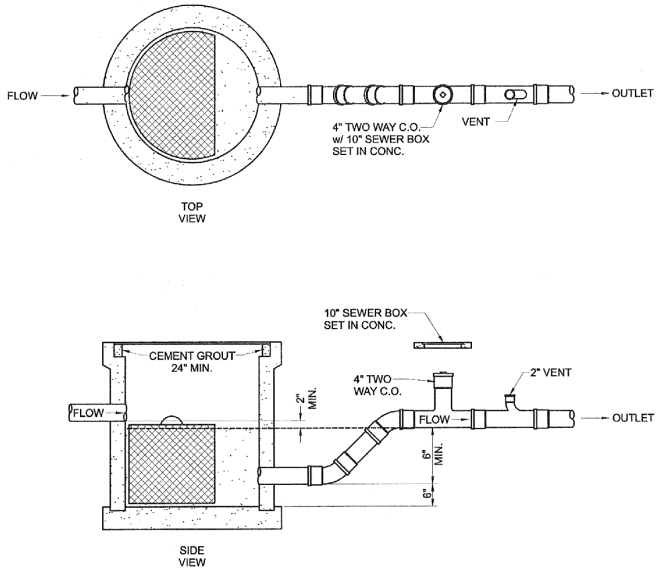

Figure 1005.N.9—Lint Trap (with Non-Corrode Basket)

10. Bottling Separators. Bottling plants shall discharge their process waste water into an interceptor/separator which will provide for the separation of broken glass or other solids before discharging into the drainage system. The design, size, location and venting of the bottling separator shall be approved by the plumbing official.

11. Slaughter House Separators. Slaughtering room drains shall be equipped with separators which shall prevent the discharge into the drainage system of feathers, entrails and other materials likely to clog the drainage system. The design, size, location and venting of the slaughter house separator shall be approved by the plumbing official.

12. Special Type Separators

a. Every fish, fowl and animal slaughter house or establishment and every fish, fowl and meat packing or curing establishment and every soap factory, tallow rendering, fat rendering and hide curing establishment, or any other establishment from which considerable amounts of grease are likely to be discharged into any plumbing system, community sewerage system, commercial treatment facility, or individual sewerage system, shall be connected to and shall drain or discharge into a grease trap meeting the requirements of this Section and approved by the plumbing official for this use.

b. Interceptors or separators for other special type applications shall not be installed until their design, size, location and venting have been approved by the plumbing official.

AUTHORITY NOTE: Promulgated in accordance with R.S. 40:4(A)(7) and R.S. 40:5(2)(3)(7)(9)(16)(17)(20).

HISTORICAL NOTE: Promulgated by the Department of Health and Hospitals, Office of Public Health, LR 38:

Chapter 11. Storm Drainage

§1101. General

A. Scope. The provisions of this Chapter shall govern the materials, design, construction, and installation of storm drainage.

B. Drainage Required. Roofs, paved areas, yards, courts and courtyards shall be drained into a storm sewer system.

1. Exception. Dumpster pad drains shall connect to the sanitary sewerage system in accordance with LAC 51:XXIII.3307.

C. Prohibited Drainage. Storm water shall not be drained into sewers intended for sewage only.

D. Expansion Joints. Expansion joints or sleeves shall be provided where warranted by temperature variations or physical conditions.

E. Subsoil Drains. Where subsoil drains are placed under the cellar or basement floor or are used to surround the outer walls of a building, they shall be made of open-jointed or horizontally split or perforated clay tile, asbestos cement pipe, or plastic pipe meeting the requirements of Table 703, not less than 4-inch diameter. When the building is subject to backwater, the subsoil drain shall be protected by an accessibly located backwater valve. Subsoil drains may discharge into a properly trapped area drain or sump. Such sumps do not require vents.

F. Building Subdrains. Building subdrains located below the building storm sewer level shall discharge into a sump or receiving tank, the contents of which shall be automatically lifted and discharged into the building gravity drainage system as required for building sumps.

G. Pumping System. Pumping systems installed to remove contents of collecting sumps shall include the sump pump, pit, and discharge piping as defined below.

1. Sump Pump. An automatic water pump for the removal of drainage from a sump, pit, or low point in a residential, commercial, or industrial property shall be of a capacity and head appropriate to anticipated use requirements.

2. Sump Pit. The sump pit size shall be not less than 18-inch (457 mm) diameter and may be constructed of tile, steel, plastic, cast iron, concrete, or other material accepted by the plumbing official, topped by a removable cover adequate to support anticipated loads in area of use. The pump floor shall provide permanent support for the pump.

3. Electrical service outlets, when required, shall meet the requirements of NFPA 70 or local codes.

4. Discharge piping shall meet the requirements of §1103.A, §1103.B, §1103.C or §1103.D and shall include a gate valve and a full flow check valve. Size and fittings shall be the same size as, or larger than, pump discharge tapping.

H. Backwater Devices. The installation of backwater devices as protection for fixtures subject to backflow shall be in accordance with requirements of this Part.

I. Tests. The interior leaders and downspouts system shall be tested in accordance with §319.E.

AUTHORITY NOTE: Promulgated in accordance with R.S. 40:4(A)(7) and R.S. 40:5(2)(3)(7)(9)(16)(17)(20).

HISTORICAL NOTE: Promulgated by the Department of Health and Hospitals, Office of Public Health, LR 38:

§1103. Materials

A. Inside Conductors Including Above Ground Storm Drains. Conductors placed within buildings or run in vent or pipe shafts shall be aluminum, cast iron, galvanized steel, galvanized ferrous alloys, brass, copper tubing of a weight not less than that of copper drainage tube Type DWV, copper pipe or Schedule 40 plastic pipe.

B. Building Storm Drains. All building storm drains shall be of materials required for building drains in §§703.C and 703.D.

C. Underground Building Storm Drains. Underground building storm drains, inside the building perimeter, shall be of cast iron soil pipe, ferrous-alloy piping, copper tube Type DWV, or Schedule 40 plastic piping.

D. Building Storm Sewers. The building storm sewer shall be of cast iron soil pipe, vitrified-clay pipe, concrete pipe, or plastic pipe meeting the requirements of Table 703.

AUTHORITY NOTE: Promulgated in accordance with R.S. 40:4(A)(7) and R.S. 40:5(2)(3)(7)(9)(16)(17)(20).

HISTORICAL NOTE: Promulgated by the Department of Health and Hospitals, Office of Public Health, LR 38:

§1105. Specifications

A. Pipe, tubing, and fittings for storm drainage systems shall conform to the standards listed in Table 703.

AUTHORITY NOTE: Promulgated in accordance with R.S. 40:4(A)(7) and R.S. 40:5(2)(3)(7)(9)(16)(17)(20).

HISTORICAL NOTE: Promulgated by the Department of Health and Hospitals, Office of Public Health, LR 38:

§1107. Conductors and Connections

A. Protection. Rain water conductors installed along alleyways, driveways, or other locations where they may be exposed to damage shall be protected.

B. Separation of Storm Drainage from Sanitary Sewers. The sanitary sewer and storm drainage systems of a building shall be entirely separate.

C. Floor Drains. Floor drains shall not be connected to a storm drain.

AUTHORITY NOTE: Promulgated in accordance with R.S. 40:4(A)(7) and R.S. 40:5(2)(3)(7)(9)(16)(17)(20).

HISTORICAL NOTE: Promulgated by the Department of Health and Hospitals, Office of Public Health, LR 38:

§1109. Roof Drains

A. Material. Roof drains shall be of an approved corrosion resistant material with adequate strainer area and shall comply with the applicable standards in Table 303.

B. Strainers. When roof drains are provided they shall have strainers extending not less than 4 inches (102 mm) above the surface of the roof immediately adjacent to the roof drain. Strainers shall have an available inlet area, above roof level, of not less than one and a half times the area of the conductor or leader to which the drain is connected.

C. Flat Decks. Roof drain strainers for use on sun decks, parking decks, and similar areas, normally serviced and maintained, may be of the flat surface type, level with the deck and shall have an available inlet area not less than two times the area of the conductor or leader to which the drain is connected.

D. Roof Drain Flashings. The connection between roofs and roof drains which pass through the roof and into the interior of the building shall be made watertight by the use of proper flashing material.

AUTHORITY NOTE: Promulgated in accordance with R.S. 40:4(A)(7) and R.S. 40:5(2)(3)(7)(9)(16)(17)(20).

HISTORICAL NOTE: Promulgated by the Department of Health and Hospitals, Office of Public Health, LR 38:

§1111. Size of Leaders and Storm Drains

A. Vertical Leaders. Vertical leaders shall be sized for the maximum projected roof area, according to Table 1111.A. If a vertical offset is 45 degrees or less, the leader can be sized

as a vertical pipe. If the offset is greater than 45 degrees, the pipe must be sized as a horizontal pipe.

Table 1111.A Size of Vertical Leaders	
Size of Leader or Conductor[1] (in)	Maximum Projected Roof Area (sq ft)
2	720
2 1/2	1300
3	2200
4	4600
5	8650
6	13,500
8	29,000
1 in = 25.4 mm 1 ft^2 = 0.0929 m^2	

NOTE:
1. The equivalent diameter of square or rectangular leader may be taken as the diameter of that circle which may be inscribed within the cross-sectional area of the leader. See also §1111.B.2.

B. Building Storm Drains. Building storm drains shall comply with the following.

1. The size of the building storm drain or any of its horizontal branches having a slope of 1/2-inch or less per foot (41.6 mm/m) shall be based upon the maximum projected roof area to be handled according to Table 1111.B.

Table 1111.B Size of Horizontal Storm Drains			
Diameter of Drain (in)	Maximum Projected Roof Area for Drains of Various Slopes (sq ft)		
	1/8 in Slope	1/4 in Slope	1/2 in Slope
3	822	1,160	1,644
4	1,880	2,650	3,760
5	3,340	4,720	6,680
6	5,350	7,550	10,700
8	11,500	16,300	23,000
10	20,700	29,200	41,400
12	33,300	47,000	66,600
15	59,500	84,000	119,000
1 in = 25.4mm 1 ft^2 = 0.0929 m^2			

2. Tables 1111.A and 1111.B are based upon a rate of rainfall of 4 inches (102 mm) per hour. If in any state, city or other political subdivision, the maximum rate of rainfall is more or less than 4 inches (102 mm) per hour, then the figures for roof area shall be adjusted proportionately by dividing the figure by four and multiplying by the maximum rate of rainfall in inches (mm) per hour. See §1111.E.

C. Blockage Avoidance. To avoid stoppages, building drainage piping cannot be reduced in size in the direction of flow throughout its length. i.e., an 8-inch (203-mm) horizontal building storm drain must tie to an 8-inch (203-mm) vertical leader, even if Table 1111.A allows for a smaller size for the vertical leader.

D. Vertical Walls. In sizing roof drains and storm drainage piping, one-half (1/2) of the area of any vertical wall which diverts rain water to the roof shall be added to the projected roof area for inclusion in calculating the required size of vertical leaders and horizontal storm drainage piping.

E. Maximum Rates of Rainfall. Primary roof drain systems shall be designed using Tables 1111.A and 1111.B adjusted in accordance with §1111.B.2 for the local rainfall for a 60 minute duration and a 100-year return period in Figure 1111.E. The plumbing official may approve local weather data on the maximum rate of rainfall when available.

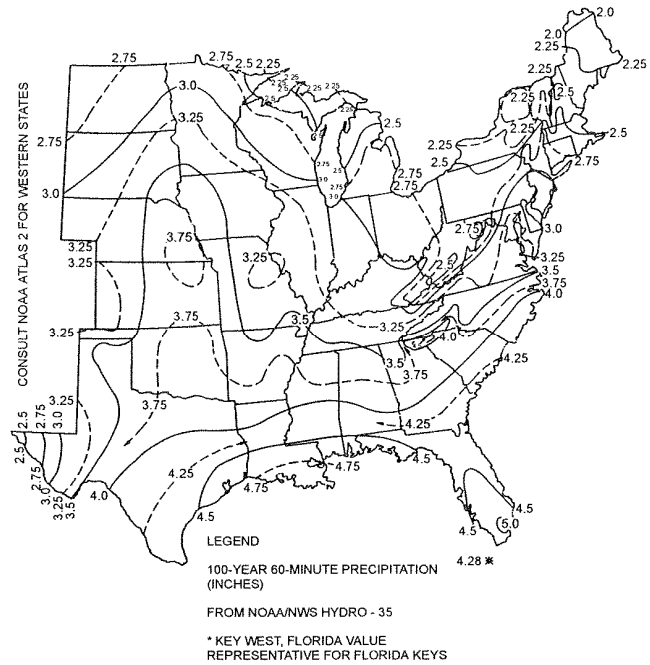

Figure 1111.E—Rainfall Rate for Primary Roof Drains (in./hr.)

F. Parapet Wall Scupper Location. The location of parapet wall roof drainage scuppers and overflow scuppers shall be such that discharge can cause no personal injury or property damage. When neither conductor heads nor gutters are used to catch the water, scupper spouts shall extend past the exterior surface of the building to avoid wetting the building surface.

AUTHORITY NOTE: Promulgated in accordance with R.S. 40:4(A)(7) and R.S. 40:5(2)(3)(7)(9)(16)(17)(20).

HISTORICAL NOTE: Promulgated by the Department of Health and Hospitals, Office of Public Health, LR 38:

§1113. Secondary (Emergency) Roof Drains

A. Secondary Drainage Required. Secondary (emergency) roof drains or scuppers shall be provided where the roof perimeter construction extends above the roof in such a manner that water would be entrapped should the primary drains allow buildup for any reason.

B. Separate Systems Required. Secondary roof drain systems shall have piping and point of discharge separate from the primary system. Discharge shall be above grade$_{(G)}$ in a location which would normally be observed by the building occupants or maintenance personnel.

C. Maximum Rainfall Rate for Secondary Drains. Secondary (emergency) roof drain systems or scuppers shall be sized based on the flow rate caused by the 100-year 15 minute precipitation as indicated in Figure 1113.C. The flow through the primary system shall not be considered when sizing the secondary roof drain system.

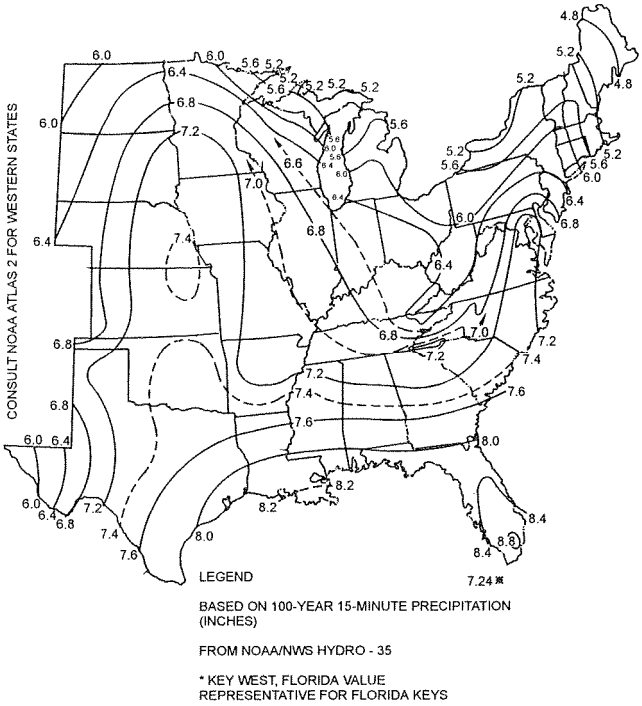

Figure 1113.C—Rainfall Rate for Primary Roof Drains (in./hr.)

AUTHORITY NOTE: Promulgated in accordance with R.S. 40:4(A)(7) and R.S. 40:5(2)(3)(7)(9)(16)(17)(20).

HISTORICAL NOTE: Promulgated by the Department of Health and Hospitals, Office of Public Health, LR 38:

§1115. Values for Continuous Flow

A. Where there is a continuous or semicontinuous discharge into the building storm drain or building storm sewer, as from a pump, ejector, air conditioning plant, or similar device, each gallon per minute of such discharge shall be computed as being equivalent to 24 sq ft (2.23 m^2) of roof area, based upon a 4-inch (102 mm) rainfall.

AUTHORITY NOTE: Promulgated in accordance with R.S. 40:4(A)(7) and R.S. 40:5(2)(3)(7)(9)(16)(17)(20).

HISTORICAL NOTE: Promulgated by the Department of Health and Hospitals, Office of Public Health, LR 38:

§1117. Additional Information for Storm Drainage

A. Additional information for storm drainage is contained in Chapter 18 (Appendices), §1803, Appendix A - Roof Drain Sizing Method. Such additional information in Chapter 18 shall not be construed as superceding any pertinent regulation(s) contained in Chapters 1-17.

AUTHORITY NOTE: Promulgated in accordance with R.S. 40:4(A)(7) and R.S. 40:5(2)(3)(7)(9)(16)(17)(20).

HISTORICAL NOTE: Promulgated by the Department of Health and Hospitals, Office of Public Health, LR 38:

Chapter 12. Alternate Designed Plumbing Systems

§1201. General

A. Approval of alternate designed plumbing systems will be considered on an individual basis.

AUTHORITY NOTE: Promulgated in accordance with R.S. 40:4(A)(7) and R.S. 40:5(2)(3)(7)(9)(16)(17)(20).

HISTORICAL NOTE: Promulgated by the Department of Health and Hospitals, Office of Public Health, LR 38:

§1203. Requirements for Approval

A. Plans and Specifications. Plans and specifications for any proposed alternate designed plumbing system shall be submitted to the state health officer for review and approval prior to construction. Such plans and specifications shall be appropriately sealed and signed by a Louisiana Registered Professional Engineer registered in either civil or mechanical engineering.

B. Responsibility of Professional Engineer. The Professional Engineer referenced in §1203.A shall be responsible for:

1. certifying the system design;
2. inspecting the system during installation;
3. certifying that the installed system is in compliance with the approved design specifications;
4. supervising any test(s) performed on the system; and,
5. certifying the results of any required testing.

C. Owner's Notice. Any permits issued for an alternate designed plumbing system shall be issued only after the owner of the building has assured the state health officer in writing that he is aware of the third party notification requirements of §1207. In addition, any permits issued for work requiring a performance test shall be issued only after the owner of the building has assured the state health officer in writing that he is also aware of the testing requirements of §1205.

AUTHORITY NOTE: Promulgated in accordance with R.S. 40:4(A)(7) and R.S. 40:5(2)(3)(7)(9)(16)(17)(20).

HISTORICAL NOTE: Promulgated by the Department of Health and Hospitals, Office of Public Health, LR 38:

§1205. Tests

A. General Testing Requirements. The state health officer and/or the local plumbing official may also require tests to be conducted prior to occupancy to assure that the proposed design is satisfactory and complies with the intent of this Part. Such tests shall be made in accordance with approved standards, but in the absence of such standards, the state health officer and/or the local plumbing official shall specify the test procedure(s). In general, such tests shall indicate that all fixtures properly discharge when flushed simultaneously with not less than 1-inch (25.4mm) of water seal left in the trap after testing and that there is no evidence of sewer gas passing through the trap seal.

B. Roughing-In. The roughing-in test shall be as provided for in other Chapters of this Part.

C. Tests and Inspection of the Single Stack Discharge and Ventilating Pipe System or any other Single Stack Plumbing System. When a single stack discharge and ventilating pipe system (a specific type of alternate designed plumbing system) or any other single stack plumbing system has been approved by the state health officer under the requirements of this Chapter, the following tests/inspections shall be performed.

1. Performance Test Required. In any building in which fixtures or appliances, other than those specifically provided for in Table 1811.D.5.5A, are to be installed or in existing buildings in which the single stack discharge and ventilating pipe system or any other single stack plumbing system exists and additional fixtures are to be added, the plumbing official shall require and supervise a performance test as hereafter provided.

2. Application and Restrictions. When required in new construction, the system shall successfully pass the test before the building is permitted to be occupied. In existing buildings where piping is added for additional fixtures or appliances, such new piping shall not be placed in service until the performance test is approved. Should the system fail to pass the test, the new construction shall be modified

as the plumbing official may direct, or the system shall be reconstructed to meet the requirements of other Chapters of this Part, or the added fixtures and appliances shall be removed and all waste and vent pipes permanently closed so as to form no dead ends and all wall and other openings shall be put back in their original or finished condition.

EXCEPTION: Central washing facilities connected separately to the building drain or sewer in an installation that is otherwise constructed in accordance with other Chapters of this Part are exempt from the performance test.

3. Performance Test. Every trap shall retain not less than 1-inch (25.4 mm) of seal when subjected to the appropriate discharge tests given below. These tests are designed to simulate the probable worst conditions in practice. Each test should be repeated three times, the trap being recharged before each test, and the maximum loss of seal in any one test, measured by a dip stick, shall be taken as the significant result. The number of fixtures to be discharged simultaneously when investigating the effect of the flow of water down the stack depends on the number of fixtures and on the frequency with which they are used. The number of fixtures to be discharged simultaneously is given in Table 1811.D.11.

4. Test for Self-Siphonage. To test for the effect of self-siphonage, the waste fixture shall be filled to overflowing level and discharged in the normal way. The seal remaining in the trap shall be measured when the discharge has finished. This test is most important for wash basins, but it is not applicable for water closets which shall be flushed in the normal manner.

AUTHORITY NOTE: Promulgated in accordance with R.S. 40:4(A)(7) and R.S. 40:5(2)(3)(7)(9)(16)(17)(20).

HISTORICAL NOTE: Promulgated by the Department of Health and Hospitals, Office of Public Health, LR 38:

§1207. Third Party Notification

A. After installation of any alternate designed plumbing system, the owner shall notify third parties of its existence by having a document recorded in the Clerk of Court's conveyance records in the parish in which such alternate designed plumbing system has been installed. The document so recorded shall reference a prior conveyance record (COB/folio) of the parcel of ground upon which the alternate designed plumbing system is located (e.g., the conveyance recording a previous Act of Sale of the parcel of ground). The document will state that the plumbing of the building located on this particular parcel of ground contains an "alternate designed plumbing system" which cannot be modified in any manner by future owners/lessees without first obtaining an approval of such proposed modifications from the state health officer in accord with the requirements of Chapter 12 (Alternate Designed Plumbing Systems) of the Louisiana State Plumbing Code. Proof of recordation shall be provided to the state health officer and the local plumbing official prior to issuance of a building occupancy permit.

AUTHORITY NOTE: Promulgated in accordance with R.S. 40:4(A)(7) and R.S. 40:5(2)(3)(7)(9)(16)(17)(20).

HISTORICAL NOTE: Promulgated by the Department of Health and Hospitals, Office of Public Health, LR 38:

Chapter 13. Medical Facilities Plumbing Systems [formerly Appendix G - Medical Facilities Plumbing Systems]

§1301. General

A. Scope. The following Subparagraphs provide the scope of this Chapter.

1. The provisions of this Chapter are intended to set out those items of hospital/medical facilities plumbing systems which differ from plumbing systems in other buildings. Special care shall be accorded the hospital plumbing system because of its direct relationship to adequate medical care and the need for added protection for patients and hospital personnel from health hazards.

2. It is understood that hospital/medical facilities plumbing systems shall conform not only to the requirements of this Chapter, but also to the requirements contained in the other Chapters of the Louisiana State Plumbing Code.

3. The provisions of this Chapter shall apply to plumbing installations in clinics, doctors' offices, nursing homes, and other medical facilities, etc., as well as in hospital installations.

B. Definitions. The following words and terms shall, for the purposes of this Chapter and as stated elsewhere in this Part, have the meanings shown herein. Refer to Chapter 2 for general definitions.

Aspirator—a fitting or device supplied with water or other fluid under positive pressure which passes through an integral orifice or constriction causing a vacuum. (*Aspirators* are often referred to as suction apparatus, and are similar in operation to an ejector.)

Autoclave—see Sterilizer, Pressure.

Autopsy Table—a *fixture* or table used for post-mortem examination of a body.

Bedpan Hopper—see *clinical sink*.

Bedpan Steamer or *Bedpan Boiler*—a *fixture* used for scalding bedpans or urinals by direct application of steam or boiling water.

Bedpan Washer and Sterilizer—a *fixture* designed to wash bedpans and to flush the contents into the *sanitary drainage system*. It may also provide for emptying, cleaning, and sometimes for steaming bedpans, and for no other purpose.

Bedpan Washer Hose—a device supplied with hot and cold water and located adjacent to a water closet or *clinical sink* to be used for cleansing bedpans.

Clean Utility Room—a workroom, normally located near the nurses' station, designed and equipped to facilitate the heating and refrigeration of food items, placement of an ice machine, and/or the preparation, cleaning and incidental sterilization of the various supplies, instruments, utensils, etc., involved in nursing treatment and care.

Clinical Sink—a *fixture* meeting the design requirements of §1303.B for the rinsing of bedpans and soiled linen. Such fixtures shall have a *trap* size of not less than 3 inches.

Effective Opening—the minimum cross-sectional area of the *water outlet* at the point of water supply discharge or the minimum cross-sectional area of the *liquid waste* outlet at

the point of *indirect waste pipe* discharge, measured or expressed in terms of:

a. diameter of a circle; or,

b. if the outlet is not circular, the diameter of a circle of equivalent cross-sectional area.

[This term is applicable to and mainly used when determining the minimum unobstructed vertical distance through the free atmosphere {*air gap (water distribution)*} required between the *water outlet* and the *flood rim level* of the *fixture* or receptacle into which it is discharging. This term may also be applicable when determining the minimum unobstructed vertical distance through the free atmosphere {*air gap (drainage system)*} required between a *liquid waste* outlet of an *indirect waste pipe* and the *flood rim level* of the *indirect waste receptor*.]

Medical Facilities—hospitals, ambulatory surgical centers, renal dialysis centers, nursing homes, doctor's offices, clinics, and similar facilities providing medical care.

Nurses' Station—an area in the nursing unit separated from the corridor by counter or desk, designed to permit nurses to record and file each patient's history and progress, observation and control of corridor, preparation of medicines and maintain contact with patients, the hospital and the outside by local and public means of communication.

Scrub Sink—a device usually located in the operating suite to enable operating personnel to scrub their hands prior to the operating procedure. The hot and cold water supply is activated by a knee-action mixing valve or by wrist or pedal control

Soiled Utility Room—a small workroom, normally located near the nurses' station, which is designed and equipped for emptying, cleaning, and sometimes for steaming bedpans and patient urinals, and for no other purpose.

Sterilizer, Boiling Type—a device or *fixture* of the non-pressure design which is used for boiling instruments, utensils, and other equipment in order to disinfect them. Some devices are portable and others are connected to the *plumbing system*.

Sterilizer, Instrument—a device for the sterilization of various instruments.

Sterilizer, Pressure Instrument Washer Sterilizer—a device or *fixture* of the pressure vessel design which both washes and sterilizes instruments during the operating cycle of the device or *fixture*.

Sterilizer, Pressure—a device or *fixture* of the pressure vessel design which uses steam under pressure for sterilizing. Also called an *autoclave*.

Sterilizer, Utensil—a device or *fixture* for the sterilization of utensils used in hospital services.

Sterilizer Vent—a separate pipe or *stack*, indirectly connected to the building *drainage system* at the lower terminal, which receives the vapors from non-pressure sterilizers, or the exhaust vapors from *pressure sterilizers*, and conducts the vapors directly to the outer air. Sometimes called vapor, steam, atmospheric, or exhaust vent.

Sterilizer, Water—a device for sterilizing water and storing sterile water.

Still—a device used in distilling liquids.

AUTHORITY NOTE: Promulgated in accordance with R.S. 40:4(A)(7) and R.S. 40:5(2)(3)(7)(9)(16)(17)(20).

HISTORICAL NOTE: Promulgated by the Department of Health and Hospitals, Office of Public Health, LR 38:

§1303. Fixtures

A. Bedpans. Acceptable flush rim bedpan hoppers (clinical sink), bedpan washers, and/or other acceptable fixtures and equipment shall be provided for the disposing of bedpan contents and the cleansing and disinfection of bedpans in soiled utility rooms.

B. Clinical Sink. A clinical sink shall have an integral trap in which the upper portion of a visible trap seal provides a water surface. The fixture shall be so designed as to permit complete removal of the contents by siphonic or blowout action, or both, and to reseal the trap. A flushing rim shall provide water to cleanse the interior surface. The fixture shall have flushing and cleansing characteristics similar to a water closet.

C. Prohibited Use of Clinical and Service Sinks. A clinical sink serving a soiled utility room shall not be considered as a substitute for, nor shall it be used as, a janitor's service sink. A janitor's service sink shall not be used for the disposal of urine, fecal matter, or other human waste.

D. Ice Prohibited in Soiled Utility Room. Machines for manufacturing ice, or any device for the handling or storage of ice, shall not be located in a soiled utility room. Machines for manufacturing ice, or devices for handling or storage of ice intended for either human consumption or packs, may be located in a clean utility room, floor pantry, or diet kitchen.

E. Sterilizer Equipment Requirements. The following apply to sterilizer equipment.

1. It shall be unlawful to de-scale or otherwise submit the interior of water sterilizers, stills, or similar equipment to acid or other chemical solutions while the equipment is connected to the water or drainage system.

2. New pressure sterilizers and pressure instrument washer-sterilizers hereafter installed shall display, in a location clearly visible at all times, the ASME Standard symbol and data plate.

3. All sterilizer piping and devices necessary for the operation of sterilizers shall be accessible for inspection and maintenance, and shall satisfy the following.

a. Steam supplies to sterilizers, including those connected by pipes from overhead mains or branches, shall be drained to prevent any excess moisture from reaching the sterilizer. The condensate drainage from the steam supply shall be discharged by gravity.

b. Steam condensate return from sterilizers shall not be connected to pressure or vacuum return systems; only gravity returns shall be acceptable. Steam condensate returns from sterilizers shall not be connected to overhead mains or branches.

c. Pressure sterilizers should be equipped with an acceptable means of condensing and cooling the exhaust steam vapors. Nonpressure sterilizers should be equipped with an acceptable device which will automatically control the vapors in a manner so as to confine them within the vessel, or equipped with an acceptable means of condensing and cooling the vapors.

d. Gas fired equipment or apparatus, requiring either water or drainage connections or both, shall meet the standards of the American National Standards Institute.

F. Special Elevations. Control valves, vacuum outlets, and devices which protrude from a wall of an opening, emergency, recovery, examining, or delivery room, or in a corridor or other locations where patients may be transported on a wheeled stretcher, shall be so located at an elevation which will preclude bumping the patient or stretcher against the device. When necessary to install at a low elevation, safety precautions should be taken to protect the personnel.

G. Plumbing in Mental Hospitals. In mental hospitals, special consideration should be given to piping, controls and fittings of plumbing fixtures as required by the types of mental patients being treated. Pipes or traps should not be exposed, and fixtures should be substantially bolted through walls.

H. Handwashing Facilities. Medical facilities, including doctor's offices and clinics, shall be provided with hand washing facilities within each patient examination and treatment room. The hand wash facility shall be provided with hot and cold water delivered via a mixing faucet.

AUTHORITY NOTE: Promulgated in accordance with R.S. 40:4(A)(7) and R.S. 40:5(2)(3)(7)(9)(16)(17)(20).

HISTORICAL NOTE: Promulgated by the Department of Health and Hospitals, Office of Public Health, LR 38:

§1305. Drainage and Venting

A. Ice Storage Chest Drains. Any drain serving an ice storage chest or box shall discharge over an indirect waste receptor separate from all other fixture wastes. Each terminal shall discharge through an air gap (drainage system) above the receptor. The end shall be covered with a removable screen of not less than 10 mesh per square inch (15.5 mesh per 1000 sq mm), and if discharging vertically, the terminal shall be cut at an angle of 45° (0.785 rad).

B. Bedpan Washers and Clinical Sinks. Bedpan washers and clinical sinks shall be connected to the soil pipe system and vented following the requirements as applied to water closets, except that bedpan washers require additional local vents.

C. Sterilizer Wastes. Wastes for sterilizers shall conform with the following.

1. Indirect Wastes Required. All sterilizers shall be provided with individual and separate indirect wastes, with air gaps (drainage system) of not less than two diameters of the waste tailpiece. The upper rim of the receptor, funnel, or basket type waste fitting shall be not less than 2 inches (51 mm) below the vessel or piping, whichever is lower. Except as provided in Paragraphs 2 and 4 of this Subsection, a "P" trap shall be installed on the discharge side of, and immediately below, the indirect waste connection serving each sterilizer.

2. Recess Room Floor Drain. Floor drains in a room or area where the sterilizer is recessed shall conform with the following.

a. In all recess rooms containing the recessed or concealed portions of sterilizers, not less than one acceptable floor drain, connecting to the drainage system, shall be installed in a manner to drain the entire floor area.

b. The recess room floor drain waste and trap shall be a minimum 3-inch (76 mm) diameter. It shall receive the drainage from at least one sterilizer within the recess room to assure maintenance of the floor drain trap seal. The sterilizer drain shall be installed on a branch taken off between the floor drain trap and the drain head. An individual waste trap shall not be required on this type of installation.

3. Prohibited Connections. Branch funnel and branch basket type fittings, except as provided in Paragraph 4 of this Subsection, are prohibited on any new installation or when relocating existing equipment. Existing branch funnel or branch basket type installations shall be provided with an acceptable indirect waste below the branch connections.

4. Battery Assemblies. A battery assembly of not more than three sterilizer wastes may drain to one trap, provided the trap and waste are sized according to the combined fixture unit rating, the trap is located immediately below one of the indirect waste connections, the developed distance of a branch does not exceed 8 feet (2438 mm), and the branches change direction through a tee-wye or wye pattern fitting.

5. Bedpan Steamers, Additional Trap Required. A trap with a minimum seal of 3 inches (76 mm) shall be provided in a bedpan steamer drain located between the fixture and the indirect waste connection.

6. Pressure Sterilizer. Except when an exhaust condenser is used, a pressure sterilizer chamber drain may be connected to the exhaust drip tube before terminating at the indirect waste connection. If a vapor trap is used, it shall be designed and installed to prevent moisture being aspirated into the sterilizer chamber. The jacket steam condensate return, if not connected to a gravity steam condensate return, shall be separately and indirectly wasted. If necessary to cool a high temperature discharge, a cooling receiver, trapped on its discharge side, may serve as the fixture trap.

7. Pressure Sterilizer Exhaust Condensers. The drain from the condenser shall be installed with an indirect waste as prescribed in this Part. If condensers are used on pressure sterilizers, the chamber drain shall have a separate indirect waste connection.

8. Water Sterilizer. All water sterilizer drains, including tank, valve leakage, condenser, filter and cooling, shall be installed with indirect waste and according to §1305.C.2.a.

9. Pressure Instrument Washer-Sterilizer. The pressure instrument washer-sterilizer chamber drain and overflow may be interconnected. Also, they may be interconnected with the condensers. The indirect waste shall follow the provision set forth in this Part.

D. Aspirators. In operating rooms, emergency rooms, recovery rooms, delivery rooms, examining rooms, autopsy rooms, and other locations except laboratories, where aspirators are installed for removing blood, pus, or other fluids, the discharge from any aspirator shall be indirectly connected to the drainage system. The suction line shall be provided with a bottle or similar trap to protect the water supply.

E. Vacuum System Stations. Vacuum system station locations shall be considered from the standpoint of convenience and practical use. The receptacles should be built into cabinets or recesses but shall be visible and readily accessible.

F. Bottle System. Vacuum (fluid suction) systems intended for collecting, removing or disposing of blood, pus or other fluids by the so-called bottle system shall be

provided with receptacles, which are equipped with an overflow preventative device, at each vacuum outlet station. Each vacuum outlet station should be equipped with a secondary safety receptacle as an additional safeguard against fluids, other than air entering the vacuum piping systems.

G. Central Disposal System Equipment. All central vacuum (fluid suction) systems shall assure continuous service. Systems equipped with collecting or control tanks shall provide for draining and cleaning of the tanks while the system is in operation. In hospitals or institutions having emergency power provisions, the system shall be capable of remaining in service during the use of emergency power. The exhausts from a vacuum pump used in connection with a vacuum (fluid suction) system shall discharge separately to the outer atmosphere. The exhaust discharge shall not create a nuisance or hazard within, without, around or about the premises. Termination of the exhaust to the atmosphere shall be the same as required for sanitary sewer vents.

H. Central Vacuum and Disposal Systems. Central vacuum and disposal systems shall conform with the following.

1. The waste from a central vacuum (fluid suction) system of the disposal type which is connected to the drainage system, whether the disposal be by barometric lag, collection tanks, or bottles, shall be directly connected to the sanitary drainage system through a trapped waste.

2. The piping of a central vacuum (fluid suction) system shall be of corrosion resistant material having a smooth interior surface. A branch shall not be less than 1/2-inch for one outlet and sized according to the number of vacuum outlets, and a main shall not be less than 1-inch. The pipe sizing shall be increased according to acceptable engineering practices. All piping shall be provided with adequate and accessible cleanout facilities on mains, and branches, and shall be accessible for inspection, maintenance, and replacements.

I. Condensate Drains for Space Cooling and Heating Systems. The lowest point of a condensate riser or risers shall be trapped and discharged over an indirect waste sink. The trap may be either a "P" or a "running trap" with a cleanout. A branch shall be installed upstream from the condensate drain trap for flushing and resealing purposes. The condensate drain and trap shall be located above the lowest floor level of the building.

J. Vent Material. Material for local vents serving bedpan washers and sterilizer vents serving sterilizers shall be sufficiently rust proof, erosion and corrosion resistant to withstand intermittent wetting and drying from steam vapors, to withstand the distilled water solvent action of the steam vapors and to withstand frequent and immediate changes of temperatures.

K. Vent Connections Prohibited. Connections between local vents serving bedpan washers, sterilizer vents serving sterilizing apparatus and normal sanitary plumbing systems are prohibited. Furthermore, only one type of apparatus shall be served by a given local vent.

L. Local Vents and Stacks. Local vents and stacks shall comply with the following.

1. Bedpan washers shall be vented to the outer atmosphere by means of one or more local vents. Termination of the vent to the atmosphere shall be the same as required for sanitary sewer vents. The local vent for a bedpan washer shall not be less than a 2-inch diameter pipe. A local vent serving a single bedpan washer may drain to the fixture served.

2. Where bedpan washers are located above each other on more than one floor, a local vent stack may be installed to receive the local vent on the various floors. More than three bedpan washers shall not be connected to a 2-inch local vent stack, six to a 3-inch local vent stack, and 12 to a 4-inch local vent stack. In multiple installations, the connections between a bedpan washer local vent and a local vent stack shall be made by use of the tee or tee-wye sanitary pattern drainage fittings, installed in an upright position.

3. The bottom of the local vent stack, except when serving only one bedpan washer, shall be drained by means of a trapped and vented waste connection to the plumbing sanitary drainage system. The trap and waste shall be the same as the local vent stack.

4. A water supply of not less than 1/4-inch minimum tubing shall be taken from the flush supply of each bedpan washer on the discharge or fixture side of the vacuum breaker (taken off at least 4 inches below the critical level of the vacuum breaker), trapped to form not less than a 3-inch (76 mm) seal, and connected to the local vent stack on each floor. The water supply shall be so installed as to provide a supply of water to the local vent stack for cleansing and drain trap seal maintenance each time a bedpan washer is flushed.

M. Sterilizer Vents and Stacks. Sterilizer vents and stacks shall comply with the following.

1. Multiple installations of pressure and nonpressure sterilizers shall have their vent connections to the sterilizer vent stack made by means of inverted wye fittings. Such vent connections shall be accessible for inspection and maintenance.

2. The connection between sterilizer vent or exhaust openings and the sterilizer vent stack shall be designed and installed to drain to the funnel or basket type waste fitting. In multiple installations, the sterilizer vent stack shall be drained separately to the lowest sterilizer funnel or basket type waste fitting or receptor.

N. Sterilizer Vent Stack Sizes. Sterilizer vent stack sizing shall comply with the following.

1. The minimum diameter of a sterilizer vent serving a bedpan steamer shall be 1 1/2 inches. Multiple installations shall be sized according to Table 1305.N.1.

2. The minimum diameter of a sterilizer vent stack shall be 2 inches when serving a utensil sterilizer, and 1 1/2 inches when serving an instrument sterilizer. Combinations of boiling type sterilizer vent connections shall be based on Table 1305.N.1.

3. Sterilizer vent stacks shall be 2 1/2 inches minimum. Those serving combinations of pressure sterilizer exhaust connections shall be sized according to Table 1305.N.2.

4. The minimum diameter of a sterilizer vent stack serving an instrument washer-sterilizer shall be 2-inch diameter. Not more than two sterilizers shall be installed on a 2-inch stack, and not more than four on a 3-inch stack.

Table 1305.N.1 Stack Sizes for Bedpan Steamers and Boiling Type Sterilizers (in) (Number of connections of various sizes permitted to various sized sterilizer vent stacks)			
Stack Size (in)	Connection Size (in)		
	1 1/2		2
1 1/2 (see note 1)	1	or	0
2	2	or	1
2 (see note 2)	1	and	1
3 (see note 1)	4	or	2
3 (see note 2)	2	and	2
4 (see note 1)	8	or	4
4 (see note 2)	4	and	4
1 in = 25.4 mm			

NOTES:
1. Total of each size.
2. Combination of sizes.

Table 1305.N.2 Stack Sizes for Pressure Sterilizers (in) (Number of connections of various sizes permitted to various sized vent stacks)				
Stack Size (in)	Connection Size (in)			
	3/4	1	1 1/4	1 1/2
1 ½ (Note 1)	3 or	2 or	1 or	1
1 ½ (Note 2)	2 and	1		
2 (Note 1)	6 or	3 or	2 or	1
2 (Note 2)	3 and	2		
2 (Note 2)	2 and	1 and	1	
2 (Note 2)	1 and	1 and	1	
3 (Note 1)	15 or	7 or	5 or	3
3 (Note 2)		1 and	2 and	2
	1 and	5 and		1
1 in = 25.4 mm				

NOTES:
1. Total of each size.
2. Combination of sizes.

O. Radioactive Materials. All radioactive materials shall be disposed of in a manner so as not to create a hazard to operation and maintenance personnel of the institution or to the public. Specific permission shall be secured from the proper authority to dispose of any radioactive material to the drainage system.

AUTHORITY NOTE: Promulgated in accordance with R.S. 40:4(A)(7) and R.S. 40:5(2)(3)(7)(9)(16)(17)(20).

HISTORICAL NOTE: Promulgated by the Department of Health and Hospitals, Office of Public Health, LR 38:

§1307. Water Supply

A. Water Service. All hospitals should have dual services installed in a manner to provide an uninterrupted supply of water in case of a water main break, etc.

B. Hot Water Distribution System. Hot water circulating mains and risers should be run from the hot water storage tank to a point directly below the highest fixture at the end of each branch main. Where the building is higher than three stories, each riser shall be circulated. Each main, branch main, riser and branch to a group of fixtures of the water system shall be valved.

C. Vacuum Breaker Installations. The following shall be considered concerning the installation and use of vacuum breakers.

1. For ordinary hose connections, the maximum height at which any hose is to be used shall be treated as its flood level.

2. Where low volume flows might cause leaking or spitting at the vacuum breaker parts, back pressure may be developed by installing an acceptable minimum orifice valve on the discharge side of the vacuum breaker. This shall be in addition to the regular control valve. This type of installation shall be subject to review and acceptance by the plumbing official before installation.

D. Prohibited Water Closet and Clinical Sink Supply. Jet or water supplied orifices, except those supplied by the flush connections, shall not be located in or connected with a water closet bowl or clinical sink. This Subsection shall not prohibit an acceptable bidet installation.

E. Special Equipment, Water Supply Protection. Table 1307.E sets forth the requirements which shall be followed in protecting the water supply for hospital fixtures against backflow or backsiphonage.

F. Clinical, Hydrotherapeutic and Radiological Equipment. All clinical, hydrotherapeutic, radiological, or any equipment, whether mentioned or not, which is water supplied or discharges to the waste system, shall meet the requirements of this Section and other Sections of this Part covering cross connectors, air gaps, vacuum breakers, and check valves. Special equipment and devices found under these classes include those listed in Table 1307.F.

Table 1307.E Fixtures and Their Water Supply Protection		
Fixtures	Type of protection[1]	Remarks
Aspirators:		
Laboratory	Vacuum breaker	
Portable	Vacuum breaker	
Vacuum system	Vacuum breaker	
Bedpan:		
Washers	Vacuum breaker	
Washer hose	Vacuum breaker	Locate 5 ft above floor.
Boiling type sterilizer	Air gap	Not less than twice the effective opening of the water supply.
Exhaust condenser	Vacuum breaker	
Flush floor drain	Vacuum breaker	Locate 6 ft above floor.
Hose connection	Vacuum breaker	
Pressure instrument		
Washer-sterilizer	Vacuum breaker	
Pressure sterilizer	Vacuum breaker	
Vacuum systems:		
Cleaning	Air gap or vacuum breaker	
Fluid suction	Air gap or vacuum breaker	
1 ft = 304.8 mm		

NOTE:
1. Where atmospheric vacuum breakers are used, they shall be installed after the last control valve.

G. Condensate Drain Trap Seal. A water supply shall be provided for cleaning, flushing, and resealing the condensate trap. The source of the water supply shall be a refrigerator condenser discharge, a drinking fountain waste, or other acceptable method of flushing and resealing the trap. The water supply shall be not less than 1/2-inch diameter pipe

and shall discharge through an air gap not less than twice the diameter of the supply pipe.

H. Valve Leakage Diverter. Each water sterilizer which may be filled with water through directly connected piping shall be equipped with an acceptable leakage diverter and/or bleed-line on the water supply control valve to indicate and conduct any leakage of unsterile water away from the sterile zone.

Table 1307.F Classes of Clinical, Hydrotherapeutic and Radiological Equipment			
Clinical	**Hydrotherapeutic**	**Radiological**	**Other**
Dental cuspidors	Control units	Diagnostic x-ray	Violet ray
Surgical cuspidors	Arm bath	Therapy x-ray	Photographic
Dental (flush rim)	Leg bath	X-ray transformers	developing
lavatories	Tub bath	X-ray oil tank	Film
Sitz bath	Immersion bath	Diffraction	developing
Emergency bath	Shower bath	X-ray developing	Microscopic
Receiving bath	Needle bath		
Prenatal bath	Tank		
Infant bath	Pool		
Prophylaxis	Hose		
Shampoo	Syringe douche		
Massage			

AUTHORITY NOTE: Promulgated in accordance with R.S. 40:4(A)(7) and R.S. 40:5(2)(3)(7)(9)(16)(17)(20).

HISTORICAL NOTE: Promulgated by the Department of Health and Hospitals, Office of Public Health, LR 38:

§1309. Medical Gas and Medical Vacuum Systems

A. Where medical gas and medical vacuum systems are installed, the gas piping, outlets, manifold rooms and storage rooms shall be installed in accordance with all of the requirements of the NFPA 99 by individuals properly licensed by the State Plumbing Board of Louisiana (see LAC 46:LV).

AUTHORITY NOTE: Promulgated in accordance with R.S. 40:4(A)(7) and R.S. 40:5(2)(3)(7)(9)(16)(17)(20).

HISTORICAL NOTE: Promulgated by the Department of Health and Hospitals, Office of Public Health, LR 38:

Chapter 14. Reference Standards

§1401. Scope

A. This Chapter contains the designations, names and edition of standards referenced in this Part listed alpha-numerically and the Section numbers where they are referenced.

AUTHORITY NOTE: Promulgated in accordance with R.S. 40:4(A)(7) and R.S. 40:5(2)(3)(7)(9)(16)(17)(20).

HISTORICAL NOTE: Promulgated by the Department of Health and Hospitals, Office of Public Health, LR 38:

§1403. Referenced Standards

A. Products manufactured to those standards which are followed by the word "Listed" are required to be listed regardless of the standards' requirements for listing.

Standard Designation	Section/Table
ANSI A21.4-2008*, Cement-Mortar Lining for Ductile-Iron Pipe and Fittings for Water (same as AWWA C104)	Table 303
ANSI A21.10-2008 (R2012)*, Ductile-Iron and Gray-Iron Fittings (same as AWWA C110)	Table 603
ANSI A21.11-2006*, Rubber Gasket Joints for Ductile-Iron Pressure Pipe and Fittings (same as AWWA C111)	709.G
ANSI A21.51-2009*, Ductile-Iron Pipe, Centrifugally Cast (same as AWWA C151)	Table 603
ANSI A21.53 -2006*, Ductile-Iron Compact Fittings for Water Service (same as AWWA C153)	Table 603
ANSI A117.1-2003*, Standard for Accessible and Usable Buildings and Facilities	415.I.1, 415.I.3
ANSI A118.10-2008, Load Bearing, Bonded, Waterproof Membranes for Thin-Set Ceramic Tile and Dimension Stone Installation	Table 303, 303.G.7.c
ANSI B16.32-1992, Cast Copper Alloy Solder Joint Fittings for Sovent Drainage Systems	Table 703
ANSI B16.43-1982, Wrought Copper and Copper Alloy Solder Joint Fittings for Sovent Drainage Systems	Table 703
ANSI B31.1-55, Code for Pressure Piping	621.D
ANSI Z4.1-1986 (R2005)*, Sanitation in Places of Employment, Minimum Requirement for	405.C, Table 411 - Footnote 13
ANSI Z21.10.1-2009, Gas Water Heaters, Volume 1, Storage Water Heaters with Input Ratings of 75,000 Btu per Hour or Less (same as CSA 4.1)	503.B
ANSI Z21.10.3-2011, Gas Water Heaters Volume III, Storage, with Input Ratings Above 75,000 Btu per Hour, circulating and instantaneous (same as CSA 4.3)	503.B
ANSI Z21.22-1999(R2008)*, Relief Valves for Hot Water Supply Systems (same as CSA 4.4M)	501.F.1, 511.A.2, 511.G
ANSI Z124.1.2-2005*, Plastic Bathtub and Shower Units	Table 407, Table 415.I
ANSI Z124.3-2005*, Plastic Lavatories	Table 407
ANSI Z124.4-2006*, Plastic Water Closet Bowls and Tanks	Table 407
ANSI Z535.1-2006 (R2011), American National Standard for Safety Colors	607.A
APSP 2-1999*, Public Spas	Table 415.K
APSP 3-1999*, Permanently Installed Residential Spas	Table 415.K
APSP 6-1999*, Residential Portable Spas	Table 415.K
APSP 16-2011*, Standard Suction Fittings for Use in Swimming Pools, Wading Pools, Spas, and Hot Tubs (same as ASME A112.19.8)	415.K.2, 415.O.6
ARI 1010-2002, Drinking Fountains and Self-Contained, Mechanically-Refrigerated Drinking-Water Coolers	415.C.1
ASME Boiler and Pressure Vessel Code, Section IX, Welding and Brazing Qualifications, 1998 Edition	315.D
ASME A13.1-2007*, Scheme for the Identification of Piping Systems	607.A.1, 607.A.3, 607.B
ASME A112.1.2-2004*, Air Gaps in Plumbing Systems	415.C.1, 415.C.2, 609.A.1, Table 609, 609.C.7, 609.F.2
ASME A112.3.1-2007*, Stainless Steel Drainage Systems for Sanitary DWV, Storm, and Vacuum Applications, Above- and Below Ground	703.C.1, 703.D, Table 703
ASME A112.3.4-2000*, Macerating Toilet Systems and Related Components	Table 407, 729.C
ASME A112.4.1-2009, Water Heater Relief Valve Drain Tubes	Table 511
ASME A112.6.1M-1997 (R2002)*, Supports for Off-the-Floor Plumbing Fixtures for Public Use (Floor -Affixed)	Table 303
ASME A112.6.2-2000*, Framing-Affixed Supports for Off-the-Floor Water Closets with Concealed Tanks	Table 303
ASME A112.6.3-2001*, Floor Drains	Table 303
ASME A112.6.4-2003 (R2008)*, Roof, Deck, and Balcony Drains (dual roof drain assemblies wherein the inlets of both are enclosed in the same strainer are prohibited)	Table 303
ASME A112.14.1-2003 (R2008)*, Backwater Valves	705.G.2
ASME A112.14.3-2000 (R2004)*, Grease Interceptors	1005.N.1, 1005.N.5.a,

Standard Designation	Section/Table
	1005.N.6.a
ASME A112.18.1-2005*, Plumbing Fixture Fittings (same as CSA B125.1)	Table 407
ASME A112.18.2-2011, Plumbing Waste Fittings (Same as CSA B125.2	Table 407
ASME A112.18.3-2002*, Requirements for Backflow Protection Devices and Systems in Plumbing Fixture Fittings	Table 407, 609.C.7
ASME A112.18.6-2009, Flexible Water Connectors (same as CSA B125.6)	Table 407, 509.B
ASME A112.19.1-2008*, Enameled Cast Iron and Enameled Steel Plumbing Fixtures (same as CSA B45.2)	Table 407, 415.C.1
ASME A112.19.2-2008*, Ceramic Plumbing Fixtures (same as CSA B45.1)	Table 407, 415.C.1
ASME A112.19.3-2008*, Stainless Steel Plumbing Fixtures (same as CSA B45.4)	Table 407
ASME A112.19.4M-1994 (R2008)*, Porcelain Enameled Formed Plumbing Fixtures	Table 407
ASME A112.19.5-2011, Trim for Water-Closet Bowls, Tanks and Urinals (same as CSA B45.15)	Table 407
ASME A112.19.6-1995*, Hydraulic Performance Requirements for Water Closets & Urinals	Table 407
ASME A112.19.7-2012, Hydromassage Bathtub Systems (same as CSA B45.10)	415.O.4, 415.O.5
ASME A112.19.8-2007*, Suction Fittings for Use in Swimming Pools, Wading Pools, Spas, and Hot Tubs (same as APSP 16)	415.K.2, 415.O.6
ASME A112.19.9M-1991 (R2002)*, Non-vitreous Ceramic Plumbing Fixtures	Table 407
ASME A112.19.19-2006, Vitreous China Nonwater Urinals	Table 407
ASME A112.36.2M-1991 (R2002)*, Cleanouts	Table 303
ASME B1.20.1-1983 (R2006)*, Pipe Threads, General Purpose (Inch)	313.B
ASME B16.3-2011, Malleable Iron Threaded Fittings, Classes 150 and 300	Table 603
ASME B16.4-2011, Gray Iron Threaded Fittings, Classes 125 and 250	Table 603
ASME B16.5-2009, Pipe Flanges and Flanged Fittings	Table 603
ASME B16.12-2009, Cast-Iron Threaded Drainage Fittings	Table 703
ASME B16.15-2011, Cast Bronze Threaded Fittings, Classes 125 and 250	Table 603
ASME B16.18-2001, Cast Copper Alloy Solder Joint Pressure Fittings	Table 603
ASME B16.22-2001*, Wrought Copper and Copper Alloy Solder Joint Pressure Fittings	Table 603
ASME B16.23-2011, Cast Copper Alloy Solder Joint Drainage Fittings-DWV	Table 703
ASME B16.24-2011, Cast Copper Alloy Pipe Flanges: Class 150. 300, 400, 600, 900, 1500, and 2500	Table 603
ASME B16.26-2006*, Cast Copper Alloy Fittings for Flared Copper Tubes	Table 603
ASME B 16.29-2007*, Wrought Copper and Wrought Copper Alloy Solder Joint Drainage Fittings-DWV	Table 703
ASME B16.34-2009, Valves-Flanged Threaded, and Welding End	Table 603
ASME B16.45-1998 (R2006)*, Cast Iron Fittings for Sovent Drainage Systems	1811.E.3
ASSE 1001-2008*, Performance Requirements for Atmospheric-Type Vacuum Breakers	Table 609
ASSE 1002-2008*, Anti-Siphon Fill Valves for Water Closet Tanks	Table 609
ASSE 1003-2009*, Performance Requirements for Water Pressure Reducing Valves for Domestic Water Distribution Systems	611.J.1, 611.J.6
ASSE 1010-2004*, Performance Requirements for Water Hammer Arresters	Table 407, 611.I.1
ASSE 1011-2004*, Performance Requirements for Hose Connection Vacuum Breakers	Table 609

Standard Designation	Section/Table
ASSE 1012-2009*, Performance Requirements for Backflow Preventers with Intermediate Atmospheric Vent	Table 609, 609.C.5
ASSE 1013-2011*, Performance Requirements for Reduced Pressure Principle Backflow Preventers and Reduced Pressure Principle Fire Protection Backflow Preventers	Table 609, 609.C.5
ASSE 1014-2005, Performance Requirements for Backflow Prevention Devices for Hand Held Showers	Table 303
ASSE 1015-2011*, Performance Requirements for Double Check Backflow Prevention Assemblies and Double Check Fire Protection Backflow Prevention Assemblies	Table 609
ASSE 1016-2011*, Performance Requirements for Automatic Compensating Valves for Individual Showers and Tub/Shower Combinations	Table 623, 623.A.1, 623.A.2
ASSE 1017-2009*, Performance Requirements for Temperature Actuated Mixing Valves for Hot Water Distribution Systems	623.A, Table 623
ASSE 1018-2001*, Performance Requirements for Trap Seal Primer Valves - Potable Water Supplied	415.E.4.a, 625.D.1
ASSE 1019-2011*, Performance Requirements for Vacuum Breaker Wall Hydrants, Freeze Resistant, Automatic Draining	Table 303, Table 609
ASSE 1020-2004*, Pressure Vacuum Breaker Assembly	Table 609
ASSE 1022-2003*, Backflow Preventers for Beverage Dispensing Equipment	Table 609
ASSE 1035-2008*, Performance Requirements for Laboratory Faucet Backflow Preventers	Table 303, Table 609
ASSE 1037-1990, Performance Requirements for Pressurized Flushing Devices (Flushometers) for Plumbing Fixtures	Table 303
ASSE 1043-1992, Performance Standard for Cast Iron Sovent Sanitary Drainage Systems	1811.E.3
ASSE 1044-2001*, Performance Requirements for Trap Seal Primer Devices, Drainage Types and Electronic Types	415.E.4
ASSE 1047-2011*, Performance Requirements for Reduced Pressure Detector Fire Protection Backflow Prevention Assemblies	Table 609
ASSE 1048-2011*, Performance Requirements for Double Check Detector Fire Protection Backflow Prevention Assemblies	Table 609
ASSE 1052-2004*, Performance Requirements for Hose Connection Backflow Preventers	Table 609
ASSE 1056-2001*, Performance Requirements for Spill Resistant Vacuum Breakers	Table 609
ASSE 1061-2011*, Performance Requirements for Push-Fit Fittings (for use on PEX tubing complying with ASTM F 876 or F877, type K and L hard drawn and annealed copper tubing complying with ASTM B 88, and CPVC tubing complying with ASTM D 2846)	Table 603
ASSE 1069-2005*, Performance Requirements for Automatic Temperature Control Mixing Valves	Table 623, 623.A.1
ASSE 1070-2004*, Performance Requirements for Water Temperature Limiting Devices	Table 623, 623.B, 623.C
ASSE 1072-2007, Performance Requirements for Barrier Type Floor Drain Trap Seal Protection Devices	415.E.4
ASSE Series 5000-2009*, Cross-Connection Control Professional Qualifications Standard	319.F, Table 609, 609.F
ASSE 5110-2009, Backflow Prevention Assembly Tester Professional Qualifications Standard (part of ASSE Series 5000, Cross-Connection Control Professional Qualifications Standard)	609.F.9
ASSE 5120-2009, Backflow Prevention Assembly Surveyor Professional Qualifications Standard (part of ASSE Series 5000, Cross-Connection Control Professional Qualifications Standard)	607.C
ASSE 5130-2009, Backflow Prevention Assembly Repairer (part of ASSE Series 5000, Cross-	609.F.9

Standard Designation	Section/Table
Connection Control Professional Qualifications Standard)	
ASTM A48/A48M-2003 (R2008), Standard Specification for Gray Iron Castings	Table 703, 717.G
ASTM A53/A53M-2012, Standard Specification for Pipe, Steel, Black and Hot-Dipped, Zinc-Coated Welded and Seamless	Table 603
ASTM A74-2009, Standard Specification for Cast Iron Soil Pipe and Fittings	303.G.6.a, Table 703
ASTM A126-2004 (R2009), Standard Specification for Gray Iron Castings for Valves, Flanges, and Pipe Fittings	Table 603, Table 619.D
ASTM A197/A197M-2000 (R2011), Standard Specification for Cupola Malleable Iron	Table 603
ASTM A2692010, Standard Specification for Seamless and Welded Austenitic Stainless Steel Tubing for General Service	Table 603
ASTM A312/A312M-2012, Standard Specification for Seamless, Welded, and Heavily Cold Worked Austenitic Stainless Steel Pipes	Table 603
ASTM A377-2003 (R2008)e1, Standard Index of Specifications for Ductile-Iron Pressure Pipe	Table 603
ASTM A518/A518M-1999 (R2008), Standard Specification for Corrosion-Resistant High-Silicon Iron Castings	Table 703, 703.F
ASTM A653/ A653M-2011, Standard Specification for Steel Sheet, Zinc-Coated (Galvanized) or Zinc-Iron Alloy-Coated (Galvannealed) by the Hot-Dip Process	Table 303
ASTM A733-2003 (R2009)e1, Standard Specification for Welded and Seamless Carbon Steel and Austenitic Stainless Steel Pipe Nipples	Table 603
ASTM A746-2009, Standard Specification for Ductile Iron Gravity Sewer Pipe	Table 703
ASTM A778-2001 (R2009)e1, Standard Specification for Welded, Unannealed Austenitic Stainless Steel Tubular Products	Table 603
ASTM A865/A865M-2006, Standard Specification for Threaded Couplings, Steel, Black and Zinc-Coated (Galvanized) Welded and Seamless, for Use in Steel Pipe Joints	Table 603
ASTM A888-2011, Standard Specification for Hubless Cast Iron Soil Pipe and Fittings for Sanitary and Storm Drain, Waste, and Vent Piping Applications	Table 703
ASTM B32-2008, Standard Specification for Solder Metal	Table 303
ASTM B42-2010, Standard Specification for Seamless Copper Pipe, Standard Sizes	Table 603
ASTM B43-2009, Standard Specification for Seamless Red Brass Pipe, Standard Sizes	Table 603
ASTM B75/B75M-2011, Standard Specification for Seamless Copper Tube	Table 603
ASTM B88-2009, Standard Specification for Seamless Copper Water Tube	513.F.1, Table 603, 613.A.1, 619.A.2, 619.B
ASTM B135-2008a, Standard Specification for Seamless Brass Tube	Table 603
ASTM B135-2010, Standard Specification for Seamless Brass Tube	Table 603
ASTM B152/B152M-2009, Standard Specification for Copper Sheet, Strip, Plate and Rolled Bar	Table 303
ASTM B248-2007, Standard Specification for General Requirements for Wrought Copper and Copper- Alloy Plate, Sheet, Strip, and Rolled Bar	Table 303
ASTM B248M-2007, Standard Specification for General Requirements for Wrought Copper and Copper- Alloy Plate, Sheet, Strip, and Rolled Bar Metric	Table 303
ASTM B251-2010, Standard Specification for General Requirements for Wrought Seamless Copper and Copper-Alloy Tube	Table 603
ASTM B251M-2010, Standard Specification for General Requirements for Wrought Seamless	Table 603

Standard Designation	Section/Table
Copper and Copper-Alloy Tube Metric	
ASTM B302-2007, Standard Specification for Threadless Copper Pipe, Standard Sizes	Table 603
ASTM B306-2009, Standard Specification for Copper Drainage Tube (DWV)	Table 703
ASTM B447-2007, Standard Specification for Welded Copper Tube	Table 603
ASTM B543-2007e1, Standard Specification for Welded Copper and Copper-Alloy Heat Exchanger Tube	Table 703
ASTM B587-2008, Standard Specification for Welded Brass Tube	Table 603
ASTM B687-1999 (R2011), Standard Specification for Brass, Copper, and Chromium-Plated Pipe Nipples	Table 603
ASTM B813-2010, Standard Specification for Liquid and Paste Fluxes for Soldering Applications for Copper and Copper Tube	Table 303
ASTM B828-2002 (R2010), Standard Practice for Making Capillary Joints by Soldering of Copper and Copper Alloy Tube and Fittings	Table 303
ASTM C4-2004 (R2009), Standard Specification for Clay Drain Tile and Perforated Clay Drain Tile	Table 703
ASTM C14-2011, Standard Specification for Non-Reinforced Concrete Sewer, Storm Drain, and Culvert Pipe *(Approved for storm drain use only)*	Table 703
ASTM C76-2011, Standard Specification for Reinforced Concrete Culvert, Storm Drain, and Sewer Pipe *(Approved for storm drain use only)*	Table 703
ASTM C76M-2011, Standard Specification for Reinforced Concrete Culvert, Storm Drain, and Sewer Pipe-Metric *(Approved for storm drain use only)*	Table 703
ASTM C361-2011, Standard Specification for Reinforced Concrete Low-Head Pressure Pipe *(Approved for storm drain use only)*	Table 703
ASTM C361M-2008, Standard Specification for Reinforced Concrete Low-Head Pressure Pipe-Metric *(Approved for storm drain use only*	Table 703
ASTM C412-2011, Standard Specification for Concrete Drain Tile	Table 703
ASTM C412M-2011, Standard Specification for Concrete Drain Tile Metric	Table 703
ASTM C425-2004 (R2009), Standard Specification for Compression Joints for Vitrified Clay Pipe and Fittings	Table 703, 313.E
ASTM C443-2011, Standard Specification for Joints for Concrete Pipe and Manholes, Using Rubber Gaskets	Table 303
ASTM C443M-2011, Standard Specification for Joints for Concrete Pipe and Manholes, Using Rubber Gaskets Metric	Table 303
ASTM C444-2003 (R2009), Standard Specification for Perforated Concrete Pipe	Table 703
ASTM C444M-2003(2009), Standard Specification for Perforated Concrete Pipe Metric	Table 703
ASTM C478-2012, Standard Specification for Precast Reinforced Concrete Manhole Sections	Table 703, 717.G
ASTM C478M-2011, Standard Specification for Precast Reinforced Concrete Manhole Sections Metric	Table 703, 710.7
ASTM C564-2011, Standard Specification for Rubber Gaskets for Cast Iron Soil Pipe and Fittings	Table 303, 709.D.3
ASTM C700-2011, Standard Specification for Vitrified Clay Pipe, Extra Strength, Standard Strength, and Perforated	Table 703
ASTM C1053-2000 (R2010), Standard Specification for Borosilicate Glass Pipe and Fittings for Drain, Waste, and Vent (DWV) Applications	Table 703, 703.F
ASTM C1173-2010e1, Standard Specification for Flexible Transition Couplings for Underground Piping Systems	Table 303
ASTM C1277-2011, Standard Specification for	Table 303

Standard Designation	Section/Table
Shielded Couplings Joining Hubless Cast Iron Soil Pipe and Fittings	
ASTM D395-2003 (R2008), Standard Test Methods for Rubber Property-Compression Set. See 711.D	Table 303
ASTM D412-2006ae2, Standard Test Methods for Vulcanized Rubber and Thermoplastic Elastomers-Tension. See 711.D	Table 303
ASTM D788-2011, Standard Specification for Poly (Methyl Methacrylate) (PMMA) Molding and Extrusion Compounds	Table 303
ASTM D 789-2007e1, Standard Test Methods for Determination of Solution Viscosities of Polyamide (PA)	Table 303
ASTM D1527-99 (R2005), Standard Specification for Acrylonitrile- Butadiene-Styrene(ABS) Plastic Pipe, Schedules 40 and 80	Table 603
ASTM D1785-2006, Standard Specification for Poly (Vinyl Chloride) (PVC) Plastic Pipe, Schedules 40, 80, and 120	Table 603
ASTM D1869-1995 (R2010), Standard Specification for Rubber Rings for Asbestos-Cement Pipe	Table 303
ASTM D2235-2004 (R2011), Standard Specification for Solvent Cement for Acrylonitrile-Butadiene-Styrene (ABS) Plastic Pipe and Fittings. Listed	Table 303
ASTM D2239-2012, Standard Specification for Polyethylene (PE) Plastic Pipe (SIDR-PR) Based on Controlled Inside Diameter	Table 603
ASTM D2241-2009, Standard Specification for Poly (Vinyl Chloride) (PVC) Pressure-Rated Pipe (SDR-Series). Listed	Table 603
ASTM D2321-2011, Standard Practice for Underground Installation of Thermoplastic Pipe for Sewers and Other Gravity-Flow Applications	Table 303, Table 703
ASTM D2466-2006, Standard Specification for Poly (Vinyl Chloride) (PVC) Plastic Pipe Fittings Schedule 40	Table 603
ASTM D2467-2006, Standard Specification for Poly (Vinyl Chloride) (PVC) Plastic Pipe Fittings, Schedule 80. Listed	Table 603
ASTM D 2564-2004 (R2009)e1*, Standard Specification for Solvent Cements for Poly(Vinyl Chloride)(PVC) Plastic Piping Systems. Listed	Table 303
ASTM D2657-2007, Standard Practice for Heat Fusion Joining of Polyolefin Pipe and Fittings	Table 303
ASTM D2661-2011, Standard Specification for Acrylonitrile Butadiene-Styrene (ABS) Plastic Drain, Waste and Vent Pipe and Fittings. Listed	Table 703
ASTM D2665-2011, Standard Specification for Poly (Vinyl Chloride) (PVC) Plastic Drain, Waste, and Vent Pipe and Fittings. Listed	Table 703
ASTM D2672-1996a (2009)*, Standard Specification for Joints for IPS PVC Pipe Using Solvent Cement	Table 603
ASTM D2737-2012e1, Standard Specification for Polyethylene (PE) Plastic Tubing. Listed	Table 603
ASTM D2751-2005, Standard Specification for Acrylonitrile- Butadiene-Styrene (ABS) Sewer Pipe and Fittings	Table 703
ASTM D2774-2012, Standard Practice for Underground Installation of Thermoplastic Pressure Piping	Table 303
ASTM D2846/D2846M-2009be1, Standard Specification for Chlorinated Poly(Vinyl Chloride)(CPVC) Plastic Hot-and Cold-Water Distribution Systems. Listed	Table 603
ASTM D 2855-1996 (R2010), Standard Practice for Making Solvent-Cemented Joints with Poly (Vinyl Chloride)(PVC) Plastic Pipe and Fittings	Table 303
ASTM D3034-2008, Standard Specification for Type PSM Poly (Vinyl Chloride) (PVC) Sewer Pipe and Fittings	Table 703

Standard Designation	Section/Table
ASTM D-3138-04(2011), Standard Specification for Solvent Cements for Transition Joints Between Acrylonitrile-Butadiene-Styrene (ABS) and Poly(Vinyl Chloride) (PVC) Non-Pressure Piping Components	Table 303, 711.D.4 Note: This is not an all-purpose cement. Only to be utilized for joining an ABS building drain to a PVC building sewer.
ASTM D3139-1998 (R2011), Standard Specification for Joints for Plastic Pressure Pipes Using Flexible Elastomeric Seals. See 313.H.2	Table 603
ASTM D3212-2007*, Standard Specification for Joints for Drain and Sewer Plastic Pipes Using Flexible Elastomeric Seals	Table 703
ASTM D4068-2009, Standard Specification for Chlorinated Polyethylene (CPE) Sheeting for Concealed Water-Containment Membrane	303.G.7, Table 415.I
ASTM D4551-1996 (2008)e1*, Standard Specification for Poly (Vinyl Chloride) (PVC) Plastic Flexible Concealed Water-Containment Membrane	303.G.7, Table 415.I
ASTM D4894-2007, Standard Specification for Polytetrafluoroethylene (PTFE) Granular Molding and Ram Extrusion Materials	Table 303
ASTM D4895-2010, Standard Specification for Polytetrafluoroethylene (PTFE) Resin Produced From Dispersion	Table 303
ASTM F402-2005 (R2012), Standard Practice for Safe Handling of Solvent Cements, Primers, and Cleaners Used for Joining Thermoplastic Pipe and Fittings	Table 303
ASTM F409-2002 (R2008), Standard Specification for Thermoplastic Accessible and Replaceable Plastic Tube and Tubular Fittings	Table 703
ASTM F437-2009, Standard Specification for Threaded Chlorinated Poly (Vinyl Chloride) (CPVC) Plastic Pipe Fittings, Schedule 80. Listed	Table 603
ASTM F438-2009, Standard Specification for Socket-Type Chlorinated Poly(Vinyl Chloride) (CPVC) Plastic Pipe Fittings, Schedule 40	Table 603
ASTM F439-2011, Standard Specification for Chlorinated Poly (Vinyl Chloride) (CPVC) Plastic Pipe Fittings, Schedule 80. Listed	Table 603
ASTM F441/F 441M-2009, Standard Specification for Chlorinated Poly (Vinyl Chloride) (CPVC) Plastic Pipe, Schedules 40 and 80. Listed	Table 603
ASTM F442/F 442M-2009, Standard Specification for Chlorinated Poly (Vinyl Chloride) (CPVC) Plastic Pipe (SDR-PR)	Table 603
ASTM F493-2010, Standard Specification for Solvent Cements for Chlorinated Poly(Vinyl Chloride)(CPVC) Plastic Pipe and Fittings	Table 303
ASTM F628-2008, Standard Specification for Acrylonitrile- Butadiene-Styrene (ABS) Schedule 40 Plastic Drain, Waste, and Vent Pipe with a Cellular Core. Listed.	Table 703
ASTM F 656-2010*, Standard Specification for Primers for Use in Solvent Cement Joints of Poly(Vinyl Chloride) (PVC) Plastic Pipe and Fittings	Table 303
ASTM F876-2010e1, Standard Specification for Crosslinked Polyethylene (PEX) Tubing	Table 603
ASTM F877-2011a, Standard Specification for Crosslinked Polyethylene (PEX) Plastic Hot and Cold-Water Distribution Systems, Listed	Table 603
ASTM F891-2010, Standard Specification for Coextruded Poly(Vinyl Chloride)(PVC) Plastic Pipe with a Cellular Core	Table 703
ASTM F1281-2011, Standard Specification for Crosslinked Polyethylene/Aluminum/Crosslinked Polyethylene (PEX-AL-PEX) Pressure Pipe	Table 603
ASTM F1282-2010, Standard Specification for Polyethylene/ Aluminum/Polyethylene (PE-AL-PE) Composite Pressure Pipe	Table 603

Standard Designation	Section/Table
ASTM F1290-1998a (R2011), Standard Practice for Electro fusion Joining Polyolefin Pipe and Fittings	Table 303, 621.E.2
ASTM F1412-2009, Standard Specification for Polyolefin Pipe and Fittings for Corrosive Waste Drainage Systems	Table 703, 703.F, 709.C
ASTM F1488-2009e1, Standard Specification for Coextruded Composite Pipe	Table 703
ASTM F1499-2012, Standard Specification for Coextruded Composite Drain, Waste, and Vent Pipe (DWV)	Table 703
ASTM F1673-2010, Standard Specification for Polyvinylidene Fluoride (PVDF) Corrosive Waste Drainage Systems	Table 703, 703.F
ASTM F1807-2011ae1, Standard Specification for Metal Insert Fittings Utilizing a Copper Crimp Ring for SDR9 Cross-linked Polyethylene (PEX) Tubing	Table 603
ASTM F1960-2011e1, Standard Specification for Cold Expansion Fittings with PEX Reinforcing Rings for Use with Cross-linked Polyethylene (PEX) Tubing	Table 603
ASTM F2159-2011, Standard Specification for Plastic Insert Fittings Utilizing a Copper Crimp Ring for SDR9 Cross-linked Polyethylene (PEX) Tubing	Table 603
ASTM F2080-2009, Standard Specification for Cold-Expansion Fittings With Metal Compression-Sleeves for Cross-Linked Polyethylene (PEX) Pipe	Table 603
ASTM F2098-2008, Standard Specification for Stainless Steel Clamps for Securing SDR9 Cross-linked Polyethylene (PEX) Tubing to Metal Insert and Plastic Insert Fittings	Table 603
ASTM F2389-2010, Standard Specification for Pressure-rated Polypropylene (PP) Piping Systems	Table 603, 619.B
ASTM F2618-2009, Standard Specification for Chlorinated Poly (Vinyl Chloride) (CPVC) Pipe and Fittings for Chemical Waste Drainage Systems	Table 703, 703.F
ASTM F2620-2011e1, Standard Practice for Heat Fusion Joining of Polyethylene Pipe and Fittings	Table 303, 621.E
AWS B2.2/B2.2M:2010, Specification for Brazing Procedure and Performance Qualification	315.D
AWS A5.8/A5.8M-2011, Spec. for Filler Metals for Brazing and Braze Welding	Table 303
AWS A5.9/5.9M-2006*, Specification for Bare Stainless Steel Welding Electrodes and Rods	Table 303, 621.G
AWWA C104-2008*, Cement-Mortar Lining for Ductile-Iron Pipe and Fittings for Water (same as ANSI A21.4)	Table 303
AWWA C110-2008 (R2012)*, Ductile-Iron and Gray-Iron Fittings (same as ANSI A21.10)	Table 603
AWWA C111-2006*, Rubber Gasket Joints for Ductile-Iron and Gray-Iron Pressure Pipe and Fittings (same as ANSI A21.11)	709.G
AWWA C151-2009*, Ductile-Iron Pipe, Centrifugally Cast (same as ANSI A21.51)	Table 603
AWWA C153-2006*, Ductile-Iron Compact Fittings for Water Service (same as ANSI A21.53)	Table 603
AWWA C203-2009*, Coal-Tar Protective Coatings and Linings for Steel Water Pipelines-Enamel and Tape-Hot-Applied	Table 303
AWWA C509-2009*, Resilient-Seated Gate Valves for Water Service Supply	Table 619.D
AWWA C510-2007*, Double Check Valve Backflow Prevention Assembly	Table 609
AWWA C511-2007*, Reduced Pressure Principle Backflow Prevention Assembly	Table 609
AWWA C606-2011*, Grooved and Shouldered Joints	Table 303
AWWA C900-2007*, Polyvinyl Chloride (PVC) Pressure Pipe and Fabricated Fittings, 4 In. Through 12 In. (100 mm Through 300 mm), for Water Transmission and Distribution	Table 603

Standard Designation	Section/Table
CAN/CSA-B64.10-94, Manual for the Selection, Installation, Maintenance, and Field Testing of Backflow Prevention Devices	Table 609, Table 609.F.5 - Footnote 1, Table 609.F.6 - Footnotes 2 & 3
CAN/CSA-B137.2-2009, PVC Injection-Molded Gasketed Fittings for Pressure Applications. Listed	Table 603
CAN/CSA-B 137.5-2009, Cross-Linked Polyethylene (PEX) Tubing Systems for Pressure Applications. Listed	Table 603
CAN/CSA-B181.1-2006, ABS Drain, Waste, and Vent Pipe and Pipe Fittings	705.G.2
CAN/CSA-B 181.2-2006, PVC Drain, Waste, and Vent Pipe and Pipe Fittings	705.G.2
CAN/CSA-B-182.4-2006, Profile PVC Sewer Pipe and Fittings	Table 703
CDA Copper Sovent Single Stack Plumbing System Design Handbook No. 402/0 *(For informational purposes only since is alternate designed plumbing governed under Chapter 12 requirements)*	1811.E.3
CDA Copper Tube Handbook *(For informational purposes only)*	Table 1805.F
CISPI HS 74-86, Standard Specification for Cast Iron Soil Pipe and Fittings for Hub and Spigot Sanitary and Storm Drain, Waste and Vent Piping Applications	Table 703
CISPI HSN 85, Standard Specification for Neoprene Rubber Gaskets for Hub and Spigot Cast Iron Soil Pipe and Fittings	Table 303
CISPI 301-09, Standard Specification for Hubless Cast Iron Soil Pipe and Fittings for Sanitary and Storm Drain, Waste, and Vent Piping Applications	Table 703
CISPI 310-11, Standard Specification for Coupling for use in connection with Hubless Cast Iron Soil Pipe and Fittings for Sanitary and Storm Drain, Waste, and Vent Piping Applications	Table 303, Table 703, 709.E.3
CSA 4.1-2009, Gas Water Heaters, Volume 1, Storage Water Heaters with Input Ratings of 75,000 Btu per Hour or Less (same as ANSI Z21.10.1)	503.B
CSA 4.3-2011, Gas Water Heaters Volume III, Storage, with Input Ratings Above 75,000 Btu per Hour, circulating and instantaneous (same as ANSI Z21.10.3)	503.B
CSA 4.4M-1999(R2008)*, Relief Valves for Hot Water Supply Systems (same as ANSI Z21.22)	501.F.1, 511.A.2, 511.G
CSA B45.1-2008, Ceramic Plumbing Fixtures (same as ASME A112.19.2)	Table 407, 415.C.1
CSA B45.2-2008, Enameled Cast Iron and Enameled Steel Plumbing Fixtures (same as ASME A112.19.1)	Table 407, 415.C.1
CSA B45.4-2008, Stainless Steel Plumbing Fixtures (same as ASME A112.19.3)	Table 407
CSA B45.10-2012, Hydromassage Bathtub Systems (same as ASME A112.19.7)	415.O.4, 415.O.5
CSA B45.15-2011, Trim for Water-Closet Bowls, Tanks and Urinals (same as ASME A112.19.5)	Table 407
CSA B125.1-2005, Plumbing Supply Fittings (same as ASME A112.18.1)	Table 407
CSA B125.2-2011, Plumbing Waste Fittings (same as ASME A112.18.2)	Table 407
CSA B125.6-2009, Flexible Water Connectors (same as ASME A112.18.6)	Table 407, 509.B
FMRC 1680-89, Couplings Used In Hubless Cast Iron Systems for Drain, Waste or Vent, Sewer, Rainwater or Storm Drain Systems Above and Below Ground, Industrial/Commercial and Residential	Table 303
FS QQ-L-156 (1946), Caulking Lead	Table 407
FS QQ-L-201 F(2) (1965) (R1970), Lead Sheet, [AMD 02 (1970)]	Table 303
FS SS-P-381, Concrete Pipe Pressure Reinforced-Pretention Reinforcement Steel	Table 703

Standard Designation	Section/Table
FS WW-P-325(44), Pipe, Bends, Traps, Caps, and Plugs; Lead (for Industrial Pressure, and Soil and Waste Applications)	Table 703
FS WW-P-541 E/GEN(1), (1980), Plumbing Fixtures (General Specifications), [AMD 01 (1990)]	Table 407
IAPMO Z124.5-2006, Plastic Toilet (Water Closet) Seats	Table 303
IAPMO Z124.6-2007, Plastic Sinks	Table 407
MSS SP-72-2010, Ball Valves with Flanged or Butt-Welding Ends for General Service	Table 609.D
MSS SP-80-2008, Bronze Gate, Globe, Angle and Check Valves	Table 609.D
MSS SP-110-2010, Ball Valves Threaded, Socket-Welding, Solder Joint, Grooved, and Flared Ends	Table 609.D
NFPA 70-2010 National Electrical Code	731.H.2, 1101.G.3
NFPA 99-2012, Health Care Facilities Code	1302, G105
NFPA1192-2008, Standard on Recreational Vehicles	1501.A, 1601.A
NSF 14-2011*, Plastic Piping System Components and Related Materials	303.H.5, 313.H.1
NSF 24-2010*, Plumbing System Components for Mobile Homes & Recreational Vehicles	Table 603
NSF 42-2010*, Drinking Water Treatment Units-Aesthetic Effects	Table 303, 627.A
NSF 50-2011*, Circulation System Components and Related Materials for Swimming Pools, Spas or Hot Tubs	415.K.1
NSF 53-2011*, Drinking Water Treatment Units-Health Effects	Table 303, 627.A
NSF 58-2006*, Reverse Osmosis Drinking Table Water Treatment Units	Table 303, 627.B
NSF 61-2011*, Drinking Water System Components-Health Effects	303.F, 335.C, 415.C.1
NSF/ANSI 372-2010*, Drinking Water System Components-Lead Content	303.F, 613.A, 619.A.3
PDI-G101-2010, Testing and Rating Procedure for Grease Interceptors with Appendix of Sizing and Installation Data	1005.N.1, 1005.N.5.a, 1005.N.6.a
PDI-WH201-2006, Water Hammer Arresters	611.I.1
SBCCI Standard Building Code, 1994 Edition	203,
UFL's TREEO's *"Backflow Prevention - Theory and Practice"*, 2nd Edition, 2004	319.F
UL 174-2004, Household Electric Storage Tank Water Heaters	503.A
USC's FCCC&HR's *"Manual of Cross-Connection Control"*, Tenth Edition, 2009	319.F

**ANSI designated as an American National Standard*

AUTHORITY NOTE: Promulgated in accordance with R.S. 40:4(A)(7) and R.S. 40:5(2)(3)(7)(9)(16)(17)(20).

HISTORICAL NOTE: Promulgated by the Department of Health and Hospitals, Office of Public Health, LR 38:

§1405. Organizations

A. The following is a list by name and address of those agencies, associations, institutes and others that are referred to in this Part by name, initials or symbols. Further there are those listed, for convenience, whose technical and other services are made available to this Part.

AGA	American Gas Association, Inc. 400 North Capitol Street, NW, Suite 450 Washington, D.C. 20001 Tel. (202)824-7000 www.aga.org
AHRI	Air-Conditioning, Heating, and Refrigeration Institute 2111 Wilson Boulevard, Suite 500 Arlington, Virginia 22201 Tel. (703) 524-8800 Fax (703) 562-1942 www.ahrinet.org
ANSI	American National Standards Institute, Inc. 25 West 43rd Street, 4th Floor New York, New York 10036 Tel. (212) 642-4900 Fax (212) 398-0023 www.ansi.org
ARI	Air Conditioning & Refrigeration Institute (effective January 1, 2008, now AHRI)
APSP	Association of Pool & Spa Professionals (formerly National Spa and Pool Institute) 2111 Eisenhower Avenue, Suite 500 Alexandria, Virginia 22314-4695 Tel. (703) 838-0083 Fax (703) 549-0493 www.apsp.org
ASME	American Society of Mechanical Engineers Information Central - Orders/Inquiries P.O. Box 2300 Fairfield, New Jersey 07007-2300 Tel. (800) 843-2763 www.asme.org
ASSE	American Society of Sanitary Engineering 901 Canterbury, Suite A Westlake, Ohio 44145 Tel. (440) 835-3040 Fax (440) 835-3488 www.asse-plumbing.org
ASTM International	American Society for Testing and Materials International 100 Barr Harbor Drive West Conshohocken, Pennsylvania 19428-2959 Tel. (610) 832-9500 Fax (610) 832-9555 www.astm.org
AWS	American Welding Society 550 N.W. LeJeune Road Miami, Florida 33126 Tel. (305) 443-9353 Tel. (800) 443-9353 Fax (305) 443-7559 www.aws.org
AWWA	American Water Works Association 6666 West Quincy Avenue Denver, Colorado 80235-3098 Tel. (303) 794-7711 Tel. (800) 926-7337 Fax (303) 347-0804
CDA	Copper Development Association, Inc. 260 Madison Ave. New York, New York, New York 10016 Tel. (212) 251-7200 Fax (212) 251-7234 www.copper.org
CISPI	Cast Iron Soil Pipe Institute 5959 Shallowford Road, Suite 419 Chattanooga, Tennessee 37421 Tel. (423) 892-0137 www.cispi.org
CAN/CSA	Canadian Standards Association 5060 Spectrum Way, Suite 100 Mississauga, Ontario Canada L4W 5N6 Tel. (416) 747-4000 Tel. (800) 463-6727 www.csa.ca
FMRC	Factory Mutual Research Corporation FM Approvals, LLC Approval Standards 1151 Boston-Providence Turnpike, P.O. Box 9102 Norwood, Massachusetts 02062-9102 Tel. (781) 762-4300 Fax (781) 762-9375 www.fmglobal.com

FS	Federal Specifications General Services Administration Federal Supply Service Specification Section 301 7th Street SW, Room 6628 Washington, D.C. 20407 Tel. (202) 619-8925 Fax (202) 619-8985 www.gsa.gov (go to "http://www.gsa.gov/portal/content/100847" for an index of Federal Specifications)
IAPMO	International Association of Plumbing and Mechanical Officials 5001 E. Philadelphia Street Ontario, California 91761-2816 Tel. (909) 472-4100 Fax (909) 472-4150 www.iapmo.org
MSS	Manufacturers Standardization Society of the Valve and Fittings Industry, Inc. 127 Park Street, N.E. Vienna, Virginia 22180-4602 Tel. (703) 281-6613 Fax (703) 281-6671 MSS-hq.org
NFiPA	National Fire Protection Association 1 Batterymarch Park Quincy, Massachusetts 02169-9101 Tel. (617) 770-3000 Tel. (800) 344-3555 Fax (800) 593-6372 www.nfpa.org
NSF	NSF International 789 N. Dixboro Road P.O. Box 130140 Ann Arbor, Michigan 48113-0140 Tel. (734) 769-8010 Tel. (800) 673-6275 Fax (734) 769-0109 www.nsf.org
PDI	Plumbing and Drainage Institute 800 Turnpike Street, Suite 300 North Andover, Massachusetts 01845 Tel. (800) 589-8956 Tel. (978) 557-0720 Fax (978) 557-0721 www.pdionline.org
PPFA	Plastic Pipe & Fittings Association 800 Roosevelt Road, Building C, Suite 312 Glen Ellyn, Illinois 60137-5833 Tel. (630) 858-6540 Fax (630) 790-3095 www.ppfahome.org
PPI	Plastics Pipe Institute A Division of the Plastics Industry, Inc. 105 Decker Court, Suite 825 Irving, Texas 75062 Tel. (469) 499-1044 Fax (469) 499-1063 www.plasticpipe.org (Note: *"more PE pipe focus"*)
UFL's TREEO	University of Florida Center for Training, Research and Education for Environmental Occupations 3900 SW 63 Blvd Gainesville, FL 32608 Tel. (352) 392-9570 x229 Fax (352) 392- www.treeo.ufl.edu/backflow
UL	Underwriters Laboratories, Inc.** 333 Pfingsten Road Northbrook, Illinois 60062-2096 Tel. (847) 272-8800 Fax (847) 272-8129 www.ul.com

**UL Standards available from:	
	IHS Global Engineering Documents 15 Inverness Way East Englewood, Colorado 80112-5776 Tel. (303) 397-7956 Tel. (800) 854-7179 Fax (303) 397-2740 www.global.ihs.com
USC's FCCC&HR	University of Southern California Foundation for Cross-Connection Control and Hydraulic Research Viterbi School of Engineering Kaprelian Hall 200 Los Angeles, CA 90089-2531 Tel. (866) 545-6340 Fax (213) 740-8399 www.usc.edu/fccchr

AUTHORITY NOTE: Promulgated in accordance with R.S. 40:4(A)(7) and R.S. 40:5(2)(3)(7)(9)(16)(17)(20).

HISTORICAL NOTE: Promulgated by the Department of Health and Hospitals, Office of Public Health, LR 38:

Chapter 15. Travel Trailers and Travel Trailer Parks [formerly Appendix B - Travel Trailers and Travel Trailer Parks]

§1501. General

A. With the exception of §1523, the requirements set forth in this Chapter shall apply specifically to all new travel trailer parks, and to additions to existing parks as herein defined, and are to provide minimum standards for sanitation and plumbing installation within these parks, for the accommodations, use and parking of travel trailers. Plumbing installations within travel trailers shall be installed in accordance with NFPA 1192.

AUTHORITY NOTE: Promulgated in accordance with R.S. 40:4(A)(7) and R.S. 40:5(2)(3)(7)(9)(16)(17)(20).

HISTORICAL NOTE: Promulgated by the Department of Health and Hospitals, Office of Public Health, LR 38:

§1503. Definitions

A. Definitions contained in Chapter 2 shall also apply to this Chapter except where the following special definitions shall apply.

Air Lock—a condition where air is trapped in a *drain* or *drain hose* and retards or stops the flow of *liquid waste* or *sewage*.

Center—the longitudinal center line located midway between the right and the left side of a *mobile/manufactured home* or *travel trailer*.

Combination Compartment—a shower stall with or without a door which provides for or includes a water closet. It is sized for occupancy of only one person.

Department Having Jurisdiction—the administrative authority/authorities or other law enforcement agency/agencies having jurisdiction over this Code.

Dependent Travel Trailer—a travel trailer not equipped with a water closet.

Drain Hose—the approved type hose, flexible and easily detachable, used for connecting the *drain outlet* on a *travel trailer* to a *sewer inlet* connection.

Drain Outlet—the lowest end of the main drain of a travel trailer itself to which a *drain hose* is connected.

Independent Mobile/Manufactured Home or Travel Trailer—a mobile/manufactured home or travel trailer equipped with a water closet and a bath or shower.

Inlet Coupling—the terminal end of the branch water line to which the *mobile/manufactured home* or *travel*

trailer's water service connection is made. It may be a swivel fitting or threaded pipe end.

Intermediate Waste Holding Tank—(*travel trailers* only) an enclosed tank for the temporary retention of water-borne waste.

Length—the distance measured from the tip of the hitch to the part farthest to the rear of a *mobile/manufactured home* or *travel trailer*.

Park or Mobile/Manufactured Home Park or Travel Trailer Park—any lot, tract, parcel or plot of land upon which more than one *travel trailer* and/or *mobile/manufactured home*s parked for the temporary or permanent use of a *person* or *persons* for living, working or congregating.

Park Drainage System—the entire system of drainage piping within the *park* which is used to convey *sewage* or other *wastes* from the *mobile/manufactured home* or *travel trailer drain outlet* connection, beginning at its *sewer inlet* connection at the *mobile/manufactured home* or *travel trailer* site, to a *community sewerage system*, a *commercial treatment facility*, or an *individual sewerage system*.

Park Water Distribution System—all of the water distribution piping within the *park*, extending from the water supply system or other source of supply to, but not including, the *mobile/manufactured home* or *travel trailer's* water service connection, and including branch service lines, *fixture* devices, service buildings and appurtenances thereto.

Service Building—a building housing toilet and bathing facilities for men and women, with laundry facilities.

Sewer Inlet—a sewer pipe connection permanently provided at the *travel trailer* or *mobile/manufactured home* site which is designed to receive *sewage* when a *travel trailer* or a *mobile/manufactured home* is parked on such site. It is considered the upstream terminus of the *park drainage system*.

Sewer Lateral—that portion of the park drainage system extending from the main to the sewer inlet connection at a mobile/manufactured home or travel trailer site.

Trailer Trap—a device, fitting or assembly of fittings installed in the *sewer lateral* for a *travel trailer* or *mobile/manufactured home* which is used to prevent the circulation of air between the *park drainage system* and the drainage system of the individual *travel trailer* or *mobile/manufactured home*.

Travel Trailer—a vehicular unit, mounted on wheels, designed to provide temporary living quarters for recreational, camping, or travel use, of such size or weight as not to require special highway movement permits when towed by a motorized vehicle, and of gross trailer area less than 320 square feet.

Travel Trailer Sanitary Service Station—a sewage inlet with cover, surrounded by a concrete apron sloped inward to the *drain*, and watering facilities to permit periodic washdown of the immediately adjacent area, to be used as a disposal point for the contents of *intermediate waste holding tanks* of *travel trailers*.

Water Service Connection—as used in conjunction with mobile/manufactured homes and travel trailers, the water pipe connected between the inlet coupling of the park water distribution system and the water supply fitting provided on the mobile/manufactured home or travel trailer itself.

AUTHORITY NOTE: Promulgated in accordance with R.S. 40:4(A)(7) and R.S. 40:5(2)(3)(7)(9)(16)(17)(20).

HISTORICAL NOTE: Promulgated by the Department of Health and Hospitals, Office of Public Health, LR 38:

§1505. General Regulations

A. Governing Provisions. Other general provisions of this code shall govern the installation of plumbing systems in travel trailer parks, except where special conditions or construction are specifically defined in this Chapter.

B. Travel Trailer Sites. Travel trailers shall comply with the following when parked in a travel trailer park.

1. Travel trailers shall not hereafter be parked in any travel trailer park unless there are provided plumbing and sanitation facilities installed and maintained in conformity with these regulations. Every travel trailer shall provide a gastight and watertight connection for sewage disposal which shall be connected to an underground sewage collection system discharging into a community sewerage system, a commercial treatment facility, or an individual sewerage system which has been approved by the state health officer.

2. No dependent travel trailer shall be parked at any time in a space designed and designated for an independent travel trailer unless public toilet and bath facilities are available within 200 ft (61 m) of the dependent travel trailer.

C. Travel Trailer Sanitary Service Station. At least one travel trailer sanitary service station shall be provided in all travel trailer parks that accept any travel trailers having an intermediate waste holding tank.

AUTHORITY NOTE: Promulgated in accordance with R.S. 40:4(A)(7) and R.S. 40:5(2)(3)(7)(9)(16)(17)(20).

HISTORICAL NOTE: Promulgated by the Department of Health and Hospitals, Office of Public Health, LR 38:

§1507. Plans and Specifications

A. The owner or operator of every travel trailer park, before providing areas of space for the use and accommodation of travel trailers, shall make application for a permit (where such permit is required by state, parish, city or other local laws or ordinances) or, regardless of whether or not an actual permit is required, shall file two sets of plans and specifications with the department(s) having jurisdiction for their review and approval. The plans and specifications shall be in detail and shall include/comply with the following:

1. a scaled plot plan of the park, indicating the spaces, area or portion of the park for the parking of travel trailers;

2. the size, location and specification of the park drainage system;

3. the size, location and specification of water supply lines;

4. the size, location and layout of service building (see §1509);

5. the size, location, specification and layout of the fire protection system, if applicable;

6. a scaled layout of typical trailer sites;

7. applications/submittals shall bear the approval of the local enforcement agencies as to compliance with city or parish plumbing, zoning and health ordinances;

8. plumbing required by this Chapter shall comply with all city, parish and state plumbing and health ordinances and regulations;

9. the issuance of a permit (or an approval of a submittal) shall not constitute approval of any violation of this code or violation of any city or parish ordinance or regulation; and,

10. an approved set of plans and specifications and a copy of the permit (or written approval of a submittal) shall be kept on the park premises until the final inspection has been made.

AUTHORITY NOTE: Promulgated in accordance with R.S. 40:4(A)(7) and R.S. 40:5(2)(3)(7)(9)(16)(17)(20).

HISTORICAL NOTE: Promulgated by the Department of Health and Hospitals, Office of Public Health, LR 38:

§1509. Service Buildings

A. Each travel trailer park shall have at least one service building to provide necessary sanitation and laundry facilities as specified in Subsections B through E of this Section. The service building shall be of permanent construction with an interior finish of moisture resistant material which will stand frequent washing and cleaning and the building shall be well-lighted and ventilated at all times.

B. Service Building for Independent Trailers

The service building(s) of only independent travel trailer parks shall have a minimum of one water closet, one lavatory, one shower or bathtub for females and one water closet, one lavatory, and one shower or bathtub for males. In addition, at least one laundry tray or clothes washing machine and one drinking fountain shall be provided.

1. The laundry tray or clothes washing machine and drinking fountain shall be located in a common area. None of these fixtures shall be located within any toilet room.

C. Service Building for Dependent Trailers

The service building(s) in parks that also accommodate dependent travel trailers shall have a minimum of two water closets, one lavatory, one shower or bathtub for females, and one water closet, one lavatory, one urinal, and one shower or bathtub for males. In addition, at least one laundry tray or clothes washing machine and one drinking fountain located in a common area shall be provided. The above facilities are for a maximum of ten dependent travel trailers. For every ten additional dependent travel trailers (or any fraction thereof) the following additional fixtures shall be provided: One laundry tray or clothes washing machine, one shower or bathtub for each sex, and one water closet for females. Also, one additional water closet for males shall be provided for every 15 additional dependent travel trailers (or any fraction thereof).

1. The laundry tray(s) and/or clothes washing machine(s) and drinking fountain(s) shall be located in a common area. None of these fixtures shall be located within any toilet room.

D. Hot and cold water shall be provided for all plumbing fixtures except water closets, urinals and drinking fountains.

E. Each water closet, tub and/or shower shall be in separate compartments, with self-closing doors on all water closet compartments. The shower stall shall be a minimum of 3 x 3 ft (914 x 914 mm) in area, with a dressing compartment with a stool or bench for females.

F. Floor Drains. A minimum 2-inch floor drain protected by and approved trap primer shall be installed in each toilet room (see §415.E) and laundry room.

AUTHORITY NOTE: Promulgated in accordance with R.S. 40:4(A)(7) and R.S. 40:5(2)(3)(7)(9)(16)(17)(20).

HISTORICAL NOTE: Promulgated by the Department of Health and Hospitals, Office of Public Health, LR 38:

§1511. Materials

A. Unless otherwise provided for in this Chapter, all piping fixtures or devices used in the installation of drainage and water distribution systems for travel trailer parks, or parts thereof, shall conform to the quality and weights of materials required by the Louisiana State Plumbing Code.

AUTHORITY NOTE: Promulgated in accordance with R.S. 40:4(A)(7) and R.S. 40:5(2)(3)(7)(9)(16)(17)(20).

HISTORICAL NOTE: Promulgated by the Department of Health and Hospitals, Office of Public Health, LR 38:

§1513. General Regulations

A. Unless otherwise provided for in this Chapter, all plumbing fixtures, piping drains, appurtenances and appliances designed and used in a park drainage, water distribution system and service connections shall be installed in conformance with the Louisiana State Plumbing Code.

AUTHORITY NOTE: Promulgated in accordance with R.S. 40:4(A)(7) and R.S. 40:5(2)(3)(7)(9)(16)(17)(20).

HISTORICAL NOTE: Promulgated by the Department of Health and Hospitals, Office of Public Health, LR 38:

§1515. Park Drainage System

A. The sewer main and sewer laterals shall be installed in a separate trench not less than 5 feet (1524 mm) from the park water service or distribution system. See §§613.C and 613.D.

B. The minimum size of pipe in any travel trailer park drainage system shall be 4 inches.

C. Each travel trailer shall be considered as 6 fixture units in determining discharge requirements in the design of park drainage and sewage disposal systems.

D. Minimum $\text{grade}_{(S)}$ for sewers shall be so designed that the flow will have a mean velocity of 2 fps (0.6096 m/s) when the pipe is flowing half full.

E. The discharge of a park drainage system shall be connected to a community sewerage system. Where a community sewerage system is not available, an approved commercial treatment facility or individual sewerage system shall be installed in accord with the requirements of LAC 51:XIII (Sewage Disposal).

F. Manholes and/or cleanouts shall be provided and constructed as required in Chapter 7 of this code. Manholes and/or cleanouts shall be accessible and brought to $\text{grade}_{(G)}$.

G. When in a travel trailer park (*i.e.*, other than a single travel trailer on its own lot), the sewer main shall be provided with a minimum 4-inch vent, not more than 5 feet (1524 mm) downstream from its upper trap. Long mains shall be provided with additional relief vents at intervals of not more than 200 feet (61 m) thereafter. These relief vents shall be a minimum of 4 inches and shall be securely supported and extended a minimum of 10 feet (3048 mm) above $\text{grade}_{(G)}$.

H. Branch lines or sewer laterals to individual travel trailers shall be not less than 4-inch diameter.

I. Sewer inlets shall be 4-inch diameter and extend above $\text{grade}_{(G)}$ 3 to 6 inches (76 to 152 mm). Each inlet shall be provided with a gas-tight seal when connected to a trailer and have a gas-tight seal plug for use when not in service.

J. Each trailer site shall be provided with a trailer trap. Sewer laterals over 30 ft (9144 mm) from the main park drainage sewer shall be provided with an individual vent and shall also be provided with a 4-inch cleanout brought to grade(G). When an individual vent for the sewer lateral/trailer trap is required, it shall be 3-inch minimum (upstream of the clean out fitting) and shall extend not less than 10 inches above the roof of the travel trailer.

K. To provide the shortest possible drain connection between the travel trailer outlet and sewer inlet, all sewer inlets should terminate with reference to the site location of the travel trailer.

L. Drain connections shall slope continuously downward and form no traps. All pipe joints and connections shall be installed and maintained gastight and watertight.

M. No sewage, waste water, or any other effluent shall be allowed to be deposited on the surface of the ground.

N. Testing the Park Drainage System. Upon completion and before covering, the park drainage system shall be subjected to a static water test performed in accordance with §§319.A and 319.B.1.

AUTHORITY NOTE: Promulgated in accordance with R.S. 40:4(A)(7) and R.S. 40:5(2)(3)(7)(9)(16)(17)(20).

HISTORICAL NOTE: Promulgated by the Department of Health and Hospitals, Office of Public Health, LR 38:

§1517. Water Distribution System

A. General. Every travel trailer site shall be provided with an individual branch water service line delivering potable water. The outlet of the branch water service line shall terminate on the left side of the site of the travel trailer.

B. Minimum Size. Water service lines to each trailer site shall be sized to provide a minimum of 8 gpm (0.505 L/s) at the point of connection with the trailer's water distribution system. All water service lines shall be a minimum of ¾ inch.

C. Backflow. A minimum of a double check valve assembly backflow preventer shall be installed on the water service line to each independent trailer at, or near, the trailer's water service connection. Backflow preventer devices shall meet the requirements of §609.B and Table 609 of this Part. Check valves shall be designed and maintained to close drip tight at a reduced pressure of not less than 1 nor more than 5 psi (6.9 to 34.5 kPa). Check valves must be identified with the manufacturer's name and model number.

D. Separate Service Shutoff. A separate service shutoff valve shall be installed in each water service line on the supply side of the backflow preventer device. Per §617.A, such separate shutoff valve shall be a full port ball valve.

E. Water Service Connections. The water service connection from the water service line to the trailer shall be not less than 1/2-inch diameter. A rigid pipe shall not be used. Flexible metal tubing is permitted. Fittings at either end shall be of a quick disconnect type not requiring any special tools or knowledge to install or remove.

AUTHORITY NOTE: Promulgated in accordance with R.S. 40:4(A)(7) and R.S. 40:5(2)(3)(7)(9)(16)(17)(20).

HISTORICAL NOTE: Promulgated by the Department of Health and Hospitals, Office of Public Health, LR 38:

§1519. Travel Trailer Connections

A. Responsibility. When it is evident that there exists, or may exist, a violation of these rules, the owner, operator, lessee, person in charge of the park, or any other person causing a violation shall cause it to be corrected immediately or disconnect the service connection and travel trailer drain connection from the respective park water service line and sewer lateral.

B. Drain Connections. Travel trailer drain connections shall be of approved semi rigid or flexible reinforced hose having smooth interior surfaces of not less than 3-inch inside diameter. Drain connections shall be equipped with a standard quick disconnect screw or clamp type fitting, not less in size than the outlet. Drain connections shall be gastight and no longer than necessary to make the connection between the travel trailer outlet and the trap inlet on the site.

AUTHORITY NOTE: Promulgated in accordance with R.S. 40:4(A)(7) and R.S. 40:5(2)(3)(7)(9)(16)(17)(20).

HISTORICAL NOTE: Promulgated by the Department of Health and Hospitals, Office of Public Health, LR 38:

§1521. Maintenance

A. All devices or safeguards required by this Chapter shall be maintained in good working order by the owner, operator, or lessee of the travel trailer park or his designated agent.

AUTHORITY NOTE: Promulgated in accordance with R.S. 40:4(A)(7) and R.S. 40:5(2)(3)(7)(9)(16)(17)(20).

HISTORICAL NOTE: Promulgated by the Department of Health and Hospitals, Office of Public Health, LR 38:

§1523. Individual Travel Trailers

A. Individual travel trailers located within previously constructed travel trailer parks shall be provided with a trailer trap in accord with §1003.E.

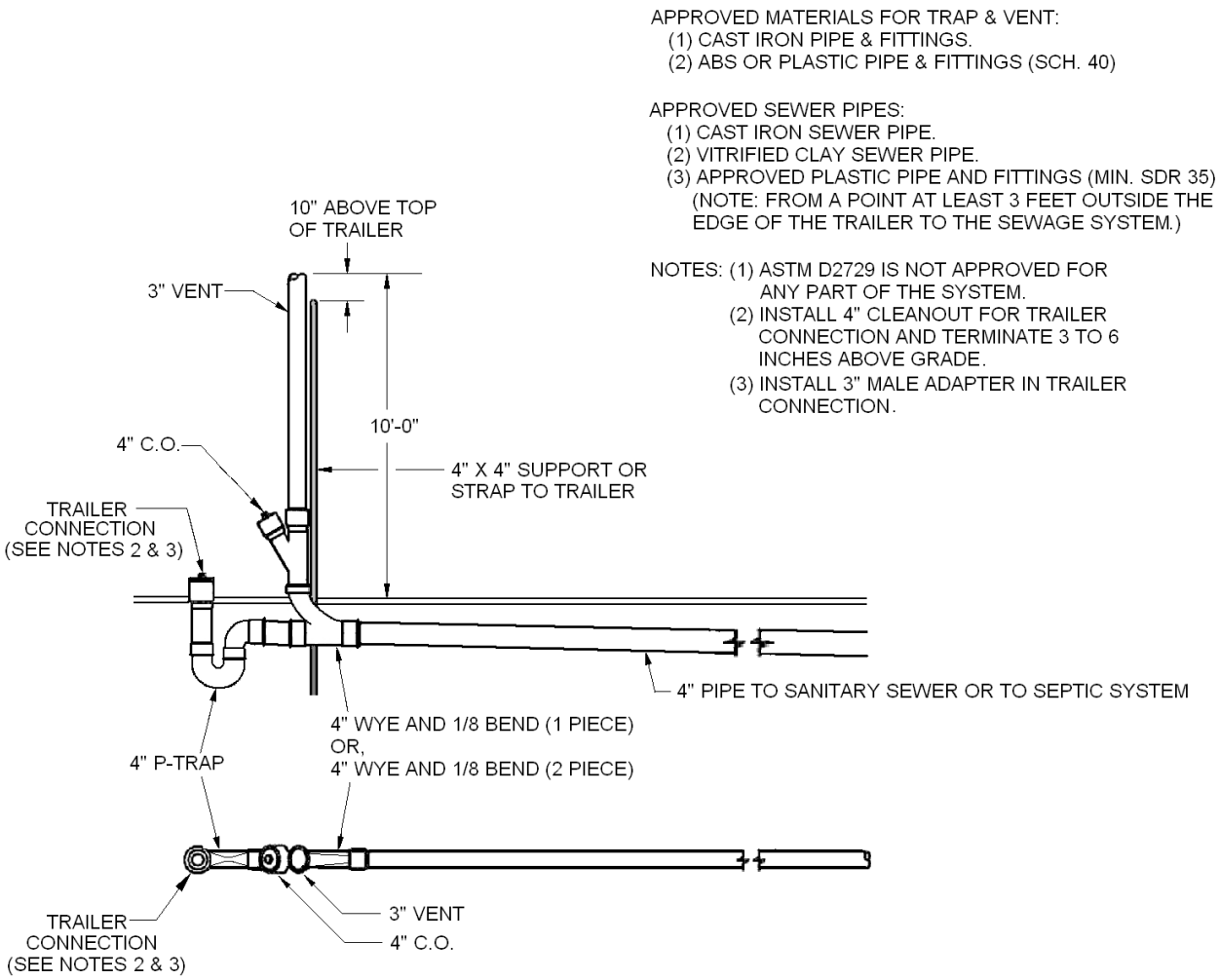

Figure 1523.A—Trailer Trap and Vent

AUTHORITY NOTE: Promulgated in accordance with R.S. 40:4(A)(7) and R.S. 40:5(2)(3)(7)(9)(16)(17)(20).

HISTORICAL NOTE: Promulgated by the Department of Health and Hospitals, Office of Public Health, LR 38:

Chapter 16. Mobile/Manufactured Homes and Mobile/Manufactured Home Parks [formerly Appendix C—Mobile/ Manufactured Homes and Mobile/Manufactured Home Parks]

§1601. Purpose, Application and Scope

A. With the exception of §1623, the requirements set forth in this Chapter shall apply specifically to all new mobile/manufactured home parks, and to additions to existing parks as herein defined, and are to provide minimum standards for sanitation and plumbing installation within these parks, for the accommodation, use and parking of mobile/manufactured homes. Plumbing installations within mobile/manufactured homes shall be installed in accordance with NFPA 1192.

AUTHORITY NOTE: Promulgated in accordance with R.S. 40:4(A)(7) and R.S. 40:5(2)(3)(7)(9)(16)(17)(20).

HISTORICAL NOTE: Promulgated by the Department of Health and Hospitals, Office of Public Health, LR 38:

§1603. Definitions

A. Definitions contained in Chapter 2 and in §1503 shall also apply to this Chapter, except where the following special definition shall apply.

Mobile/Manufactured Home—a vehicular, portable structure built on a chassis and designed to be used as a dwelling without a permanent foundation when connected to indicated utilities per NFPA 1192.

AUTHORITY NOTE: Promulgated in accordance with R.S. 40:4(A)(7) and R.S. 40:5(2)(3)(7)(9)(16)(17)(20).

HISTORICAL NOTE: Promulgated by the Department of Health and Hospitals, Office of Public Health, LR 38:

§1605. General Regulations

A. Other general provisions of this code shall govern the installation of plumbing systems in mobile/manufactured home parks, except where special conditions or construction are specifically defined in this Chapter.

B. Mobile/manufactured homes shall not hereafter be parked in any mobile/manufactured home park unless plumbing and sanitation facilities have been installed and maintained in conformity with these regulations. Every mobile/manufactured home shall provide a gastight and watertight connection for sewage disposal which shall be

connected to an underground sewage collection system discharging into a community sewerage system, a commercial treatment facility, or an individual sewerage system which has been approved by the state health officer.

AUTHORITY NOTE: Promulgated in accordance with R.S. 40:4(A)(7) and R.S. 40:5(2)(3)(7)(9)(16)(17)(20).

HISTORICAL NOTE: Promulgated by the Department of Health and Hospitals, Office of Public Health, LR 38:

§1607. Plans and Specifications

A. The owner or operator of every mobile/manufactured home park, or the plumbing contractor employed by him before providing areas of space for the use and accommodation of mobile/manufactured homes, shall make application for a permit (where such permit is required by state, parish, city or other local laws or ordinances) or regardless of whether or not an actual permit is required, shall file two sets of plans and specifications with the department(s) having jurisdiction for their review and approval. The plans and specifications shall be in detail and shall include/comply with the following:

1. a scaled plot plan of the park, indicating the spaces, area or portion of the park for the parking of mobile/manufactured homes;
2. size, location and specification of park drainage system;
3. size, location and specification of water supply lines;
4. size, location and layout of service building, if applicable (see §1619.);
5. size, location, specification and layout of the fire protection system, if applicable;
6. a scaled layout of typical mobile/manufactured home sites;
7. applications/submittals shall bear the approval of the local enforcement agencies as to compliance with city or parish plumbing, zoning and health ordinances;
8. plumbing required by this Chapter shall comply with all city, parish and state plumbing and health ordinances and regulations;
9. the issuance of a permit (or an approval of a submittal) shall not constitute approval of any violation of this code or violation of any city or parish ordinance or regulation; and,
10. an approved set of plans and specifications and a copy of the permit (or written approval of a submittal) shall be kept on the park premises until the final inspection has been made.

AUTHORITY NOTE: Promulgated in accordance with R.S. 40:4(A)(7) and R.S. 40:5(2)(3)(7)(9)(16)(17)(20).

HISTORICAL NOTE: Promulgated by the Department of Health and Hospitals, Office of Public Health, LR 38:

§1609. Materials

A. Unless otherwise provided for in this Chapter, all piping fixtures or devices used in the installation of drainage and water distribution systems for mobile/manufactured home parks, or parts thereof, shall conform to the quality and weights of materials required by the Louisiana State Plumbing Code.

AUTHORITY NOTE: Promulgated in accordance with R.S. 40:4(A)(7) and R.S. 40:5(2)(3)(7)(9)(16)(17)(20).

HISTORICAL NOTE: Promulgated by the Department of Health and Hospitals, Office of Public Health, LR 38:

§1611. General Regulations

A. Unless otherwise provided for in this Chapter, all plumbing fixtures, piping, drains, appurtenances and appliances designed and used in a park drainage, water distribution system and service connections shall be installed in conformance with the Louisiana State Plumbing Code.

AUTHORITY NOTE: Promulgated in accordance with R.S. 40:4(A)(7) and R.S. 40:5(2)(3)(7)(9)(16)(17)(20).

HISTORICAL NOTE: Promulgated by the Department of Health and Hospitals, Office of Public Health, LR 38:

§1613. Park Drainage System

A. The sewer main and sewer laterals shall be installed in a separate trench not less than 5 feet (1524 mm) from the park water service or distribution system. See §§613.C and 613.D.

B. The minimum size of pipe in any mobile/manufactured home park drainage system shall be 4 inches.

C. Each mobile/manufactured home shall be considered as 15 fixture units in determining discharge requirements in the design of park drainage and sewage disposal systems.

D. Minimum $grade_{(S)}$ for sewers shall be so designed that the flow will have a mean velocity of 2 fps (0.6096 m/s) when the pipe is flowing half full.

E. The discharge of a park drainage system shall be connected to a community sewerage system. Where a community sewerage system is not available, an approved commercial treatment facility or an individual sewerage system shall be installed in accord with the requirements of LAC 51:XIII (Sewage Disposal).

F. Manholes and/or cleanouts shall be provided and constructed as required in Chapter 7 of this code. Manholes and/or cleanouts shall be accessible and brought to $grade_{(G)}$.

G. When located in a mobile/manufactured home park (i.e., other than a single mobile/manufactured home on its own lot), the sewer main shall be provided with a minimum 4-inch vent, not more than 5 feet (1524 mm) downstream from its upper trap. Long mains shall be provided with additional relief vents at intervals of not more than 200 feet (61 m) thereafter. These relief vents shall be a minimum of 4 inches and shall be securely supported and extended a minimum of 10 feet (3048 mm) above $grade_{(G)}$.

H. Branch lines or sewer laterals to mobile/manufactured homes shall be not less than 4-inch diameter.

I. Sewer inlets shall be 4-inch diameter and extend above $grade_{(G)}$ 3 to 6 inches (76 to 152 mm). Each inlet shall be provided with a gastight seal when connected to a mobile/manufactured home and have a gastight seal plug for use when not in service.

J. Each mobile/manufactured home site shall be provided with a trailer trap. Sewer laterals over 30 ft (9144 mm) from the main park drainage sewer shall be provided with an individual vent and shall also be provided with a 4-inch cleanout brought to $grade_{(G)}$. When an individual vent for the sewer lateral/trailer trap is required, it shall be 3-inch minimum (upstream of the clean out fitting) and shall extend not less than 10 inches above the roof of the mobile/manufactured home.

K. To provide the shortest possible drain connection between the mobile/manufactured home outlet and sewer inlet, all sewer inlets should terminate in the rear one-third of the mobile/manufactured home as placed on the site.

L. Drain connections shall slope continuously downward and form no traps. All pipe joints and connections shall be installed and maintained gastight and watertight.

M. No sewage, waste water, or any other effluent shall be allowed to be deposited on the surface of the ground.

N. Testing the Park Drainage System. Upon completion and before covering, the park drainage system shall be subjected to a static water test performed in accordance with §§319.A and 319.B.1.

AUTHORITY NOTE: Promulgated in accordance with R.S. 40:4(A)(7) and R.S. 40:5(2)(3)(7)(9)(16)(17)(20).

HISTORICAL NOTE: Promulgated by the Department of Health and Hospitals, Office of Public Health, LR 38:

§1615. Water Supply and Distribution Systems

A. General. Every mobile/manufactured home site shall be provided with an individual branch water service line delivering potable water. The outlet of the branch water service line shall terminate on the left side of the site of the mobile/manufactured home.

B. Minimum Size. Water service lines to each mobile/manufactured home site shall be sized to provide a minimum of 17 gpm (1.1 L/s) at the point of connection with the mobile/manufactured home's water distribution system. All water service lines shall be a minimum of 3/4-inch.

C. Separate Service Shutoff. A separate service shutoff valve shall be installed in each water service line. Per §617.A, such separate shutoff valve shall be a full port ball valve.

D. Water Service Connections. The water service connection from the water service line to the mobile/manufactured home shall be not less than 1/2-inch diameter. A rigid pipe shall not be used. Flexible metal tubing is permitted. Fittings at either end shall be of a quick disconnect type not requiring any special tools or knowledge to install or remove.

E. Water Supply System Design. The water supply system shall be designed to provide a minimum of 150 gallons (568 L) per day for each mobile/manufactured home, plus such additional volume as may be required for fire protection of the park, service buildings and other community facilities.

AUTHORITY NOTE: Promulgated in accordance with R.S. 40:4(A)(7) and R.S. 40:5(2)(3)(7)(9)(16)(17)(20).

HISTORICAL NOTE: Promulgated by the Department of Health and Hospitals, Office of Public Health, LR 38:

§1617. Mobile/Manufactured Home Connections

A. Responsibility. When it is evident that there exists, or may exist, a violation of these rules, the owner, operator, lessee, person in charge of the park or any other person causing a violation shall cause it to be corrected immediately or disconnect the service connections and mobile/manufactured home drain connection from the respective park water service line and sewer lateral.

B. Drain Connections. Mobile/manufactured home drain connections shall be of approved semi-rigid pipe having smooth interior surfaces of not less than 3-inch inside diameter. Drain connections shall be equipped with a standard quick disconnect screw, clamp type fitting or solvent welder, not less in size than the outlet. Drain connections shall be gastight and no longer than necessary to make the connection between the mobile/manufactured home outlet and the trap inlet on the site.

AUTHORITY NOTE: Promulgated in accordance with R.S. 40:4(A)(7) and R.S. 40:5(2)(3)(7)(9)(16)(17)(20).

HISTORICAL NOTE: Promulgated by the Department of Health and Hospitals, Office of Public Health, LR 38:

§1619. Service Buildings

A. Each mobile/manufactured home park serving travel trailers shall have at least one service building to provide minimum sanitation and laundry facilities in accord with §1509.

AUTHORITY NOTE: Promulgated in accordance with R.S. 40:4(A)(7) and R.S. 40:5(2)(3)(7)(9)(16)(17)(20).

HISTORICAL NOTE: Promulgated by the Department of Health and Hospitals, Office of Public Health, LR 38:

§1621. Maintenance

A. All devices or safeguards required by this Chapter shall be maintained in good working order by the owner, operator, or lessee of the mobile/manufactured home park or his designated agent.

AUTHORITY NOTE: Promulgated in accordance with R.S. 40:4(A)(7) and R.S. 40:5(2)(3)(7)(9)(16)(17)(20).

HISTORICAL NOTE: Promulgated by the Department of Health and Hospitals, Office of Public Health, LR 38:

§1623. Individual Mobile/Manufactured Homes

A. Individual mobile/manufactured homes located within previously constructed mobile/manufactured home parks shall be provided with a trailer trap in accord with §1003.E.

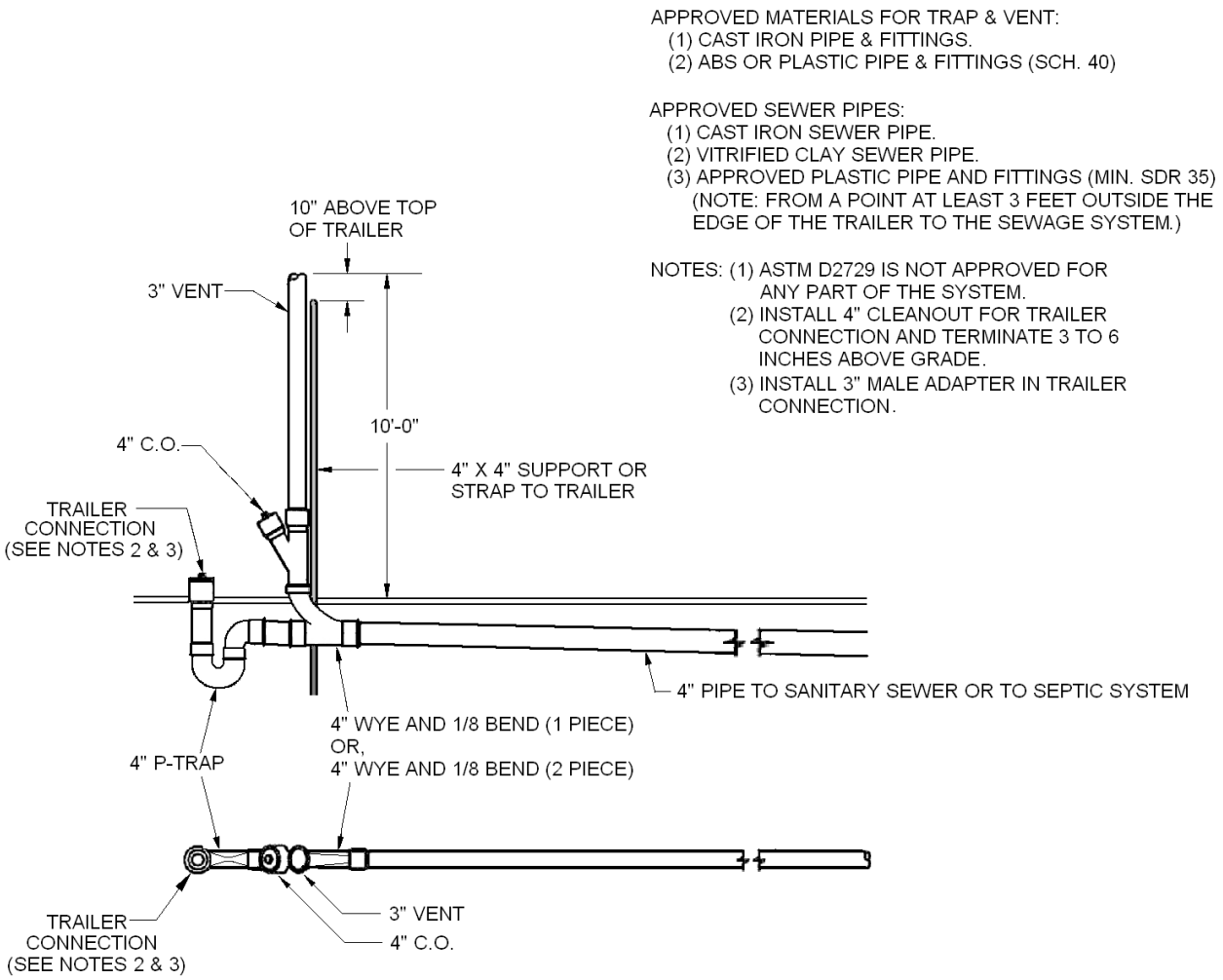

Figure 1623.A—Trailer Trap and Vent

AUTHORITY NOTE: Promulgated in accordance with R.S. 40:4(A)(7) and R.S. 40:5(2)(3)(7)(9)(16)(17)(20).

HISTORICAL NOTE: Promulgated by the Department of Health and Hospitals, Office of Public Health, LR 38:

Chapter 17. Sewerage System Regulations [formerly Appendix E—Private Sewage Disposal]

§1701. General

A. Refer to Part XIII (Sewage Disposal) of the State of Louisiana Sanitary Code (LAC 51:XIII) for applicable sewage disposal regulations.

AUTHORITY NOTE: Promulgated in accordance with R.S. 40:4(A)(7) and R.S. 40:5(2)(3)(7)(9)(16)(17)(20).

HISTORICAL NOTE: Promulgated by the Department of Health and Hospitals, Office of Public Health, LR 38:

Chapter 18. Appendices

§1801. Scope

A. The provisions of the appendices contained in this Chapter are designed for informational purposes only. When the word "shall' is used in one or more provisions of this Chapter, it is advisable to take the provision seriously and as though it were an actual requirement. Doing so will assist in ensuring compliance with the actual requirements of Chapters 1-17.

§1803. Appendix A—Roof Drain Sizing Method

A. Sizing Example. The following example gives one method of sizing the primary drain system and sizing the scuppers in the parapet walls. This method converts the roof area to an equivalent roof area for a 4-inch rate of rainfall so that Table 1111.A and Table 1111.B can be used as printed. The method described in §1111.B.2 converts Table 1111.A and Table 1111.B to tables for the rate of rainfall specified for the area.

1. Problem: Given the roof plan in Figure 1803.A.1 and the site location in Birmingham, Alabama, size the primary roof drain system and size the scuppers, denoting the required head of water above the scupper for the structural engineer.

Note: For the purposes of this appendix the following metric conversions are applicable:
1 in = 25.4 mm
1 ft = 305 mm
1 ft^2 = 0.0929 m^2

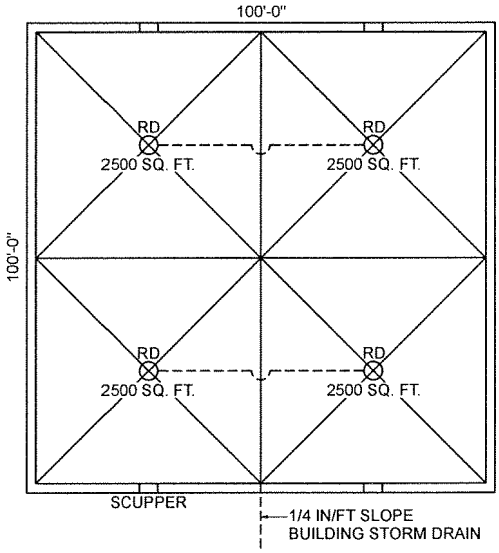

Figure 1803.A.1—Example Roof Plan

2. Solution:

Step a. From Figure 1111.E the 100 year 60 minute precipitation is 3.75 inches per hour.

Step b. Each vertical drain must carry 2,500 sq ft of roof area at 3.75 inches per hour of rainfall. To convert to an area for a 4 inch per hour rainfall to enter Table 1111.A do this:
2,500 ÷ 4 x 3.75 = 2,344 sq ft.
Enter Table 1111.A until you find a diameter pipe that will carry 2,344 sq ft. A minimum 4-inch vertical drain is required.

Step c. Horizontal Drain
2,500 sq ft.
To convert to an area for use in Table 1111.B do this:
2,500 ÷ 4 x 3.75 = 2,344 sq ft
Enter Table 1111.B until you find a diameter pipe that will carry 2,344 sq ft.
A minimum 4-inch diameter pipe with a 1/4 inch per foot slope will carry 2,650 sq ft. A minimum 4-inch diameter drain on a 1/4 inch per foot slope is required.

Step d. Horizontal Drain
5,000 sq ft.
To convert to an area for use in Table 1111.B do this:
5,000 ÷ 4 x 3.75 = 4,688 sq ft.
Enter Table 1111.B until you find a diameter pipe that will carry 4,688 sq ft. A 5-inch diameter pipe with a 1/4 inch per foot slope will carry 4,720 sq ft. A minimum 5-inch diameter drain on a 1/4 inch per foot slope is required.

Step e. Horizontal Drain
10,000 sq ft.
To convert to an area for use in Table 1111.B do this:
10,000 ÷ 4 x 3.75 = 9,375 sq ft.
Enter Table 1111.B until you find a diameter pipe that will carry 9,375 sq ft. An 8-inch diameter pipe on 1/4 inch per foot slope will carry 16,300 sq ft but a 6-inch will carry only 7,550 sq ft; therefore, use an 8-inch diameter drain on a 1/4 inch per foot slope.

Step f. From Figure 1113.C the rate caused by a 100 year 15 minute precipitation is 7.2 inches per hour. The scuppers must be sized to carry the flow caused by a rain fall rate of 7.2 inches per hour.

Step g. Each scupper is draining 2,500 sq ft of roof area. To convert this roof area to an area for use with Table 1803.A.2 do this:
2,500 ÷ 4 x 7.2 = 9,375 sq ft = 4,500 sq ft.
Enter Table 1803.A.2 to find a length and head that will carry 4,500 sq ft or more. From Table 1803.A.2 a 12-inch wide weir with a 4-inch head carries 6,460 sq ft. Use 12-inch wide x 5-inch high scuppers at four locations. A height of 5 inches is needed to assure an open area above the 4-inch head.

Step h. Notify the structural engineer that the design of the roof structure must account for a height of water to the scupper entrance elevation plus 4 inches for the required head to cause design flow.

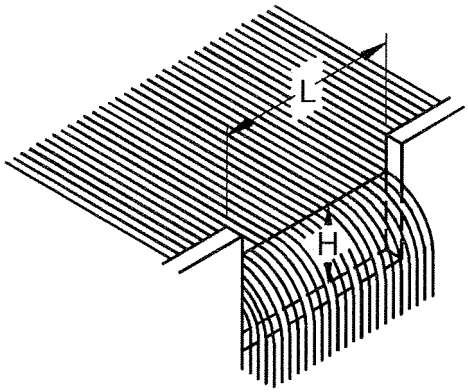

Figure 1803.A.2—Example Scupper

Table 1803.A.2
Scupper Sizing Table
Roof Area (Sq ft)

Head (H) Inches	Length (L) of Weir (Inches)						
	4	6	8	12	16	20	24
1	273	418	562	851	1,139	1,427	1,715
2	734	1,141	1,549	2,365	3,180	3,996	4,813
3	1,274	2,023	2,772	4,270	5,768	7,267	8,766
4	1,845	2,999	4,152	6,460	8,766	11,073	13,381
6	2,966	5,087	7,204	11,442	15,680	19,918	24,160

Note: Based on rainfall of 4 inches per hour.

AUTHORITY NOTE: Promulgated in accordance with R.S. 40:4(A)(7) and R.S. 40:5(2)(3)(7)(9)(16)(17)(20).

HISTORICAL NOTE: Promulgated by the Department of Health and Hospitals, Office of Public Health, LR 38:

§1805. Appendix B—Sizing of Water Piping System [Formerly Appendix F—Sizing of Water Piping System]

A. Scope. This appendix outlines a procedure for sizing a water piping system. This design procedure is based on the minimum static pressure available from the supply source, the head charges in the system due to friction and elevation, and the rates of flow necessary for operation of various fixtures.

1. Because of the variable conditions encountered in hydraulic design, it is impractical to specify definite and detailed rules for sizing of the water piping system.

Accordingly, other sizing or design methods conforming to good engineering practice standards are acceptable alternates to that presented herein.

B. Information Required. Prior to beginning calculations, the following preliminary information shall be measured or otherwise obtained from the water supplier.

1. Static Water Service Pressure/Meter Friction Loss. The minimum daily static water service pressure in the area where the building is to be located shall be measured or otherwise obtained from the water supplier. If the building's water supply is to be metered, obtain information regarding friction loss relative to the rate of flow for meters in the range of sizes likely to be used. Friction loss data can be obtained from most manufacturers of water meters.

C. Estimate of Demand Load Required. Prior to beginning calculations, the following estimates shall be made.

1. Fixture Water Supply Demand. Estimate the water supply demand of the building main and the principal branches and risers of the water distribution system by totaling the corresponding demand for fixtures from the applicable part of Table 1805.C. The Load (in water supply fixture units) listed in Column 1 of Table 1805.C shall be calculated using the load values, in water supply fixture units, obtained from Table 1805.B.

2. Continuous Water Supply Demand. Estimate continuous water supply demands in gallons per minute for lawn sprinklers, air conditioners, etc., and add the sum to the total water supply demand for fixtures. The result is the estimated total water supply demand for the building.

D. Selection of Pipe Size. The selection of the size for the water service pipe, water riser pipes, branch supply lines, etc., shall be calculated using the following procedures.

1. General. Decide the desirable minimum residual pressure that should be maintained at the highest fixture in the water distribution system. If the highest group of fixtures contains flush valves, the pressure for the group should be not less than 15 psi (103.4 kPa) flowing. For flush tank supplies, the available pressure may not be less than 8 psi (55.2 kPa) flowing, except blowout action fixtures may not be less than 25 psi (172.4 kPa) flowing.

2. Pipe Sizing. Pipe sizes may be selected according to the following procedure, except that the sizes selected shall be not less than the minimum required by the Louisiana State Plumbing Code.

a. This water pipe sizing procedure is based on a system of pressure requirements and losses, the sum of which must not exceed the minimum pressure available at the supply source. These pressures are as follows.

i. Pressure required at fixture to produce required flow. See §§611.C, 611.D, and 611.E.

ii. Static pressure loss or gain (due to head) is computed at 0.433 psi per foot (9.8 kPa/m) of elevation change. Example: Assume that the highest fixture supply outlet is 20 ft (6.1 m) above or below the supply source. This produces a static pressure differential of 20 ft x 0.433 psi/ft (6.1 m x 9.8 kPa/m) which equates to an 8.66 psi (59.8 kPa) loss or an 8.66 psi (59.8 kPa) gain.

iii. Loss through water meter. The friction or pressure loss can be obtained from meter manufacturers.

iv. Loss through taps in water main. See Table 1805.D.

v. Losses through special devices such as filters, softeners, backflow preventers, and pressure regulators. These values must be obtained from the manufacturers.

vi. Loss through valves and fittings, see Tables 1805.E and 1805.F. Losses for these items are calculated by converting to equivalent length of piping and adding to the total pipe length.

vii. Loss due to pipe friction can be calculated when the pipe size, the pipe length and the flow through the pipe are known. With these three items, the friction loss can be determined using Figures 1805.A.1 through 1805.D. When using charts, use pipe inside diameter. For piping flow charts not included, use manufacturers' tables and velocity recommendations.

3. Example. The following example is provided to assist one in calculating the proper sizing of the water piping system for a plumbing installation of a building or other structure.

NOTE: For the purposes of this example the following metric conversions are applicable:

1 cfm = 0.4719 L/s	1 ft^2 = 0.0929 m^2
1 degree = 0.0175 rad	1 psi = 6.895 kPa
1 in = 25.4 mm	1 gpm = 0.0631 L/s

a. Problem: What size copper water pipe, service and distribution will be required to serve a two story factory building having on each floor, back-to-back, two toilet rooms each equipped with hot and cold water? The highest fixture is 21 feet above the street main which is tapped with a 2-inch corporation cock at which point the minimum pressure is 55 psi. In the building basement a 2-inch meter and 3-inch reduced pressure zone backflow preventer with a maximum pressure drop of 9 psi are to be installed. The system is shown by the example diagram (Figure 1805.D.3). To be determined are the pipe sizes for the service main and the cold and hot water distribution pipes.

b. Solution: A tabular arrangement such as shown in Table 1805.A should first be constructed. The steps to be followed in solving the problem are indicated by the tabular arrangement itself as they are in sequence, Columns 1 through 10 and Lines a through l.

i. Step i. Perform the following:

(a). Column 1: Divide the system into sections breaking at major changes in elevation or where branches lead to fixture groups. After point B (see figure 1805.D.3) separate consideration will be given to the hot and cold water piping. Enter the sections to be considered in the service and cold water piping in Column 1 of the tabular arrangement.

(b). Column 3: According to the method given in §1805.C, determine the gpm of flow to be expected in each section of the system. These flows range from 28.6 to 108 gpm.

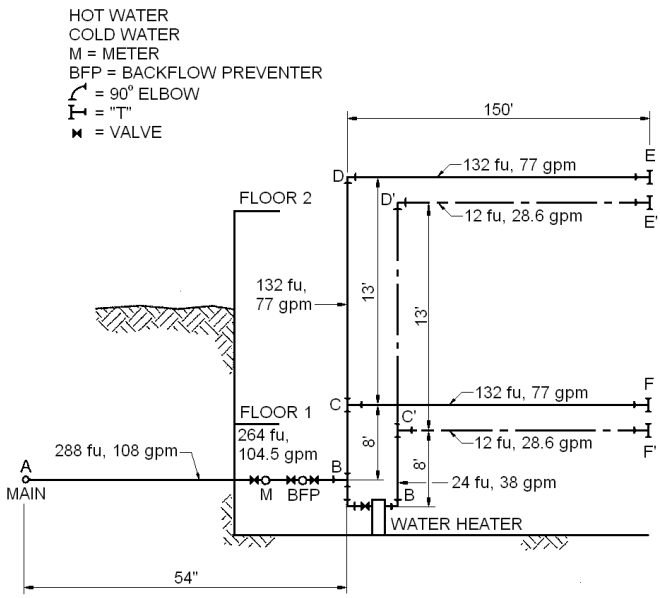

Figure 1805.D.3—Sizing Example

ii. Step ii. Perform the following:

(a). Line "a": Enter the minimum pressure available at the main source of supply in Column 2. This is 55 psi.

(b). Line "b": Determine from §611.E the highest pressure required for the fixtures on system, which is 15 psi, to operate a flushometer valve.

(c). Line "c": Determine the pressure loss for the meter size given or assumed. The total water flow from the main through the service as determined in Step i above will serve to aid in the meter selected.

(d). Line "d": Select from Table 1805.D and enter the pressure loss for the tap size given or assumed.

(e). Line "e": Determine the difference in elevation between the main or source of supply and the highest fixture on the system and multiply this figure, expressed in feet, by 0.433 psi. Enter the resulting psi product on Line "e".

(f). Lines "f, g, h": The pressure losses through filters, backflow preventers or other special fixtures must be obtained from the manufacturer or estimated and entered on these lines.

iii. Step iii. Line "i": The sum of (Lines "b" through "h") the pressure requirements and losses which affect the overall system is entered on this line.

iv. Step iv. Line "j": Subtract Line "i" from Line "a". This gives the pressure which remains available from overcoming friction losses in the system. This figure is a guide to the pipe size which is chosen for each section, as the total friction losses through the longest run of pipe.

(a). Exception. When the main is above the highest fixture, the resulting psi must be considered a pressure gain (static head gain) and omitted from the sums of Lines "b" through "h" and added to Line "j".

v. Step v. Column 4: Enter the length of each section from the main to the end of the longest run (at Point E).

vi. Step vi. Column 5: Select a trial pipe size. A rule of thumb is that size will become progressively smaller as the system extends farther from the main source of supply. (Trial pipe size may be arrived at by the following formula: PSI = j x 100/Total pipe length)

EXAMPLE: PSI = 9.36 x 100/225 = 4.16
From main to most remote outlet—Check applicable graph for size for this PSI and GPM

vii. Step vii. Column 6: Select from Table 1805.E or 1805.F the equivalent lengths for the trial pipe size of fittings and valves on the section. Enter the sum for each section in Column 6. (The number of fittings to be used in the installation of this piping must be an estimate.)

viii. Step viii. Column 7: Add the figures from Column 4 and Column 6, and enter in Column 7. Express the sum in 100s of feet.

ix. Step ix. Column 8: Select from the applicable figure (Figures 1805.A.1 through 1805.D) the friction loss per 100 feet of pipe for the gpm flow in a section (Column 3) and trial pipe size (Column 5).

x. Step x. Column 9: Multiply the figures in Columns 7 and 8 for each section and enter in Column 9.

xi. Step xi. Line k: Enter the sum of the values in Column 9. In summing, use only those values associated with the longest run (i.e., don't use the value associated with section CF unless the friction loss for CF by itself is greater than the combined fixture loss of AB + BC + CD + DE).

xii. Step xii. Line 1: Subtract Line "k" from Line "j" and enter in Column 10.

(a). The result should always be a positive or plus figure. If it is not, it is necessary to repeat the operation utilizing Columns, 5, 6, 8 and 9 until a balance or near balance is obtained. If the difference between Lines "j" and "k" is positive and large, it is an indication that the pipe sizes are too large and may, therefore, be reduced thus saving materials. In such a case, the operations utilizing Columns 5, 6, 8 and 9 should again be repeated.

c. Answer: The final figures entered in Column 5 become the design pipe size for the respective sections. Repeating this operation a second time using the same sketch but considering the demand for hot water, it is possible to size the hot water distribution piping. This has been worked up as a part of the overall problem in the tabular arrangement used for sizing the service and cold water distribution piping. It should be noted that consideration must be given the pressure losses from the street main to the water heater (section AB) in determining the hot water pipe sizes.

Table 1805.A Recommended Tabular Arrangement for Use in Solving Pipe Sizing Problems											
Column		1	2	3	4	5	6	7	8	9	10
Line		Description	Lbs. per square inch (psi)	Gal. per min. through section	Length of section (ft)	Trial pipe size (in)	Equivalent length of fittings and valves (ft)	Total equivalent length col.4 and col.6 (100 ft)	Friction loss per 100' of trial size pipe (psi)	Friction loss in equivalen t length col.8 x col.7 (psi)	Excess pressure over friction losses (psi)
a	Service and cold water distribution piping (Note 1)	Minimum pressure available at main	55.00								
b		Highest pressure required at a fixture (Section 607.4)…	15.00								
c		Meter loss 2" meter……..	11.00								
d		Tap in main loss 2" tap (Table F103A)……	1.61								
e		Static head loss 21 x 0.43 psi…	9.03								
f		Special fixture loss backflow preventer….....	9.00								
g		Special fixture loss – Filter…	0.00								
h		Special fixture loss – Other..	0.00								
i		Total overall losses and requirements (sum of lines b through h)	45.64								
j		Pressure available to overcome pipe friction (line a minus lines b to h)	9.36								
	Designation pipe section (from diagram) Cold water distribution piping		FU								
		AB……	288	108.0	54	2 ½	12	0.66	3.6	2.38	
		BC……	264	104.5	8	2 ½	2.5	0.105	3.2	0.34	
		CD……	132	77.0	13	2 ½	8	0.21	1.9	0.40	
		CF (Note 2)…..…….	132	77.0	150	2 ½	12	1.62	1.9	3.08	
		DE……	132	77.0	150	2 ½	14.5	1.645	1.9	3.12	
k	Total pipe friction losses (cold)									6.24	
l	Difference (line "j" minus line "k")							9.36	- 6.24	=	3.12
			FU								
	Pipe section (from diagram) Hot Water Distribution Piping	AB'……..…… ..	288	108.0	54	2 ½	9.6	0.64	3.3	2.1	
		B'C'…… ..	24	38.0	8	2	9.0	0.17	1.4	0.24	
		C'D'…… …..	12	28.6	13	1 ½	5	0.18	3.2	0.58	
		C'F' (Note 3)……	12	28.6	150	1 ½	14	1.64	3.2	5.25	
		D'E' ……	12	28.6	150	1 ½	7	1.57	3.2	5.02	
k	Total pipe friction losses (hot)									7.94	
l	Difference (line "j" minus line "k")							9.36	-7.94	=	1.42

1 psi = 6.895 kPa
1 gpm = 0.0631 L/s
1 ft = 305 mm
1 in = 25.4 mm

NOTES:
1. To be considered as pressure gain for fixtures below main (consider separately omit from "i" and add to "j").
2. Consider separately, in Line "k" use CF 's Column 9 friction loss only if it is a greater friction loss than the sum of Column 9 friction losses of AB + BC + CD +DE.

Table 1805.B Load Values Assigned to Fixtures[1]					
Fixture	Occupancy	Type of Supply Control	Load Values, in Water Supply Fixture Units		
			Cold	Hot	Total
Bathroom group	Private	Flush tank	2.7	1.5	3.6
Bathroom group	Private	Flush valve	6.0	3.0	8.0
Bathtub	Private	Faucet	1.0	1.0	1.4
Bathtub	Public	Faucet	3.0	3.0	4.0
Bidet	Private	Faucet	1.5	1.5	2.0

Table 1805.B Load Values Assigned to Fixtures[1]					
Fixture	Occupancy	Type of Supply Control	Load Values, in Water Supply Fixture Units		
			Cold	Hot	Total
Combination fixture	Private	Faucet	2.25	2.25	3.0
Dishwashing machine	Private	Automatic	-	1.4	1.4
Drinking fountain	Offices, etc.	3/8" valve	0.25	-	0.25
Kitchen sink	Private	Faucet	1.0	1.0	1.4
Kitchen sink	Hotel, Restaurant	Faucet	3.0	3.0	4.0
Laundry trays (1 to 3)	Private	Faucet	1.0	1.0	1.4
Lavatory	Private	Faucet	0.5	0.5	0.7
Lavatory	Public	Faucet	1.5	1.5	2.0
Service sink	Offices, etc.	Faucet	2.25	2.25	3.0
Shower head	Public	Mixing valve	3.0	3.0	4.0
Shower head	Private	Mixing valve	1.0	1.0	1.4
Urinal	Public	1" flush valve	10.0	-	10.0
Urinal	Public	3/4" flush valve	5.0	-	5.0
Urinal	Public	Flush tank	3.0	-	3.0
Washing machine (8 Ibs.)	Private	Automatic	1.0	1.0	1.4
Washing machine (8 Ibs.)	Public	Automatic	2.25	2.25	3.0
Washing machine (15 Ibs.)	Public	Automatic	3.0	3.0	4.0
Water closet	Private	Flush valve	6.0	-	6.0
Water closet	Private	Flush tank	2.2	-	2.2
Water closet	Public	Flush valve	10.0	-	10.0
Water closet	Public	Flush valve	5.0	-	5.0
Water closet	Public or Private	FlushometerTank	2.0	-	2.0

NOTE:
1. For fixtures not listed, loads should be assumed by comparing the fixture to ones listed using water in similar quantities and at similar rates. The assigned loads for fixtures with both hot and cold water supplies are given for separate hot and cold water loads and for total load, the separate hot and cold water loads being three-fourths of the total load for the fixture in each case.

Table 1805.C Table for Estimating Demand					
Supply Systems Predominantly for Flush Tanks			Supply Systems Predominantly for Flush Valves		
Load	Demand		Load	Demand	
(Water Supply Fixture Units)	(Gallons per Minute)	(Cubic Feet per Minute)	(Water Supply Fixture Units)	(Gallons per Minute)	(Cubic Feet per Minute)
1	3.0	0.041104	-	-	-
2	5.0	0.0684	-	-	-
3	6.5	0.86892	-	-	-
4	8.0	1.06944	-	-	-
5	9.4	1.256592	5	15.0	2.0052
6	10.7	1.430376	6	17.4	2.326032
7	11.8	1.577424	7	19.8	2.646364
8	12.8	1.711104	8	22.2	2.967696
9	13.7	1.831416	9	24.6	3.288528
10	14.6	1.951728	10	27.0	3.60936
11	15.4	2.058672	11	27.8	3.716304
12	16.0	2.13888	12	28.6	3.823248
13	16.5	2.20572	13	29.4	3.930192
14	17.0	2.27256	14	30.2	4.037136
15	17.5	2.3394	15	31.0	4.14408
16	18.0	2.90624	16	31.8	4.241024
17	18.4	2.459712	17	32.6	4.357968
18	18.8	2.513184	18	33.4	4.464912
19	19.2	2.566656	19	34.2	4.571856
20	19.6	2.620128	20	35.0	4.6788
25	21.5	2.87412	25	38.0	5.07984
30	23.3	3.114744	30	42.0	5.61356
35	24.9	3.328632	35	44.0	5.88192
40	26.3	3.515784	40	46.0	6.14928
45	27.7	3.702936	45	48.0	6.41664
50	29.1	3.890088	50	50.0	6.684
60	32.0	4.27776	60	54.0	7.21872
70	35.0	4.6788	70	58.0	7.75344
80	38.0	5.07984	80	61.2	8.181216
90	41.0	5.48088	90	64.3	8.595624
100	43.5	5.81508	100	67.5	9.0234
120	48.0	6.41664	120	73.0	9.75864
140	52.5	7.0182	140	77.0	10.29336

Table 1805.C Table for Estimating Demand					
Supply Systems Predominantly for Flush Tanks			Supply Systems Predominantly for Flush Valves		
Load	Demand		Load	Demand	
160	57.0	7.61976	160	81.0	10.82808
180	61.0	8.15448	180	85.5	11.42964
200	65.0	8.6892	200	90.0	12.0312
225	70.0	9.3576	225	95.5	12.76644
250	75.0	10.0260	250	101.0	13.50168
275	80.0	10.6944	275	104.5	13.96956
300	85.0	11.3628	300	108.0	14.43744
400	105.0	14.0364	400	127.0	16.97736
500	124.0	16.57632	500	143.0	19.11624
750	170.0	22.7256	750	177.0	23.66136
1000	208.0	27.80544	1000	208.0	27.80544
1250	239.0	31.94952	1250	239.0	31.94952
1500	269.0	35.95992	1500	269.0	35.95992
1750	297.0	39.70296	1750	297.0	39.70296
2000	325.0	43.446	2000	325.0	43.446
2500	380.0	50.7984	2500	380.0	50.7984
3000	433.0	57.88344	3000	433.0	57.88344
4000	535.0	70.182	4000	525.0	70.182
5000	593.0	79.27224	5000	593.0	79.27224
1 gpm = 0.0631 L/s 1 cfm = 0.4719 L/s					

Table 1805.D Loss of Pressure through Taps and Tees in Pounds Per Square Inch (psi)							
Gallons per Minute	Size of Tap or Tee (In)						
	5/8	3/4	1	1 1/4	1 1/2	2	3
10	1.35	0.64	0.18	0.08	-	-	-
20	5.38	2.54	0.77	0.31	0.14	-	-
30	12.1	5.72	1.62	0.69	0.33	0.10	-
40	-	10.2	3.07	1.23	0.58	0.18	-
50	-	15.9	4.49	1.92	0.91	0.28	-
60	-	-	6.46	2.76	1.31	0.40	-
70	-	-	8.79	3.76	1.78	0.55	0.10
80	-	-	11.5	4.90	2.32	0.72	0.13
90	-	-	14.5	6.21	2.94	0.91	0.16
100	-	-	17.94	7.67	3.63	1.12	0.21
120	-	-	25.8	11.0	5.23	1.16	0.30
140	-	-	35.2	15.0	7.12	2.20	0.41

Table 1805.D Loss of Pressure through Taps and Tees in Pounds Per Square Inch (psi)							
Gallons per Minute	Size of Tap or Tee (In)						
	5/8	3/4	1	1 1/4	1 1/2	2	3
150	-	-	-	17.2	8.16	2.52	0.47
160	-	-	-	19.6	9.30	2.92	0.54
180	-	-	-	24.8	11.8	3.62	0.68
200	-	-	-	30.7	14.5	4.48	0.84
225	-	-	-	38.8	18.4	5.6	1.06
250	-	-	-	47.9	22.7	7.00	1.31
275	-	-	-	-	27.4	7.70	1.59
300	-	-	-	-	32.6	10.1	1.88
1 in = 25.4 mm 1 psi = 6.895 kPa							

Table 1805.E Allowance in Equivalent Length of Pipe for Friction Loss in Values and Threaded Fittings								
Fitting or Valve	Pipe Sizes (in)							
	1/2	3/4	1	1 1/4	1 1/2	2	2 1/2	3
45° elbow	1.2	1.5	1.8	2.4	3.0	4.0	5.0	6.0
90° elbow	2.0	2.5	3.0	4.0	5.0	7.0	8.0	10.0
Tee, run	0.6	0.8	0.9	1.2	1.5	2.0	2.5	3.0
Tee, branch	3.0	4.0	5.0	6.0	7.0	10.0	12.0	15.0
Gate valve	0.4	0.5	0.6	0.8	1.0	1.3	1.6	2.0
Balancing valve	0.8	1.1	1.5	1.9	2.2	3.0	3.7	4.5
Plug-type cock	0.8	1.1	1.5	1.9	2.2	3.0	3.7	4.5
Check valve, swing	5.6	8.4	11.2	14.0	16.8	22.4	28.0	33.6
Globe valve	15.0	20.0	25.0	35.0	45.0	55.0	65.0	80.0
Angle valve	8.0	12.0	15.0	18.0	22.0	28.0	34.0	40.0
1 in = 25.4 mm 1 psi = 6.895 kPa 1 degree = 0.01 75 rad								

Table 1805.F Allowance in Equivalent Length of Tube for Friction Loss in Valves and Fittings[1] (ft) (Copper Water Tube)								
Fitting or valve	**Tube Sizes (in)**							
	1/2	**3/4**	**1**	**1 1/4**	**1 1/2**	**2**	**2 1/2**	**3**
45° elbow (wrought)	0.5	0.5	1.0	1.0	2.0	2.0	3.0	4.0
90° elbow (wrought)	0.5	1.0	1.0	2.0	2.0	2.0	2.0	3.0
Tee, run (wrought)	0.5	0.5	0.5	0.5	1.0	1.0	2.0	-
Tee, branch (wrought)	1.0	2.0	3.0	4.0	5.0	7.0	9.0	-
45° elbow (cast)	0.5	1.0	2.0	2.0	3.0	5.0	8.0	1.0
90° elbow (cast)	1.0	2.0	4.0	5.0	8.0	11.0	14.0	18.0
Tee, run (cast)	0.5	0.5	0.5	1.0	1.0	2.0	2.0	2.0
Tee, branch (cast)	2.0	3.0	5.0	7.0	9.0	12.0	16.0	20.0
Compression Stop	13.0	21.0	30.0	-	-	-	-	-
Globe valve	7.5	10.0	12.5	53.0	66.0	90.0	33	40
Gate valve	0.5	0.25	1.0	1.0	2.0	2.0	2.0	2.0

NOTE:
1. From "Copper Tube Handbook" by Copper Development Association, Inc.

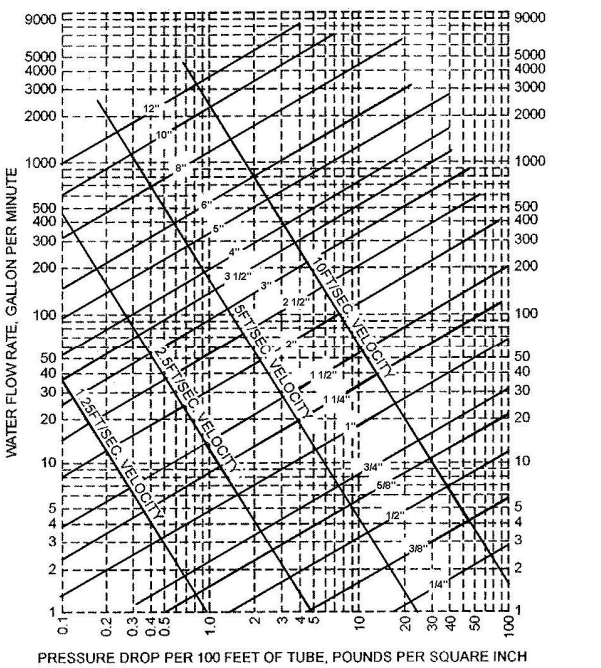

NOTE: FLUID VELOCITIES IN EXCESS OF 5 TO 8 FT/SEC. ARE NOT USUALLY RECOMMENDED

Figure 1805.A.1 – Friction Loss in Smooth Pipe[1]
(Type K, ASTM B88 Copper Tubing)

NOTE:
1. This chart applies to smooth new copper tubing with recessed (Streamline) soldered joints and to the actual sizes of types indicated on the diagram.

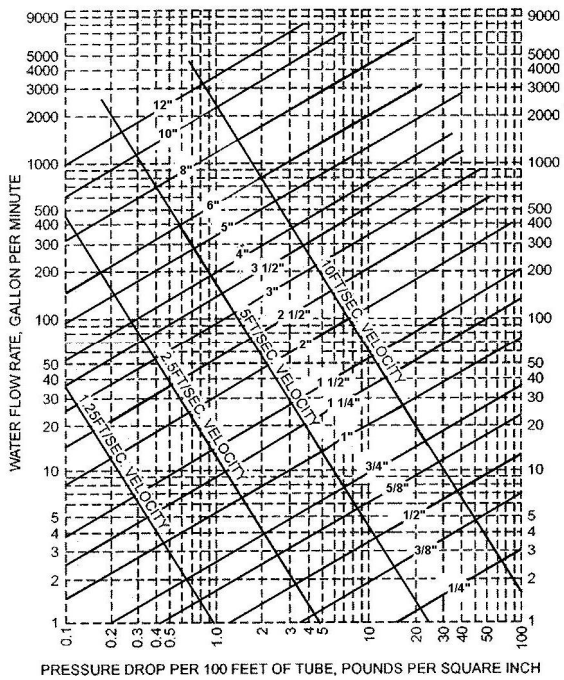

NOTE: FLUID VELOCITIES IN EXCESS OF 5 TO 8 FT/SEC. ARE NOT USUALLY RECOMMENDED

Figure 1805.A.2 – Friction Loss in Smooth Pipe[1]
(Type L, ASTM B88 Copper Tubing)

NOTE:
1. This chart applies to smooth new copper tubing with recessed (Streamline) soldered joints and to the actual sizes of types indicated on the diagram.

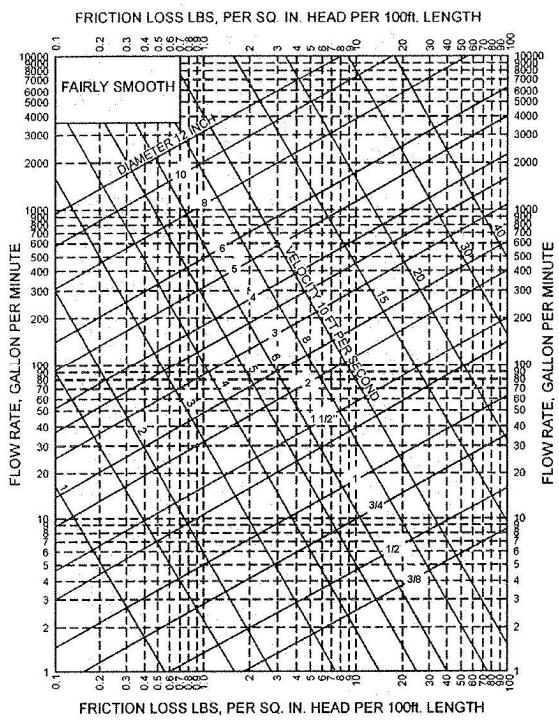

Figure 1805.B – Friction Loss in Fairly Smooth Pipe[1]

NOTE:
1. This chart applies to new steel (fairly smooth) pipe and to actual diameters of standard-weight pipe.

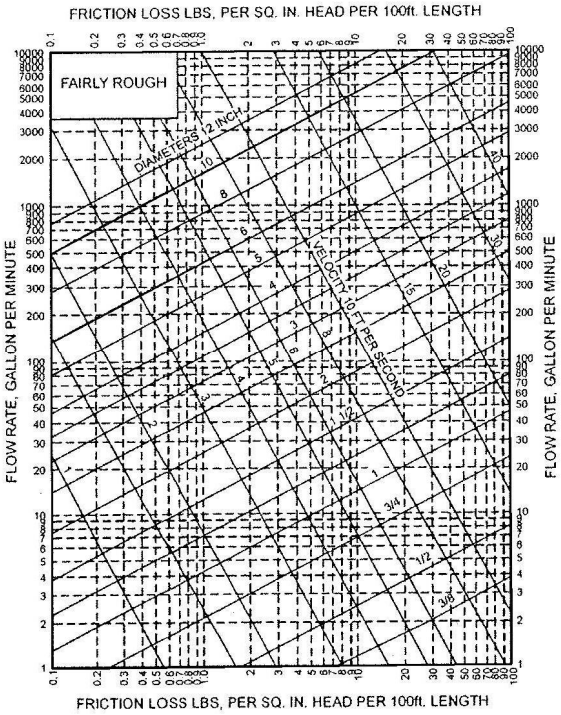

Figure 1805.C—Friction Loss in Fairly Rough Pipe[1]

NOTE:
1. This chart applies to fairly rough pipe and to actual diameters which in general will be less than the actual diameters of the new pipe of the same kind.

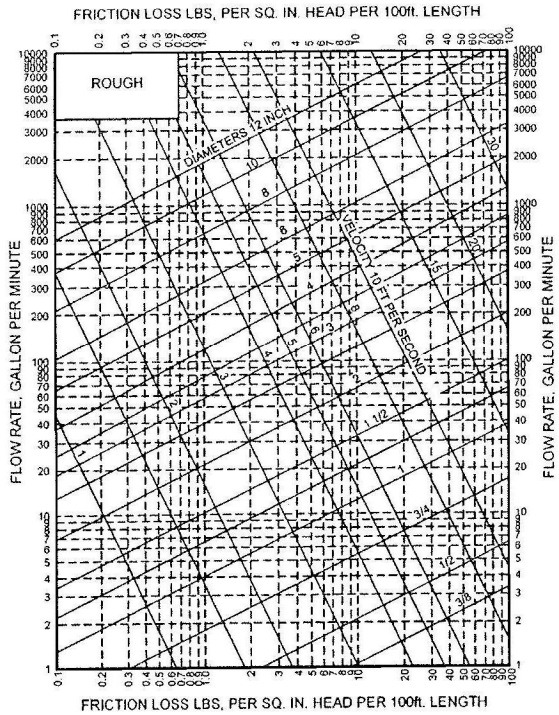

Figure 1805.D – Friction Loss In Rough Pipe[1]

NOTE:
1. This chart applies to very rough pipe and existing pipe and to their actual diameters.

AUTHORITY NOTE: Promulgated in accordance with R.S. 40:4(A)(7) and R.S. 40:5(2)(3)(7)(9)(16)(17)(20).

HISTORICAL NOTE: Promulgated by the Department of Health and Hospitals, Office of Public Health, LR 38:

§1807. Appendix C—Illustrations [formerly Appendix J—Illustrations]

A. The following figures have been included to aid in interpreting this code. The figures are not to be construed as superseding the written text, but merely to illustrate. The various methods indicated diagrammatically do not limit other configurations of design of plumbing, soil, waste and vent systems, water piping, accessories, etc., when in compliance with the written text. It is further suggested that the users of these illustrations refer to the appropriate Sections and standards regarding any of the figures to avoid misunderstanding.

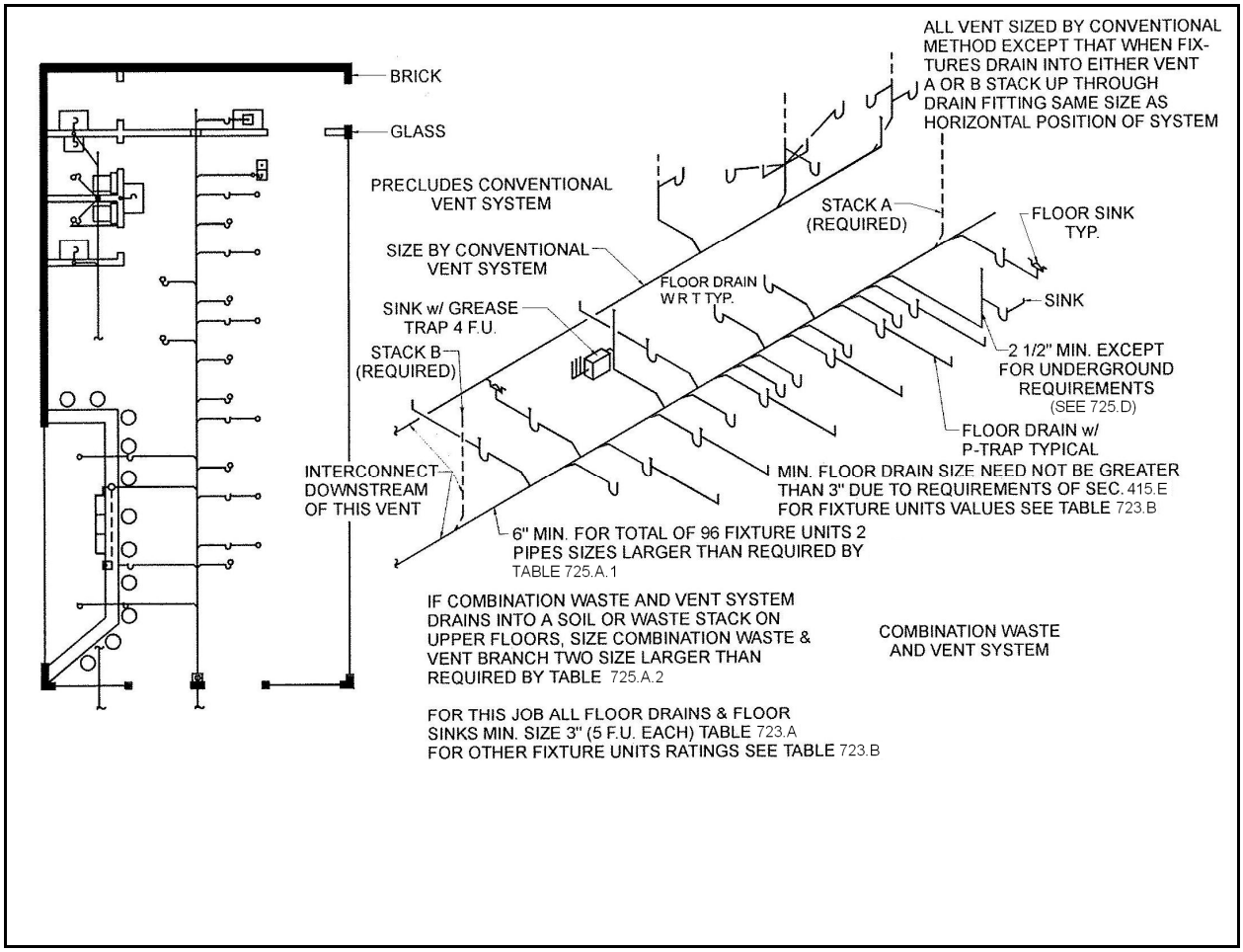

Figure 1—Combination Waste and Vent System

NOTE: A combination waste and vent system is considered an alternate designed plumbing system and requires special approval of the plans and specifications, etc., by the state health officer prior to construction. Refer to the provisions contained in Chapter 12 for any alternate designed plumbing system.

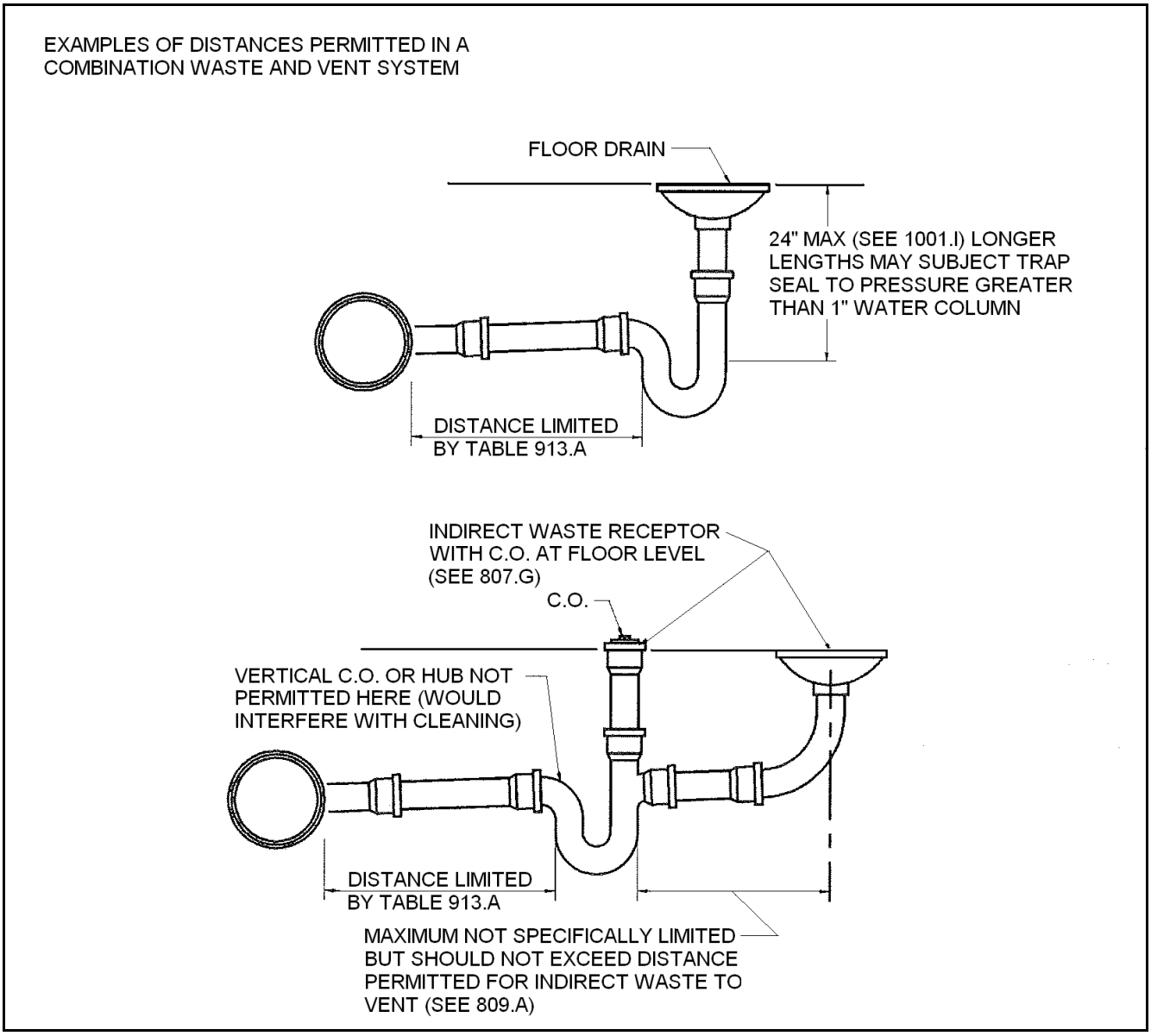

Figure 2—Distances Permitted in a Combination Waste and Vent System

NOTE: A combination waste and vent system is considered an alternate designed plumbing system and requires special approval of the plans and specifications, etc., by the state health officer prior to construction. Refer to the provisions contained in Chapter 12 for any alternate designed plumbing system.

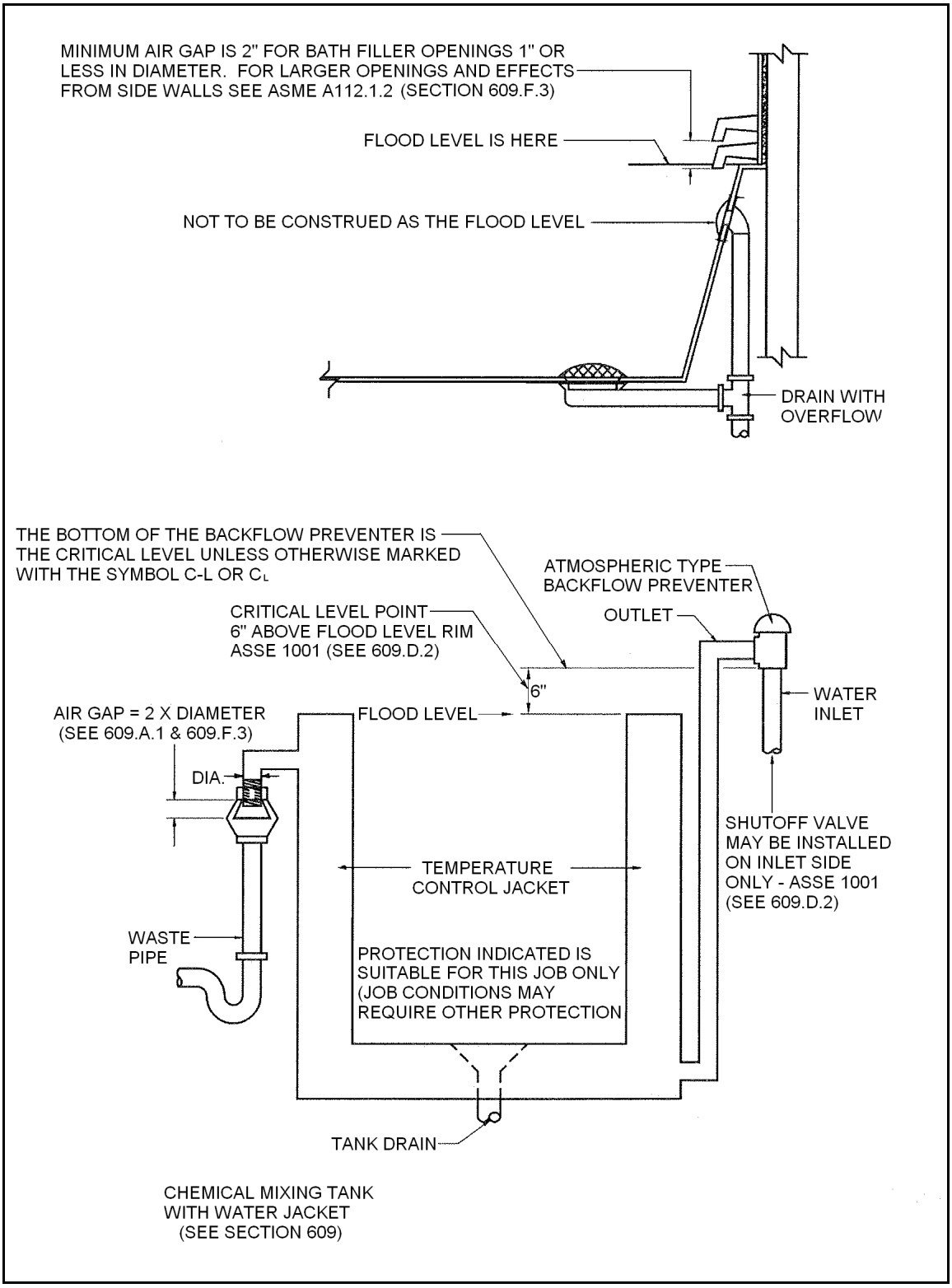

Figure 3—Bathtub and Chemical Mixing Tank Illustrations

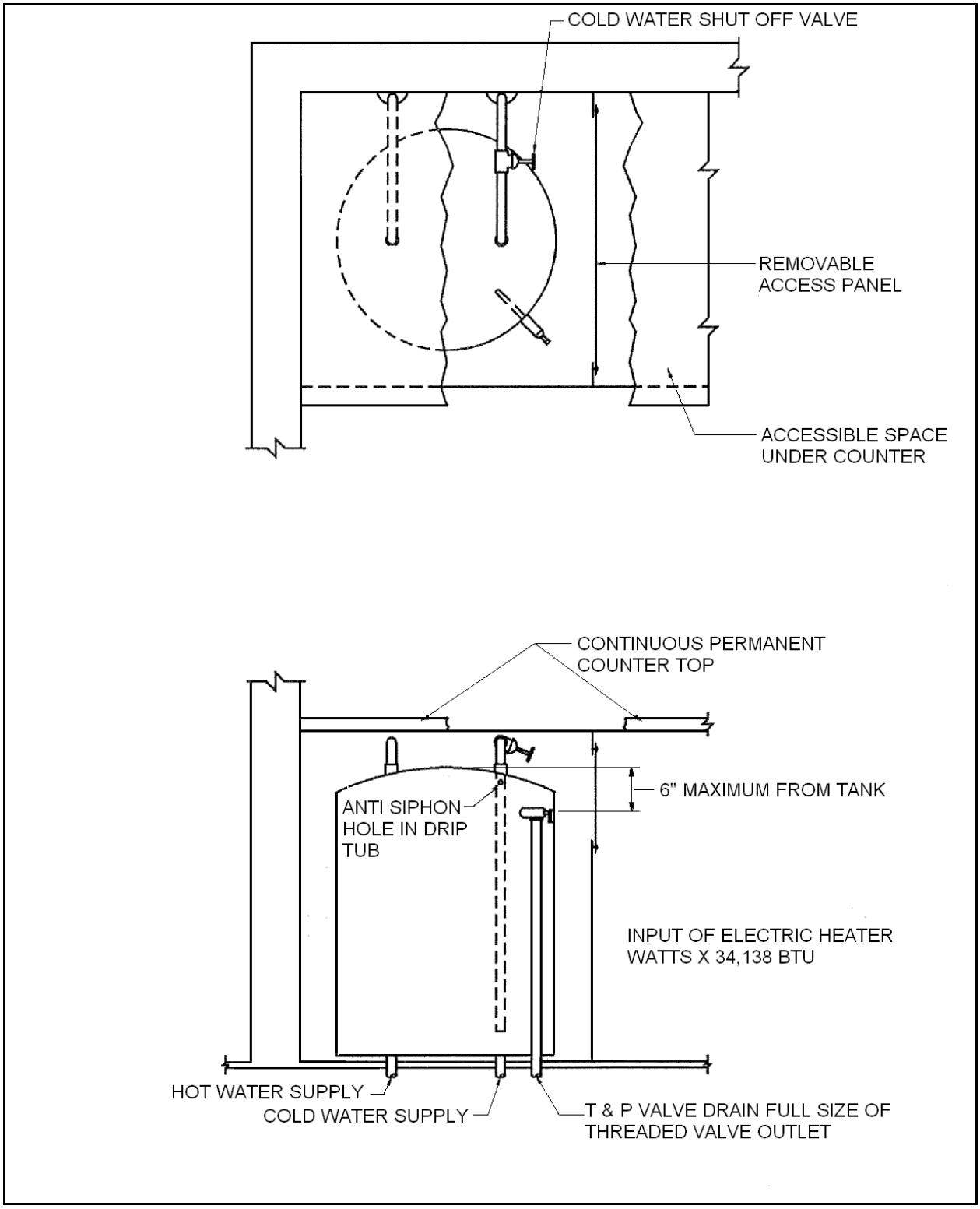

Figure 4—Access to Built-In Water Heater

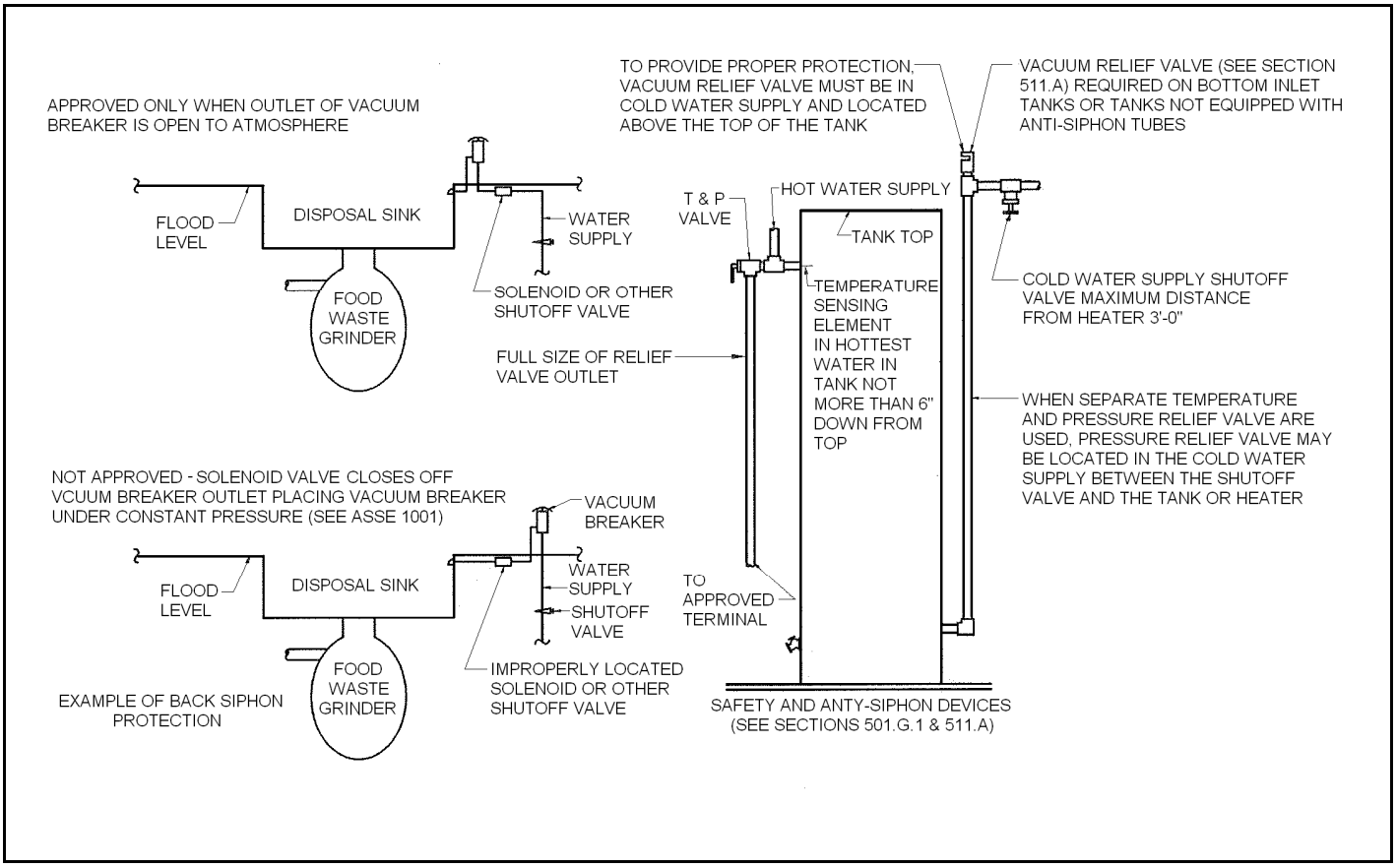

Figure 5—Examples of Back Siphon Backflow Protection

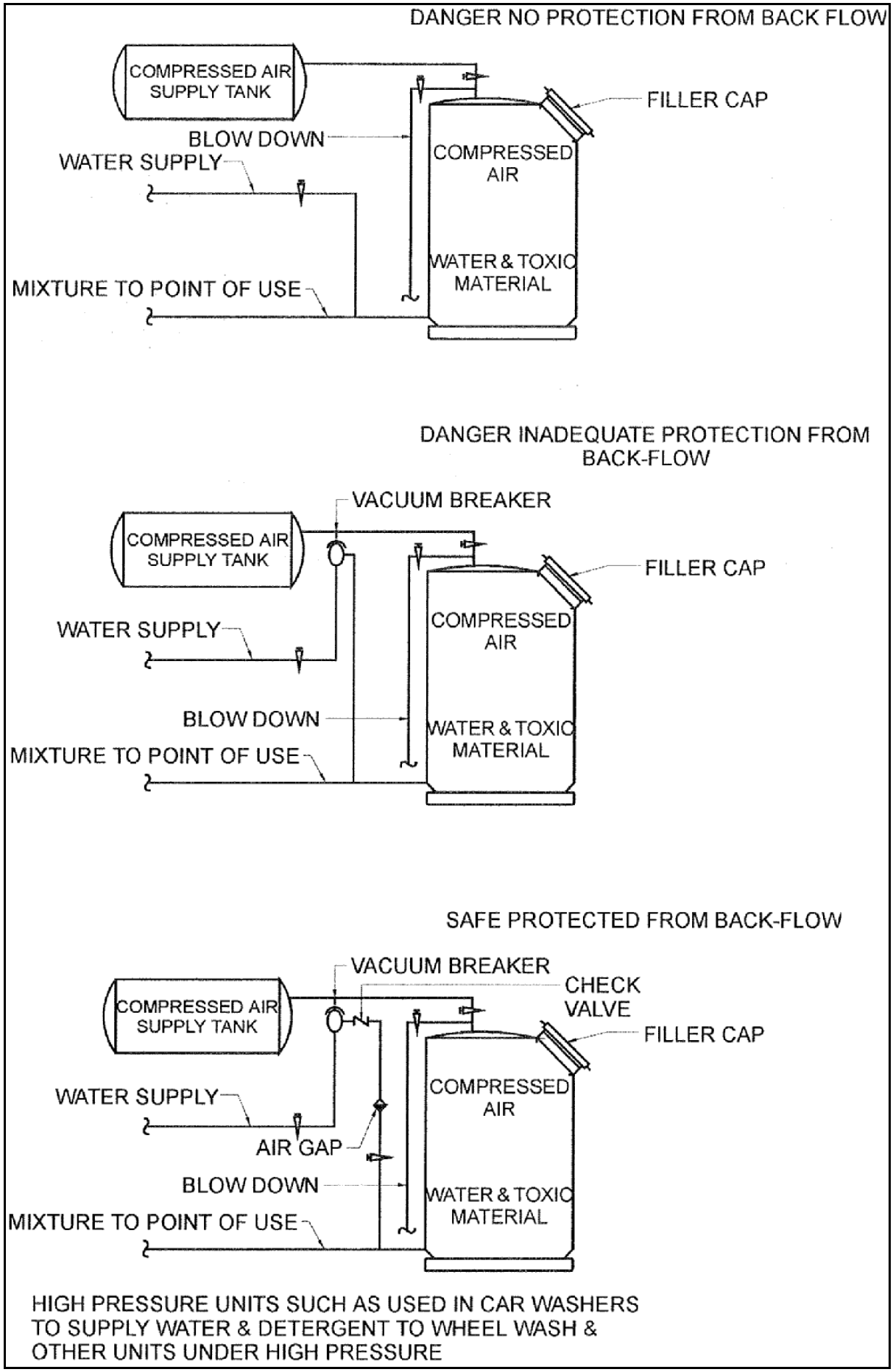

Figure 6 – Examples of Proper and Improper Backflow Protection

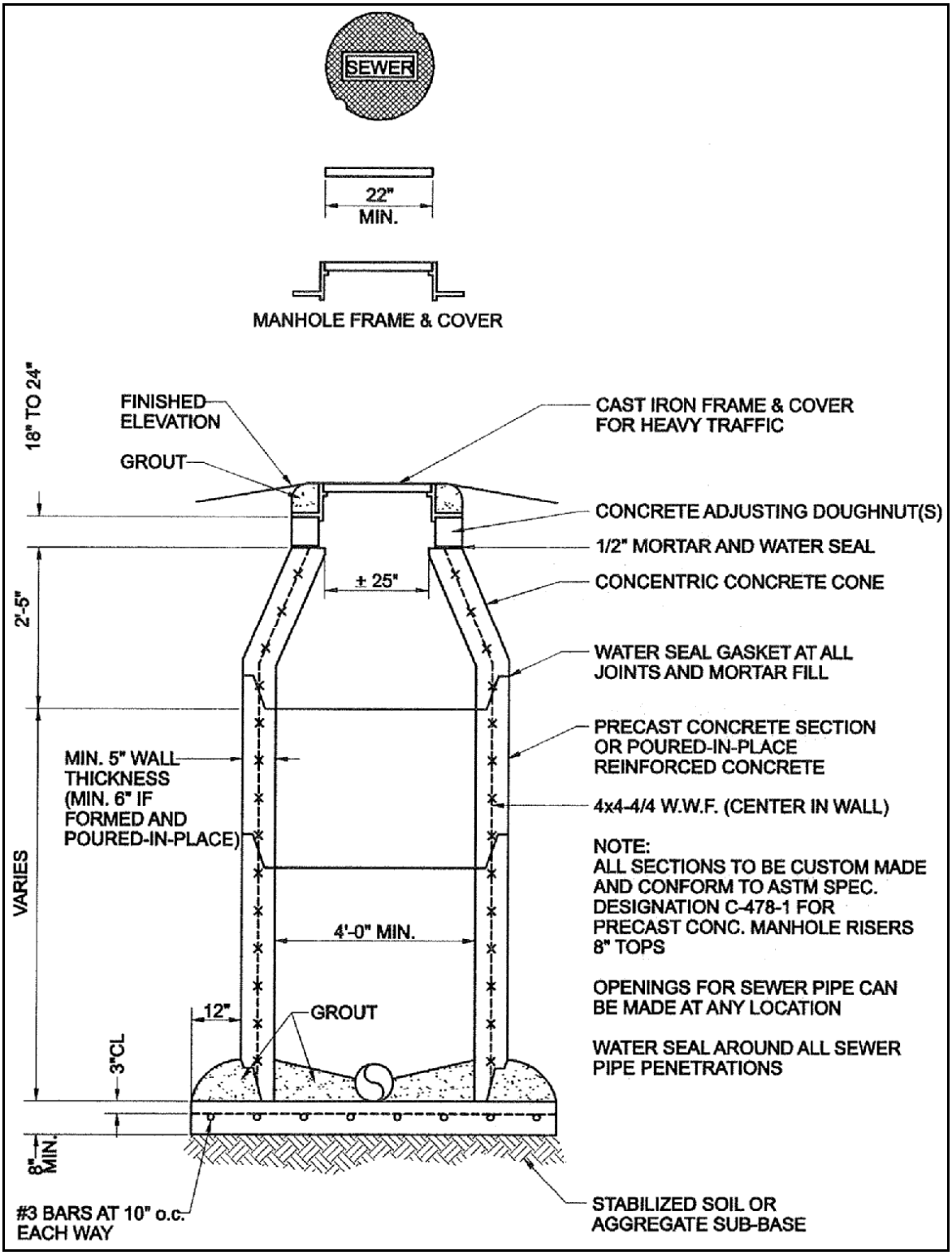

Figure 7—Typical Sewer Manhole

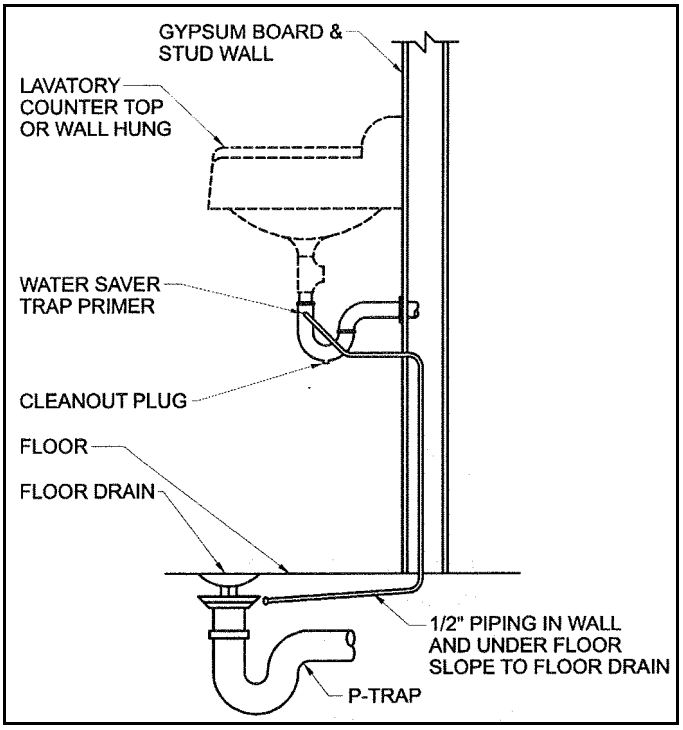

Figure 8—Floor Drain Trap Primer Detail Alternate Formula for the Sizing of Grease Traps

Number of Meals Per Peak Hour[1]	x	Waste Flow Rate[2]	x	Retention Time[3]	x	Storage Factor[4]	=	Interceptor Size (liquid Capacity)
1. Meals Served at Peak Hour								
2. Waste Flow Rate								
a. With dishwashing machine						6 gallon (22.7 L) flow		
b. Without dishwashing machine						5 gallon (18.9 L) flow		
c. Single service kitchen						2 gallon (7.6L) flow		
d. Food waste disposer						1 gallon (3.8L) flow		
3. Retention Times								
Commercial kitchen waste								
Dishwasher						2.5 hours		
Single service kitchen								
Single serving						1.5 hours		
4. Storage Factors								
Fully equipped commercial kitchen						8 hour operation: 1		
……						16 hour operation: 2		
……						24 hour operation: 3		
Single Service Kitchen						……..: 1.5		

Figure 9—Alternate Grease Trap Sizing Formula

Grease Trap Minimum Capacity WITHOUT Garbage Grinder					
Retail Food	Institutions	Grease Trap Size (gallons)	Retail Food	Institutions	Grease Trap Size (gallons)
Usable Square Footage (ft^2)[1]	Estimated People or Meals Served[2]		Usable Square Footage (ft^2)[1]	Estimated People or Meals Served[2]	
Less than 1,001	Up to 50	125	10,401 – 10,600	521 – 530	1,325
1,001 – 1,200	51 – 60	150	10,601 – 10,800	531 – 540	1,350
1,201 – 1,400	61 – 70	175	10,801 – 11,000	541 – 550	1,375
1,401 – 1,600	71 – 80	200	11,001 – 11,200	551 – 560	1,400
1,601 – 1,800	81 – 90	225	11,201 – 11,400	561 – 570	1,425
1,801 – 2,000	91 – 100	250	11,401 – 11,600	571 – 580	1,450
2,001 – 2,200	101 – 110	275	11,601 – 11,800	581 – 590	1,475
2,201 – 2,400	111 – 120	300	11,801 – 12,000	591 – 600	1,500
2,401 – 2,600	121 – 130	325	12,001 – 12,200	601 – 610	1,525
2,601 – 2,800	131 – 140	350	12,201 – 12,400	611 – 620	1,550
2,801 – 3,000	141 – 150	375	12,401 – 12,600	621 – 630	1,575
3,001 – 3,200	151 – 160	400	12,601 – 12,800	631 – 640	1,600
3,201 – 3,400	161 – 170	425	12,801 – 13,000	641 – 650	1,625
3,401 – 3,600	171 – 180	450	13,001 – 13,200	651 – 660	1,650
3,601 – 3,800	181 – 190	475	13,201 – 13,400	661 – 670	1,675
3,801 – 4,000	191 – 200	500	13,401 – 13,600	671 – 680	1,700
4,001 – 4,200	201 – 210	525	13,601 – 13,800	681 – 690	1,725
4,201 – 4,400	211 – 220	550	13,801 – 14,000	691 – 700	1,750
4,401 – 4,600	221 – 230	575	14,001 – 14,200	701 – 710	1,775
4,601 – 4,800	231 – 240	600	14,201 – 14,400	711 – 720	1,800
4,801 – 5,000	241 – 250	625	14,401 – 14,600	721 – 730	1,825
5,001 – 5,200	251 – 260	650	14,601 – 14,800	731 – 740	1,850
5,201 – 5,400	261 – 270	675	14,801 – 15,000	741 – 750	1,875
5,401 – 5,600	271 – 280	700	15,001 – 15,200	751 – 760	1,900
5,601 – 5,800	281 – 290	725	15,201 – 15,400	761 – 770	1,925
5,801 – 6,000	291 – 300	750	15,401 – 15,600	771 – 780	1,950
6,001 – 6,200	301 – 310	775	15,601 – 15,800	781 – 790	1,975
6,201 – 6,400	311 – 320	800	15,801 – 16,000	791 – 800	2,000
6,401 – 6,600	321 – 330	825	16,001 – 16,200	801 – 810	2,025
6,601 – 6,800	331 – 340	850	16,201 – 16,400	811 – 820	2,050
6,801 – 7,000	341 – 350	875	16,401 – 16,600	821 – 830	2,075
7,001 – 7,200	351 – 360	900	16,601 – 16,800	831 – 840	2,100
7,201 – 7,400	361 – 370	925	16,801 – 17,000	841 – 850	2,125
7,401 – 7,600	371 – 380	950	17,001 – 17,200	851 – 860	2,150
7,601 – 7,800	381 – 390	975	17,201 – 17,400	861 – 870	2,175
7,801 – 8,000	391 – 400	1,000	17,401 – 17,600	871 – 880	2,200
8,001 – 8,200	401 – 410	1,025	17,601 – 17,800	881 – 890	2,225
8,201 – 8,400	411 – 420	1,050	17,801 – 18,000	891 – 900	2,250
8,401 – 8,600	421 – 430	1,075	18,001 – 18,200	901 – 910	2,275
8,601 – 8,800	431 – 440	1,100	18,201 – 18,400	911 – 920	2,300
8,801 – 9,000	441 – 450	1,125	18,401 – 18,600	921 – 930	2,325
9,001 – 9,200	451 – 460	1,150	18,601 – 18,800	931 – 940	2,350
9,201 – 9,400	461 – 470	1,175	18,801 – 19,000	941 – 950	2,375
9,401 – 9,600	471 – 480	1,200	19,001 – 19,200	951 – 960	2,400
9,601 – 9,800	481 – 490	1,225	19,201 – 19,400	961 – 970	2,425
9,801 – 10,000	491 – 500	1,250	19,401 – 19,600	971 – 980	2,450
10,001 – 10,200	501 – 510	1,275	19,601 – 19,800	981 – 990	2,475
10,201 – 10,400	511 – 520	1,300	19,801 – 20,000	991 – 1,000	2,500

[1] Retail establishments expected to serve more meals than estimated by usable sq ft shall install the larger size grease trap.
[2] Estimated # of people or meals served is the # of persons or meals served during the largest meal period.

Figure 10—Grease Trap Sizing Chart (Without Garbage Grinder)

Grease Trap Minimum Capacity WITH Garbage Grinder					
Retail Food	Institutions	Grease Trap Size (gallons)	Retail Food	Institutions	Grease Trap Size (gallons)
Usable Square Footage (ft^2)[1]	Estimated People or Meals Served[2]		Usable Square Footage (ft^2)[1]	Estimated People or Meals Served[2]	
Less than 1,001	Up to 50	500	10,401 – 10,600	521 – 530	1,700
1,001 – 1,200	51 – 60	525	10,601 – 10,800	531 – 540	1,725
1,201 – 1,400	61 – 70	550	10,801 – 11,000	541 – 550	1,750
1,401 – 1,600	71 – 80	575	11,001 – 11,200	551 – 560	1,775
1,601 – 1,800	81 – 90	600	11,201 – 11,400	561 – 570	1,800
1,801 – 2,000	91 – 100	625	11,401 – 11,600	571 – 580	1,825
2,001 – 2,200	101 – 110	650	11,601 – 11,800	581 – 590	1,850
2,201 – 2,400	111 – 120	675	11,801 – 12,000	591 – 600	1,875
2,401 – 2,600	121 – 130	700	12,001 – 12,200	601 – 610	1,900
2,601 – 2,800	131 – 140	725	12,201 – 12,400	611 – 620	1,925
2,801 – 3,000	141 – 150	750	12,401 – 12,600	621 – 630	1,950
3,001 – 3,200	151 – 160	775	12,601 – 12,800	631 – 640	1,975
3,201 – 3,400	161 – 170	800	12,801 – 13,000	641 – 650	2,000
3,401 – 3,600	171 – 180	825	13,001 – 13,200	651 – 660	2,025
3,601 – 3,800	181 – 190	850	13,201 – 13,400	661 – 670	2,050
3,801 – 4,000	191 – 200	875	13,401 – 13,600	671 – 680	2,075
4,001 – 4,200	201 – 210	900	13,601 – 13,800	681 – 690	2,100
4,201 – 4,400	211 – 220	925	13,801 – 14,000	691 – 700	2,125
4,401 – 4,600	221 – 230	950	14,001 – 14,200	701 – 710	2,150
4,601 – 4,800	231 – 240	975	14,201 – 14,400	711 – 720	2,175
4,801 – 5,000	241 – 250	1,000	14,401 – 14,600	721 – 730	2,200
5,001 – 5,200	251 – 260	1,025	14,601 – 14,800	731 – 740	2,225
5,201 – 5,400	261 – 270	1,050	14,801 – 15,000	741 – 750	2,250
5,401 – 5,600	271 – 280	1,075	15,001 – 15,200	751 – 760	2,275
5,601 – 5,800	281 – 290	1,100	15,201 – 15,400	761 – 770	2,300
5,801 – 6,000	291 – 300	1,125	15,401 – 15,600	771 – 780	2,325
6,001 – 6,200	301 – 310	1,150	15,601 – 15,800	781 – 790	2,350
6,201 – 6,400	311 – 320	1,175	15,801 – 16,000	791 – 800	2,375
6,401 – 6,600	321 – 330	1,200	16,001 – 16,200	801 – 810	2,400
6,601 – 6,800	331 – 340	1,225	16,201 – 16,400	811 – 820	2,425
6,801 – 7,000	341 – 350	1,250	16,401 – 16,600	821 – 830	2,450
7,001 – 7,200	351 – 360	1,275	16,601 – 16,800	831 – 840	2,475
7,201 – 7,400	361 – 370	1,300	16,801 – 17,000	841 – 850	2,500
7,401 – 7,600	371 – 380	1,325	17,001 – 17,200	851 – 860	2,525
7,601 – 7,800	381 – 390	1,350	17,201 – 17,400	861 – 870	2,550
7,801 – 8,000	391 – 400	1,375	17,401 – 17,600	871 – 880	2,575
8,001 – 8,200	401 – 410	1,400	17,601 – 17,800	881 – 890	2,600
8,201 – 8,400	411 – 420	1,425	17,801 – 18,000	891 – 900	2,625
8,401 – 8,600	421 – 430	1,450	18,001 – 18,200	901 – 910	2,650
8,601 – 8,800	431 – 440	1,475	18,201 – 18,400	911 – 920	2,675
8,801 – 9,000	441 – 450	1,500	18,401 – 18,600	921 – 930	2,700
9,001 – 9,200	451 – 460	1,525	18,601 – 18,800	931 – 940	2,725
9,201 – 9,400	461 – 470	1,550	18,801 – 19,000	941 – 950	2,750
9,401 – 9,600	471 – 480	1,575	19,001 – 19,200	951 – 960	2,775
9,601 – 9,800	481 – 490	1,600	19,201 – 19,400	961 – 970	2,800
9,801 – 10,000	491 – 500	1,625	19,401 – 19,600	971 – 980	2,825
10,001 – 10,200	501 – 510	1,650	19,601 – 19,800	981 – 990	2,850
10,201 – 10,400	511 – 520	1,675	19,801 – 20,000	991 – 1,000	2,875

[1] Retail establishments expected to serve more meals than estimated by usable sq ft shall install the larger size grease trap.
[2] Estimated # of people or meals served is the # of persons or meals served during the largest meal period.

Figure 11—Grease Trap Sizing Chart (With Garbage Grinder)

AUTHORITY NOTE: Promulgated in accordance with R.S. 40:4(A)(7) and R.S. 40:5(2)(3)(7)(9)(16)(17)(20).

HISTORICAL NOTE: Promulgated by the Department of Health and Hospitals, Office of Public Health, LR 38:

§1809. Appendix D—Vacuum Drainage Systems [formerly Appendix K—Vacuum Drainage Systems]

A. System. A vacuum drainage system shall comply with the following.

1. General. Since a vacuum drainage system is considered an alternate designed plumbing system, the requirements of Chapter 12 shall apply and such systems shall be considered on an individual basis.

2. System Design. Vacuum drainage systems shall be designed in accordance with manufacturer's specifications. The system arrangement, including piping, tank assemblies, vacuum pump assembly and other components necessary for proper function of the system shall be in accordance with manufacturer's specifications. In general, vacuum drainage systems may be considered for approval by the state health officer for use on handling island display refrigerator/freezer condensate wastes in grocery stores. Such wastes from

display refrigerators/freezers handling meat or dairy products or other products containing fats, grease or oils shall discharge, in an approved manner, through an approved grease trap prior to discharge into the sanitary sewer system. Also, any food items stored below any portion of a vacuum drainage system (for example, in-the-ceiling vacuum waste piping located above food shelves or food preparation areas) shall be protected from potential contamination by adequate shielding to intercept any potential drips (in accord with LAC 51:XXIII.1503.A.6). Vacuum drainage systems for liquid wastes from other types of plumbing fixtures, such as sinks, water closets, etc., are discouraged. A standby emergency generator, permanently wired to automatically operate the vacuum pump motor upon lost of the normal power source, should be installed to ensure continuous operation of a vacuum drainage system.

3. Plans and specifications. Plans and specifications for such systems shall be designed by a Louisiana Registered Professional Engineer registered in either civil or mechanical engineering and submitted to the state health officer for review and approval prior to installation.

B. Fixtures. Gravity type fixtures used in vacuum drainage systems shall comply with Chapter 4.

C. Drainage Fixture Units. The drainage fixture load of gravity drainage systems which discharge into or receive discharge from vacuum drainage systems shall be based upon values in Chapter 7.

D. Water Supply Fixture Units. Water supply fixture load shall be based upon values in Table 1805.B. The load requirement of a vacuum type water closet shall be determined per manufacturer's specifications.

E. Traps and Cleanouts. Gravity type fixtures shall be provided with traps and cleanouts in accordance with Chapters 7 and 10.

F. Materials. Vacuum drainage pipe, fitting and valve materials shall be as specified by the vacuum drainage system manufacturer and as listed in this Part.

G. Tests and Demonstrations. After completion of the entire system installation, the system shall be subjected to a vacuum test of 19 inches of mercury (64 kPa) and shall be operated to function as required by the state health officer and/or the local plumbing official and the manufacturer. Tests shall be witnessed by the state health officer and/or the local plumbing official. The results of such tests shall be submitted to the state health officer and the local plumbing official.

H. Written Instructions. Written instructions for the operations, maintenance, safety and emergency procedures shall be provided to the building owner and shall be available for inspection by the state health officer and the local plumbing official at any time.

AUTHORITY NOTE: Promulgated in accordance with R.S. 40:4(A)(7) and R.S. 40:5(2)(3)(7)(9)(16)(17)(20).

HISTORICAL NOTE: Promulgated by the Department of Health and Hospitals, Office of Public Health, LR 38:

§1811. Appendix E - Alternate Designed Plumbing Systems
[formerly Appendix L—Alternate Designed Plumbing Systems]

A. General. Pursuant to the requirements of Chapter 12, the approval of alternate designed plumbing systems shall be considered on an individual basis.

1. Scope. The provisions of this appendix shall assist in governing the materials, design and installation of non-prescriptive plumbing systems, also known as alternate designed plumbing systems. In accord with the requirements of Chapter 12, any one of the systems mentioned in this appendix shall be designed by a Louisiana Registered Professional Engineer registered in either civil or mechanical engineering. Any alternate designed plumbing system shall not be installed until the plans and specifications have been reviewed and approved by the state health officer, pursuant to the requirements of Chapter 12.

2. General System Provisions. Discharge pipe systems shall comprise the minimum of pipework necessary to carry away the foul water from the building quickly and quietly, with freedom from nuisance or risk of injury to health.

B. Definitions

Discharge Pipe—a pipe which conveys the discharges from *plumbing fixtures* or appliances.

Discharge Unit—a unit so chosen that the relative load-producing effect of *plumbing fixtures* can be expressed as multiples of that unit. The *discharge unit* rating of a *fixture* depends on its rate and duration of discharge and on the interval between discharges. It is not a simple multiple of a rate of flow and is a different method of assessment than the *fixture unit* applicable to other Chapters of this Part and the two (*fixture unit* and *discharge unit*) cannot be interchanged.

Fixture tail piece or connection—see definition under §203.

Ventilating Pipe—a pipe provided to facilitate the circulation of air within the system and to protect *trap seals* from excessive pressure fluctuation.

C. Combination Waste and Vent System. A combination waste and vent system is an alternate designed plumbing system; thus, the requirements of Chapter 12 apply to any combination waste and vent system. Combination waste and vent systems shall conform with the following.

1. Approval. Plans and specifications for each combination waste and vent system shall be submitted to the state health officer for review and approval. Written approval of such plans and specifications shall be obtained before any installation is started.

2. Limits. The following limits shall be applied to any combination waste and vent system.

a. A combination waste and vent system is limited to dishwashers, floor sinks, indirect waste receptors, floor drains or similar fixtures which waste at or below floor level and where the fixtures are not adjacent to walls or partitions thus making it impractical to provide conventional venting. It consists of the installation of waste piping in which the trap of the fixture is not individually vented.

b. Caution must be exercised to exclude appurtenances delivering large quantities of water or sewage such as pumps, etc., in a combination waste and vent system in order that adequate venting will be maintained. Water closets, clinical sinks, and urinals shall not waste into a combination waste and vent system. Sinks, lavatories, etc., that waste above floor level should not be allowed to waste into a combination waste and vent system.

3. Dishwashers. Dishwashers, three-compartment sinks and other scullery sinks in commercial buildings shall drain through a grease interceptor sized in accordance with

this Part and they shall only then be allowed to discharge into the combination waste and vent system via a floor sink through an air gap (drainage system) or air break (drainage system). The purpose of this requirement is to keep grease out of the combination waste and vent system since such a system is not self-scouring due to the over-sized piping required.

4. General Design. The general design elements of a combination waste and vent system shall be as follows.

a. Every waste pipe and trap in this system shall be at least two pipe sizes larger than the conventional plumbing size required in Chapter 7, and at least two pipe sizes larger than any fixture tail piece or connection. In addition, the fixture tail piece or connection itself shall remain normal size in order to limit the rate of flow and amount of wastewater allowed to enter the horizontal combination waste and vent waste pipe. In order to maintain a continuous vent space above the liquid waste within the horizontal waste pipe, all fixtures shall waste into the horizontal combination waste and vent waste pipe from the horizontal only. The fixture drain length to the horizontal combination waste and vent waste pipe shall be limited by Table 913.A. Floor sinks shall be connected through a running trap two pipe sizes larger than the sink outlet. A vertical cleanout extension shall be provided on the top of the inlet side of the running trap and shall be accessible at floor level for rodding out the trap and fixture drain. Floor sink and waste piping from the floor sink to the trap shall be sized for the total fixture units draining thereto, based on Table 723.B, but in no case shall the line be less than 2-inch (51 mm) waste pipe when piping is underground. In addition, the length of such piping should not exceed the distance permitted for indirect waste to vent (see §809.A.2, and Figure 2 of §1807.A).

b. A vent shall be provided at the upstream end of each branch, washed over or under by the last fixture on the branch. No vent shall take off from the horizontal waste branch at an angle of less than 45 degrees (0.785 rad) from the horizontal unless washed by a fixture. A vent shall be located at all points where branches intersect. A vent shall be located downstream from all fixtures in the system, in addition to the upstream vent, separating the combination waste and vent system from all other systems in the building. All vents in a combination waste and vent system shall be provided with an accessible above-grade$_{(g)}$ cleanout. Line cleanouts for horizontal waste piping shall be provided as required in Chapter 7. Drainage fixture pattern fittings shall be provided for all vent piping below the level of 6 inches (152 mm) above the flood-level rim of the highest fixture connection. No fixtures other than those permitted in §1811.C.2 shall discharge into any branch or portion of this system. See Figures 6 and 7 of §1807, Appendix C.

c. Caution shall be used in the design of the system to assure that the vertical distance from fixture or drain outlet to trap weir does not exceed 24 inches (610 mm). Long runs shall be provided with additional relief vents located at intervals of not more than 100 ft (30.5 m) to equalize pressure in the system.

5. Size of Vents. The size of vents shall be in accordance with requirements of §937.B and Table 937.B, but the internal cross-sectional area of the vent shall be not less than one-half of the internal cross-sectional area of the waste pipe served (normally, measured in square inches), except that the vents shall be the same size as the waste branch to a point at least 6 inches (152 mm) above the flood-level rim of the highest fixture connected before reduction, in accordance with Table 937.B.

6. Receptor Drain Size. Indirect waste receptors shall be sized for the fixture units draining thereto, regardless of other requirements of this Part.

D. Single Stack Discharge and Ventilating Systems

1. Approval. The purpose of this Subsection is to make provisions for the design and installation of a single stack discharge and ventilating plumbing system which is not otherwise allowed in this Part. In accord with Chapter 12, the plumbing official shall require that the owner submit necessary plans and specifications to the state health officer by a Louisiana Registered Professional Engineer registered in either civil or mechanical engineering.

2. Tests. The single stack discharge and ventilating system shall be tested in accordance with §1205.C.

3. General. The following general provisions are applicable to single stack discharge and ventilating systems.

a. Trap Function. To prevent exchange of air between the discharge pipe system and the inside of the building, a trap having an adequate water seal shall be provided for each fixture (see §1811.D.4). The discharge piping system shall be so designed as to retain adequate water seals in all traps under normal pressure fluctuations caused by discharge from fixtures (see §1205.C). For design purposes, the effects of the flow of water in the branch connecting the fixture to the stack, and the flow of water down the stack, shall be considered separately. See §§1811.D.3.b and 1811.D.3.c below.

b. Seal Loss (Branch Effect). Seal losses produced by flow in a branch depend on the following:

i. the design of the fixture (funnel shaped fixtures increase the chance of self-siphonage); and,

ii. the length and fall (slope or gradient) and the diameter of the pipe.

(a). Branch effects are not affected by the height of the building and they can therefore be controlled by limiting the length and the fall of the branch.

c. Seal Loss (Stack Effect). Seal losses produced by flow down the stack depend on the following:

i. the flow load (which depends on the number of fixtures connected to the stack and the frequency with which they are used);

ii. the diameter of the stack; and

iii. the height of the stack.

(a). Excessive seal losses can be prevented by choosing a size of stack appropriate to the height of the building and to the number of fixtures connected to it.

d. Fixture Layout. Where the layout of fixtures is suitable, careful design and installation can lead to considerable economies in pipework by eliminating the need for separate ventilating pipes (see 1811.D.6). Where these requirements cannot be followed, traps shall be ventilated by pipes of adequate size as described in 1811.D.7.

e. System Design. Consideration shall be given in design to the following points which, in addition to being good general practice, will also obviate trouble from the foaming of detergents.

i. Where practicable, all fixtures shall be connected to one main stack which is at least 4 inches in

diameter except for one story buildings where a 3-inch stack may be satisfactory (see §1811.D.6 and Table 1811.D.5.5B).

ii. Where sinks are connected to a separate stack, the stack shall be larger than normal (a minimum of 4- inch diameter for buildings over five stories) and connected directly to the building drain.

iii. For over two sinks, stacks shall be (when one sink is over another on separate floor levels) a minimum of 2 1/2-inch diameter.

iv. The interconnection of stacks is not permitted except when fixtures below such interconnection are vented as required elsewhere in this Part.

v. For buildings more than five stories high, ground floor fixtures shall be connected separately to the building drain, and vented back into the main discharge stack above the fixtures on the floor above, or the vent shall be connected with a main ventilating stack when such stack is required by Table 1811.D.6C.

vi. Bends and offsets in vertical stacks are prohibited.

f. Jointing and Support. The selection of materials, their jointing and support shall be in consideration of the effects of possible settlement, thermal movement, and corrosion (see §1811.D.9). Some materials may require protection against mechanical damage.

g. Access. There shall be adequate provision for access to pipework, and the embedding of joints in the structure shall be avoided (see §§1811.D.8 and 1811.D.10).

4. Traps. Traps shall meet the following requirements.

a. General. The entry of foul air from the drainage system into the building is prevented by the installation of suitable traps which are of self-cleansing design. A trap which is not an integral part of a fixture shall be attached to and immediately beneath the fixture outlet and the bore of the trap shall be smooth and uniform throughout.

b. Diameters. The internal diameters of traps shall be not less than those given in Table 1811.D.4.

Table 1811.D.4
Minimum Internal Diameters of Traps

Type of Domestic Appliance	Min. Internal Diameter (in.)
Lavatory	1 1/4
Sink	1 1/2
Bathtub	1 1/2 or 2[1]
Shower	2
Wash tub	1 1/2
Kitchen waste disposal unit	1 1/2
(tubular trap is essential)	
1 in = 25.4 mm	

NOTE:
1. See Figures 1811.D.5.4A and 1811.D.5.4B and Table 1811.D.5.5A.

c. Depth of Seals. Traps of water closets shall have a minimum water seal of 2 inches (51 mm); traps of other fixtures shall have a minimum water seal of 3 inches (76 mm) for pipes up to and including 2 inches in diameter and 2-inch minimum water seal for pipes over 2 inches in diameter.

5. Discharge Pipes. Discharge pipes shall meet the following requirements.

a. Diameters. The internal diameter of a horizontal discharge pipe (fixture drain) shall normally be that of the trap to which it is attached, and in no case less, except that no fixture drain shall be less than 1 1/2-inch diameter.

b. Branch Gradients. The fall or slope of discharge pipes shall be adequate to drain the pipe efficiently and in no case less than shown in Table 1811.D.5.5C (see §1811.D.5.e).

c. Bends, Branches and Offsets. All bends, branches and offsets shall be of easy radius and there shall be no restriction in the bore of the pipe.

d. Prevention of Cross Flow. To prevent water closet discharge from backing up a bath waste line, the latter shall be connected to the stack with its center line either at, above, or at least 8 inches (203 mm) below the center line of the water closet branch (see Figure 1811.D.5.4A). Where this cannot be achieved, a parallel branch may be used (see Figure 1811.D.5.4B). Alternatively, the level of the water closet branch connection may be modified as above by dotted lines in Figure 1811.D.5.4B.

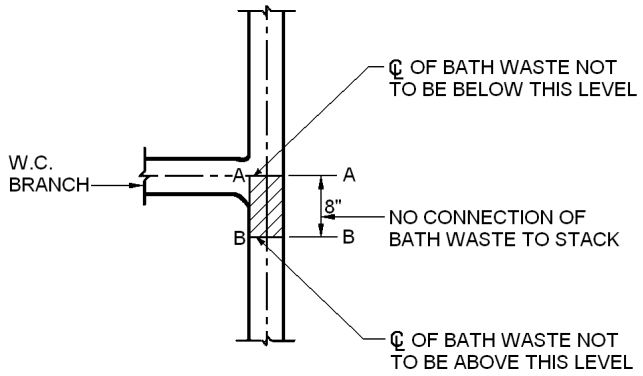

Figure 1811.D.5.4A

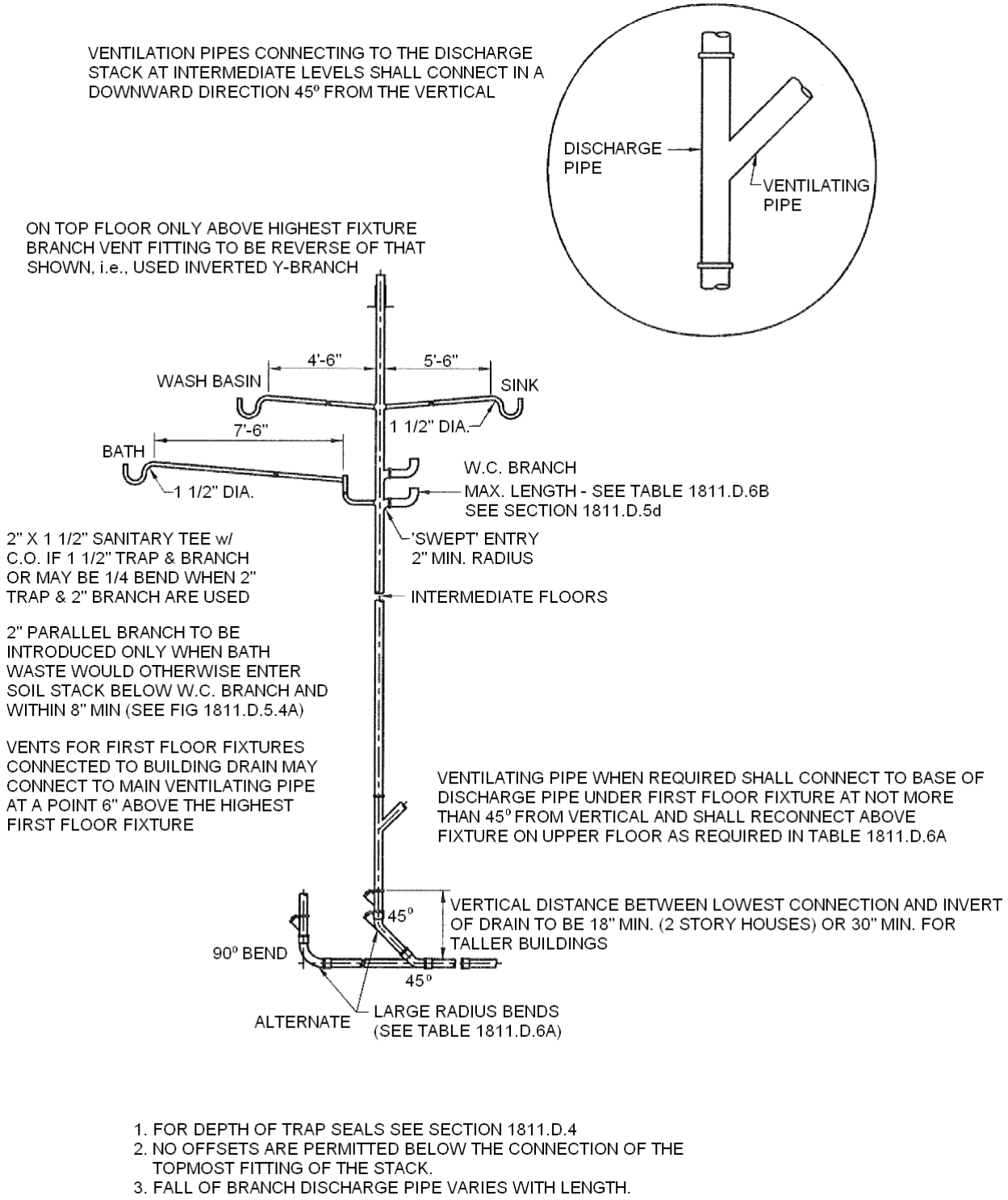

Figure 1811.D.5.4B

e. Pipe Capacities. Discharge unit values for plumbing fixtures are given in Table 1811.D.5.5A. For other fixtures the discharge unit value shall be taken as that given in Table 1811.D.5.5A for a fixture with the same diameter trap with a comparable use interval. Where other use intervals are expected, the appropriate discharge unit value may be determined since the values given in Table 1811.D.5.5A show that the discharge unit value is inversely proportional to the use interval, i.e., if the use interval is doubled, then the discharge unit value is halved. The discharge unit values of all fixtures contributing to flow in a pipe shall be added and the appropriate pipe size (and fall or slope) chosen from Table 1811.D.5.5B for vertical stacks or Table 1811.D.5.5C for the building drain or its horizontal branches.

f. Waste Disposal Units. Special precautions are necessary where kitchen or food waste disposal units are connected to the discharge pipe system. The discharge pipe from such a unit shall connect directly to the main discharge pipe without intermediate connection with any other discharge pipe. Tubular traps shall always be used and any instructions as to installation given by the manufacturer shall be observed. To avoid hot grease being carried into discharge pipes and drains, where it might build up and cause blockage, waste disposal units shall always be automatically flushed with cold water in order to solidify grease before it enters the drainage system.

Table 1811.D.5.5A
Plumbing Fixture Discharge Unit Values

Type Fixture	Intervals between use in minutes	Discharge unit values
Tank Type W.C.	20	15
Sink	25	8
Wash Basin	25	3
Bathtub	75	8
Shower Stall	75	4
Garbage Disposal	25	4
1 fixture group consisting of 1 W.C., 1 Sink, 1 Tub and 1 Lavatory		20

Table 1811.D.5.5B
Maximum Number of Discharge Units Allowed on Vertical Stacks[1,2]

Nominal Internal Diameter of Pipe (in.)	Discharge Units
2	20 (No W.C.)
3	200 (No W.C.)
4	850
5	2700
6	6500
1 in = 25.4 mm	

NOTES:
1. The capacity of a vertical discharge pipe (stack) is limited by the need to preserve a large air core to prevent excessive pressure fluctuation. The flow capacity of a stack may therefore be less than that of a pipe of the same diameter laid at a steep fall.
2. Discharge pipes sized by this method give the minimum size necessary to carry the expected flow load. Separate ventilation pipes may be required (see §1811.D.7). It may be worthwhile to consider over sizing the discharge pipes to reduce the ventilating pipework required.

Table 1811.D.5.5C
Maximum Number of Discharge Units[1,2]
Connected to Building Drain or Building Sewer

Nominal Internal Diameter of Pipe (in.)	Slope or Fall Per Foot (in.)		
	1/8	1/4	1/2
2	—	10	26
3	40	100	230
4	30	430	1,050
5	780	1,500	3,000
6	2,000	3,500	7,500
1 in = 25.4 mm			

NOTES:
1. Discharge pipes sized by this method give the minimum size necessary to carry the expected flow load. Separate ventilation pipes may be required (see §1811.D.7). It may be worthwhile to consider over sizing the discharge pipes to reduce the ventilating pipework required.
2. Building sewer sizes start at 4 inches.

6. Design of Pipe Systems for Dwellings. The design of a single stack discharge and ventilating system for dwellings shall conform with the following.

a. General. In dwellings only, the choice and lay-out of fixtures and their waste pipes may follow the recommendations for simplified systems as provided in this Subsection. Simplified systems for other types of buildings may be possible but are not provided for in this Part.

b. Design of Single Branches and Fittings. The design of single branches and fittings shall comply with the following.

i. Branch discharge waste pipes (fixture drains) serving plumbing fixtures shall have a uniform shallow fall or slope and the inlet to the stack shall be of a sanitary pattern and have a sweep of not less than 1-inch (25.4 mm) radius. Any horizontal change of direction in a fixture drain shall be of long radius and vertical changes of direction are prohibited.

ii. Water closet branch inlets to the stack shall be swept in the direction of flow with a radius at the invert of not less than 2 inches (51 mm). Entries at 45 degrees (0.785 rad) from the vertical are considered equivalent.

iii. Detailed provisions for the design of single fixture branch pipes (fixture drains) and fittings are given in Table 1811.D.6A and Table 1811.D.6B.

Table 1811.D.6A
Design of Single Branches and Fittings

Component	Design Requirements	Possible Problem
Bend at foot of stack	Bend to be of "large radius", i.e., 6-inch minimum root radius or, if adequate vertical distance is available, two "large radius" 45 bends are to be preferred. Vertical distance between lowest branch connection and invert of drain to be at least 18 inches for a two story house and 30 inches for taller dwellings. Where this distance cannot be achieved, ground floor fixtures shall be connected directly to the building drain and vented as provided for in other Chapters of this Part. See Figure 1811.D.5.4B.	Back pressure at lowest branch, foaming of detergents
W.C. branch connection to stack	Water closet connections shall be swept in the direction of flow with radius at the invert of not less than 2 inches. Fittings in other materials shall have the same sweep as cast iron fittings. The length of unvented water closet is closet branches shall be limited by the diameter of the branch piping: 6 ft for 3-inch diameter, 10 ft for 4-inch diameter.	Induced siphonage at lower level in the stack when water closet is discharged

Table 1811.D.6A Design of Single Branches and Fittings		
Component	**Design Requirements**	**Possible Problem**
Lavatory waste 1 ¼ -inch trap and 1 ½ -inch minimum waste pipe. Lavatories with 1 ½ -inch P.O. plugs may be installed as provided for sink waste.	"P" traps shall be used. The maximum fall of the waste pipe shall not exceed the hydraulic gradient of the pipe. For the maximum distance between the stack and trap weir see Table 1811.D.6B. Any bends on plan shall be of not less than 3-inch radius at the center line. Waste pipes longer than the recommended maximum length shall be vented. As an alternative, 2-inch diameter waste pipes may be used so long as the hydraulic gradient is not exceeded, but additional maintenance may be necessary to maintain the bore.	Self-siphonage
Bath waste 1 ½ -in. trap and 1 ½ -in. waste pipe	"P" traps shall be used (a 2-inch parallel branch, when required shall not be considered a violation of requirements of other Sections of this Part, when its vertical length does not exceed 12 1/2 inches, and the center line of the parallel branch is not more than 12 1/2 inches from the stack). Owing to the flat bottom of a bath, the trailing discharge normally refills the trap and the risk of self-siphonage is much reduced. Waste pipes 7 ft 6 in. long at a fall or slope of 1/4 in./ft have been used successfully. Position of entry of bath waste into stack to be as shown in Figure 1811.D.5.4A.	Self-siphonage
Sink Waste 1 ½ -in trap and 1 ½ -in waste pipe	"P" traps shall be used. Owing to the flat bottom of a sink, the trailing discharge normally refills the trap and the risk of self-siphonage is much reduced. Fall or slope of 1/4 in./ft shall be maintained. For maximum length, see Table 1811.D.6B. A sink with 1 1/2-inch tail piece may be drained with a 2-inch horizontal branch not exceeding 8 feet in length. When a 2-inch branch is used, the trap outlet shall connect to a 2 x 1 1/2 inches reducing fitting. An opening into the branch larger than 1 1/2 inches will not be permitted except for a cleanout.	Self-siphonage

1 in = 25.4 mm

NOTE:
1. Where the length or fall of the discharge pipe serving a waste fixture is greater than the recommended maximum in this table, the discharge pipe shall preferably be vented (see §1811.D.7) or a larger diameter discharge pipe shall be used. This may have a maximum length of 10 ft.

Table 1811.D.6B Distance From Trap Weir to Stack or Other Ventilating Pipe	
Size of Fixture[1] Drain (in.)	**Distance Trap to Stack or Vent**
Note 4	4 ft 6 in.
1 1/2	5 ft 6 in.[2]
2	7 ft 6 in.[3]

1 in = 25.4 mm

NOTES:
1. Minimum size.
2. Other than bath waste.
3. For bathtubs see Table 1811.D.6A.
4. 1 1/2-inch fixture drains required for lavatories with 1 1/4-inch traps.

c. Design of Main Pipework.

i. Design details for stacks of various diameters are given below. The choice of design will depend on the space taken up by the pipes and the ease with which they can be accommodated in the building.

ii. An offset in the stack above the topmost connection to the stack has little effect on the performance of the system. Offsets below the topmost connection should be avoided lest extra ventilating pipes be necessary to maintain adequate water seals.

d. 3-Inch Stacks. 3-inch stacks in a single stack system are limited to fixtures other than water closets and to fixtures with maximum drain sizes of 2 inches.

e. 4-Inch Stacks. For details of ventilating pipes see Table 1811.D.6C.

f. 5-Inch Stacks with No Vents (Single Stack System). Suitable for buildings up to 12 stories high where the stack serves one group of fixtures on each floor, or up to 10 stories high where the stack serves up to two groups of fixtures on each floor.

g. 6-Inch Stacks with No Vents (Single Stack System). Suitable for buildings up to at least 20 stories high with not more than two groups of fixtures on each floor.

Table 1811.D.6C Ventilating Pipes Required for Various Loading Conditions 4-inch Discharge Stack		
Number of stories	**Stack serving one group[1] on each floor**	**Stack serving two groups[1] on each floor**
Flats[2], 1 to 5	No separate venting required	No separate venting required
6-11	2-inch vent stack connected to the discharge stack on alternate floors	2-inch vent stack connected to the discharge stack on alternate floors
12-15	2-inch vent stack connected to the discharge stack on each floor	2-inch vent stack connected to the discharge stack on each floor
16-20	2 1/2-inch vent stack connected to the discharge stack on each floor	3-inch vent stack connected to the discharge stack on each floor
Maisonettes[3], 1 to 4	Single stack system	Single stack system
5-8	Single stack system	2-inch vent stack connected to the discharge stack on alternate (bathroom) floors
9-15	2-inch vent stack connected to the discharge stack on alternate (bathroom) floors	2-inch vent stack connected to the discharge stack on alternate (bathroom floors)

Table 1811.D.6C Ventilating Pipes Required for Various Loading Conditions 4-inch Discharge Stack		
Number of stories	**Stack serving one group[1] on each floor**	**Stack serving two groups[1] on each floor**
16-20	2 1/2-inch vent stack connected to the discharge stack on alternate (bathroom) floors	3 -inch vent stack connected to the discharge stack on alternate (bathroom) floors

1 in = 25.4 mm

NOTES:
1. Each group consists of a water closet, a bath, a basin and a sink. Where dwellings contain more fixtures it may be necessary to provide additional vents.
2. Each complete living unit is on one floor.
3. Each complete living unit occupies space on two floors, with baths on one floor of the unit.

7. Ventilating Pipes. Ventilating pipes shall comply with the following.

a. General. The purpose of a ventilating pipe is to maintain equilibrium of pressure within the system and thus prevent the destruction of trap seals by siphonage or compression. It will also assist in preventing undue accumulation of foul air by facilitating air movement in the pipe system.

b. Installation. Ventilating pipes shall be so installed that there is a continuous fall back into the discharge pipe system to prevent any possibility of a waterlock or trap preventing the free movement of air through the ventilating system and to minimize the risk of internal corrosion. Short turn fittings in the pipework shall be avoided.

c. Branch Vents. Branch ventilating pipes may be connected to a main ventilating pipe or be carried upward either individually or in combination with one another. Such connections shall be above the flood level of the highest fixture served.

d. Sizes. The diameter of a branch ventilating pipe or of a ventilating stack shall be as given in Table 1811.D.7. For extremely long ventilating stacks, a larger diameter pipe shall be used. See Table 1811.D.7, Note 1.

e. Arrangement. A branch ventilating pipe, when required, shall be connected to the individual fixture discharge pipe (fixture drain) not less than 3 inches (76 mm) from the crown weir of the trap. A fixture may be connected to the bottom of a fixture vent, or at the base of a main ventilating stack to assure its being kept clear.

f. Purpose. The purpose of the ventilating pipes is to reduce the pressure fluctuations in the discharge stack by allowing air to enter the stack. Where venting is necessary, therefore, it is often convenient to do so by cross connecting the ventilating stack and the discharge stack directly, preferably above the highest fixtures as appropriate. To prevent cross flow into the ventilating stack, the branch ventilating pipe shall slope upward from the discharge stack at an angle of not less than 45 degrees (0.785 rad) from the horizontal until it reaches a point 6 inches (152 mm) above the flood level rim of the highest fixture serving the floor, at which point it may run at a horizontal angle until connecting with the vertical vent.

Table 1811.D.7 Branch Ventilation Pipe or Ventilating Stack	
Diameter of branch discharge pipe or discharge stack, D (in.)	**Diameter of Ventilating Pipe[1]**
Smaller than 3	2/3 D
3 to 4 inclusive	2 in.
Larger than 4	1/2 D

1 in. = 25.4 mm

NOTES:
1. When the vent length exceeds the length of the discharge stack, the vent shall be at least one pipe size larger than required in Table 1811.D.7 except for individual fixture vents.

g. Discharge Point. The outlet of every ventilating pipe system to the open air shall be at such a height and position as will effectively prevent the entry of foul air into the building (see §907).

8. Pipe Chases and Enclosures, Etc. Pipework enclosures, e.g., ducts, casings, etc., shall be of adequate size and shall have access provisions for maintenance, painting, testing and cleaning. They shall be constructed appropriately for fire resistance in accordance with requirements of the applicable codes adopted under the authority of Act 12 of the 2005 First Extraordinary Session.

9. Choice of Materials. Materials shall conform to the applicable requirements of other Sections and Chapters of this Part. Fittings used in the construction of single stack plumbing systems shall in no case be designed with inlet radii less than provided for in this Subsection.

10. Access to Interior of Pipework. Sufficient access shall be provided to enable all pipework to be tested and to provide reasonable access for cleaning and other necessary maintenance. All access points for clearing purposes shall be carefully sited to allow the entry of clearing apparatus or the insertion of testing apparatus and, where these are in ducts, consideration shall be given to the other services accommodated in the duct.

11. Simultaneous Discharge. The system of discharge pipes shall be capable of withstanding satisfactorily the effects of the probable maximum simultaneous discharge of fixtures which will occur in practice. The number of fixtures to be discharged together to simulate this effect is given in Table 1811.D.11.

a. For example, for a block of flats nine stories high with the stack serving one water closet, one lavatory, one sink and one bath on each floor, the test discharge is one water closet, one lavatory and one sink simultaneously discharged on each floor (i.e., 27 fixtures discharged simultaneously). Where the stack serves two water closets, two lavatories and two sinks on each floor, the test discharge is one water closet, one lavatory and two sinks simultaneously discharged on each floor (i.e., 36 fixtures discharged simultaneously). For the purpose of this test, baths are ignored as their use is spread over a period and consequently they do not add materially to the normal peak flow on which Table 1811.D.11 is based. Where a stack serves baths only, the number to be discharged simultaneously in a discharge should be taken to be the same as for sinks.

b. All traps shall be fully charged and the appropriate combination of fixtures discharged simultaneously. Trap seals shall be measured at the end of the discharge. The worst conditions occur when fixtures on the upper floor are discharged. A reasonable test, therefore, would be to discharge up to one water closet, one lavatory and one sink from the top of the building, distributing any additional fixtures along the stack.

Table 1811.D.11 Number of Fixtures to be Discharged Simultaneously for Testing Stability of Trap Seals				
Number of fixtures of each kind on the stack	**Water Closet**	**Wash Basin**	**Kitchen Sink[1]**	**Misc. (ea. Type)[2]**
1-9	1	1	1	1
10-18	1	1	2	2
19-26	2	2	3	3
27-50	2	3	3	3
51-78	3	4	4	4
79-100	3	5	5	4

NOTES:
1. When the miscellaneous fixture is a washer drain, omit one sink from test for each washer drain, except when washers only are connected to the stack.
2. For washing machine drains (no washers connected) test shall be conducted with hoses connected to both the hot and cold water supply out lets and with outlets fully opened. (This is in lieu of discharge from washers.) Test should be of 5 minutes duration, one-half of one cup of liquid detergent shall be dispensed into the washer drain pipe at approximately one-third cup per minute along with the water during the last 3 minutes of each test.

E. Single Stack Plumbing System

1. Approval. The purpose of this Subsection is to make provisions for the design and installation of a single stack plumbing system which is not otherwise allowed in this Part. In accord with Chapter 12, the plumbing official shall require that the owner submit necessary plans and specifications to the state health officer by a Louisiana Registered Professional Engineer registered in either civil or mechanical engineering. In general, single stack plumbing systems may be considered for approval by the state health officer for use on the upper floors of hotel and motel guest rooms but shall not be considered for condominium or apartment complexes.

2. Tests. Single stack plumbing systems shall be tested in accordance with §1205.C.

3. Sovent Single Stack Plumbing System. Copper sovent systems shall be designed and installed in accordance with design criteria contained in the Copper Development Association (CDA) Handbook No. 402/0. Cast iron sovent systems shall be designed and installed in accordance with design criteria contained in ASSE 1043. Cast iron fittings shall meet ASME B16.45. Other materials shall meet standards and specifications listed in Table 703 for drain, waste and vent pipe and fittings.

F. Appendix References. Additional provisions for Alternate Designed Plumbing Systems are contained in §1807, Appendix C – Figures 6 and 7.

AUTHORITY NOTE: Promulgated in accordance with R.S. 40:4(A)(7) and R.S. 40:5(2)(3)(7)(9)(16)(17)(20).

HISTORICAL NOTE: Promulgated by the Department of Health and Hospitals, Office of Public Health, LR 38:

§1813. Metric Conversions

A. For convenience, the following may be used to convert English units of measurement to Metric units of measurement.

Table 1813.A			
Unit of Measure	**STARTING WITH the English unit of measurement**	**MULTIPLY BY**	**TO GET the Metric unit of measurement**
Length	inches ft	25.4 0.3048	mm m
Area	sq in sq ft	645.16 0.0929	mm^2 m^2
Volume	cu in cu ft gal	0.01639 28.3169 3.785	L L L
Mass	lb	0.4536	kg
Mass/unit length	plf (lb/ft)	1.4882	kg/m
Mass/unit area	psf (lb/sq ft)	4.882	kg/m^2
Mass density	pcf (lb/cu ft)	16.02	kg/m^3
Force	lb	4.4482	N
Force/unit length	plf (lb/ft)	14.5939	N/m
Pressure	psi psf (lb/sq ft) in. of Hg @ 60°F	6.895 47.88 3.37685	kPa Pa kPa
stress, modulus of elasticity	psi psf (lb/sq ft)	6.895 47.88	kPa Pa
Second moment of area	In^4	416,231	Mm^4
Section modulus	In^3	16,387.064	mm^3
Temperature	°F-32 °F + 459.67	5/9 5/9	°C K
Energy, work, quantity of heat	kWh Btu ft •lb (force)	3.6 1055 1.3558	MJ J J
Power	ton (refrig) Btu/s hp (electric) Btu/h	3.517 1.0543 745.7 0.2931	kW kW W W
Thermal conductance (U value)	$Btu/f^2 \cdot h \cdot °F$	5.6783	$W/m^2 \cdot K$
Thermal resistance (R value)	$Ft^2 \cdot h \cdot °F/Btu$	0.1761	$M^2 \cdot K/W$
Flow	gpm cfm	0.0631 0.4719	L/s L/s
Illuminance	foot-candle (Im/sq ft)	10.76	Ix (lux)
Velocity (speed)	mph	0.447	m/s
Plane angle	°(angle)	0.01745	rad

AUTHORITY NOTE: Promulgated in accordance with R.S. 40:4(A)(7) and R.S. 40:5(2)(3)(7)(9)(16)(17)(20).

HISTORICAL NOTE: Promulgated by the Department of Health and Hospitals, Office of Public Health, LR 38:

Part XVI. Campsites

Chapter 1. General

§101. Definitions

[formerly paragraph 16:001]

A. Unless otherwise specifically provided herein, the following words and terms used in this Part of the sanitary code, and all other Parts which are adopted or may be adopted, are defined for the purposes thereof as follows.

* * *

Travel Trailer—a vehicular unit, mounted on wheels, designed to provide temporary living quarters for recreational, camping, or travel use, of such size or weight as

not to require special highway movement permits when towed by a motorized vehicle, and of gross trailer area less than 320 square feet

a. Self-Contained. Travel trailer having sleeping accommodations, kitchen sink, and other food preparation equipment, a water flushed or chemical toilet, lavatory and/or bathing facilities, and normally a sewage holding tank for retaining wastes.

b. Non Self-Contained. Travel trailer having sleeping accommodation usually kitchen facilities only and is dependent on a service building.

* * *

AUTHORITY NOTE: The first source of authority for promulgation of the sanitary code is in R.S. 36:258(B), with more particular provisions found in Chapters 1 and 4 of Title 40 of the Louisiana Revised Statutes. This Part is promulgated in accordance with the specific provisions of R.S. 40:4(A)(4) and R.S. 40:5.

HISTORICAL NOTE: Promulgated by the Department of Health and Hospitals, Office of Public Health, LR 28:1386 (June 2002), repromulgated LR 29:1098 (July 2003), amended LR 38:

Part XVII. Public Buildings, Schools, and Other Institutions

Chapter 1. General Requirements for Public Buildings

§101. Definitions

A. Unless otherwise specifically provided herein, the following words and terms used in this Part of the Sanitary Code, and all other Parts which are adopted or may be adopted, are defined for the purposes thereof as follows.

* * *

LSPC—Louisiana State Plumbing Code, i.e., Part XIV (Plumbing) of this Code (LAC 51:XIV).

* * *

B. - C. …

AUTHORITY NOTE: The first source of authority for promulgation of the sanitary code is in R.S. 36:258(B), with more particular provisions found in Chapters 1 and 4 of Title 40 of the Louisiana Revised Statutes. This Part is promulgated in accordance with R.S. 40:4(A)(10) and R.S. 40:5(2)(3)(4)(5)(16)(17)(19)(21).

HISTORICAL NOTE: Promulgated by the Department of Health and Hospitals, Office of Public Health, LR 37:2165 (July 2011), amended LR 38:

§107. Drinking Water Provisions [formerly paragraph 17:001]

A. …

B. Drinking fountains shall be provided in public buildings and institutions in the quantities shown in Table 411 of the Louisiana State Plumbing Code (LSPC). Said drinking fountains shall be constructed and installed in accordance with the requirements of §415.C of the LSPC.

AUTHORITY NOTE: Promulgated in accordance with R.S. 40:4(A)(10) and R.S. 40:5(2)(3)(4)(5)(16)(17)(19)(21).

HISTORICAL NOTE: Promulgated by the Department of Health and Hospitals, Office of Public Health, LR 28:1390 (June 2002), amended LR 37:2166 (July 2011), amended LR 38:

§303. School Lunchrooms and Concession Stands [formerly paragraph 17:022]

A. - B. …

C. [Formerly paragraph 17:024] In all schools and in other special types of institutions with classrooms, hand-washing facilities (for student and staff use before eating) shall be readily accessible in a common area and shall not be further than 50 feet from the lunch room, dining area or cafeteria. Said facility shall be provided with hot and cold running water delivered via a mixing faucet(s) or a mixing valve at a water temperature not to exceed 120°F [utilizing an approved temperature control device(s) as required under LAC 51:XIV.623], soap, and disposable paper towels or mechanical hand-drying devices.

AUTHORITY NOTE: Promulgated in accordance with R.S. 40:4(A)(10) and R.S. 40:5(2)(3)(4)(5)(16)(17)(19)(21).

HISTORICAL NOTE: Promulgated by the Department of Health and Hospitals, Office of Public Health, LR 28:1391 (June 2002), amended LR 37:2167 (July 2011), amended LR 38:.

Part XVIII. Jails, Prisons and Other Institutions of Detention or Incarceration

Chapter 1. General Requirements

§101. Construction Requirements

A. - I …

J. [Formerly paragraph 18:010] When inmates are housed in dormitories, sanitary facilities, meeting the requirements of Part XIV shall be provided in accordance with the following.

<table>
<tr><th>Toilets</th><th>Urinals*</th><th>Lavatories</th><th>Bathing Facilities (Showers, Tubs, etc.)</th><th>Drinking Fountains</th></tr>
<tr><td>1 for each 20 male inmates</td><td rowspan="2">1-30 1
31-50 2
51-100 3
101-150 4
over 150 for each additional 50 inmates</td><td>1 for each 16</td><td>**1 for 20</td><td>1 for 75</td></tr>
<tr><td>1 for each 14 female inmates</td><td colspan="3">Space between beds: min. of 28 inches vertically and horizontally for all new construction, renovation and replacement.</td></tr>
<tr><td colspan="5">1. *Only for facilities housing males. Trough urinals may be used as long as they meet the requirements of Part XIV.</td></tr>
<tr><td colspan="5">2. **The state health officer will consider written appeals based on unusual program schedules.</td></tr>
</table>

K. - P. …

AUTHORITY NOTE: The first source of authority for promulgation of the sanitary code is in R.S. 36:258(B), with more particular provisions found in Chapters 1 and 4 of Title 40 of the Louisiana Revised Statutes. This Part is promulgated in accordance with R.S. 40:4(A)(10) and R.S. 40:5(2)(3)(4)(5)(7)(17)(19)(21).

HISTORICAL NOTE: Promulgated by the Department of Health and Hospitals, Office of Public Health, LR 28:1392 (June 2002), amended LR 38:

Part XXI. Day Care Centers and Residential Facilities

Chapter 1. General Requirements

§105. General [formerly paragraph 21:002-1]

A. - C.5. …

a. In child day care facilities, toilets (water closets) and lavatories shall be provided in accordance with Table 411 of Part XIV. Fixtures shall be of size appropriate for the age of children being cared for (toilets 11 inches maximum height and lavatories 22 inches maximum height), or if standard size fixtures are used, safe, cleanable step aids shall be provided.

b. Handwashing and bathing facilities shall be provided with hot and cold running water. Where such water will be in direct contact with children, the temperature shall not exceed 120°F utilizing an approved temperature control device(s) as required under LAC 51:XIV.623.

c. Residential facilities housing six residents or less may provide plumbing fixtures as a single family residence.

All others must provide plumbing as required for dormitories in accordance with Table 411 of Part XIV.

D. - J. …

AUTHORITY NOTE: Promulgated in accordance with the provisions of R.S. 40:4(A)(10) and R.S. 40:5.

HISTORICAL NOTE: Promulgated by the Department of Health and Hospitals, Office of Public Health, LR 28:1399 (June 2002), amended LR 37:2728 (September 2011), amended LR 38:

Part XXIII. Retail Food Establishments

Chapter 3. General Requirements

§301. Effective Date of Part

A. - A.3. …

a. Exception

i. When only a real property ownership change occurs, restroom plumbing fixture upgrades to meet the minimum plumbing fixture requirements contained in LAC 51:XIV.411 and LAC 51:XIV.Table 411 are not to be blindly enforced if the state health officer/Office of Public Health has assurances that the prior or existing business held a food permit (e.g., grocery store, restaurant, etc.) under this Part (LAC 51:XXIII) and the prospective new business owner agrees, in writing to the state health officer/Office of Public Health, to operate the business in exactly the same manner as the prior or existing business owner (e.g., parents sell a business to their children who will operate the business in exactly the same manner) and there have been no documented complaints, within the past 5 years, about:

i. a lack of toilet room fixtures;

ii. urination in non-restroom fixtures or floor areas within the building; or,

iii. urination on the outside of the building or the premises or adjoining lots or areas, etc.

b. The exception (see §301.A.3.a.) to the normal enforcement procedures (see §301.A.3) shall not be applicable when a serious health threat to the public exists.

4. - 5. …

AUTHORITY NOTE: Promulgated in accordance with provisions of R.S. 40:4 and R.S. 40:5.

HISTORICAL NOTE: Promulgated by the Department of Health and Hospitals, Office of Public Health, LR 28:315 (February 2002), amended LR 28:1409 (June 2002), LR 38:

§3307. Cleaning and Storage [formally paragraph 22:23-4]

A. - C. …

D. Liquid waste from the cleaning operation and from the leakage of garbage containers holding putrescible wastes shall be disposed of as sewage. Methods used for this disposal shall prevent rainwater and runoff from adjacent areas from entering the sanitary sewerage system (i.e., . dumpster pads may be elevated or curbed, enclosed or covered). When determined by the state health officer that liquid wastes or putrescible wastes contain grease (or, for new establishments, will likely contain grease in the future), an approved grease trap, grease interceptor, or large capacity grease interceptor shall be installed in the waste line in accordance with LAC 51:XIV.1005.D.

E. - F. …

AUTHORITY NOTE: Promulgated in accordance with provisions of R.S. 40:4 and R.S. 40:5.

HISTORICAL NOTE: Promulgated by the Department of Health and Hospitals, Office of Public Health, LR 28:330 (February 2002), repromulgated LR 28:1424 (June 2002), amended LR 28:2533 (December 2002), LR 38:

Part XXIV. Swimming Pools and Natural or Semi-Artificial Swimming or Bathing Places

Chapter 1. General Requirements

§103. Definitions

A. Unless otherwise specifically provided herein the following words or terms used in this Part of the sanitary code and all other Parts which are adopted or may be adopted, are defined for the purposes thereof as follows.

LSPC—Louisiana State Plumbing Code, i.e., Part XIV (Plumbing) of this Code (LAC 51:XIV).

* * *

AUTHORITY NOTE: Promulgated in accordance with the provisions of R.S. 40:4(A)(11) and R.S. 40:5(3)(16)(17)(20).

HISTORICAL NOTE: Promulgated by the Department of Health and Hospitals, Office of Public Health, LR 28:1435 (June 2002), repromulgated LR 29:1100 (July 2003), amended LR 38:

Chapter 7. General Standards

§717. Ventilation

A. …

B. Every restroom, bathroom, water closet combination room, and toilet room, shall be provided with ventilation in accordance with §405.A of the Louisiana State Plumbing Code (LSPC).

C. …

AUTHORITY NOTE: Promulgated in accordance with the provisions of R.S. 40:4(A)(11) and R.S. 40:5(3)(16)(17)(20).

HISTORICAL NOTE: Promulgated by the Department of Health and Hospitals, Office of Public Health, LR 28:1443 (June 2002), amended LR 38:

Family Impact Statement

1. The Effect on the Stability of the Family. No effect on the stability of the family is anticipated as a result of this proposed rulemaking.

2. The Effect on the Authority and Rights of Parents Regarding the Education and Supervision of their Children. No effect on the authority and rights of parents regarding the education and supervision of their children is anticipated as a result of this proposed rulemaking.

3. The Effect on the Functioning of the Family. The functioning of the family is expected to be improved by adoption of this rule as the intent of the rule is to lower the occurrence of illness and disease in the population; thus, it is expected that fewer families and family members will become ill or diseased.

4. The Effect on the Family Earnings and Family Budget. The general public itself may find that this Rule will cause an increase in cost to construct a home. For example, Act No. 362 of the 2011 Regular Session effectively lowers the lead content of the wetted surfaces of certain pipe, plumbing fittings and fixtures which convey potable water in homes. Effective January 1, 2013, new plumbing fixtures will be required to conform with *NSF/ANSI Standard 372* to ensure compliance. A new plumbing fixture complying with this standard will likely cost more than the price of a plumbing fixture which is not in compliance with this standard.

5. The Effect on the Behavior and Personal Responsibility of Children. No effect on the behavior and personal responsibility of children is anticipated as a result of this proposed rulemaking.

6. The Ability of the Family or Local Government to Perform the Function as Contained in the Proposed Rule.

Families typically hire a plumber to perform plumbing work on their own home. If the family does its own plumbing work on their own residence, the family is required to comply with the applicable plumbing code requirements.

The plumbing officials who work in local governmental units will have to familiarize themselves with the amended requirements of Part XIV (Plumbing). This will require some time to study the amended regulations so that such regulations can be enforced at the local level. Time on the job is money, so in that sense, it will cost the local governmental unit some money for training or self-training purposes. On the other hand, publication of the entirety of Part XIV in the LAC will allow the local governmental unit to save funds as the entirety of Part XIV will now be available free of charge electronically on the Office of the State Register's website; therefore, there will be no need for the local governmental unit to purchase a plumbing code book.

Public Comments

In addition, all interested persons are invited to submit written comments on the proposed Rule. Such comments must be received no later than Friday, September 28th, 2012 at COB, 4:30 p.m., and should be addressed to Jake Causey, Chief Engineer, Engineering Services Section, Center for Environmental Health Services, Office of Public Health, CEHS Mail Bin # 3, P.O. Box 4489, Baton Rouge, LA 70821-4489, or faxed to (225) 342-7303. If comments are to be shipped or hand-delivered, please deliver to the Bienville Building, 628 N. Fourth Street—Room 134, Baton Rouge, LA 70802.

Public Hearing

DHH-OPH will conduct a public hearing at 10 am on Tuesday, September 25th, in Room 118 of the Bienville Building, 628 North Fourth Street, Baton Rouge, LA. Persons attending the hearing may have their parking ticket validated when one parks in the seven-story Galvez Parking Garage which is located between N. Sixth and N. Fifth/North and Main Sts. (cater-corner and across the street from the Bienville Building). All interested persons are invited to attend and present data, views, comments, or arguments, orally or in writing

Bruce D. Greenstein
Secretary

FISCAL AND ECONOMIC IMPACT STATEMENT FOR ADMINISTRATIVE RULES
RULE TITLE: Sanitary Code—Plumbing

I. ESTIMATED IMPLEMENTATION COSTS (SAVINGS) TO STATE OR LOCAL GOVERNMENT UNITS (Summary)

The Office of Public Health is proposing to amend Part XIV (Plumbing) of the State Sanitary Code (LAC 51), which has not been updated since 2000. The existing Parts I, VI, VII, X, XII, XVI, XVII, XVIII, XXI, XXIII, and XXIV of the State Sanitary Code will also be amended to update plumbing references within these other Parts to match the proposed changes in Part XIV. The rule changes will include regulations to implement the provisions of HCR 4 of the 2008 Regular Session regarding privacy wall or partition requirements for male urinals in public toilet rooms as well as Act 362 of the 2011 Regular Session, which lowers the lead content of the wetted surfaces of certain pipe, plumbing fittings, and fixtures that convey potable water.

State and local agencies that undergo new construction, renovations or building additions may find that this rule change will cause an increase in construction costs of an indeterminable amount. Effective January 1, 2013, new plumbing fixtures will be required to conform to the *National Science Foundation/American National Standards Institute (NSF/ANSI) Standard 372*. It is anticipated that a new plumbing fixture complying with this standard will likely cost more than a plumbing fixture that is not in compliance. These costs will vary and depend on the size and scope of the project.

Local governmental units will have to familiarize themselves with the amended requirements of Part XIV (Plumbing Code) and will incur additional costs for any training for officials who regulate or monitor local plumbing issues. These costs will vary per person based on need. However, the Pluming Code will now be available online at no cost, which will result in a savings of $65 per book for the local governmental units.

This proposed change will also result in an estimated cost of $43,890 in FY 13 to publish the notice of intent and the final rule in the *Louisiana Register*. This is a one-time cost that will be absorbed in the agency's existing budget.

II. ESTIMATED EFFECT ON REVENUE COLLECTIONS OF STATE OR LOCAL GOVERNMENTAL UNITS (Summary)

There will be no effect on revenue collections of state or local governmental units as a result of the proposed rule change.

III. ESTIMATED COSTS AND/OR ECONOMIC BENEFITS TO DIRECTLY AFFECTED PERSONS OR NONGOVERNMENTAL GROUPS (Summary)

Plumbers who are licensed by the State Plumbing Board of Louisiana will have to comply with the proposed rule changes. Likewise, design engineers and architects involved in developing plans and specifications for new construction, renovations and building additions will be directly affected by the proposed rule and will incur additional costs for training or self-training purposes to familiarize themselves with the new rules. These costs will vary per person and job function based on need. As the result of publishing this rule, the plumber, design engineer or architect will save $65 per purchase of the Plumbing Code book. These individuals will now be able to download the book on the Office of the State Register's website.

IV. ESTIMATED EFFECT ON COMPETITION AND EMPLOYMENT (Summary)

The proposed rule is not anticipated to have an effect on the competition or employment of Louisiana Licensed Plumbers. The proposed rule change to section 609(F) will likely cause an increase in the number of individuals seeking to hold a backflow prevention assembly repairer certificate in order to be able to legally perform repairs on those backflow preventers located on public property or otherwise that are under the complete control of the water supplier (e.g., devices on water meter or on the piping upstream of the water meter).

In addition, the codified definition of a qualified cross connection control surveyor in section 607(C) will likely cause an increase in the number of individuals seeking to hold a cross connection control surveyor certificate in order to be able to legally perform cross connection surveys, particularly as required under R.S. 40:4.12(B)(1)(c)(iii). The rule will require more knowledge of cross connection control issues in order to preserve the quality of potable and non-potable water. The more competent and qualified a person is in the field of cross connection control, the higher the competition will be to hire

and retain him/her. This will likely cause an increase in employment opportunities for persons interested in the field of cross connection control.

J.T. Lane
Assistant Secretary
1208#130

Greg V. Albrecht
Chief Economist
Legislative Fiscal Office

NOTICE OF INTENT

Department of Health and Hospitals
Office of Public Health

Tuberculosis Control Program
Required Medical Examinations (LAC 51:II.505)

Notice is hereby given, in accordance with the Administrative Procedure Act, R.S. 49:950 et seq., the Department of Health and Hospitals, Office of Public Health, pursuant to the authority in R.S. 40:5, and based on the amendment and reenactment of R.S. 40:1156, intends to amend Part II (The Control of Diseases) of the Louisiana State Sanitary Code (LAC 51). This Rule removes the requirement of a test for tuberculosis and a chest x-ray to detect pulmonary tuberculosis for those persons over 35 years of age admitted to nursing homes and residential facilities. This action is taken in accord with the latest recommendation (2011) by the United States Centers for Disease Control and Prevention (CDC). This Rule adds the requirement that the physician's complete history and physical examination of persons admitted to nursing homes and residential facilities include asking about and looking for symptoms and signs of pulmonary tuberculosis. A chest x-ray to detect pulmonary tuberculosis will be required for those persons of any age who have symptoms and signs of pulmonary tuberculosis and/or a positive test for tuberculosis. This Rule also changes the time requirement for that complete history and physical examination to be done from 30 days prior to 48 hours after admission, to from 30 days prior to 72 hours after admission, to account for persons admitted on the weekend having the required examination done on the following Monday.

Title 51
PUBLIC HEALTH—SANITARY CODE
Part II. The Control of Diseases
Chapter 5. Health Examinations for Employees, Volunteers and Patients at Certain Medical Facilities
§505. Required Medical Examinations of All Persons Admitted to Nursing Homes and Residential Facilities [formerly paragraph 2:026]

A. Any person (adult or child) admitted to any nursing home or other residential facility shall have a complete history and physical examination, including symptoms and signs of pulmonary tuberculosis, by a licensed physician within 30 days prior to or up to 72 hours after admission, except that any resident/patient who has complied with this provision shall be exempt from re-examination if transferred to another residential facility provided the record of examination is transferred to the new facility. This examination shall include laboratory tests as indicated by the history and physical examination. A federal Food and Drug Administration approved screening test for tuberculosis, i.e. a purified protein derivative intradermal skin test for tuberculosis, five tuberculin unit strength, given by the Mantoux method or a blood assay for *Mycobacterium tuberculosis* shall be given to all residents/patients. A chest X-ray shall be given to all residents/patients whose screening test for tuberculosis is positive, or who have signs and/or symptoms of tuberculosis no more than 30 days prior to admission to any nursing home or other residential facility. If the skin test or a blood assay for *Mycobacterium tuberculosis* is not done prior to admission, it may be done within 72 hours after admission and interpreted at the appropriate time. A repeat skin test or a blood assay for *Mycobacterium tuberculosis* is not required if the resident/patient (a) has a chest X-ray with no abnormalities indicative of tuberculosis and has had a negative skin test or a blood assay for *Mycobacterium tuberculosis* approved by the United States Food and Drug Administration, documented within one year of admission or (b) if the resident/patient has a previously documented positive skin test or a positive result of a blood assay for *Mycobacterium tuberculosis* and had a chest X-ray with no abnormalities indicative of tuberculosis. A record of the admission history, physical examination, purified protein derivative skin test for tuberculosis, five tuberculin unit strength, given by the Mantoux method, or a blood assay for *Mycobacterium tuberculosis* approved by the United States Food and Drug Administration, chest X-ray, and any other laboratory tests shall be a part of the permanent record of each resident/patient. No resident/patient with evidence of active tuberculosis shall be admitted unless the examining physician states that the resident/patient is on an effective drug regimen, is responding to treatment, and presents no imminent danger to other residents/patients or employees, or unless the facility has been specifically approved by the Office of Public Health and the Department of Health and Hospitals to house residents/patients with active tuberculosis. The approval by the Office of Public Health and the Department of Health and Hospitals will include the provision that the nursing home or residential facility has a designated isolation (negative pressure) room.

B. [Formerly paragraph 2:026-1] Any resident/ patient who is a case or an asymptomatic carrier of a communicable disease which may pose a serious risk to other residents/patients or employees shall not be admitted except under the supervision of the state health officer or his agent.

C. [Formerly paragraph 2:027] When a suspicious case or carrier of a communicable disease poses a serious public health risk, appropriate measures shall be taken to prevent the disease from spreading to other residents/ patients.

D. [Formerly paragraph 2:028] Any child under 18 years of age in any residential facility in the state shall have an annual examination by a licensed physician to determine the child's physical condition, mental condition and the presence of any indication of hereditary or other constitutional disease. Any deformity or abnormal condition found upon

examination shall be entered by the physician on the medical record of the child.

AUTHORITY NOTE: Promulgated in accordance with the provisions of R.S. 40:4(A)(2) and R.S. 40:5.

HISTORICAL NOTE: Promulgated by the Department of Health and Hospitals, Office of Public Health, LR 28:1220 (June 2002), amended LR 33:94 (January 2007), LR 38:

Family Impact Statement

1. The Effect on the Stability of the Family. This proposed Rule will enhance the stability of the family in helping to continue to provide not only detection of tuberculosis, if the disease is found in a family member in a nursing home or medical facility, but also reduce the costs of the care of those persons by eliminating the requirement of a chest x-ray that is not medically indicated as needed.

2. The Effect on the Authority and Rights of Parents Regarding the Education and Supervision of their Children. This proposed Rule will enhance the effect of the authority and rights of parents regarding the education and supervision of their children in helping to continue to provide not only detection of tuberculosis, if the disease is found in a family member in a nursing home or medical facility, but also reduce the costs of the care of those persons by eliminating the requirement of a chest x-ray that is not medically indicated as needed.

3. The Effect on the Functioning of the Family. This proposed Rule will enhance the functioning of the family in helping to continue to provide not only detection of tuberculosis, if the disease is found in a family member in a nursing home or medical facility, but also reduce the costs of the care of those persons by eliminating the requirement of a chest x-ray that is not medically indicated as needed.

4. The Effect on the Family Earnings and family Budget. This proposed Rule may save some families the cost of a chest x-ray not medically indicated for detection of tuberculosis in a family member in a nursing home or medical facility.

5. The Effect on the Behavior and Personal Responsibility of children. This proposed Rule will have no effect on the behavior and personal responsibility of children.

6. The Ability of the Family or Local Government to Perform the Function as Contained in the Proposed Rule. This proposed Rule will have no effect on the ability of the family or local government to perform the function as contained in the proposed Rule.

Public Comments

All interested persons are invited to submit written comments on the proposed Rule. Such comments must be received no later than Monday, September 10, 2012 at 4:30 p.m., and should be sent to Dr. Louis Trachtman, Medical Director, TB Control Section, DHH-OPH, or Mr. Charles DeGraw, Administrative Director, TB Control Section, P.O. Box 60630, New Orleans, LA 70160-0630 or to fax (504) 565-5016. Copies of this proposed Rule can be obtained from the above referenced address.

Bruce Greenstein
Secretary

FISCAL AND ECONOMIC IMPACT STATEMENT FOR ADMINISTRATIVE RULES
RULE TITLE: Tuberculosis Control Program—Required Medical Examinations

I. ESTIMATED IMPLEMENTATION COSTS (SAVINGS) TO STATE OR LOCAL GOVERNMENT UNITS (Summary)

The proposed rule amends Part II, Section 505 of the State Sanitary Code (LAC 51). Under the proposed rule change, if a state nursing home or residential facility would like to admit any person(s) with active tuberculosis disease, it must now have a designated isolation room approved by Office of Public Health. Currently, Villa Feliciana is the only state facility that admits active tuberculosis patients and is the only facility with an isolation unit. Should any other state nursing home or residential facility wish to admit active tuberculosis patients, it will have to incur the cost of constructing, renovating, or designating an approved area for this purpose.

The proposed rule change also adopts the Centers for Disease Control's (CDC) chest x-ray recommendation, and eliminates the age requirement that all persons 35 years and older admitted to a nursing home or residential facility be screened for pulmonary tuberculosis with a chest x-ray. The requirement of a chest x-ray will now only be required on persons having a positive test and/or symptoms and signs of having pulmonary tuberculosis, regardless of age. Licensed state entities impacted by this rule change include Villa Feliciana, the state nursing home, and any state residential facility, such as a state mental health hospital. It is anticipated that not requiring chest x-rays for all patients 35 years and older will result in a net savings to state facilities of an indeterminable amount when compared to the cost of chest x-rays only for positive tuberculosis patients at any age. For example, in FY 12 there were approximately 150 patients over 35 and only 4 patients with active tuberculosis at Villa Feliciana.

In addition, the proposed rule change adds verbiage that a repeat test for tuberculosis is not required if the patient has a chest x-ray with no abnormalities indicative of tuberculosis or a history of a negative test within one year of admission to the nursing home or residential facility licensed by the Department of Health and Hospitals (DHH). This will result in an indeterminable amount of savings to Villa Feliciana and state residential facilities based on the cost of the x-ray (typically $37.12 to $197.77 per x-ray), and will vary depending on the number of tuberculosis patients.

The proposed change will result in an estimated cost of $418 to publish the notice of intent and the final rule in the Louisiana Register. This is a one-time cost that will be absorbed in the agency's existing budget.

II. ESTIMATED EFFECT ON REVENUE COLLECTIONS OF STATE OR LOCAL GOVERNMENTAL UNITS (Summary)

There are no effects on revenue collections of state or local governmental units anticipated as a result of this rule change.

III. ESTIMATED COSTS AND/OR ECONOMIC BENEFITS TO DIRECTLY AFFECTED PERSONS OR NONGOVERNMENTAL GROUPS (Summary)

Since fewer x-rays will be required, there will be a savings to patients depending on the physician and x-ray costs, which typically range from $37.12 to $197.77 per chest x-ray. Any costs incurred by a private facility administering the chest x-rays is covered by these patient fees. Any private nursing home

or residential facility admitting active tuberculosis patients without an approved designated isolation room will have to incur any costs associated with constructing, renovating, or designating an area for this purpose.

IV. ESTIMATED EFFECT ON COMPETITION AND EMPLOYMENT (Summary)

There are no estimated effects on competition and employment as result of this rule change.

J. T. Lane
Assistant Secretary
1208#127

Gregory V. Albrecht
Chief Economist
Legislative Fiscal Office

NOTICE OF INTENT

Department of Natural Resources
Office of Conservation

Fees (LAC 43:XIX.701, 703, and 707)

Pursuant to power delegated under the laws of the state of Louisiana, and particularly Title 30 of the Louisiana Revised Statutes of 1950, as amended, the Office of Conservation proposes to amend LAC 43:XIX.701, 703, and 707 (Statewide Order No. 29-R) in accordance with the provisions of the Administrative Procedure Act, R.S. 49:950 et seq. The proposed action will adopt Statewide Order No. 29-R-12/13 (LAC 43:XIX, Subpart 2, Chapter 7), which establishes the annual Office of Conservation Fee Schedule for the collection of Application, Production, and Regulatory Fees, and will replace the existing Statewide Order No. 29-R-11/12.

Title 43
NATURAL RESOURCES
Part XIX. Office of Conservation—General Operations
Subpart 2. Statewide Order No. 29-R
Chapter 7. Fees
§701. Definitions

* * *

BOE—annual barrels oil equivalent. Gas production is converted to BOE by dividing annual mcf by a factor of 19.0.

Capable Gas—natural and casing head gas not classified as incapable gas well gas or incapable oil well gas by the Department of Revenue, as of December 31, 2011.

Capable Oil—crude oil and condensate not classified as incapable oil or stripper oil by the Department of Revenue, as of December 31, 2011.

* * *

Production Well—any well which has been permitted by and is subject to the jurisdiction of the Office of Conservation, excluding wells in the permitted and drilling in progress status, Class II injection wells, liquid storage cavity wells, commercial salt water disposal wells, Class V injection wells, wells which have been plugged and abandoned, wells which have reverted to landowner for use as a fresh water well (Statewide Order No. 29-B, LAC 43:XIX.137.G, or successor regulations), multiply completed wells reverted to a single completion, and stripper oil wells or incapable oil wells or incapable gas wells certified by the Severance Tax Section of the Department of Revenue, as of December 31, 2011.

Regulatory Fee—an amount payable annually to the Office of Conservation, in a form and schedule prescribed by the Office of Conservation, on Class II wells, Class III wells, storage wells, Type A facilities, and Type B facilities in an amount not to exceed $875,000 for Fiscal Year 2000-2001 and thereafter. No fee shall be imposed on a Class II well of an operator who is also an operator of a stripper crude oil well or incapable gas well certified pursuant to R.S. 47.633 by the Severance Tax Section of the Department of Revenue as of December 31, 2011, and located in the same field as such Class II well. Operators of Record, excluding operators of wells and including, but not limited to, operators of gasoline/cycling plants, refineries, oil/gas transporters, and/or certain other activities subject to the jurisdiction of the Office of Conservation are required to pay an annual registration fee of $105. Such payment is due within the time frame prescribed by the Office of Conservation.

* * *

AUTHORITY NOTE: Promulgated in accordance with R.S. 30:21 et seq.

HISTORICAL NOTE: Promulgated by the Department of Natural Resources, Office of Conservation, LR 14:542 (August 1988), amended LR 15:551 (July 1989), LR 21:1249 (November 1995), LR 24:458 (March 1998), LR 24:2127 (November 1998), LR 25:1873 (October 1999), LR 26:2302 (October 2000), LR 27:1919 (November 2001), LR 28:2366 (November 2002), LR 29:2499 (November 2003), LR 31:2950 (November 2005), LR 32:2087 (November 2006), LR 33:2462 (November 2007), LR 34:2404 (November 2008), LR 35:2463 (November 2009), LR36: 2567(November 2010), LR37:3271 (November 2011): LR38 (November 2012), LR 38:

§703. Fee Schedule for Fiscal Year 2012-2013

A. …

* * *

B. Regulatory Fees

1. Operators of each permitted Type A Facility are required to pay an annual Regulatory Fee of $6,220 per facility.

2. Operators of each permitted Type B Facility are required to pay an annual Regulatory Fee of $3,110 per facility.

3. Operators of record of permitted non-commercial Class II injection/disposal wells are required to pay $627 per well.

4. Operators of record of permitted Class III and Storage wells are required to pay $627 per well.

C. Class I Well Fees. Operators of permitted Class I wells are required to pay $10,810 per well.

D. Production Fees. Operators of record of capable oil wells and capable gas wells are required to pay according to the following annual production fee tiers.

Tier	Annual Production (Barrel Oil Equivalent)	Fee ($ per Well)
Tier 1	0	13
Tier 2	1 - 5,000	70
Tier 3	5,001 - 15,000	199
Tier 4	15,001 - 30,000	332
Tier 5	30,001 - 60,000	523
Tier 6	60,001 - 110,000	726
Tier 7	110,001 - 9,999,999	897

E. – F.2. …

AUTHORITY NOTE: Promulgated in accordance with R.S. 30:21 et seq., R.S. 30:560 and 706.

HISTORICAL NOTE: Promulgated by the Department of Natural Resources, Office of Conservation, LR 14:543 (August

1988), amended LR 15:552 (July 1989), LR 21:1250 (November 1995), LR 24:458 (March 1998), LR 24:2128 (November 1998), LR 25:1874 (October 1999), LR 26:2304 (October 2000), LR 27:1920 (November 2001), LR 28:2368 (November 2002), LR 29:350 (March 2003), LR 29:2501 (November 2003), LR 30:2494 (November 2004), LR 31:2950 (November 2005), LR 32:2088 (November 2006), LR 33:2462 (November 2007), LR 34: 2404 (November 2008), LR 35:2463 (November 2009), LR36: 2567(November 2010), LR37: 3271 (November 2011): LR38 (November 2012), LR 38:

§705. Failure to Comply

A. Operators of operations and activities defined in §701 are required to timely comply with this Order. Failure to comply by the due date of any required fee payment will subject the operator to civil penalties provided in Title 30 of the Louisiana Revised Statutes of 1950, including but not limited to R.S. 30:18.

AUTHORITY NOTE: Promulgated in accordance with R.S. 30:21 et seq.

HISTORICAL NOTE: Promulgated by the Department of Natural Resources, Office of Conservation, LR 14:544 (August 1988), amended LR 15:552 (July 1989), LR 21:1251 (November 1995), LR 24:459 (March 1998), LR 24:2128 (November 1998), LR 25:1874 (October 1999), LR 26:2304 (October 2000), LR 27:1921 (November 2001), LR 28:2368 (November 2002), LR 29:2501 (November 2003), LR 34:2406 (November 2008), LR 36:2569 (November 2010), LR 37:3274 (November 2011), LR 38:

§707. Severability and Effective Date

A. The fees set forth in §703 are hereby adopted as individual and independent rules comprising this body of rules designated as Statewide Order No. 29-R-12/13 and if any such individual fee is held to be unacceptable, pursuant to R.S. 49:968(H)(2), or held to be invalid by a court of law, then such unacceptability or invalidity shall not affect the other provisions of this order which can be given effect without the unacceptable or invalid provisions, and to that end the provisions of this order are severable.

B. This Order (Statewide Order No. 29-R-12/13) supersedes Statewide Order No. 29-R-11/12 and any amendments thereof.

AUTHORITY NOTE: Promulgated in accordance with R.S. 30:21 et seq.

HISTORICAL NOTE: Promulgated by the Department of Natural Resources, Office of Conservation, LR 14:544 (August 1988), amended LR 15:552 (July 1989), LR 21:1251 (November 1995), LR 24:459 (March 1998), LR 24:2128 (November 1998), LR 25:1874 (October 1999), LR 26:2305 (October 2000), LR 27:1921 (November 2001), LR 28:2368 (November 2002), LR 29:2502 (November 2003), LR 30:2494 (November 2004), LR 31:2950 (November 2005), LR 32:2088 (November 2006), LR 33: 2462 (November 2007), LR 34: 2404(November 2008), LR 35:2463 (November 2009), LR36: 2567(November 2010), LR37:3271 (November 2011): LR38 (November 2012).

Family Impact Statement

In accordance with RS 49:972, the following statements are submitted after consideration of the impact of the proposed Rule on family as defined therein.

1. The proposed Rule will have no effect on the stability of the family.

2. The proposed Rule will have no effect on the authority and rights of parents regarding the education and supervision of their children.

3. The proposed Rule will have no effect on the functioning of the family.

4. The proposed Rules will have no effect on family earnings and family budget.

5. The proposed Rules will have no effect on the behavior and personal responsibility of children.

6. The proposed Rules will have no effect on the ability of the family or local government to perform any function as contained in the proposed Rules.

Public Comments

Comments and views regarding the proposed fees will be accepted until 4:30 p.m., Friday, September 28, 2012. Comments should be directed, in writing, to Todd Keating, Director, Engineering Division, Office of Conservation, P.O. Box 94275, Capitol Station, Ninth Floor, Baton Rouge, LA 70804-9275 (Re: Docket No. 12-401 Proposed Statewide Order No. 29-R-12/13).

Public Hearing

A public hearing will be held at 9 a.m., Tuesday, September 25, 2012, in the LaBelle Hearing Room, located on the First Floor, LaSalle Building, 617 North Third Street, Baton Rouge, LA.

James H. Welsh
Commissioner

FISCAL AND ECONOMIC IMPACT STATEMENT FOR ADMINISTRATIVE RULES
RULE TITLE: Fees

I. ESTIMATED IMPLEMENTATION COSTS (SAVINGS) TO STATE OR LOCAL GOVERNMENT UNITS (Summary)

There are no estimated implementation costs or savings to the state or local governmental units as a result of the proposed Rule changes. The proposed Rule provides for changes in the Office of Conservation's General Operations Statewide Order No. 29-R. The proposal provides for changes in the definitions, the fee schedule and the severability and effective date of the Office of Conservation General Operations Statewide Order No. 29-R. Changes to the definitions include: (1) changing the BOE-annual barrels oil equivalent from 16.0 to 19.0 that is based on a three year average (09, 10, 11) of the cost of oil and gas; and (2) changing the date in capable gas definition, capable oil definition, production well definition and regulatory fee definition from December 31, 2010 to December 31, 2011. The Rule changes also reduce the fee for annual regulatory fees and annual production fees. Annual regulatory fees are reduced as follows: (1) Operators of Type A facility from $6,798 to $6,220; (2) Operators of Type B facility from $3,399 to $3,110; (3) Operators of record of permitted non-commercial Class II injection/disposal wells from $689 to $627; (4) Operators of record of permitted Class III storage wells from $689 to $627; (5) Operators of permitted Class I well from $10,958 to $10,810. The per well annual production fees for operators of capable oil wells and capable gas wells are reduced as follows: Tier 1 from $16 to $13; Tier 2 from $87 to $70; Tier 3 from $248 to $199; Tier 4 from $414 to $332; Tier 5 from $653 to $523; Tier 6 from $905 to $726; Tier 7 from $1,120 to $897. The severability and effective date is being changed from (FY) 11/12 to 12/13. Fee reductions are largely offset by greater number of wells such that total collections are only minimally affected.

II. ESTIMATED EFFECT ON REVENUE COLLECTIONS OF STATE OR LOCAL GOVERNMENTAL UNITS (Summary)

Since the agency will retain the maximum revenue caps authorized by R.S. 30:21 et seq., there is minimal anticipated effect on revenue collections of state or local governmental

units as a result of the Rule changes since well fee reductions are largely offset by greater number of wells.

III. ESTIMATED COSTS AND/OR ECONOMIC BENEFITS TO DIRECTLY AFFECTED PERSONS OR NONGOVERNMENTAL GROUPS (Summary)

Due to an increase in the number of wells, all operators will pay less annual regulatory and production fees per well. Annual regulatory fees are reduced as follows: (1) Operators of Type A facility - $578; (2) Operators of Type B facility - $289; (3) Operators of record of record of permitted non-commercial Class II injection/disposal wells - $62; (4) Operators of record of permitted Class III storage wells - $62; (5) Operators of permitted Class 1 well - $148. The per well annual production fees for operators of capable oil wells and capable gas wells are reduced as follows: Tier 1 - $3; Tier 2 - $17; Tier 3 - $49; Tier 4 - $82; Tier 5 - $130; Tier 6 - $179; Tier 7 - $223. Total annual regulatory and annual production fees are only minimally affected.

IV. ESTIMATED EFFECT ON COMPETITION AND EMPLOYMENT (Summary)

The passage of Statewide Order No. 29-R-12/13 will have no effect on competition and employment.

Gary P. Ross	Gregory V. Albrecht
Assistant Commissioner	Chief Economist
1208#081	Legislative Fiscal Office

NOTICE OF INTENT

Department of Public Safety and Corrections
Corrections Services

Judicial Agency Referral Residential Facilities
(LAC 22:I.1301 and 1303)

In accordance with the provisions of the Administrative Procedure Act (R.S. 49:950), the Department of Public Safety and Corrections, Corrections Services, hereby gives notice of its intent to amend the contents of LAC 22:I.1301, Judicial Agency Referral Residential Facilities and LAC 22:I.1303, Standard Operating Procedures.

Title 22
CORRECTIONS, CRIMINAL JUSTICE AND LAW ENFORCEMENT
Part I. Corrections
Chapter 13. Residential Referral
Subchapter A. General Provisions
§1301. Judicial Agency Referral Residential Facilities

A. Purpose—to state the secretary's rules relative to the housing or temporary residence of individuals who have been arrested for the commission of a crime and are referred by any judicial agency to a certified residential facility and to provide for the construction, standards of operation and services provided by such residential facilities. Further, certified judicial agency referral residential facilities shall also be available for use by the Division of Probation and Parole to house offenders under supervision by the Division of Probation and Parole. Such offenders who are probationers shall be accountable to the applicable court and those who are parolees shall be accountable to the Committee on Parole.

B. Applicability—deputy secretary, undersecretary, chief of operations, assistant secretary, director of probation and parole, chairman of the Committee on Parole and administrators of housing or temporary residential facilities. The chief of operations is responsible for the overall implementation, compliance and review of this regulation. Each unit head is responsible for ensuring that appropriate unit written policy and procedures are in place to comply with the provisions of this regulation.

C. Policy. No facility not otherwise required to be licensed by the Department of Health and Hospitals or Department of Children and Family Services, shall provide housing or temporary residence to any individual referred by a judicial agency, the court or the Committee on Parole except in accordance with this regulation. Referrals to such facilities by a judicial agency, the court or the Committee on Parole may only be made after the facility has been inspected by the Department of Public Safety and Corrections and certified to be in compliance with the standard operating procedures established pursuant to this regulation.

D. Procedures

1. The facility shall comply with all building codes, local zoning requirements and ordinances with regard to permits and licenses.

2. The state fire marshal and state health officer shall determine rated bed capacity and approval for occupancy.

3. The facility shall comply with the standard operating procedures (SOP) for judicial agency referral residential facilities. Revisions to the SOP shall be accomplished through this regulation under the signature of the secretary.

4. The facility shall be accredited by the American Correctional Association within 24 months of opening and shall maintain accreditation at all times thereafter.

AUTHORITY NOTE: Promulgated in accordance with R.S. 40:2851 and 2852.

HISTORICAL NOTE: Promulgated by the Department of Public Safety and Corrections, Corrections Services, LR 33:666 (April 2007), amended LR 37:1408 (May 2011), LR 38:

Subchapter B. Standard Operating Procedures for Judicial Agency Referral Residential Facilities
§1303. Standard Operating Procedures

A. - M.2.b. …

N. Probation and Parole Referrals

1. All judicial agency referral residential facilities receiving offenders referred by the Division of Probation and Parole shall be accountable to the judicial courts for probationers and the Committee on Parole for parolees. At the time of referral, the facility shall be provided with the information necessary to ensure the offender is advised of the required conditions of supervision, including monetary obligations to which the facility will be held accountable. The facility shall aid in providing the services necessary for the offender to continue the conditions of supervision and to ensure the monetary obligations are followed and met. The facility shall also be provided with the offender's medical summary (including the date of the offender's last TB test), if available. The facility's health care administrator shall review the summary and determine if the offender is medically suitable for participation in the program.

2. Should the facility be unable to provide the offender with adequate support necessary for the offender to fulfill the required conditions of supervision ordered by the court/Committee on Parole and the monetary obligations to

the facility, the facility shall notify the appropriate probation and parole district office immediately and in writing, detailing the issues relating to either the inability on the part of the offender or the facility to fulfill the conditions of supervision. Probation and parole shall notify the court/Committee on Parole in order that a decision can be made regarding the offender's compliance with the ordered conditions and continuation in the program.

3. The appropriate probation and parole district office shall monitor the progress of offenders in the facility to ensure their safety and well being. Probation and parole staff shall be allowed to have access to the facility in order to interview offenders at all times, including nights and weekends. All such visits shall be logged in a logbook dedicated specifically for probation and parole monitoring visits and shall include the date, time in, time out and the offenders interviewed. Any specific concerns discovered during the contact should be discussed with the facility director.

4. Within 14 days of admission, the facility shall provide the appropriate probation and parole district office with each offender's personalized program plan, which shall address all conditions of probation or parole. The facility shall also provide the appropriate probation and parole district office with any changes or updates to the offender's personalized program plan. The facility shall ensure that an estimated date for completion of the program is included in all personalized program plans. Additionally, the facility shall provide written documentation of an offender's progress with their personalized program plan to the appropriate probation and parole district office every 30 days or upon request.

5. In reference to employment, all probationers and parolees must maintain employment while in the program. Probationers and parolees must be employed as soon as possible. Should an offender remain unemployed longer than 45 days of entering the program or be terminated by their employer, the appropriate probation and parole district office shall be notified. Probation and parole staff shall have the ability to speak with employers regarding offender progress and also meet with offenders at their job site if necessary. However, the visit should be unobtrusive to the work flow of the employer's operations.

6. No probationer or parolee shall be allowed to travel out of the state of Louisiana without the written consent of the offender's probation and parole officer. Offenders residing off facility grounds shall be contacted by facility staff daily. The contact must be face-to-face and be conducted at the location where the offender is residing.

7. The facility is responsible for all travel by an offender to and from the facility. All offenders shall be required to make all court appearances as ordered by the court/Committee on Parole. Appropriate written notification of such appearances shall be furnished to the facility within two weeks of the scheduled appearance or when the probation and parole officer becomes aware of the hearing. The facility shall be responsible for transporting the offender for court/Committee on Parole appearances.

8. The maximum amount of time a parolee can reside in a facility is six months, unless a longer period is approved by the Committee on Parole. The maximum amount of time a probationer can reside in a facility is one year, unless a longer period is approved by the court. These time periods shall begin the first day the offender physically arrives at the facility.

9. The appropriate probation and parole district office shall be notified immediately of any unusual incident involving a probationer or parolee, including but not limited to, an arrest, an escape, an injury or removal from the program for rule violations. In addition, the appropriate law enforcement agency shall be notified immediately of any escapes or other criminal activity by an offender under probation and parole's supervision.

10. Prior to an offender being released, the appropriate probation and parole district office shall be notified of the release date in writing. The facility shall advise the offender to report to the assigned probation and parole officer within 48 hours after release. The facility must obtain an updated address and telephone number from the offender prior to release and provide this current information to the probation and parole officer. The offender should never be released without an address. If the offender should be unable to give a current residence address, the appropriate probation and parole district office shall be notified immediately.

AUTHORITY NOTE: Promulgated in accordance with R.S. 40:2851 and 2852.

HISTORICAL NOTE: Promulgated by the Department of Public Safety and Corrections, Corrections Services, LR 37:1408 (May 2011), amended LR 38:

Family Impact Statement

Amendment to the current Rule has no known impact on family formation, stability or autonomy, as described in R.S. 49:972.

Public Comments

Written comments may be addressed to Melissa Callahan, Deputy Assistant Secretary, Department of Public Safety and Corrections, P.O. Box 94304, Baton Rouge, LA 70804 until 4:30 p.m. on September 10, 2012.

James M. Le Blanc
Secretary

FISCAL AND ECONOMIC IMPACT STATEMENT FOR ADMINISTRATIVE RULES
RULE TITLE: Judicial Agency Referral Residential Facilities

I. ESTIMATED IMPLEMENTATION COSTS (SAVINGS) TO STATE OR LOCAL GOVERNMENT UNITS (Summary)

The proposed rule change will have no impact on state or local governmental expenditures. The rule change allows for judicial agency referral residential facilities that are certified by the Department of Corrections (DOC) to house offenders under the supervision of the Division of Probation and Parole. There is currently 1 facility certified by DOC. The Division of Probation and Parole would refer an offender to the facility and if the offender is accepted, then the offender will bear the cost of residing in the facility.

II. ESTIMATED EFFECT ON REVENUE COLLECTIONS OF STATE OR LOCAL GOVERNMENTAL UNITS (Summary)

There will be no impact on the Revenue Collections of state or local governmental units as a result of the proposed rule change.

III. ESTIMATED COSTS AND/OR ECONOMIC BENEFITS TO DIRECTLY AFFECTED PERSONS OR NONGOVERNMENTAL GROUPS (Summary)

There is no estimated cost and/or economic benefit to directly affected persons or non-governmental groups as a result of the proposed rule change.

IV. ESTIMATED EFFECT ON COMPETITION AND EMPLOYMENT (Summary)

There is no estimated effect on competition and employment as a result of the proposed rule change.

Thomas C. Bickham
Undersecretary
1208#070

Evan Brasseaux
Staff Director
Legislative Fiscal Office

NOTICE OF INTENT

Department of Public Safety and Corrections
Corrections Services

Louisiana Risk Review Panel (LAC 22:I.107)

The Department of Public Safety and Corrections, Corrections Services, in accordance with R.S. 36:404, hereby gives notice of its intent to repeal LAC 22:I.107 Louisiana Risk Review Panel in its entirety. This repeal is due to Act 123 of the 2012 Regular Session.

Title 22
CORRECTIONS, CRIMINAL JUSTICE AND LAW ENFORCEMENT
Part I. Corrections

Chapter I.Secretary's Office

§107. Louisiana Risk Review Panel

Repealed.

AUTHORITY NOTE: Promulgated in accordance with R.S. 49:953.

HISTORICAL NOTE: Promulgated by the Department of Public Safety and Corrections, Corrections Services, LR 28:94 (January 2002), amended LR 29:2847 (December 2003), LR 32:1069 (June 2006), repromulgated LR 32:1247 (July 2006), amended LR 36:528 (March 2010), LR 38:

Family Impact Statement

The proposed repeal of this Rule has no known impact on family formation, stability or autonomy, as described in R.S. 49:972.

Public Comments

Written comments may be addressed to Melissa Callahan, Deputy Assistant Secretary, Department of Public Safety and Corrections, P.O. Box 94304, Baton Rouge, LA 70804, until 4:30 p.m. on September 9, 2012.

James M. Le Blanc
Secretary

FISCAL AND ECONOMIC IMPACT STATEMENT FOR ADMINISTRATIVE RULES
RULE TITLE: Louisiana Risk Review Panel

I. ESTIMATED IMPLEMENTATION COSTS (SAVINGS) TO STATE OR LOCAL GOVERNMENT UNITS (Summary)

The proposed rule change will have a negligible decrease in state expenditures and no impact on local government expenditures. ACT 123 of the 2012 Regular Legislative Session repealed the Risk Review Panel. The duties of the Risk Review Panel were performed with existing Department of Corrections staff and resources. The repeal of the Risk Review Panel will not result in a decrease in positions.

II. ESTIMATED EFFECT ON REVENUE COLLECTIONS OF STATE OR LOCAL GOVERNMENTAL UNITS (Summary)

There will be no impact on the Revenue Collections of state or local governmental units as a result of the proposed rule change.

III. ESTIMATED COSTS AND/OR ECONOMIC BENEFITS TO DIRECTLY AFFECTED PERSONS OR NONGOVERNMENTAL GROUPS (Summary)

There is no estimated cost and/or economic benefit to directly affected persons or non-governmental groups.

IV. ESTIMATED EFFECT ON COMPETITION AND EMPLOYMENT (Summary)

There is no estimated effect on competition and employment as a result of the proposed rule change.

Thomas C. Bickham
Undersecretary
1208#071

Evan Brasseaux
Staff Director
Legislative Fiscal Office

NOTICE OF INTENT

Department of Public Safety and Corrections
Gaming Control Board

Electronic Submission of Documents (LAC 42:III.111, 401, 402, 403, XI.2403, 2405, 2407, 2409, 2417 and 2424)

The Louisiana Gaming Control Board hereby gives notice that pursuant to R.S. 27:15 and R.S. 27:24 it intends to promulgate LAC 42:III.401, 402, 403 and amends LAC 42:III.111 and 42:XI.2403, 2405, 2407, 2409, 2417 and 2424.

Title 42
LOUISIANA GAMING
Part III. Gaming Control Board

Chapter 1. General Provisions

§111. Delivery of Documents

A. All applications, notices and any other written communication or documentation required to be furnished to the board or division by any statutory provision, regulation or rule~~,~~ shall be submitted by U.S. mail, commercial carrier, electronic submission, hand delivery, or other board approved method of delivery.

B. Documentation delivered by any means other than as provided in §111.A shall not be accepted.

AUTHORITY NOTE: Promulgated in accordance with R.S. 27:1 et seq.

HISTORICAL NOTE: Promulgated by the Department of Public Safety and Corrections, Gaming Control Board, LR 23:1321 (October 1997), amended LR 38:

Chapter 4. Electronic Submission of Documents

§401. General

A. The board or division may accept the filing or delivery of any document as an original document by electronic transmission in accordance with the provisions of this Chapter.

B. An electronic document bearing an electronic signature legally binds, obligates and makes the signatory responsible to the same extent as the signatory's handwritten signature on a paper document.

C. Any document required to be subscribed or acknowledged before a notary public shall not be submitted electronically.

AUTHORITY NOTE: Promulgated in accordance with R.S. 27:15 and 24.

HISTORICAL NOTE: Promulgated by the Department of Public Safety and Corrections, Gaming Control Board, LR 38:

§402. Definitions

A. As used in this Chapter, the following words and terms shall have the following meanings:

Electronic Document—any document stored in a computer accessible electronic, magnetic, optical or other format which allows for future retrieval or electronic transmission by e-mail or the internet.

Electronic Signature—an electronic sound, symbol or process attached to or logically associated with an electronic document and executed or adopted by a person with the intent to sign the electronic document.

Subscriber—an applicant, permittee, casino operator or licensee who has submitted a subscriber agreement to the board or division and has received authorization to submit electronic documents.

Subscriber Agreement—an agreement by which a subscriber consents to be bound by the contents of the electronically submitted documents and consents to abide by the processes and procedures established for the submission and acceptance of electronic documents.

User—a person identified to the board or division by a subscriber as being authorized to submit electronic documents.

AUTHORITY NOTE: Promulgated in accordance with R.S. 27:15 and 24.

HISTORICAL NOTE: Promulgated by the Department of Public Safety and Corrections, Gaming Control Board, LR 38:

§403. Electronic Submission Procedure

A. Written communications or documentation, including applications, may be submitted to the board or division electronically, provided that:

1. the sender has executed a proper subscriber agreement in accordance with the procedures established by the board or division;

2. the sender transmits the electronic document to an electronic document receiving system designated by the board or division for receiving such submissions in accordance with the system requirements established for submission;

3. the electronic document is a true and accurate digital copy of the original document; and

4. the electronic document bears a valid electronic signature.

B. Nothing in this Chapter limits the use of an electronic document or information derived from an electronic document as evidence in enforcement or other legal or administrative proceedings.

AUTHORITY NOTE: Promulgated in accordance with R.S. 27:15 and 24.

HISTORICAL NOTE: Promulgated by the Department of Public Safety and Corrections, Gaming Control Board, LR 38:

Chapters 5-17. Reserved

Part XI. Video Poker

Chapters 1-23. Reserved

Chapter 24. Video Draw Poker

§2403. Definitions

A. ...

* * *

Notify or Notification—the act of providing notice of an event through written communication, including electronic transmission, as required by these rules.

* * *

AUTHORITY NOTE: Promulgated in accordance with R.S. 33:4862.1 et seq.

HISTORICAL NOTE: Promulgated by the Department of Public Safety and Corrections, Office of State Police, Gaming Enforcement Section, Video Gaming Division, LR 18:196 (February 1992), amended LR 21:582 (June 1995), amended by the Department of Public Safety and Corrections, Gaming Control Board, LR 30:266 (February 2004), repromulgated LR 30:439 (March 2004), amended LR 32:108 (January 2006), LR 36:2045 (September 2010), LR 38:

§2405. Application and License

A.1. All applications for a license shall be submitted on forms provided by the division.

2. An application is not complete nor is it considered filed with the division unless it is submitted with the required fee, is signed by the applicant, and contains all information required by the division.

3. All new and renewal applications shall be submitted to the division by the United States Postal Service certified or registered mail, return receipt requested, private or commercial interstate carrier, electronic submission in accordance with Chapter 4 of Part III of this Title, hand delivery or other board approved method of delivery.

4. - 9. ...

10. All applications shall contain a certification signed by a duly authorized representative of the applicant wherein the applicant certifies that:

a. the information contained therein is true and correct;

b. the applicant has read the Act and these rules, and any other informational materials supplied by the division that pertain to video gaming; and

c. the applicant agrees to comply with these rules and the Act.

11. All applications shall contain an email address, a telephone number and permanent mailing address for receipt of correspondence and service of documents by the division.

12. ...

13. The applicant shall notify the division in an electronic document or in writing of all changes of address, phone numbers, personnel, and other required information in the application within 10 business days of the effective date of the change.

14. - B.4.b. ...

5. All nonrefundable fees required for initial and renewal applications and any administrative fines or penalties shall be made payable to the Department of Public Safety and Corrections and remitted to the division in accordance with these rules.

B.6. - C.2. ...

D. Change of Ownership of Licensed Establishment

1. If a change in ownership of a licensed establishment occurs, the division shall be notified, in an electronic document or in writing within five days, of the Act of sale or transfer.

2. - 7. …

AUTHORITY NOTE: Promulgated in accordance with R.S. 27:15 and 24.

HISTORICAL NOTE: Promulgated by the Department of Public Safety and Corrections, Office of State Police, Gaming Enforcement Section, Video Gaming Division, LR 18:196 (February 1992), amended LR 21:582 (June 1995), amended by the Department of Public Safety and Corrections, Gaming Control Board, LR 23:1322 (October 1997), LR 24:955 (May 1998), LR 26:346 (February 2000), LR 26:2322 (October 2000), LR 27:61 (January 2001), LR 29:362 (March 2003), LR 30:267 (February 2004), repromulgated LR 30:439 (March 2004), amended LR 34:1037 (June 2008), LR 35:82 (January 2009), repromulgated LR 35:490 (March 2009), amended LR 36:2045 (September 2010), LR 38:

§2407. Operation of Video Draw Poker Devices

A. - B.2.…

3. All video draw poker employee applications must be submitted on forms prescribed by the Louisiana Gaming Control Board.

a. All applications shall be submitted to the division by the United States Postal Service certified or registered mail, return receipt requested, commercial interstate carrier, electronic submission in accordance with Chapter 4 of Part III of this Title, hand delivery or other board approved method of delivery.

b. All applications shall contain an email address, a telephone number and permanent address for receipt of correspondence and service of documents by the division.

3.c. - 4. ...

5. All video draw poker employees or applicants shall notify the division in an electronic document or in writing of all changes of address, phone numbers, and other required information in the application within 10 calendar days of the effective date of the change.

C.6. - D.16. ...

AUTHORITY NOTE: Promulgated in accordance with R.S. 27:15 and 24.

HISTORICAL NOTE: Promulgated by the Department of Public Safety and Corrections, Office of State Police, Gaming Enforcement Section, Video Gaming Division, LR 18:196 (February 1992), amended LR 21:582 (June 1995), amended by the Department of Public Safety and Corrections, Gaming Control Board, LR 25:85 (January 1999), LR 27:205 (February 2001), LR 30:267 (February 2004), repromulgated LR 30:441 (March 2004), amended LR 33:857 (May 2007), LR 36:2046 (September 2010), LR 36:2874 (December 2010), LR 38:

§2409. Revenues

A. License Fees

1. A nonrefundable annual fee as listed below shall be paid by each applicant:

a. manufacturer, as provided in R.S. 27:29.1;

b. distributor, as provided in R.S. 27:435;

c. service entity, as provided in R.S. 27:435;

d. device owner, as provided in R.S. 27:435; and

e. licensed establishment, as provided in 27:435.

2. All required license fees shall be submitted with the initial and renewal application.

3. All licensees shall pay their license fee(s) for the year in a single payment.

4. All license fees shall be paid by personal, company, certified or cashier's check, money order, electronic funds transfer or other form of electronic payment. If a payment is denied or returned for insufficient funds, the applicant's license shall not be issued.

B. - E.2.h. ...

AUTHORITY NOTE: Promulgated in accordance with R.S. 33:4862.1 et seq.

HISTORICAL NOTE: Promulgated by the Department of Public Safety and Corrections, Office of State Police, Gaming Enforcement Section, Video Gaming Division, LR 18:196 (February 1992), amended LR 21:582 (June 1995), amended by the Department of Public Safety and Corrections, Gaming Control Board, LR 30:268 (February 2004), repromulgated LR 30:442 (March 2004), amended LR 38:

§2417. Code of Conduct of Licensees and Permittees

A. - B.4.…

5. A licensee or permittee shall not intentionally make, cause to be made, or aid, assist, or procure another to make any false statement in any report, disclosure, application, permit form, electronic document, or any other document, including improperly notarized or certified documents, required by these rules or the Act.

C. - C.1.j. ...

AUTHORITY NOTE: Promulgated in accordance with R.S. 33:4862.1 et seq., R.S. 27:15 and 24.

HISTORICAL NOTE: Promulgated by the Department of Public Safety and Corrections, Office of State Police, Gaming Enforcement Section, Video Gaming Division, LR 18:197 (February 1992), amended LR 21:582 (June 1995), amended by the Department of Public Safety and Corrections, Gaming Control Board, LR 27:59 (January 2001), LR 30:270 (February 2004), repromulgated LR 30:447 (March 2004), amended LR 38:

§2424. Enforcement Actions of the Board

A. - C. ...

D. All civil penalties shall be paid by personal, company, certified or cashier's check, money order, electronic funds transfer or other form of electronic payment.

AUTHORITY NOTE: Promulgated in accordance with R.S. 33:4862.1 et seq.

HISTORICAL NOTE: Promulgated by the Department of Public Safety and Corrections, Louisiana Gaming Control Board. LR 36:2874 (December 2010), amended LR 38:

Small Business Impact Statement

Pursuant to the provisions of R.S. 49:965.5 the Louisiana Gaming Control Board, through its chairman, has concluded that there will be no adverse impact on small business if LAC 42:III.401, 402, 403 are enacted and LAC 42:III.111 and LAC 42:XI.2403, 2405, 2407, 2409 and 2424 are amended as the changes will not apply to small businesses.

Family Impact Statement

Pursuant to the provisions of R.S. 49:953(A), the Louisiana Gaming Control Board, through its chairman, has considered the potential family impact of adopting LAC 42:III.401, 402, 403 and amending LAC 42:III.111 and LAC 42:XI.2403, 2405, 2407, 2409 and 2424.

It is accordingly concluded that adopting LAC 42:III.401, 402, 403 and amending LAC 42:III.111 and LAC 42:XI.2403, 2405, 2407, 2409 and 2424 would appear to have no impact on the following:

1. the effect on stability of the family;

2. the effect on the authority and rights of parents regarding the education and supervision of their children;

3. the effect on the functioning of the family;

4. the effect on family earnings and family budget;

5. the effect on the behavior and personal responsibility of children;

6. the ability of the family or a local government to perform the function as contained in the proposed Rule.

Public Comments

All interested persons may contact Earl Pitre, Jr., Attorney General's Gaming Division, telephone (225) 326-6500, and may submit comments relative to this proposed Rule, through September 10, 2012, to 1885 North Third Street, Suite 500, Baton Rouge, LA 70802.

Dale A. Hall
Chairman

FISCAL AND ECONOMIC IMPACT STATEMENT FOR ADMINISTRATIVE RULES
RULE TITLE: Electronic Submission of Documents

I. ESTIMATED IMPLEMENTATION COSTS (SAVINGS) TO STATE OR LOCAL GOVERNMENT UNITS (Summary)

There is no anticipated direct material effect on state or local governmental expenditures as a result of the proposed Rule change. The Rule change will simplify the means by which the Louisiana Gaming Control Board ("board") or Louisiana State Police ("division") processes initial and renewal applications, application fees, civil penalties and other documents required to be submitted by statute or Rule by allowing applicants and licensees to electronically submit documents and the electronic transfer of funds for application fees and civil penalties.

II. ESTIMATED EFFECT ON REVENUE COLLECTIONS OF STATE OR LOCAL GOVERNMENTAL UNITS (Summary)

The Rule changes will not impact revenue collections for state or local governmental units.

III. ESTIMATED COSTS AND/OR ECONOMIC BENEFITS TO DIRECTLY AFFECTED PERSONS OR NONGOVERNMENTAL GROUPS (Summary)

Presently, applicants and licensees must submit documents by mail along with a check, draft, or similar paper instrument. The proposed Rules have the potential of reducing costs to applicants and licensees by allowing electronic submissions of documents and also allowing electronic transfers of funds for application fees and civil penalties.

IV. ESTIMATED EFFECT ON COMPETITION AND EMPLOYMENT (Summary)

The proposed administrative Rule changes will have no effect on competition and employment.

Dale A. Hall	Gregory V. Albrecht
Chairman	Chief Economist
1208#080	Legislative Fiscal Office

NOTICE OF INTENT

Department of Public Safety and Corrections
Gaming Control Board

Record Preparation Fees (LAC 42:III.109)

The Louisiana Gaming Control Board hereby gives notice that pursuant to R.S. 27:15 and R.S. 27:24 it intends to repeal LAC 42:III.109.

Title 42
LOUISIANA GAMING
Part III. Gaming Control Board
Chapter 1. General Provisions
§109. Record Preparation Fees

Repealed.

AUTHORITY NOTE: Promulgated in accordance with R.S. 27:1 et seq.

HISTORICAL NOTE: Promulgated by the Department of Public Safety and Corrections, Gaming Control Board, LR 23:304 (March 1997), repealed LR 38:

Small Business Impact Statement

Pursuant to the provisions of R.S. 49:965.5, the Louisiana Gaming Control Board, through its chairman, has concluded that there will be no adverse impact on small businesses if LAC 42:III.109 is repealed as the change will not apply to small businesses.

Family Impact Statement

Pursuant to the provisions of R.S. 49:953(A), the Louisiana Gaming Control Board, through its chairman, has considered the potential family impact of repealing LAC 42:III.109.

It is accordingly concluded that repealing LAC 42:III.109 would appear to have no impact on the following:

1. the effect on stability of the family;
2. the effect on the authority and rights of parents regarding the education and supervision of their children;
3. the effect on the functioning of the family;
4. the effect on family earnings and family budget;
5. the effect on the behavior and personal responsibility of children;
6. the ability of the family or a local government to perform the function as contained in the proposed Rule.

Public Comments

All interested persons may contact Earl Pitre, Jr., Attorney General's Gaming Division, telephone (225) 326-6500, and may submit comments relative to these proposed Rules, through September 10, 2012, to 1885 North Third Street, Suite 500, Baton Rouge, LA 70802.

Dale A. Hall
Chairman

FISCAL AND ECONOMIC IMPACT STATEMENT FOR ADMINISTRATIVE RULES
RULE TITLE: Record Preparation Fees

I. ESTIMATED IMPLEMENTATION COSTS (SAVINGS) TO STATE OR LOCAL GOVERNMENT UNITS (Summary)

The proposed Rule change will eliminate all expenditures associated with the existing accounting workload and processing of paperwork for funds the agency will not receive. The Rule change will repeal LAC 42:III.109.

II. ESTIMATED EFFECT ON REVENUE COLLECTIONS OF STATE OR LOCAL GOVERNMENTAL UNITS (Summary)

The proposed Rule change will result in an insignificant reduction of self-generated revenue collections for the Louisiana Gaming Control Board. The revenue impact is expected to be minimal, as only 31 of the 220 hearings held through mid-June of Fiscal Year 2012 were accompanied by the $100 fee, or $3,100. Of this amount, $500 was refunded resulting in total net collections of $2,600.

The proposed Rule change will not impact local governmental units.

III. ESTIMATED COSTS AND/OR ECONOMIC BENEFITS TO DIRECTLY AFFECTED PERSONS OR NONGOVERNMENTAL GROUPS (Summary)

Presently, applicants, permittees and licensees must deposit with the Gaming Control Board a sum of $100 as prepayment of the costs of preparing the administrative records and transcript. The proposed rule will reduce costs to applicants, permittees and licensees by eliminating the $100 fee to have an

administrative hearing. Hearings are currently conducted regardless of payment of this fee.

IV. ESTIMATED EFFECT ON COMPETITION AND EMPLOYMENT (Summary)

The proposed administrative Rule changes will have no effect on competition and employment.

Dale A. Hall	Evan Brasseaux
Chairman	Staff Director
1208#079	Legislative Fiscal Office

NOTICE OF INTENT

Department of Public Safety and Corrections
Office of State Police

Operator Qualifications (LAC 55:I.503)

Under the authority of R.S. 37:3270 et seq., and in accordance with the provisions of the Administrative Procedure Act, R.S. 49:950 et seq., the Office of State Police hereby proposes to amend section 503 under Chapter 5 to amend the qualifications for individuals to conduct breath analysis to remove the requirement that they be a resident of the state of Louisiana at the time of the application. The proposed Rule would amend the qualifications to require the operator be a POST certified law enforcement officer, which is not currently a requirement. The proposed Rule would also implement the language to allow for training from the Intoxilyzer 9000 manual or course.

Title 55
PUBLIC SAFETY
Part I. State Police
Chapter 5. Breath and Blood Alcohol Analysis Methods and Techniques
§503. Operator Qualifications

A. At the time of application for certification as an operator, an individual must:

1. be an employee of a Louisiana or federal law enforcement agency;

2. have successfully completed training established by and be certified by the Peace Officers Standards and Training Council (POST) or the Federal Law Enforcement Training Center (FLETC);

3. be at least 18 years of age;

4. be a high school graduate or satisfactorily pass the general education development (GED) test or an equivalent or higher educational background;

5. attain a score of 75 percent or better on a 16-hour operator's training course conducted by the applied technology unit. Course material to be covered will be taken from the *Chemical Test for Intoxication Training Manual* and/or the *Training Manual for the Intoxilyzer 5000* and/or *Training Manual for the Intoxilyzer 9000*. However, if an individual has already successfully completed a training course in chemical testing the individual may attend a specified course in the operation of the Intoxilyzer 5000 or Intoxilyzer 9000. To successfully complete the 16-hour training course and be certified to conduct breath analysis, the individual must:

a. obtain a 75 percent score on the written examination covering course material;

b. obtain a 75 percent score on the actual operation of the instrument and practical examination (running of an unknown alcohol solution). Both the written and the practical examination will be made up by the instructors of the applied technology unit.

AUTHORITY NOTE: Promulgated in accordance with R.S. 37:3270, et seq.

HISTORICAL NOTE: Promulgated by the Department of Public Safety and Corrections, Office of State Police, LR 4:390 (October 1978), amended LR 6:663 (November 1980), amended by the Department of Public Safety and Corrections, Office of State Police, LR 11:256 (March 1985), LR 14:362 (June 1998), repromulgated LR 14:442 (July 1998), amended LR 17:672 (July 1991), repromulgated LR 17:796 (August 1991), amended LR 27:1929 (November 2001), LR 32:1906 (October 2006), LR 38:

Family Impact Statement

1. The Effect of this Rule on the Stability of the Family. This Rule will have no effect on the stability of the family.

2. The Effect of this Rule on the Authority and Rights of Parents Regarding the Education and Supervision of their Children. This Rule will have no effect on the authority and rights of parents regarding the education and supervision of their children.

3. The Effect of this Rule on the Functioning of the Family. This Rule will have no effect on the functioning of the family.

4. The Effect of this Rule on Family Earnings and Family Budget. This Rule will have no effect on family earning and family budget.

5. The Effect of this Rule on the Behavior and Personal Responsibility of Children. This Rule will have no effect on the behavior and personal responsibility of children.

6. The Effect of this Rule on the Ability of the Family or Local Government to Perform the Function as Contained in the Proposed Rules. This Rule will have no effect on the ability of the family or local government to perform the function as contained in the proposed Rule.

Public Comments

Interested persons may submit written comments or requests for public hearing on this proposed Rule change to Laura Hopes, Department of Public Safety and Corrections, Public Safety Services, Office of Legal Affairs, at 7979 Independence Blvd., Suite 302, Baton Rouge, LA 70806. Comments will be accepted through close of business September 10, 2012.

Jill Boudreaux
Undersecretary

FISCAL AND ECONOMIC IMPACT STATEMENT FOR ADMINISTRATIVE RULES
RULE TITLE: Operator Qualifications

I. ESTIMATED IMPLEMENTATION COSTS (SAVINGS) TO STATE OR LOCAL GOVERNMENT UNITS (Summary)

There are no anticipated implementation costs or savings to state or local governmental units resulting from the proposed rule. The proposed rule modifies the qualifications for the certification of individuals who conduct breath analysis by eliminating the state residency requirement and additionally

requiring that all operators of a blood/breath alcohol testing device be certified by the Peace Officer Standards and Training Council (POST) or the Federal Law Enforcement Training Center (FLETC). The proposed rule incorporates language to allow for training from the Intoxilyzer 9000 manual or course.

II. ESTIMATED EFFECT ON REVENUE COLLECTIONS OF STATE OR LOCAL GOVERNMENTAL UNITS (Summary)

There is no anticipated effect on revenue collections for state or local governmental units.

III. ESTIMATED COSTS AND/OR ECONOMIC BENEFITS TO DIRECTLY AFFECTED PERSONS OR NONGOVERNMENTAL GROUPS (Summary)

There is no anticipated effect on costs and/or economic benefit to directly affected persons or non-governmental groups.

IV. ESTIMATED EFFECT ON COMPETITION AND EMPLOYMENT (Summary)

The proposed administrative rule change removes the Louisiana residency requirement as a condition of blood/breath alcohol testing. Law enforcement officers who work in Louisiana and who are POST certified but live out of state will now meet the operator qualifications. Individuals can be trained from the Intoxilyzer 9000 manual or take a course on the Intoxilyzer 9000 once the piece of equipment is placed into distribution in the State of Louisiana.

Jill Boudreaux
Undersecretary
1208#069

Evan Brasseaux
Staff Director
Legislative Fiscal Office

NOTICE OF INTENT

Department of Revenue
Office of Alcohol and Tobacco Control

Regulation III—Prohibitive Acts—Vending Machines
(LAC 55:VII.305)

Under the authority of R.S. 26:90 and R.S. 26:286 and in accordance with the provisions of the Administrative Procedure Act, R.S. 49:950 et seq., the Department of Revenue, Office of Alcohol and Tobacco Control, proposes to amend LAC 55:VII.305 relative to prohibitive acts on or about the licensed premises of alcoholic beverage retail dealers.

This proposed amendment to the above-referenced Rule is offered under authority delegated by and at the direction of the Louisiana Legislature in its amendment and re-enactment of R.S. 26:90 and R.S. 26:286 through Act 764 of the 2012 Regular Session to promulgate rules relative to the sale, dispensing, or distribution of beverages of high and low alcoholic beverage content in any type of automatic mechanical vending machine activated by the use of a coin, token, or similar instrument in Class A establishments to provide procedures for the prevention of access to such machines by underage or intoxicated persons.

Title 55
PUBLIC SAFETY
Part VII. Alcohol and Tobacco Control
Chapter 3. Liquor Credit Regulations
§305. Regulation III—Prohibitive Acts

A. - D.1.…

2. Violation of Subsection D subjects the retail dealer to penalties provided in R.S. 26:96 and/or R.S. 26:292, including but not limited to suspension or revocation of his permit and penalty provisions in R.S. 26:171.

E. No retailer may allow the sale, dispensing, or distribution of beverages of high or low alcoholic content in any type of automatic mechanical vending machine activated by the use of a coin, token, or similar instrument except in Class A establishments and subject to the following:

1. All state laws regulating retail establishments, including but not limited to, the legal drinking age, service to intoxicated persons, etc. apply and it is the responsibility of the retail dealer to ensure that his business is at all times compliant with all applicable laws and regulations. Violation of any such laws or regulations on the licensed premises will subject the retail dealer to penalties provided in R.S. 26:96 and/or R.S. 26:292, including but not limited to suspension or revocation of his permit and penalty provisions in R.S. 171.

2. All automatic mechanical vending machines are located in a facility where at least one employee is on duty during all hours of operation.

3. All automatic mechanical vending machines are located such that they are within the unobstructed line of sight and within 25 feet of at least one employee during all hours of operation.

4. All patrons must submit to an employee of the retail dealer a valid driver's licenses, selective service card, or other lawful identification which on its face establishes the age of the person as 21 years or older and there is no reason to doubt the authenticity and correctness of the identification prior to approaching any automatic mechanical vending machine containing alcoholic beverages of high or low alcoholic content.

5. All automatic vending machines must be under functioning video surveillance during all hours of operation.

AUTHORITY NOTE: Promulgated in accordance with R.S. 26:90 and R.S. 26:286.

HISTORICAL NOTE: Adopted by the Department of Public Safety, Office of Alcoholic Beverage Control, 1968, amended in 1973, filed at the Office of the State Register, 1974, amended by the Department of Revenue, Office of Alcohol and Tobacco Control, LR 31:2034 (August 2005), LR 31:2035 (August 2005), LR 38:

Family Impact Statement

As required by Act 1183 of the Regular Session of the Louisiana Legislature, the following Family Impact Statement is submitted for publishing with the Notice of Intent in the Louisiana Register. A copy of this statement will also be provided to the legislative oversight committees.

The Effect on the Stability of the Family. Implementation of this proposed Rule and/or amendment will have no effect on the stability of the family.

The Effect on the Authority and Rights of Parents Regarding the Education and Supervision of Their Children. Implementation of this proposed Rule and/or amendment will have no effect on the authority and rights of parents regarding the education and supervision of their children.

The Effect on the Functioning of the Family. Implementation of this proposed Rule and/or amendment will have no effect on the functioning of the family.

The Effect on the Family Earnings and Budget. Implementation of this proposed Rule and/or amendment will have no effect on family earnings and budget.

The Effect on Behavior and Personal Responsibility of Children. Implementation of this proposed Rule and/or amendment will have no effect on behavior and responsibility of children.

The Ability of the Family or Local Government to Perform the Function as Contained in the Proposed Rule. Implementation of this proposed Rule and/or amendment will have no effect on the ability of the family or local government to perform this function.

Public Comments

Interested persons may submit data, views, or arguments, in writing to Commissioner Troy M. Hebert, Office of Alcohol and Tobacco Control, 8585 Archives Avenue, Suite 220, Baton Rouge, LA 70809; P.O. Box 66404, Baton Rouge, LA 70896-6404; or via facsimile to (225) 922-0011. All comments must be submitted by 4:00 p.m. on Friday, September 28, 2012.

Public Hearing

A public hearing will be held on Friday, September 28, 2012 at 4:00 p.m. in the Office of Alcohol and Tobacco Control at 8585 Archives Avenue, 2nd Floor in Baton Rouge, LA.

Troy Hebert
Commissioner

FISCAL AND ECONOMIC IMPACT STATEMENT FOR ADMINISTRATIVE RULES
RULE TITLE: Regulation III—Prohibitive Acts—Vending Machines

I. ESTIMATED IMPLEMENTATION COSTS (SAVINGS) TO STATE OR LOCAL GOVERNMENT UNITS (Summary)

Promulgation of this proposed amendment will not result in any costs or savings to state or local governmental units. Rather, this proposed amendment is adopted under authority delegated by and at the direction of the Louisiana Legislature in its amendment and re-enactment of R.S. 26:90 and R.S. 26:286 through Act 764 of the 2012 Regular Session to promulgate Rules relative to the sale, dispensing, or distribution of beverages of high and low alcoholic beverage content in any type of automatic mechanical vending machine activated by the use of a coin, token, or similar instrument in Class A establishments to provide procedures for the prevention of access to such machines by underage or intoxicated persons.

II. ESTIMATED EFFECT ON REVENUE COLLECTIONS OF STATE OR LOCAL GOVERNMENTAL UNITS (Summary)

Promulgation of this proposed amendment will not affect revenue collections of state or local governmental units.

III. ESTIMATED COSTS AND/OR ECONOMIC BENEFITS TO DIRECTLY AFFECTED PERSONS OR NONGOVERNMENTAL GROUPS (Summary)

Promulgation of this proposed amendment will not result in any costs and/or economic benefits to directly affected persons or non-governmental groups.

IV. ESTIMATED EFFECT ON COMPETITION AND EMPLOYMENT (Summary)

This proposed amendment will have no impact on competition and employment.

Troy M. Hebert
Commissioner
1208#092

Gregory V. Albrecht
Chief Economist
Legislative Fiscal Office

NOTICE OF INTENT

Department of Revenue
Office of Alcohol and Tobacco Control

Regulation VII—Procedures Determined for Issuing Permits
(LAC 55:VII.315)

In accordance with R.S. 26:71.1(1)(h) and 271.2(1)(h) and the provisions of the Administrative Procedure Act, R.S 49:950 et seq., the Department of Revenue, Office of Alcohol and Tobacco Control, proposes to amend LAC 55.VII 315 to repeal current regulations relative to public restroom requirements in Class A-General establishments.

This proposed amendment to the above-referenced Rule is offered to comply with provisions of Act 287 of the 2012 Regular Session of the Louisiana Legislature whereby R.S. 26:71.1(1)(h) and 271.2(1)(h) were amended and re-enacted to repeal the commissioners authority to promulgate Rules regarding requirements related to the number and location of public restrooms to be used in conjunction with the licensed premises of each Class A-General retail permit and to require that Class A-General retail establishments comply with the Department of Health and Hospitals guidelines for the required number of public restrooms and their locations within the retail establishments.

Title 55
PUBLIC SAFETY
Part VII. Alcohol and Tobacco Control
Chapter 3. Liquor Credit Regulations
§315. Regulation VII – Procedures Determined for Issuing Permits

A. Except as otherwise provided for by law and these regulations, all alcoholic beverage permits shall be issued for a period of no more than one year.

B. Notwithstanding Subsection A of this Section, the commissioner may issue alcoholic beverage permits which are valid for two years to applicants in good standing with the office of alcohol and tobacco control. Obtaining a two year permit shall not be mandatory for qualified applicants. Qualified applicants electing not to obtain a two year permit shall make application under the provisions of Subsection B of this Section.

C. For purposes of this Section, good standing shall mean any original or renewal applicant for a retail, wholesale, or manufacturer/brewer alcoholic beverage permit who has not been issued a warning, pled or been found guilty of any violations of Title 26 and/or the regulations promulgated thereunder more than once during the two year period preceding the original or renewal application date.

D. Permit fees for the entire permit period shall be due upon submission of an original or renewal application.

AUTHORITY NOTE: Promulgated in accordance with R.S. 26:71.1(1)(h) and 271.2(1)(h).

HISTORICAL NOTE: Promulgated by the Department of Revenue, Office of Alcoholic Beverage Control, LR 28:346 (February 2002), amended LR 38:144 (January 2012), LR 38:

Family Impact Statement

As required by Act 1183 of the Regular Session of the Louisiana Legislature, the following Family Impact Statement is submitted for publishing with the notice of

intent in the *Louisiana Register*. A copy of this statement will also be provided to the legislative oversight committees.

1. The Effect on the Stability of the Family. Implementation of this proposed Rule and/or amendment will have no effect on the stability of the family.

2. The Effect on the Authority and Rights of Parents Regarding the Education and Supervision of Their Children. Implementation of this proposed Rule and/or amendment will have no effect on the authority and rights of parents regarding the education and supervision of their children.

3. The Effect on the Functioning of the Family. Implementation of this proposed Rule and/or amendment will have no effect on the functioning of the family.

4. The Effect on the Family Earnings and Budget. Implementation of this proposed Rule and/or amendment will have no effect on family earnings and budget.

5. The Effect on Behavior and Personal Responsibility of Children. Implementation of this proposed Rule and/or amendment will have no effect on behavior and responsibility of children.

6. The Ability of the Family or Local Government to Perform the Function as Contained in the Proposed Rule. Implementation of this proposed Rule and/or amendment will have no effect on the ability of the family or local government to perform this function.

Public Comments

Interested persons may submit data, views, or arguments, in writing to Commissioner Troy M. Hebert, Office of Alcohol and Tobacco Control, 8585 Archives Avenue, Suite 220, Baton Rouge, Louisiana 70809; P.O. Box 66404, Baton Rouge, Louisiana 70896-6404; or via facsimile to (225) 922-0011. All comments must be submitted by 4:00 p.m. on Friday, September 28, 2012.

Public Hearing

A public hearing will be held on Friday, September 28, 2012 at 4:00 p.m. in the Office of Alcohol and Tobacco Control at 8585 Archives Avenue, 2nd Floor in Baton Rouge, Louisiana.

Troy Hebert
Commissioner

FISCAL AND ECONOMIC IMPACT STATEMENT FOR ADMINISTRATIVE RULES
RULE TITLE: Regulation VII
Procedures Determined for Issuing Permits

I. ESTIMATED IMPLEMENTATION COSTS (SAVINGS) TO STATE OR LOCAL GOVERNMENT UNITS (Summary)

Promulgation of this proposed amendment will not result in any costs or savings to state or local governmental units. Rather, this proposed amendment is adopted to comply with provisions of Act 287 of the 2012 Regular Session of the Louisiana Legislature whereby R.S. 26:71.1(1)(h) and 271.2(1)(h) were amended and re-enacted to repeal the commissioners authority to promulgate rules regarding requirements related to the number and location of public restrooms to be used in conjunction with the licensed premises of each Class A-General retail permit and to require that Class A-General retail establishments comply with the Department of Health and Hospitals (DHH) guidelines for the required number of public restrooms and their locations within the retail establishments.

The Office of Public Health within DHH also indicates that these efforts are currently undertaken and will have no fiscal impact beyond that of the current budget.

II. ESTIMATED EFFECT ON REVENUE COLLECTIONS OF STATE OR LOCAL GOVERNMENTAL UNITS (Summary)

Promulgation of this proposed amendment will not affect revenue collections of state or local governmental units.

III. ESTIMATED COSTS AND/OR ECONOMIC BENEFITS TO DIRECTLY AFFECTED PERSONS OR NONGOVERNMENTAL GROUPS (Summary)

Promulgation of this proposed amendment will not result in any costs and/or economic benefits to directly affected persons or non-governmental groups.

IV. ESTIMATED EFFECT ON COMPETITION AND EMPLOYMENT (Summary)

This proposed amendment will have no impact on competition and employment.

Troy M. Hebert	Gregory V. Albrecht
Commissioner	Chief Economist
1208#091	Legislative Fiscal Office

NOTICE OF INTENT

Department of Revenue
Office of Alcohol and Tobacco Control

Regulation IX—Prohibition of Certain Unfair Business Practices (LAC 55:VII.317)

Under the authority of R.S. 26:150 and in accordance with the provisions of the Administrative Procedures Act, R.S. 49:950, et seq., the Department of Revenue, Office of Alcohol and Tobacco Control, proposes to amend LAC 55:VII.317 relative to unfair business practices.

This proposed amendment to the above-referenced rule is offered under authority delegated by and at the direction of the Louisiana Legislature in its amendment and re-enactment of R.S. 26:150 to promulgate Rules relative to unfair business practices.

Title 55
PUBLIC SAFETY
Part VII. Alcohol and Tobacco Control
Chapter 3. Liquor Credit Regulations
§317. Regulation IX—Prohibition of Certain Unfair Business Practices

A - C.2.a.iii. …

b. Inside Signs

i. An industry member may furnish, give, rent, loan, or sell to a retailer inside signs that bear advertising matter. Inside signs include such things as mechanical devices, illuminated devices, clocks, neon signs, and other devices that are designed for permanent use in a retail account. These items may be furnished to an industry member if the total value of each sign in use at any one time does not exceed $350 to any one retail establishment, including all expenses incurred directly or indirectly by any industry member in connection with the purchase, manufacture, transportation, and assembly of such items and accessories. The industry member shall not directly or indirectly pay or credit the retailer for displaying such material or any expense incidental to their operation. In determining the value of these items for purposes of the limitation, value shall be the cost attributable to them at the

time of their installation in the retail establishment. No retail establishment shall exclusively display inside signs from the same industry member.

b.ii. - e.i. …

ii. T-shirts, caps, and similar items may be given to event contestants or patrons of the retail establishment but the total cost of these items may not exceed $250 per event.

ii. - vii. …

f. Trade Calls

i. Bar spending during trade calls, where the alcohol purchased by a manufacturer or wholesaler for a consumer is consumed on retail licensed premises in the presence of the giver, shall be lawful so long as the state's laws regulating retail establishments such as the legal drinking age, etc., are observed and not more than $250 is expended during the trade call.

f.ii. - j.ii.(c). …

iii. Out-dated product or product that is within 30 days of date code expiration may be exchanged for other products. Products for which there is only a limited seasonal demand, such as holiday decanters and distinctive containers, may only be exchanged for non-distinctive like products.

C.2.k. – E. …

AUTHORITY NOTE: Promulgated in accordance with R.S. 26:150

HISTORICAL NOTE: Promulgated by the Department of Public Safety, Office of Alcoholic Beverage Control, LR 4:463 (November 1978), amended LR 5:11 (January 1979), amended by the Department of Public Safety and Corrections, Office of Alcoholic Beverage Control, LR 17:607 (June 1991), LR 20:671 (June 1994), amended by the Department of Revenue and Taxation, Office of Alcoholic Beverage Control, LR 22:116 (February 1996), LR 26:2631 (November 2000), LR 28:1484 (June 2002), LR 31:1344 (June 2005), amended by the Louisiana Department of Revenue, Office of Alcohol and Tobacco Control, LR 35:89 (January, 2009), amended by the Department of Revenue, Office of Alcohol and Tobacco Control, LR 38:1286 (May 2012), LR 38:

Family Impact Statement

As required by Act 1183 of the Regular Session of the Louisiana Legislature, the following Family Impact Statement is submitted for publishing with the notice of intent in the Louisiana Register. A copy of this statement will also be provided to the legislative oversight committees.

1. The Effect on the Stability of the Family. Implementation of this proposed Rule and/or amendment will have no effect on the stability of the family.

2. The Effect on the Authority and Rights of Parents Regarding the Education and Supervision of Their Children. Implementation of this proposed Rule and/or amendment will have no effect on the authority and rights of parents regarding the education and supervision of their children.

3. The Effect on the Functioning of the Family. Implementation of this proposed Rule and/or amendment will have no effect on the functioning of the family.

4. The Effect on the Family Earnings and Budget. Implementation of this proposed Rule and/or amendment will have no effect on family earnings and budget.

5. The Effect on Behavior and Personal Responsibility of Children. Implementation of this proposed Rule and/or amendment will have no effect on behavior and responsibility of children.

6. The Ability of the Family or Local Government to Perform the Function as Contained in the Proposed Rule. Implementation of this proposed Rule and/or amendment will have no effect on the ability of the family or local government to perform this function.

Public Comments

Interested persons may submit data, views, or arguments, in writing to Commissioner Troy M. Hebert, Office of Alcohol and Tobacco Control, 8585 Archives Avenue, Suite 220, Baton Rouge, LA 70809; P.O. Box 66404, Baton Rouge, LA 70896-6404; or via facsimile to (225) 922-0011. All comments must be submitted by 4:00 p.m. on Friday, September 28, 2012.

Public Hearing

A public hearing will be held on Friday, September 28, 2012 at 4:00 p.m. in the Office of Alcohol and Tobacco Control at 8585 Archives Avenue, 2nd Floor in Baton Rouge, Louisiana.

Troy Hebert
Commissioner

FISCAL AND ECONOMIC IMPACT STATEMENT FOR ADMINISTRATIVE RULES
RULE TITLE: Regulation IX—Prohibition of Certain Unfair Business Practices

I. ESTIMATED IMPLEMENTATION COSTS (SAVINGS) TO STATE OR LOCAL GOVERNMENT UNITS (Summary)

Promulgation of this proposed amendment will not result in any costs or savings to state or local governmental units. Rather, this proposed amendment is adopted under authority delegated by and at the direction of the Louisiana Legislature in its amendment and re-enactment of R.S. 26:150 which mandates that the commissioner adopt and promulgate rules to prevent any unfair practices in the sale of any regulated beverages. The current amendment increases the value of signs that can be provided by an industry member to a retail dealer from a total of $225 to $350 per sign and increases the length of time that out-dated products may be exchanged from within 21 days of expiration to within 30 days of expiration of said product.

II. ESTIMATED EFFECT ON REVENUE COLLECTIONS OF STATE OR LOCAL GOVERNMENTAL UNITS (Summary)

Promulgation of this proposed amendment will not affect revenue collections of state or local governmental units.

III. ESTIMATED COSTS AND/OR ECONOMIC BENEFITS TO DIRECTLY AFFECTED PERSONS OR NONGOVERNMENTAL GROUPS (Summary)

Promulgation of this proposed amendment will not result in any costs and/or economic benefits to directly affected persons or non-governmental groups. However, these persons or groups will be subject to the adjusted limitations related to industry signage and products in their establishments.

IV. ESTIMATED EFFECT ON COMPETITION AND EMPLOYMENT (Summary)

This proposed amendment will have no impact on competition and employment.

Troy M. Hebert	Gregory V. Albrecht
Commissioner	Chief Economist
1208#089	Legislative Fiscal Office

NOTICE OF INTENT

Department of Revenue
Office of Alcohol and Tobacco Control

Tobacco Permits (LAC 55:VII.3103, 3107, and 3109)

Under the authority of R.S. 26:902, 903 and 904, and in accordance with the provisions of the Administrative Procedure Act, R.S 49:950 et seq., the Department of Revenue, Office of Alcohol and Tobacco Control, proposes to amend LAC 55.VII 3103, 3107, and 3109 to provide for classes of tobacco permits and the associated fees.

This proposed amendment to the above-referenced Rules is adopted to comply and correlate with the provisions of R.S. 902, 903, 904 as amended and re-enacted through Act 143 of the 2012 Regular Legislative Session which provides for a single class of permits for tobacco retail dealers and states the associated fees.

Title 55
PUBLIC SAFETY
Part VII. Alcohol and Tobacco Control
Chapter 31. Tobacco Permits
§3103. Identifying Information for Permits

A. Permits

1. A retail dealer permit shall be issued to a dealer other than a wholesale dealer, tobacconist, or vending machine operator for each retail outlet where cigars, cigarettes, or other tobacco products are offered for sale either over the counter or by vending machine.

2. A tobacconist permit shall be issued to a dealer engaged in receiving bulk smoking tobacco for the purpose of blending such tobacco for retail sale at a particular outlet where 50 percent or more of the total purchases for the preceding 12 months were purchases of tobacco products, excluding cigarettes, for each retail outlet where cigars, cigarettes, or other tobacco products are offered for sale either over the counter or by vending machine.

3. A vending machine operator permit shall be issued to a vending machine operator operating one or more vending machines. Licensed wholesale dealers who operate vending machines shall not be required to obtain a vending machine operator permit.

4. A vending machine permit shall be issued to the vending machine operator or wholesale dealer for each vending machine he operates and such permit shall be affixed to the upper front surface of the vending machine.

5. A wholesale dealer permit shall be issued to a wholesale dealer for each wholesale place of business operated by the wholesale dealer.

B. The following identifying information shall be listed on the face of all retail dealer permits, vending machine operator permits, and wholesale dealer permits:

1. the name of the license holder;
2. the name and address of the establishment for which the license is obtained;
3. the license number;
4. the dates of issuance and expiration;
5. the amount paid for the license.

C. The following identifying information shall be listed on the face of all vending machine permits:

1. the name of the license holder;
2. the vending machine operator permit number;
3. the vending machine permit number;
4. the address for the location of the vending machine;
5. the date of expiration.

AUTHORITY NOTE: Promulgated in accordance with R.S. 26:902.

HISTORICAL NOTE: Promulgated by the Department of Revenue, Office of Alcohol and Tobacco Control, LR 24:1320 (July 1998), amended LR 38:145 (January 2012), LR 38:

§3107. Expiration of Licenses

A. The expiration of Retail Dealer Permits shall be staggered to expire in accordance with the following schedule.

Parish Code	Parish Name	Month Permit Expires
01	Acadia	October
02	Allen	March
03	Ascension	January
04	Assumption	November
05	Avoyelles	July
06	Beauregard	March
07	Bienville	September
08	Bossier	September
09	Caddo	September
10	Calcasieu	March
11	Caldwell	December
12	Cameron	March
13	Catahoula	December
14	Claiborne	September
15	Concordia	December
16	DeSoto	September
17	East Baton Rouge	January
18	East Carroll	December
19	East Feliciana	August
20	Evangeline	July
21	Franklin	December
22	Grant	December
23	Iberia	October
24	Iberville	July
25	Jackson	December
26	Jefferson	February
27	Jefferson Davis	March
28	Lafayette	October
29	Lafourche	November
30	LaSalle	December
31	Lincoln	September
32	Livingston	August
33	Madison	December
34	Morehouse	December
35	Natchitoches	December
36	Orleans	May
37	Ouachita	December
38	Plaquemines	April
39	Point Coupee	July
40	Rapides	July
41	Red River	September
42	Richland	December
43	Sabine	September
44	St. Bernard	April
45	St. Charles	April
46	St. Helena	August
47	St. James	April
48	St. John	April
49	St. Landry	July
50	St. Martin	October
51	St. Mary	November
52	St. Tammany	August
53	Tangipahoa	August
54	Tensas	December
55	Terrebonne	November

Parish Code	Parish Name	Month Permit Expires
56	Union	December
57	Vermillion	March
58	Vernon	March
59	Washington	August
60	Webster	September
61	West Baton Rouge	July
62	West Carroll	December
63	West Feliciana	August
64	Winn	December

B. All Vending Machine Operator Permits shall expire each year on June 30.

C. All Vending Machine Permits shall expire each year on June 30.

D. All Wholesale Dealer Permits shall expire each year on December 31.

AUTHORITY NOTE: Promulgated in accordance with R.S. 26:904.

HISTORICAL NOTE: Promulgated by the Department of Revenue, Office of Alcohol and Tobacco Control, LR 24:1320 (July 1998), amended LR 38:

§3109. Initial Application and Related Fees

A. Tobacco Permits

1. Except as otherwise provided by law and these regulations, tobacco permits shall be issued for a period of no more than one year.

2. Notwithstanding Paragraph A.1 of this Section, the commissioner may issue tobacco permits which are valid for two years to applicants in good standing with the office of alcohol and tobacco control with the fees for the entire permit period being due upon the submission of the original or renewal application. Obtaining a two year permit shall not be mandatory for qualified applicants. Qualified applicants electing not to obtain a two year certificate shall make application under the provisions of Paragraph A.1 of this Section.

2. For purposes of this Section, *good standing* shall mean any original or renewal applicant for a tobacco permit who has not been issued a warning, pled or been found guilty of any violations of Title 26 and/or the regulations promulgated thereunder more than once during the two year period preceding the original or renewal application date.

B. The fee for a retail dealer permit shall be $25 per year or any portion thereof, as established in Title 26 of the Revised Statutes.

C. The fee for a vending machine operator permit shall be $75 per year or any portion thereof, as established in Title 26 of the Revised Statutes.

D. The fee for a vending machine permit shall be $5 per machine per year or any portion thereof, as established in Title 26 of the Revised Statutes.

E. The fee for a wholesale dealer permit shall be $75 per year or any portion thereof, as established in Title 26 of the Revised Statutes.

F. Pursuant to Title 26 of the Revised Statutes, the fee for a tobacconist permit shall be $100 per year or any portion thereof based on the effective rate as of August 15, 2010.

AUTHORITY NOTE: Promulgated in accordance with R.S. 26:903.

HISTORICAL NOTE: Promulgated by the Department of Revenue, Office of Alcohol and Tobacco Control, LR 24:1321 (July 1998), amended LR 38:145, 146 (January 2012), LR 38:

Family Impact Statement

As required by Act 1183 of the Regular Session of the Louisiana Legislature, the following Family Impact Statement is submitted for publishing with the notice of intent in the *Louisiana Register*. A copy of this statement will also be provided to the legislative oversight committees.

1. The Effect on the Stability of the Family. Implementation of this proposed Rule and/or amendment will have no effect on the stability of the family.

2. The Effect on the Authority and Rights of Parents Regarding the Education and Supervision of Their Children. Implementation of this proposed Rule and/or amendment will have no effect on the authority and rights of parents regarding the education and supervision of their children.

3. The Effect on the Functioning of the Family. Implementation of this proposed Rule and/or amendment will have no effect on the functioning of the family.

4. The Effect on the Family Earnings and Budget. Implementation of this proposed Rule and/or amendment will have no effect on family earnings and budget.

5. The Effect on Behavior and Personal Responsibility of Children. Implementation of this proposed Rule and/or amendment will have no effect on behavior and responsibility of children.

6. The Ability of the Family or Local Government to Perform the Function as Contained in the Proposed Rule. Implementation of this proposed Rule and/or amendment will have no effect on the ability of the family or local government to perform this function.

Public Comments

Interested persons may submit data, views, or arguments, in writing to Commissioner Troy M. Hebert, Office of Alcohol and Tobacco Control, 8585 Archives Avenue, Suite 220, Baton Rouge, LA 70809; P.O. Box 66404, Baton Rouge, LA 70896-6404; or via facsimile to (225) 922-0011. All comments must be submitted by 4:00 p.m. on Friday, September 28, 2012.

Public Hearing

A public hearing will be held on Friday, September 28, 2012 at 4:00 p.m. in the Office of Alcohol and Tobacco Control at 8585 Archives Avenue, 2nd Floor in Baton Rouge, LA.

Troy Hebert
Commissioner

FISCAL AND ECONOMIC IMPACT STATEMENT FOR ADMINISTRATIVE RULES
RULE TITLE: Tobacco Permits

I. ESTIMATED IMPLEMENTATION COSTS (SAVINGS) TO STATE OR LOCAL GOVERNMENT UNITS (Summary)

The proposed amendment is adopted to comply and correlate with the provisions of R.S. 902, 903, 904 as amended and re-enacted through Act 143 of the 2012 Regular Legislative Session which provides for a single class of permits for tobacco retail dealers and states the associated fees. Small savings to the

agency may be experienced through elimination of multiple classes of tobacco retail permits allowing more resources to be directed toward other areas of the agency's mission.

II. ESTIMATED EFFECT ON REVENUE COLLECTIONS OF STATE OR LOCAL GOVERNMENTAL UNITS (Summary)

Act 143 of 2012 eliminated the tobacco retail dealer registration certificate and reduced the fee for both the tobacco retail dealer permit and tobacconist permit by $50 each. However, these fee reductions are expected to be minimal. Currently, ATC records 230 tobacco retail dealer permits issued and 28 tobacconist permits issued in the state. Using these figures as an estimate of annual renewals, potential reductions in revenue from fees total $12,900 (258 * $50).

III. ESTIMATED COSTS AND/OR ECONOMIC BENEFITS TO DIRECTLY AFFECTED PERSONS OR NONGOVERNMENTAL GROUPS (Summary)

Those entities subject to the lower fees will remit less than what was required prior to the proposed rule. An estimate of the total amount retained by this group would be equal to the calculation of $12,900 in Section II.

IV. ESTIMATED EFFECT ON COMPETITION AND EMPLOYMENT (Summary)

This proposed amendment will have no impact on competition and employment since all similar entities have the same requirements and obligations.

Troy M. Hebert	Gregory V. Albrecht
Commissioner	Chief Economist
1208#090	Legislative Fiscal Office

NOTICE OF INTENT

Department of Revenue
Policy Services Division

Income Tax Credits for Wind or Solar Energy Systems
(LAC 61:I.1907)

Under the authority of R.S. 47:287.785, R.S. 47:295, R.S. 47:1511, and R.S. 47:6030, and in accordance with the provisions of the Administrative Procedure Act, R.S. 49:950 et seq., the Department of Revenue, Policy Services Division, proposes to amend LAC 61:I.1907 relative to income tax credits for wind or solar energy systems.

This amendment to the Rule clarifies the application of the credits for those taxpayers who purchase and install wind or solar energy systems.

Title 61
REVENUE AND TAXATION
Part I. Taxes Collected and Administered By the Secretary of Revenue
Chapter 19. Miscellaneous Tax Exemptions
§1907. Income Tax Credits for Wind or Solar Energy Systems

A. Revised Statute 47:6030 provides an income tax credit for the purchase and installation of a wind or solar energy system by a Louisiana taxpayer, the owner of a residential rental apartment project, or by a taxpayer who purchases and installs such a system in a residence or a residential rental apartment project which is located in the state. In order for costs associated with the purchase and installation of a wind or solar energy system to qualify for this credit, the expenditure must be made on or after January 1, 2008. The amount of the credit is equal to 50 percent of the first $25,000 of the cost of a wind or solar energy system.

B. Definitions

Charge Controller—an apparatus designed to control the state of charge of a bank of batteries.

Grid-Connected, Net Metering System—a wind or solar electric system interconnected with the utility grid in which the customer only pays the utility for the net energy used from the utility minus the energy fed into the grid by the customer. All interconnections must be in accordance with the capacity, safety and performance interconnection standards adopted as part of the Louisiana Public Service Commission's, the New Orleans City Council's, or other Louisiana utility regulatory entities, as appropriate, established Net Metering rules and procedures.

Inverter—an apparatus designed to convert direct current (DC) electrical current to alternating current (AC) electrical energy. Modern inverters also perform a variety of safety and power conditioning functions that allow them to safely interconnect with the electrical grid.

Photovoltaic Panel—a panel consisting of a collection of solar cells capable of producing direct current (DC) electrical energy when exposed to sunlight.

Residence—a single family dwelling, one dwelling unit of a multi-family, owner occupied complex, or one residential dwelling unit of a rental apartment complex. To be considered a residence, the physical properties of the space must provide the basic elements of a home, including appropriate and customary appliances and facilities and the occupant must use the facilities as a home with the intent to remain for a period exceeding 30 days. All eligible residences must be located in Louisiana.

Residential Rental Apartment Complex—a multi-family dwelling composed of multiple units in which the physical properties of each separate unit provides the basic elements of a home, including appropriate and customary appliances and facilities. To be considered a residential rental apartment complex, the taxpayer occupant or occupant(s) of the unit(s) must use the facilities as a home with the intent to remain for a period exceeding 30 days. All eligible residential rental apartment complexes must be located in Louisiana.

Solar Electric System—a system consisting of photovoltaic panels with the primary purpose of converting sunlight to electrical energy and all equipment and apparatus necessary to connect, store and process the electrical energy for connection to and use by an electrical load. Multiple system components working in tandem to connect, store and process the electrical energy needs for each residence or dwelling unit in a residential rental apartment complex shall constitute a single system for purposes of the tax credit.

Solar Thermal System—a system consisting of a solar energy collector with the primary purpose of converting sunlight to thermal energy and all devices and apparatus necessary to transfer and store the collected thermal energy for the purposes of heating water, space heating, or space cooling. Multiple system components working in tandem to connect, store and process the electrical energy needs for each residence or dwelling unit in a residential rental apartment complex shall constitute a single system for purposes of the tax credit.

Supplemental Heating Equipment—a device or apparatus installed in a solar thermal system that utilizes energy sources other than wind or sunlight to add heat to the system, with the exception of factory installed auxiliary heat strips that are an integral component of a specifically engineered solar hot water storage tank.

Wind Energy System—a system of apparatus and equipment with the primary purpose of intercepting and converting wind energy into mechanical or electrical energy and transferring this form of energy by a separate apparatus to the point of use or storage. Multiple system components working in tandem to connect, store and process the electrical energy needs for each residence or dwelling unit in a residential rental apartment complex shall constitute a single system for purposes of the tax credit.

C. Eligibility for Wind and/or Solar Energy Systems Tax Credits

1. Regardless of the number of system components installed on each qualifying residence or residential apartment complex, such components shall constitute a single system for each residence or dwelling unit in a residential rental apartment complex for purposes of the tax credit.

2. All wind or solar energy systems must be installed in the immediate vicinity of the residence or apartment project claiming the credit such that the electrical, mechanical or thermal energy is delivered directly to the residence or apartment project.

3. In order to claim a tax credit(s) for a wind energy system, solar electric energy system, or solar thermal energy system, the components for each system must be purchased and installed at the same time as a system.

4. For a taxpayer other than the owner of the residence or residential rental apartment project to claim a tax credit for a wind energy system, solar electric energy system, or solar thermal energy system, the taxpayer must provide the department with a copy of the contract in which the owner of the residence has clearly and unambiguously stated that he is not entitled to and will not claim the tax credit. Absent such a contract, the owner of the residence or residential rental apartment project is the only taxpayer eligible to claim the credit and the installer or developer shall have no right to the credit.

D. Claiming the Wind and Solar Energy Systems Tax Credit

1. The credit for the purchase and installation of a wind energy system or solar energy system by a taxpayer at his residence shall be claimed by the taxpayer on his Louisiana individual income tax return.

2. The credit for the purchase and installation of a wind energy system or solar energy system by the owner of a residential rental apartment project shall be claimed by the owner on his Louisiana individual, corporate or fiduciary income tax return.

3. The credit for the purchase and installation of a wind energy system or solar energy system by a taxpayer who purchases and installs such a system in a residence or a residential rental apartment project of which he is not the owner shall be claimed by the taxpayer on his Louisiana individual, corporate or fiduciary income tax return.

E. Wind and Solar Energy Systems Eligible for the Tax Credit

1. The credit provided by R.S. 47:6030 is only allowed for complete and functioning wind energy systems or solar energy systems. Local and state sales and use taxes are an eligible system cost. Any equipment added at a later date cannot use existing system components and has to have every element of a complete system in order to qualify for the credit.

a. Exceptions to General Rule Allowing Credit Only for Complete Systems

i. Exception in the Case of a Multi-Family Residence

(a). In order to be eligible to receive the credit, the owner of a single unit in a multi-family residence project must have an undivided interest in the wind or solar energy system that is being installed.

(b). If a component of a wind or solar energy system is shared, documentation must be supplied dividing up the costs of the component between all those eligible for the credit.

(c). Subsequent purchasers of units in the multi-family residence not in possession of an undivided interest at the time of installation, will not be eligible for the credit.

2. Wind Energy Systems. Eligible wind energy systems under the tax credit include systems designed to produce electrical energy and systems designed to produce mechanical energy through blades, sails, or turbines and may include the following.

System Type	Eligible System Components
DC Wind Electric Generation Systems	DC output wind turbine, controllers, towers & supports, charge controllers, inverters, batteries, battery boxes, DC & AC disconnects, junction boxes, monitors, display meters, lightning and ground fault protection, and wiring and related electrical devices and supplies from generator to residence or electrical load
AC Wind Electric Generation Systems	AC output wind turbine, controllers, towers & supports, charge controllers, power conditioners/grid interconnection devices, batteries, battery boxes, AC disconnects, junction boxes, monitors, display meters, lightning and ground fault protection, and wiring and related electrical devices and supplies from generator to residence or electrical load
Mechanical Wind Systems	mechanical output wind turbine, towers & supports, mechanical interconnection between turbine and mechanical load

3. Solar Electric Systems. Eligible solar electric systems under the tax credit include grid-connected net metering systems, grid-connected net metering systems with battery backup, stand alone alternating current (AC) systems and stand alone direct current (DC) systems, designed to produce electrical energy and may include the following.

System Type	Eligible System Components
Grid-Connected, Net Metering Solar Electric Systems	photovoltaic panels, mounting systems, inverters, AC & DC disconnects, lightning and ground fault protection, junction boxes, remote metering display devices and related electrical wiring materials from the photovoltaic panels to point of interconnection with the residence or electrical load

System Type	Eligible System Components
Grid-Connected, Net Metering Solar Electric Systems with Battery Backup	photovoltaic panels, mounting systems, inverters, charge controllers, batteries, battery cases, AC & DC disconnects, lightning and ground fault protection, junction boxes, remote metering display devices and related electrical wiring materials from the photovoltaic panels to point of interconnection with the residence or electrical load
Stand Alone Solar Electric AC Systems	photovoltaic panels, mounting systems, inverters, charge controllers, batteries, battery cases, AC & DC disconnects, lightning and ground fault protection, junction boxes, remote metering display devices and related electrical wiring materials from the photovoltaic panels to point of interconnection with the residence or electrical load
Stand Alone Solar Electric DC Systems	photovoltaic panels, mounting systems, charge controllers, batteries, battery cases, DC disconnects, lightning and ground fault protection, junction boxes, remote metering display devices and related electrical wiring materials from the photovoltaic panels to point of interconnection with the residence or electrical load

4. Solar Thermal Systemsl Solar thermal systems eligible under the tax credit include systems designed to produce domestic hot water, systems designed to produce thermal energy for use in heating and cooling systems and may include the following.

System Type	Eligible System Components
Domestic Solar Hot Water Systems	solar thermal collectors, mounting systems, solar hot water storage tanks, pumps, heat exchangers, drain back tanks, expansion tanks, controllers, sensors, valves, freeze protection devices, air elimination devices, photovoltaic panels for PV systems, piping and other related materials from the solar thermal collectors to the solar hot water storage tanks
Heating and Cooling Thermal Energy Systems	solar thermal collectors, mounting systems, solar hot water storage tanks, pumps, heat exchangers, drain back tanks, expansion tanks, controllers, sensors, valves, freeze protection devices, air elimination devices, photovoltaic panels for PV systems, piping and other related materials from the solar thermal collectors to the solar hot water storage tanks

5. Solar energy systems not installed on the rooftop of the residence or multifamily apartment project but installed on the qualifying property shall constitute a free standing ground mounted system. Ground mounted solar energy systems include but are not limited to single pole mounted structures, multiple pole mounted structures utilizing a foundation if necessary. Additional walls, interior finishes, foundations, roofing structures not directly related to the solar energy system, or any other addition not directly related to the solar energy structure are not eligible system costs. Ground mounted systems must be more than 8' feet in height at its lowest point if titled unless specific building codes and/or flood plain restrictions apply. Each qualifying free standing ground mounted system must be separately itemized from any and all other energy systems included in a taxpayer's submitted Form R-1086.

6. All wind and solar energy systems for which a tax credit is claimed shall include an operations and maintenance manual containing a working diagram of the system, explanations of the operations and functions of the component parts of the system and general maintenance procedures.

7. All photovoltaic panels, wind turbines, inverters and other electrical apparatus claiming the tax credit must be UL listed and installed in compliance with manufacturer specifications and all applicable building and electrical codes.

8. All photovoltaic systems installed at a tilt angle greater than 5 degrees shall have an azimuth greater than 80 degrees E and no more than 280 degrees W. North facing solar panels generally do not conform to industry best practices unless criteria above is satisfied.

9. All solar thermal apparatus claiming the tax credit must be certified by the Solar Rating and Certification Corporation (SRCC) and installed in compliance with manufacturer specifications and all applicable building and plumbing codes.

10. Applicants applying for the tax credit on any system(s) must provide proof of purchase to the Louisiana Department of Revenue detailing the following as applicable to your particular solar or wind energy system installation:

a. type of system applying for the tax credit;

b. output capacity of the system:

i. solar electric systems—total nameplate listed kW of all installed panels;

ii. solar thermal systems—listed SRCC annual BTU or equivalent kWh output;

iii. wind electric systems—total rated kW of all alternators and generators;

iv. wind mechanical systems—shaft horsepower as rated by manufacturer, licensed contractor or licensed professional engineer;

c. physical address where the system is installed in the state;

d. total cost of the system as applied towards the tax credit separated in an itemized list by:

i. equipment costs;

ii. installation costs;

iii. taxes;

e. make, model, and serial number of generators, alternators, turbines, photovoltaic panels, inverters, and solar thermal collectors applied for in the tax credit;

f. name and Louisiana contractor's license number of installer;

g. if applicable, copy of the modeled array output report using the PV Watts Solar System Performance Calculator developed by the National Renewable Energy Laboratory and available at the website www.nrel.gov/rredc/pvwatts. The analysis must be performed using the default PV Watts de-rate factor;

h. copy of a solar site shading analysis conducted on the installation site using a recognized industry site assessment tool such as a Solar Pathfinder or Solmetric demonstrating the suitability of the site for installation of a solar energy system;

i. conveyance certificate, deed or other legal document which evidences the owner of the residence or residential rental apartment complex;

j. when a system is installed by a third party owner, a complete and signed fourth page of Form R-1086.

F. Eligible Costs

1. Eligible Costs. Eligible costs that can be included under the tax credit are reasonable and prudent costs for equipment and installation of the wind and solar energy systems defined in Subsection B and described in Subsection E above.

a. All installations must be performed by a contractor duly licensed by and in good standing with the Louisiana Contractors Licensing Board with a classification of solar energy equipment and a certificate of training in the design and installation of solar energy systems from an industry recognized training entity, or a Louisiana technical college, or the owner of the residence.

2. Ineligible Costs. Labor costs for individuals performing their own installations are not eligible for inclusion under the tax credit. For purposes of this Paragraph, "individuals" shall mean natural persons as defined in Civil Code Article 24. For all other taxpayers, labor costs, including, but not limited to tree trimming and tree removal are not eligible under the tax credit. Supplemental heating and cooling (HVAC) equipment costs used with solar collectors are not eligible for inclusion under the tax credit. Other items ineligible for wind and/or solar energy systems tax credits include, but are not limited to the following: stand alone solar powered attic fans or ventilation systems, solar powered lights, solar powered air conditioning or heating units, solar day lighting apparatuses, solar powered pool pumps, solar pool heating systems, and all other stand-alone wind or solar device(s).

3. Whenever, in return for the purchase price or as an inducement to make a purchase, marketing rebates or incentives are offered, the eligible cost shall be reduced by the fair market value of the marketing rebate or incentive received. Such marketing rebates or incentives include, but are not limited to, cash rebates, prizes, gift certificates, trips, energy efficiency improvements not directed related to wind or solar energy installation, including, but not limited to spray foam insulation, radiant barrier, window sealing and/or caulking, heating and air conditioning improvements, blower door testing, thermostat upgrades which are not an integral part of the solar energy monitoring system, domestic hot system upgrades not related to solar hot water system insulation, or any other thing of value given by the installer or manufacturer to the customer as an inducement to purchase an eligible wind or solar energy system.

4. Only one wind or solar energy systems tax credit is available for each eligible system. Once a wind or solar energy systems tax credit is claimed by a taxpayer for a particular system, that same system is not eligible for any other tax credit pursuant to this Section. If the residential property or system is sold, the taxpayer who claimed the tax credit must disclose his use of the tax credit to the purchaser.

G. Other Tax Benefits Disallowed

1. A taxpayer shall not receive any other state tax credit, exemption, exclusion, deduction, or any other tax benefit for wind and solar property for which the taxpayer has received a wind energy system, solar electric energy system, or solar thermal energy system credit under R.S. 47:6030.

a. Taxpayers claiming a wind energy system, solar electric energy system, or solar thermal energy system credit may not claim a state depreciation deduction for capitalized system costs.

2. Exception. The credit may be used in addition to any federal tax credits earned for the same system.

AUTHORITY NOTE: Promulgated in accordance with R.S. 47:6030 and R.S. 47:1511.

HISTORICAL NOTE: Promulgated by the Department of Revenue, LR 34:2206 (October 2008), amended LR 36:2048 (September 2010), amended by the Department of Revenue, Policy Services Division, LR 37:3532 (December 2011), LR 38:

Family Impact Statement

The proposed amendment of LAC 61:I.1907, regarding income tax credits for wind or solar energy systems, should not have any known or foreseeable impact on any family as defined by R.S. 49:972(D) or on family formation, stability and autonomy. Specifically, the implementation of this proposed Rule will have no known or foreseeable effect on:

1. the stability of the family;
2. the authority and rights of parents regarding the education and supervision of their children;
3. the functioning of the family;
4. family earnings and family budget;
5. the behavior and personal responsibility of children;
6. the ability of the family or a local government to perform this function.

Public Comments

Any interested person may submit written data, views, arguments or comments regarding this proposed rule to Brad Blanchard, Attorney, Policy Services Division, Office of Legal Affairs by mail to P.O. Box 44098, Baton Rouge, LA 70804-4098. All comments must be received no later than 4:00 p.m., Wednesday, September 26, 2012. A public hearing will be held on Thursday, September 27, 2012, at 10:30 a.m. in the Calcasieu Room, on the second floor of the LaSalle Building, 617 North Third Street, Baton Rouge, Louisiana.

Jane Smith
Acting Secretary

FISCAL AND ECONOMIC IMPACT STATEMENT FOR ADMINISTRATIVE RULES
RULE TITLE: Income Tax Credits for Wind or Solar Energy Systems

I. ESTIMATED IMPLEMENTATION COSTS (SAVINGS) TO STATE OR LOCAL GOVERNMENT UNITS (Summary)

The proposed amendment to this Rule clarifies and restricts eligibility requirements for the refundable wind and solar energy systems income tax credits. Currently, the maximum credit of $12,500 (or half the cost of the solar or wind system and installation costs up to $25,000) is allowed per system. The proposed amendment limits the credit to one ($12,500) per residence or dwelling unit (apartment) where the current credit is limited to one per system. The credit will no longer be applicable to multiple systems working in tandem for one residence or dwelling. The proposed amendment also disallows certain costs in calculating the credit including certain capitalized expenditures, solar pool heating, certain housing surrounding non-rooftop systems, labor costs including but not limited to tree trimming or removal, cooling HVAC systems, certain attic fans or ventilation systems, solar powered lights, air-conditioning/heating units, day lighting apparatuses, pool

pumps and all other stand-alone wind or solar devices. Under the proposed amendment, energy efficiency improvements or any other thing of value offered as a marketing rebate or incentive by the installer or manufacturer must be deducted from the eligible cost. The proposed amendment also stipulates the industry best practices that must be followed for the system to be eligible for the credit. Finally, depreciation is no longer included as an eligible cost but may be claimed as an income tax deduction on systems that receive the wind and solar credit.

The adoption of this amendment should not result in any implementation costs or savings to state or local governmental units.

II. ESTIMATED EFFECT ON REVENUE COLLECTIONS OF STATE OR LOCAL GOVERNMENTAL UNITS (Summary)

The amounts paid in wind and solar tax credits have grown substantially since its inception in 2008. During the last five fiscal years, the Department of Revenue (LDR) issued payments of approximately $1.5 million in FY 2008-2009, $8.3 million in FY 2009-1010, $13 million in FY 2010-2011, and $22 million in FY 2011-2012. The limiting criteria included in the rule will effectively adjust revenue to the level apparently intended by the act. The impact is expected to be the result of limiting the credit to one system per dwelling and restricting the eligible costs. According to LDR, had the proposed amendment been in place during tax year 2011, about 40 percent of the credits paid would not have qualified. Assuming future growth in payments under the current rule of 50 percent per year given the expectation of additional qualifying rental systems, it is estimated that the impact on refundable credits due to the proposed amendment allowing fewer credits will be around $13.2 million in FY 13, $19.8 million in FY 14 and $29.7 million in FY 15. There may be a slight offset to the revenue increase since those systems that are depreciated would now be eligible for the income tax depreciation deduction under the proposed amendment.

Since this Rule is concerned with a state income tax credit, the amendment should have no impact on the revenue collections of local governmental units.

III. ESTIMATED COSTS AND/OR ECONOMIC BENEFITS TO DIRECTLY AFFECTED PERSONS OR NONGOVERNMENTAL GROUPS (Summary)

Some manufacturers, wholesalers, retailers and installers of wind and solar equipment may experience a lower level of sales, consistent with that apparently envisioned with the original act, due to a smaller amount of credit available as estimated in Section II. The proposed amendment states that those applying for the credit must supply an itemized list of the total cost of the system and must attach legal documentation of ownership. For a third party installation, a signed fourth page of Form R-1086 must be attached. Also some taxpayers who claim the wind or solar income tax credit may receive a smaller tax credit.

IV. ESTIMATED EFFECT ON COMPETITION AND EMPLOYMENT (Summary)

If fewer wind and solar systems are installed as a result of these measures, then the economic signals generated by the expanded portions of the credits would be changed, thereby potentially re-allocating resources to the other sectors of the economy.

Jane H. Smith
Secretary
1208#131

Gregory V. Albrecht
Chief Economist
Legislative Fiscal Office

NOTICE OF INTENT

Department of Wildlife and Fisheries
Wildlife and Fisheries Commission

Internet Purchase of Commercial Licenses and Permits
(LAC 76:VII.403, 413 and 415)

The Wildlife and Fisheries Commission does hereby give notice of its intent to promulgate rules and regulations relative to internet application and purchase of licenses associated with the commercial fishing industry. Authority to establish such rules and regulations is vested in the Wildlife and Fisheries Commission by R.S. 56:301.9.

Title 76
WILDLIFE AND FISHERIES
PART VII. Fish and other Aquatic Life
Chapter 4. License and License Fees

§403. Traversing Permit

A. The Department of Wildlife and Fisheries is authorized to issue a traversing permit upon application to its commercial license section at the Baton Rouge office for a fee of $250 for each permit. Application for permits must be made in person or as provided by Section 415 of this Part.

B. - H.9. …

AUTHORITY NOTE: Promulgated in accordance with R.S. 56:6(25)(a), R.S. 56:305.B, and R.S. 56:320.2.E.

HISTORICAL NOTE: Promulgated by the Department of Wildlife and Fisheries, Wildlife and Fisheries Commission, LR 22:240 (March 1996), amended LR 26:2333 (October 2000), LR 38:

§413. Methods of Payment for Commercial Licenses and Oyster Tags

A. Commercial licenses and oyster tags may be purchased using the following forms of payment:

1. cash;
2. money order;
3. cashier's check;
4. business checks certified by the issuing bank; and
5. credit cards (MasterCard, American Express, or Discover only).

B. Payment by credit card will be allowed only by the card holder at the Baton Rouge licensing location with the credit card present at the time of purchase or as provided by Section 415 of this Part.

C. No other forms of payment will be accepted.

AUTHORITY NOTE: Promulgated in accordance with R.S. 56:642(C).

HISTORICAL NOTE: Promulgated by the Department of Wildlife and Fisheries, Wildlife and Fisheries Commission, LR 37:1622 (June 2011), amended LR 38:

§415. Application and Payment for Eligible Commercial Licenses and Permits via the Internet

A. This Section allows certain persons to apply and pay for eligible commercial licenses or permits via the internet.

B. Application and payment of eligible commercial fishing licenses and permits may be made only in the name of the person who held that same license(s) or permit(s) for

the immediately preceding license or permit year No changes to information contained on the previous license or permit will be allowed when applying via internet.

1. Eligible commercial licenses and permits available for application and payment under this Section are limited to the following:

a. Commercial Fisherman License;
b. Fresh Products License;
c. Oyster Harvester License;
d. All Vessel Licenses;
e. All Commercial Fishing Gear Licenses and related feesl;
f. Seafood Retail Dealer License;
g. Seafood Wholesale/Retail Dealer License;
h. Seafood Transport License;
i. Wholesale Out of State Crab Shipping License;
j. Charter Guide License;
k. Charter Mothership License;
l. Charter Skiff License;
m. All Commercial Fishing Permits;
n. Domestic Aquatic Organism License, and
o. Apprentice License.

C. Payment may be made by the following methods:

1. VISA;
2. MasterCard;
3. Discover;
4. American Express; and
5. electronic check.

D. In addition to the cost of each license or permit, a use fee of $2 per license or permit and a handling fee of three percent per transaction will be charged for use of the internet application and payment system.

AUTHORITY NOTE: Promulgated in accordance with R.S.56:642(C)

HISTORICAL NOTE: Promulgated by the Department of Wildlife and Fisheries, Wildlife and Fisheries Commission, LR 38:

Family Impact Statement

In accordance with Act 1183 of the 1999 regular session of the Louisiana Legislature, the Department of Wildlife and Fisheries/Wildlife and Fisheries Commission hereby issues its Family Impact Statement in connection with the preceding Notice of Intent: This Notice of Intent will have no impact on the six criteria set out at R.S. 49:972(B).

Public Comments

Interested persons may submit written comments on the proposed Rule to Janis Landry, Licensing Manager, P.O. Box 98000, Baton Rouge, LA 70898 no later than 4:30 p.m., September 6, 2012.

The secretary of the Department of Wildlife and Fisheries is authorized to take any and all necessary steps on behalf of the commission to promulgate and effectuate this Notice of Intent and the final Rule, including, but not limited to, the filing of the Fiscal and Economic Impact Statements, the filing of the Notice of Intent and final Rule and the preparation of reports and correspondence to other agencies of government.

Ann L. Taylor
Chairman

FISCAL AND ECONOMIC IMPACT STATEMENT FOR ADMINISTRATIVE RULES
RULE TITLE: Internet Purchase of Commercial Licenses and Permits

I. ESTIMATED IMPLEMENTATION COSTS (SAVINGS) TO STATE OR LOCAL GOVERNMENT UNITS (Summary)

Implementation of the proposed rule change will result in an increase in expenditures in FY 12-13 in the amount of $34,297. These expenditures will include one-time costs in the amount of $28,800 for professional services costs to develop and launch a system to take applications and receive payment for commercial fishing licenses and permits via the Internet. In addition, annual recurring costs associated with the proposed rule change will be $5,497, which is the estimated amount the department will pay a contractor a transaction fee of $0.72 per commercial license or permit applied for via the Internet. This estimate is extrapolated from the percentage of revenue generated from the issuance of recreational hunting and fishing privileges that comes from privileges issued via the Internet. In FY 11-12, 10.71 percent of revenue generated from the sale of recreational hunting and fishing privileges was from privileges purchased via the Internet. It is estimated that a similar percentage of commercial fishing licenses and permits will be applied and paid for via the Internet. In FY 11-12, 71,284 commercial fishing licenses or permits were issued by the Department of Wildlife and Fisheries. Therefore, it is estimated that 7,635 commercial licenses and permits will be applied and paid for via the Internet each year.

The proposed rule change establishes the requirements for applying and paying for commercial fishing licenses and permits via the Internet. Currently, Louisiana commercial fishing licenses and permits cannot be applied for or purchased via the Internet. Act 61 of the 2012 regular session of the Louisiana Legislature established that the Department of Wildlife and Fisheries may promulgate rules and regulations authorizing application and payment for commercial fishing licenses and permits via the Internet. The act further stipulates that the Department of Wildlife and Fisheries may impose a fee of $2.00 per commercial fishing license or permit applied for via the Internet.

The proposed rule change will have no impact on local governmental units.

II. ESTIMATED EFFECT ON REVENUE COLLECTIONS OF STATE OR LOCAL GOVERNMENTAL UNITS (Summary)

The proposed rule change is anticipated to increase Conservation Fund revenues by $15,270 per year. The Department of Wildlife and Fisheries will assess a fee of $2.00 per commercial fishing license or permit applied and paid for via the internet.

The proposed rule change is anticipated to have no effect on revenue collections of local governmental units.

III. ESTIMATED COSTS AND/OR ECONOMIC BENEFITS TO DIRECTLY AFFECTED PERSONS OR NONGOVERNMENTAL GROUPS (Summary)

The proposed rule change will affect certain persons who apply for and pay for the following commercial fishing licenses and permits via the Internet; Traversing Permit, Commercial Fisherman License, Fresh Products License, Oyster Harvester License, all vessel licenses, all commercial fishing gear licenses and related fees, Seafood Retail Dealer License, Seafood Wholesale/Retail Dealer License, Seafood Transport License, Wholesale Out of State Crab Shipping License,

Charter Guide License, Charter Mothership License, Charter Skiff License, all commercial fishing permits, Domestic Aquatic Organism License, and Apprentice License. These individuals will have the added convenience of using the Internet to purchase licenses.

The proposed rule change also specifies that VISA, Mastercard, Discover, American Express, and electronic check shall be the types of payment accepted for commercial fishing licenses and permits applied for via the internet. In the proposed rule change it is specified that, in addition to the cost of each license or permit, a use fee of $2.00 per license or permit and a handling fee of three percent per transaction will be charged for use of the internet application and payment system.

The total additional costs to be incurred by the license and permit applicants are estimated to be $27,145 annually. This cost value is derived by summing the estimated annual costs for use fees ($15,270) and handling fees ($11,875) for permits and licenses applied and paid for via the internet. The annual total use fees value is based on the number of commercial fishing licenses and permits estimated to be applied and paid for via the internet each year (7,635) multiplied by the per permit or license use fee ($2.00). The handling fees value is derived by multiplying the total revenue generated in FY 11-12 from the sale of commercial fishing licenses or permits ($3,695,815) by the estimated percentage of commercial fishing licenses or permits that will be applied and paid for via the internet (10.71 percent) and by the three percent handling fee. Handling fees will be paid directly to the license contractor and not to the Department of Wildlife and Fisheries.

IV. ESTIMATED EFFECT ON COMPETITION AND EMPLOYMENT (Summary)

The proposed rule change is anticipated to have no effect on competition and employment in the public and private sectors.

Lois Azzarello	Evan Brasseaux
Undersecretary	Staff Director
1208#053	Legislative Fiscal Office

NOTICE OF INTENT

Workforce Commission
Office of Workers' Compensation

Form LWC-WC-1009 (LAC 40:I:2012, 2024, 2116, 2136, 2214, 2228, 2314, and 2328)

Notice is hereby given, in accordance with R.S. 49:950 et seq., that the Louisiana Workforce Commission, Office of Workers' Compensation, pursuant to the authority vested in the director of the Office of Workers' Compensation by R.S. 23:1310.1 and in accordance with applicable provisions of the administrative provisions Act, proposes to amend LAC 40:I:2012, 2024, 2116, 2136, 2214, 2228, 2314, 2328. The amendments include:

Title 40
LABOR AND EMPLOYMENT
Part I. Workers' Compensation Administration
Subpart 2. Medical Guidelines

Chapter 20. Spine Medical Treatment Guidelines

Subchapter A. Cervical Spine Injury

Editor's Note: Form LWC-WC 1009. Disputed Claim for Medical Treatment has been moved to §2328 of this Part.

§2012. LWC-WC 1009. Disputed Claim for Medical Treatment

Repealed.

AUTHORITY NOTE: Promulgated in accordance with R.S. 23:1203.1.

HISTORICAL NOTE: Promulgated by the Louisiana Workforce Commission, Office of Workers Compensation Administration, LR 37:1654 (June 2011), repealed LR 38:

Subchapter B. Low Back Pain

Editor's Note: Form LWC-WC 1009. Disputed Claim for Medical Treatment has been moved to §2328 of this Part.

§2024. LWC-WC 1009. Disputed Claim for Medical Treatment

Repealed.

AUTHORITY NOTE: Promulgated in accordance with R.S. 23:1203.1.

HISTORICAL NOTE: Promulgated by the Louisiana Workforce Commission, Office of Workers Compensation Administration, LR 37:1681 (June 2011), repealed LR 38:

Chapter 21. Pain Medical Treatment Guidelines

Subchapter A. Chronic Pain Disorder Medical Treatment Guidelines

Editor's Note: Form LWC-WC 1009. Disputed Claim for Medical Treatment has been moved to §2328 of this Part.

§2116. LWC-WC 1009. Disputed Claim for Medical Treatment

Repealed.

AUTHORITY NOTE: Promulgated in accordance with R.S. 23:1203.1.

HISTORICAL NOTE: Promulgated by the Louisiana Workforce Commission, Office of Workers Compensation Administration, LR 37:1715 (June 2011), repealed LR 38:

Subchapter B. Complex Regional Pain Syndrome

Editor's Note: Form LWC-WC 1009. Disputed Claim for Medical Treatment has been moved to §2328 of this Part.

§2136. LWC-WC 1009. Disputed Claim for Medical Treatment

Repealed.

AUTHORITY NOTE: Promulgated in accordance with R.S. 23:1203.1.

HISTORICAL NOTE: Promulgated by the Louisiana Workforce Commission, Office of Workers Compensation Administration, LR 37:1736 (June 2011), repealed LR 38:

Chapter 22. Neurological and Neuromuscular Disorder Medical Treatment Guidelines

Subchapter A. Carpal Tunnel Syndrome (CTS) Medical Treatment Guidelines

Editor's Note: Form LWC-WC 1009. Disputed Claim for Medical Treatment has been moved to §2328 of this Part.

§2214. LWC-WC 1009. Disputed Claim for Medical Treatment

Repealed.

AUTHORITY NOTE: Promulgated in accordance with R.S. 23:1203.1.

HISTORICAL NOTE: Promulgated by the Louisiana Workforce Commission, Office of Workers Compensation Administration, LR 37:1749 (June 2011), repealed LR 38:

Subchapter B. Thoracic Outlet Syndrome

Editor's Note: Form LWC-WC 1009. Disputed Claim for Medical Treatment has been moved to §2328 of this Part.

§2228. LWC-WC 1009 Disputed Claim for Medical Treatment.

Repealed.

AUTHORITY NOTE: Promulgated in accordance with R.S. 23:1203.1.

HISTORICAL NOTE: Promulgated by the Louisiana Workforce Commission, Office of Workers Compensation Administration, LR 37:1765 (June 2011), repealed LR 38:

Chapter 23. Upper and Lower Extremities Medical Treatment Guidelines

Subchapter A. Lower Extremities

Editor's Note: Form LWC-WC 1009. Disputed Claim for Medical Treatment has been moved to §2328 of this Part.

§2314. LWC-WC 1009. Disputed Claim for Medical Treatment

Repealed.

AUTHORITY NOTE: Promulgated in accordance with R.S. 23:1203.1.

HISTORICAL NOTE: Promulgated by the Louisiana Workforce Commission, Office of Workers Compensation Administration, LR 37:1820 (June 2011), repealed LR 38:

Subchapter B. Shoulder Injury Medical Treatment Guidelines

Editor's Note: Form LWC-WC 1009. Disputed Claim for Medical Treatment has been moved to §2328 of this Part.

§2328. LWC-WC 1009. Disputed Claim for Medical Treatment

Repealed.

AUTHORITY NOTE: Promulgated in accordance with R.S. 23:1203.1.

HISTORICAL NOTE: Promulgated by the Louisiana Workforce Commission, Office of Workers Compensation Administration, LR 37:1862 (June 2011), repealed LR 38:

§2328. LWC-WC 1009. Disputed Claim for Medical Treatment

E-Mail to: mgd1009@lwc.gov
Fax to: OWCA—Medical Services
ATTN: Medical Director
(225) 342-9836

1. Social Security No.__-__-__
2. Date of Injury/Illness __-__-__
3. Parts of Body Injury_____
4. Date of Birth __-__-__
5. Date of This Request __-__-__
6. Claim Number _____

DISPUTED CLAIM FOR MEDICAL TREATMENT

NOTE: THIS REQUEST WILL NOT BE HONORED UNLESS THERE ARE MEDICAL SERVICES IN DISPUTE AS PER R.S. 23:1203.1 J AND THE FOLLOWING HAS OCCURRED:

A. The insurer has issued a denial.
B. The insurer has issues an approval with modification.
C. The insurer's failure to act has resulted in a deemed denial.
D. The aggrieved party is seeking a variance from the medical treatment schedule

DISPUTES RELATING TO COMPENSABILITY AND/OR CAUSATION ARE NOT ADDRESSED BY THE MEDICAL DIRECTOR.

GENERAL INFORMATION
Claimant files this dispute with the Office of Workers' Compensation – Medical Services Director. This office must be notified immediately in writing of changes in address. An employee may be represented by an attorney, but it is not required.

7. This request is submitted by
___ Employee ____ Health Care Provider ___ Other _____

The following records/documents *MUST* be attached to this request. Failure to do so may result in the rejection of the request by the OWCA director:

A. Copies of all relevant information must be included with this request as per LAC 40:I.2715 J.
B. If applicable, a copy of the denial letter issued by the insurance carrier must be attached to this request.
C. A copy of this request with all supporting documentation must be mailed or emailed to all parties at their designated fax or email address.

EMPLOYEE
8. Name _____
Street or Box _____
City _____
State _____ Zip _____
Phone (____) _____

EMPLOYEE'S ATTORNEY
9. Name _____
Street or Box _____
City _____
State _____ Zip _____
Phone (____) _____
Fax (____) _____

EMPLOYER
10. Name _____
Street or Box _____
City _____
State _____ Zip _____
Phone (____) _____
Fax (____) _____

INSURER/ADMINISTRATOR
(circle one)
11. Name _____
Street or Box _____
City _____
State _____ Zip _____
Phone (____) _____
Fax (____) _____

TREATING/REQUESTING PHYSICIAN
12. Name _____
Street or Box _____
City _____
State _____ Zip _____
Phone (____) _____
Fax (____) _____

13. PLEASE PROVIDE A SUMMARY OF THE DETAILS REGARDING THE ISSUE AT DISPUTE:
_____
_____
_____
_____
_____
_____
_____
_____
_____
_____
_____
_____
_____
_____

You may attach a letter or petition with additional information with this disputed claim.

By signing below, you are certifying that this form along with all supporting documentation has been sent to the carrier/self-insured employer this date to their designated fax or email address.

The information given above is true and correct to the best of my knowledge and belief.

_____ _____
SIGNATURE OF REQUESTING PARTY DATE

_____
Printed Name of Requesting Party

LWC-WC 1009
11/2010

AUTHORITY NOTE: Promulgated in accordance with R.S. 23:1203.1.

HISTORICAL NOTE: Promulgated by the Louisiana Workforce Commission, Office of Workers Compensation Administration, LR 38:

Family Impact Statement

Implementation of this proposed Rule should not have any known or foreseeable impact on any family as defined by R.S. 49:972(D) or on any family formation, stability, and autonomy. This proposed Rule shall not have any impact on the six criteria set out in R.S. 49:972(D).

Small Business Statement

The impact of the proposed Rule on small business has been considered and it is estimated that the proposed action is not expected to have a significant adverse impact on small business as defined in the Regulatory Flexibility Act. The agency, consistent with health, safety, environmental and economic welfare factors has considered and, where possible, utilized regulatory methods in the drafting of the proposed Rule that will accomplish the objectives of applicable statutes while minimizing the adverse impact of the proposed Rule on small businesses.

Public Comments

The proposed amendments alter the existing LWC-WC-1009. The amendments further define the process and procedures to be followed by aggrieved parties in light of the implementation of the LAC 40:I:27 Section 2715 (UR Rules) which went into effect April 20, 2012.

Inquiries concerning the proposed amendments may be directed to: Director, Office of Workers' Compensation Administration, Louisiana Workforce Commission, P.O. Box 94040, Baton Rouge, LA 70804-9040.

Interested parties may submit data, views, arguments, information or comments on the proposed amendment in writing to the Louisiana Workforce Commission, Office of Workers' Compensation, P.O. Box 94040, Baton Rouge, Louisiana 70804-9040., Attention: Director, Office of Workers' Compensation Administration. Written comments must be submitted and received by the Department within 20 days from the publication of this notice. A request pursuant to R.S. 49:953(A)(2) for oral presentation, argument or public hearing must be made in writing and received by the Department within 20 days of the publication of this notice.

Public Hearing

In accordance with R.S. 49:968(H)(2), a public hearing will be held on Thursday, September 27,2012, 9:30 a.m. at the LWC Training Center, 2155 Fuqua St., Baton Rouge, LA 70802.

Curt Eysink
Executive Director

FISCAL AND ECONOMIC IMPACT STATEMENT FOR ADMINISTRATIVE RULES RULE TITLE: LWC-WC-1009

I. ESTIMATED IMPLEMENTATION COSTS (SAVINGS) TO STATE OR LOCAL GOVERNMENT UNITS (Summary)

The proposed amendments alter the existing form LWC-WC 1009, which is the form filed for disputed claims of medical treatment. The amendments further define the process and procedures to be followed by the parties in light of the implementation of the LAC 40:I:27 Section 2715 (Utilization Review Rules) which went into effect April 20, 2012. The proposed amendment makes the form consistent with procedures and guidelines already in place, including guidelines to determine when an appeal with a 1009 is appropriate, disallowing employers and insurers to file a 1009, clarifications of form 1009 attachments per statute, and the addition of a certification signature and print line for the requesting party to certify they have provided all information to the carrier/self-insured employer by fax/email.

The Office of Workers' Compensation (OWC) will not experience any additional expense due to the alteration of these forms. The proposed amendment to the existing form LWC-WC 1009 will be made available online and as such no re-printing of the forms will be necessary.

The Division of Administration indicates that the proposed rule will have no fiscal impact on the Office of Risk Management.

II. ESTIMATED EFFECT ON REVENUE COLLECTIONS OF STATE OR LOCAL GOVERNMENTAL UNITS (Summary)

The proposed form changes adhere to the new standard of care established by La. R.S. 23:1203.1 and LAC 40:I:27 Section 2715 and will allow the form to be consistent with current policy. The implementation of the amendments to the form LWC-WC 1009 will have no anticipated effect on revenue collections of state or local governmental units.

III. ESTIMATED COSTS AND/OR ECONOMIC BENEFITS TO DIRECTLY AFFECTED PERSONS OR NONGOVERNMENTAL GROUPS (Summary)

For all affected parties, the proposed amendments will make form LWC-WC-1009 consistent with the established process whereby medical disputes are resolved by a streamlined administrative process rather than the prior legal process. Medical providers, injured workers' or their representatives will be tasked with submitting the LWC-WC 1009 form to the medical services section of the OWC in order for the medical director to opine whether previously denied treatment is in accordance with the Medical Treatment Schedule (MTS). The standardized forms will update existing, self-generated forms and no additional costs or workload adjustments are anticipated. The proposed amendments will result in updates to forms that are and will continue to be made available online. The reporting burden is not anticipated to be significantly different than that currently imposed.

IV. ESTIMATED EFFECT ON COMPETITION AND EMPLOYMENT (Summary)

There is no anticipated direct effect on competition and employment.

Wes Hathaway
Director
1208#072

Gregory V. Albrecht
Chief Economist
Legislative Fiscal Office

Potpourri

POTPOURRI

Office of the Governor
Division of Administration
Office of Information Technology

OIT Bulletin Published

Pursuant to LAC 4:XV.501 et seq., the Office of Information Technology (OIT) has published the following bulletin in the period 08/01/2012 to 08/31/2012.

Bulletin Number	Topic	Date
ITB 12-01	PC and Printer IT Request and Budgeting Guidelines Revised	08/01/2012

This bulletin provides revised PC and printer IT request and budgeting guidelines referenced in the IT Std 6-01 Desktop Configuration. These guidelines are applicable during budget preparation, as well as for mid-year requests as of 8/1/2012.

OIT bulletins, standards, guidelines and policies are posted on the OIT web site at: http://www.doa.louisiana.gov/oit/index.htm.

To receive -email notifications when an OIT bulletin is published, register at: http://www.doa.louisiana.gov/oit/email_notifications.htm.

Ed Driesse
Chief Information Officer

1208#026

POTPOURRI

Department of Health and Hospitals
Office of Public Health
Nutrition Services Program

Special Supplemental Nutrition Program for Women, Infants and Children (WIC)

The Office of Public Health, in accordance with federal regulations at 7 CFR 246.4(a)(28)(b), gives notice that the annual Louisiana WIC State Plan is now available to the public for review and comment. Copies of the plan may be obtained by writing Denise Harris, WIC Director, Office of Public Health, 628 N. Fourth Street, Bin #4, Baton Rouge, LA 70821, by telephone at (225) 342-8064, or by e-mail at denise.harris@la.gov. Written comments regarding the plan should also be directed to Ms. Harris. Written comments concerning the WIC State Plan are due no later than 4:30 p.m., September 20, 2012, and should be submitted to Denise Harris, Office of Public Health, Nutrition Services Program 628 N. Fourth Street, Bin #4, Baton Rouge, LA 70821 or by fax to (225) 342-8312.

Bruce Greenstein
Secretary

1208#123

POTPOURRI

Department of Natural Resources
Office of Conservation

Orphaned Oilfield Sites

Office of Conservation records indicate that the oilfield sites listed in the table below have met the requirements as set forth by Section 91 of Act 404, R.S. 30:80 et seq., and as such are being declared orphaned oilfield sites.

Operator	Field	District	Well Name	Well Number	Serial Number
Ko-Ler-Sadler Oil Co	Caddo Pine Island	S	Muslow B	085	41025
Hopi	Wildcat-No La Shreveport Dist	S	William Hearn	001	154340
Unknown Operator	Willow Woods	L	Frank Ellender	001	990474
Celeron Oil And Gas Company	Wildcat-So La Houma Dist	L	T W Labarre	001	191131 (30)

James H. Welsh
Commissioner

1208#048

POTPOURRI

Department of Natural Resources
Office of Conservation
Environmental Division

Legal Notice—Docket No. ENV 2012-07

Notice is hereby given that the commissioner of conservation will conduct a hearing at 6:00 p.m., Thursday, September 27, 2012, at the Creole Community Center located at 184 East Creole Highway, Creole, LA.

At such hearing, the commissioner, or his designated representative, will hear testimony relative to the application of Titan, LLC, Sulphur, LA. The applicant requests approval from the Office of Conservation to construct and operate a commercial deep well injection waste disposal facility for disposal of exploration and production waste (E and P waste) fluids located in Township 14 South, Range 7 West, Section 33 in Cameron Parish.

The application is available for inspection by contacting Mr. Daryl Williams, Office of Conservation, Environmental Division, eighth floor of the LaSalle Office Building, 617 North Third Street, Baton Rouge, LA. Copies of the application will be available for review at the Cameron Parish Police Jury and the Cameron Parish Main Branch Library in Cameron, Louisiana no later than 30 days prior to the hearing date. Verbal information may be received by calling Mr. Williams at (225) 342-7286.

All interested persons will be afforded an opportunity to present data, views or arguments, orally or in writing, at said public hearing. Written comments which will not be presented at the hearing must be received no later than 4:30 p.m., Thursday, October 4, 2012, at the Baton Rouge office. Comments should be directed to:

Office of Conservation
Environmental Division
P.O. Box 94275
Baton Rouge, Louisiana 70804
Re: Docket No. ENV 2012-07
Commercial Facility Well Application
Cameron Parish

James H. Welsh
Commissioner

1208#073

POTPOURRI

Department of Natural Resources
Office of the Secretary
Fishermen's Gear Compensation Fund

Latitude/Longitude Coordinates

In accordance with the provisions of R.S. 56:700.1 et seq., notice is given that 2 claims in the amount of $9,478.00 were received for payment during the period July 1, 2012 - July 31, 2012.

There were 2 paid and 0 denied.

Latitude/longitude coordinates, in degree decimal minutes, of reported underwater obstructions are:

29 15.316	89 40.452	Plaquemines
29 38.033	89 32.690	Plaquemines

A list of claimants and amounts paid can be obtained from Gwendolyn Thomas, Administrator, Fishermen's Gear Compensation Fund, P.O. Box 44277, Baton Rouge, LA 70804 or call (225) 342-9388.

Scott A. Angelle
Secretary

1208#074

POTPOURRI

Workforce Commission
Office of Workers' Compensation

Average Weekly Wage Rate

Pursuant to Act 583 of the Regular Session of the 1975 Louisiana Legislature, this state's average weekly wage upon which the maximum workers' compensation weekly benefit amount will be based, effective September 1, 2012 has been determined by the Louisiana Workforce Commission to be $807.07.

	Average Weekly Wage	Maximum Comp	Minimum Comp
Sept. 1, 1999 - Aug. 31, 2000	512.47	384.00	102.00
Sept. 1, 2000 - Aug. 31, 2001	517.93	388.00	104.00
Sept. 1, 2001 - Aug. 31, 2002	530.43	398.00	106.00
Sept. 1, 2002 - Aug. 31, 2003	554.31	416.00	111.00
Sept. 1, 2003 - Aug. 31, 2004	572.53	429.00	114.00
Sept. 1, 2004 - Aug. 31, 2005	584.40	438.00	117.00
Sept. 1, 2005 - Aug. 31, 2006	605.46	454.00	121.00
Sept. 1, 2006 - Aug. 31, 2007	637.19	478.00	127.00
Sept. 1, 2007 - Aug. 31, 2008	696.00	522.00	139.00
Sept. 1, 2008 - Aug. 31, 2009	728.10	546.00	146.00
Sept. 1, 2009 - Aug. 31, 2010	768.83	577.00	154.00
Sept. 1, 2010 - Aug. 31, 2011	772.18	579.00	154.00
Sept. 1, 2011 - Aug. 31, 2012	789.00	592.00	158.00
Sept. 1, 2012 - Aug. 31, 2013	807.07	605.00	161.00

Actual wages are to be paid if the wages are less than the minimum.

Approved mileage rate as of July 1, 2012 is $0.51 per mile.

Wes Hataway
Director

1208#057

POTPOURRI

Workforce Commission
Office of Workers' Compensation

Weekly Compensation Benefits Limits

Pursuant to R.S. 23:1202 and based on the statewide average weekly wage as determined by the Louisiana Workforce Commission, the following limits shall apply to weekly compensation benefits for claimants injured during the period September 1, 2012-August 31, 2013.

Average Weekly Wage	Maximum Compensation	Minimum Compensation	Mileage Reimbursement
$807.07	$605.00	$161.00	*51 cents per mile

*Effective July 1, 2012 the mileage reimbursement is 51 cents per mile pursuant to R.S. 23:1203(D).

Wes Hataway
Director

1208#058

CUMULATIVE INDEX
(Volume 38, Number 8)

2012	
Pages	**Issue**
1-269	January
270-692	February
693-915	March
916-1147	April
1148-1343	May
1344-1473	June
1474-1879	July
1880-2301	August

EO—Executive Order
PPM—Policy and Procedure Memoranda
ER—Emergency Rule
R—Rule
N—Notice of Intent
CR—Committee Report
GR—Governor's Report
L—Legislation
P—Potpourri

ADMINISTRATIVE CODE UPDATE
Cumulative
January 2011-December 2011, 261
January 2012-March 2012, 1135
January 2012-July 2012, 1870

AGRICULTURE AND FORESTRY
Advisory Commission on Pesticides
Pesticide restrictions, 1295N
Restrictions on applications of certain pesticides, 1566R
Agriculture and Environmental Sciences
Pesticide restrictions, giant salvinia
Lake Bistineau, 693ER
Toledo Bend, 694ER
Quarantine listing for 2012, 1137P
Seed inspection fees, 1039N, 1557R
Animal Health, Board of
Chronic wasting disease, 158N, 961R
Commissioner, Office of the
Railroad crossings, 160N, 962R
Feed, Fertilizer and Agricultural Liming Commission
Feed, fertilizer, and agricultural liming, 1749N
Horticulture Commission
Landscape architect registration exam, 265P, 678P
Seed Commission
Seed inspection fees, 1039N, 1557R

AMITE RIVER BASIN DRAINAGE AND WATER CONSERVATION DISTRICT
Expropriation of property, 1383R

CHILDREN AND FAMILY SERVICES
(Formerly Department of Social Services)
Division of Programs
Block grant intended use report, 1139P
Child care assistance program (CCAP) reducing the income limit for eligibility, 1883ER
Progress and services report, 1138P
TANF caseload reduction, 678P
Economic Stability and Self-Sufficiency
Elderly and disabled resource limit increase, 4ER, 350R
KCSP grant reduction and termination of post-FITAP transitional services, 695ER, 838N, 1390R
TANF initiatives, 272ER, 1040N, 1558R
Verbal fair hearing withdrawals, 162N, 964R
Licensing Section
Child safety alarm, 436N, 1207R
Criminal record check, 166N
Sex offender prohibitions and state central registry disclosure, 272ER, 968R
Emergency preparedness and evacuation planning, 4ER, 981R
Foster care/substitute family care, 2003N
Juvenile detention facilities, 285ER, 1041N, 1148ER, 1558R, 1884ER
Service delivery model monitoring and review, 984R

CIVIL SERVICE
Administrative Law, Division of
Administrative law, 1756N
Ethics, Board of
Ethics training, third party, 439N, 1209R
Food and drink limit, 1297N, 1951R
Late filings, 437N, 1207R

ECONOMIC DEVELOPMENT
Louisiana Economic Development Corporation
Economic development award program (EDAP), Economic development loan program (EDLOP), and Economic development site readiness program (EDRED), 1488ER, 1760N
Secretary, Office of
Louisiana seed capital program (LSCP) and seed capital program for the state small business credit initiative (SSBCI), 734R, 986R
Research and development tax credit program, 350R
Small entrepreneurship certification program, 2012N
Small business loan and guaranty program (SBL and GP) and state small business credit initiative (SSBCI) program, 740R, 992R
The veteran initiative—certification, 2013N

ECONOMIC DEVELOPMENT (continued)
Business Development, Office of
Competitive projects payroll incentive program, 2006N
Corporate headquarters relocation program, 2007N
Corporate tax apportionment program, 2009N
Economic development award program (EDAP), Economic development loan program (EDLOP), and Economic development site readiness program (EDRED), 1488ER, 1760N
Quality jobs program, 1488ER, 2011N

EDUCATION
Elementary and Secondary Education, Board of
Advisory councils, 772R
Technical revisions and updates, 2066N
Bulletin 111—The Louisiana School, District, and State Accountability System, 443N, 839N, 1212R, 1391R, 1420N, 2014N
Bulletin 118—Statewide Assessment Standards and Practices, 33R, 747R
Administrative error, 1421N
Bulletin 119—Louisiana School Transportation Specifications and Procedures, 748R
Bulletin 126—Charter Schools, 184N, 1392R, 1583R
Virtual schools, 37R, 750R, 2027N
Bulletin 129—The Recovery School District, 352R
Parent petitions, 2031N
Return of schools to LEA, 841N, 1396R
Type 5 charter school, 1422N
Bulletin 130—Regulations for the Evaluation and Assessment of School Personnel, 445N, 1214R, 1424N, 2034N
Bulletin 132—Louisiana Course Choice Program, 2035N
Bulletin 133—Scholarship Programs, 2041N
Bulletin 741—Louisiana Handbook for School Administrators, 754R
Adult education programs, 844N, 1398R
Advanced placement and international baccalaureate, 1429N
Approval for alternative schools or programs, 1066N, 1583R
Assessment, 455N, 1223R
Carnegie credit for middle school students, 2046N
Certification of personnel, 456N, 1224R
College and career diploma and career diploma, 761R
Compulsory attendance, 188N, 845N, 1000R, 1399R
Connections process, 189N, 1000R, 2047N
Credit recovery, 2048N
Curriculum and instruction, 190N, 1001R, 1067N, 1584R
Distance education, 2048N
Educational leader, 39R
Foreign languages, 1430N
General career and technical education, 2049N
Physical education, 40R
Scheduling and student services, 457N, 1224R
School food service, 2051N
Sexual offenses affecting minors, 41R
Technology education, 847N, 1399R, 1431N
Textbooks, 1432N
Bulletin 741 (Nonpublic)—Louisiana Handbook for Nonpublic School Administrators, 769R, 855N, 1008R, 1404R
Health and safety rules, three-year-old programs, 458N, 1226R
Bulletin 746—Louisiana Standards for State Certification of School Personnel
Artist or talented certificate, 762R
Counselor K-12, 848N, 1400R
Criminal offenses, 762R
CTTIE-1 and CTTIE-2 certificates, 1433N
Educational leader, 42R
Practitioner (residency) program, 765R
Educational technology areas, 766R
Instructional coaching, 767R
Requirements to add early childhood, 43R
Requirements to add elementary, 44R
School nurse, 44R, 1434N
Social worker, 45R
Special education examiners, 768R
Standard teaching authorizations, 1297N, 1951R
Type C certificates, 2052N
Bulletin 921—Policy and Procedure Manual for the Louisiana Quality Education Support Fund 8(g), 2058N
Bulletin 1196—Louisiana Food and Nutrition Programs, Policies of Operation, 2065N
Bulletin 1706—Regulations for Implementation of the Children with Exceptionalities Act, 1435N
Expenditures, 850N, 1401R
Students with disabilities, 768R, 852N, 1006R, 1070N, 1225R, 1403R
Minimum foundation program, 854N, 1404R
Regents, Board of
Academic program standards, 461N, 1228R
Student Financial Assistance Commission
Student Financial Assistance, Office of
Scholarship/Grant Programs, 200N, 309ER, 1884ER
Academic year, 2074N
Award amount, 354R
Definitions, 924ER
Early start program, statewide general education course articulation matrix and approved LAICU institutions, 1229R
Establishing eligibility, 354R
GO grant, 924ER
J.R. Justice awards, 462N, 1585R
Nontraditional students, 1071N, 1953R
Summer sessions, 1072N, 1953R
Tuition Trust Authority
Student Financial Assistance, Office of
START savings program, 925ER, 1073N, 1890ER
Applicable definitions, 2080N
Interest Rates for 2010 and 2011, 1954R

ENVIRONMENTAL QUALITY

Environmental Compliance, Office of

Underground Storage Tank and Remediation Division

Application of groundwater protection fees at various sites in the state, 1850P

Environmental Services, Office of

Air Permits Division

Standard performance testing requirements, 1462P

Standard performance testing requirements sources not subjected to promulgated federalor state performance testing regulations, 1850P

Secretary, Office of

Federal air quality regulations, incorporation by reference, 2011, 463N, 1229R

Nonattainment new source review, 200N, 1231R

Offset requirements, 1172ER

Offset requirements and emission reduction credits banking, 1891ER, 2081N

Permit review, 1586R, 1954R

$PM_{2.5}$ increments, significant impact levels and significant monitoring concentration, 857N

Regulatory permit for rock, concrete, and asphalt crushing facilities, 1955R

State implementation plan (SIP)

GHG tailoring, 678P

Miscellaneous, 678P

Permit, 2008-2010, 678P

VOC, 678P

Legal Affairs Division

Addition to list of exempted compounds, 2084N

Comprehensive toxic air pollutant emission control program, 1762N

Discharges of produced water to the territorial seas, 265P

Emission comparable fuel exclusion withdrawal, 790R

EPA notice, 1765N

Exemptions from licensing, general licenses and distribution of byproduct material: licensing and reporting requirements, 1767N

Hazardous waste technical corrections and clarifications, 774R

Incorporation by reference update, 2085N

Medical use of byproduct material—authorized user clarification, 2088N

Minor revisions to water quality standards antidegradation language, 1768N

Notice of public hearing substantive changes to proposed rule OS083 stay of permit conditions pending administrative/judicial review, 1581P

Occupational dose records, labeling containers and the total effective dose equivalent, 1770N

OECD requirements, spent lead-acid battery exports, 781R, 1009R

Office of environmental assessment references, 1771N

Offset requirements, 7ER

Recyclable material removal from non-processing transfer station, 46R

Stay of permit conditions pending administrative/ judicial review, 202N

Toxic emissions reporting requirements, 2086N

Waste expedited permitting process, 204N, 1232R

EXECUTIVE ORDERS

BJ 11-25 Executive Branch—Expenditure Reduction, 1EO

BJ 11-26 Qualified Energy Conservation Bond Allocation Louisiana Department of Public Safety and Corrections—Corrections Services, 2EO

BJ 11-27 Executive Branch—DOTD Guidelines for Vehicles, Trucks and Loads which Haul Hay from Louisiana to Texas, 3EO

BJ 12-01 Carry-Forward Bond Allocation 2011, 270EO

BJ 12-02 Rules and Policies on Leave for Unclassified Service—Amended Retroactive to January 14, 2008, 916EO

BJ 12-03 Executive Branch—Expenditure Freeze, 921 EO

BJ 12-04 Offender Labor, 923EO

BJ 12-05 Coordinated Retirement Plan Spronsor—IRS Submission, 1474EO

BJ 12-06 Executive Branch—Limited Hiring Freeze, 1880 EO

BJ 12-07 DOTD Guidelines for Vehicles, Trucks and Loads Which Haul Hay from Louisiana to Texas, 1881 EO

FIREFIGHTERS PENSION AND RELIEF FUND

Firefighters Pension and Relief Fund, Board of Trustees

Direct rollovers, 205N, 1011R

Qualified domestic relations orders, 796R

Tax qualification provisions, 207N, 1012R

GOVERNOR

Administration, Division of

Information Technology, Office of

OIT bulletin, 265P, 2291P

Patient's Compensation Fund Oversight Board

Patient's compensation fund, 1789N

Property Assistance Agency

Luxury vehicles, 1081N, 1588R

Racing Commission

Daily doubles, 925ER, 1172ER, 1407R

Field less than five, 1440N

Mandatory health screening, 926ER, 1174ER, 1407R

Nonsteroidal and/or anti-inflammatory medication, 1408R

Owner's entry of more than one horse, 2092N

Pick five, 928ER, 1175ER, 1408R

Superfecta, 1440N

Super six, 926ER, 1176ER

Training tracks, 1018R

GOVERNOR (continued)
State Purchasing, Office of
Reverse auctions, 859N, 1406R
State Travel, Office of
General Travel—PPM 49, 1475PPM
State Uniform Payroll, Office of
Payroll deduction, 47ER, 797R
Tax Commission
Ad valorem taxation, 799R
Architectural Examiners, Board of
Administration, place of seal or stamp, 208N, 1587R
Continuing education, 1012R
Internet advertising, 208N
Board of River Port Pilot Commissioners for the Port of New Orleans
River port pilots, 1438N
Steamship pilots for the Mississippi river, 2089N
Certified Shorthand Reporters, Board of Examiners
Transcript certification, 1074N, 1957R
Financial Institutions, Office of
Dishonest or unethical practices, 2093N
Judicial interest rate determination for 2012, 265P
Governor's Report
Governor's letter rejecting alternative fuel tax emergency rule, 1848GR
Home Inspectors, Board of
Education, standards of practice, rehearing procedure, 1075N
Public hearing—substantive changes to proposed rule—continuing educaion hours; instructors, 1852P
Homeland Security and Emergency Preparedness
Homeland security and emergency preparedness, 48R
Intrastate mutual aid compact, 1019R
Law Enforcement and Administration of Criminal Justice, Commission on
Federal funds distribution formula, 679P, 1080N, 1588R
Licensing Board for Contractors
Contractors, 148R
Home improvement registration and new home warranty act, 813R
Motor Vehicle Commission
Recreational product manufacturer shows or events, 1344ER, 1441N
Oil Spill Coordinator's Office
Deepwater horizon oil spill, 1332P
Public Defender Board
Service restriction protocol, 813R
Real Estate Commission
Internet advertising, 1021R\
Tax Appeals, Board of
Procedure and practice before the board, 1787N

HEALTH AND HOSPITALS
Addictive Disorder Regulatory Authority
Addictive disorder regulatory authority, 209N
Disciplinary procedures, 1022R
Fees, 1025R
Aging and Adult Services, Office of
All inclusive care for the elderly, reimbursement rate reduction, 1493ER
CommunityCARE program termination, 1181ER
Community first choice option services, 1444N
Home and community-based services waivers
Adult day health care, reimbursement rate reduction, 1501ER, 1594R
Community choices waiver, 311ER, 1186ER, 1503ER
Standards for participation repeal, 314ER, 1368ER
Long term
Reimbursement rate reduction, 1527ER
Personal care services, long-term, policy clarifications and service limit reduction, 325ER, 329ER, 1195ER
Behavioral Health, Office of
Physical space requirements exemption
Standards for community mental health, 733ER, 1533ER
Substance abuse/addictive disorders facilities minimum licensing standards, 732ER, 1534ER
Citizens with Developmental Disabilities, Office of
Home and community-based services waivers
Children's choice
Allocation of waiver opportunities, 933ER, 1900ER
Money follows the person rebalancing demonstration extension, 12ER, 1189ER
New opportunities waiver, reimbursement rate reduction, 1504ER
Service cap reduction, 1502ER
Residential options waiver, 934ER, 1505ER, 1900ER
Support coordination standards for participation, 1506ER, 1917ER
Supports waiver, reimbursement rate reduction, 1515ER
Dentistry, Board of
Anesthesia/Analgesia administration and continuing education requirements, 1300N, 1958R
Automated external defibrillator, 1805N
Continuing education requirements, 817R
Dentistry requirements, 355R
Examination of dentists, 1302N, 1959R
General provisions—evidence of graduation, restricted licensees, temporary licenses, and returning to active practice, 1806N
Patients' records, 1303N, 1960R
Embalmers and Funeral Directors, Board of
Embalmers and funeral directors, 466N
Public hearing, substantive changes to proposed rules; embalmers and funeral directors, 1140P
Emergency Response Network Board
LERN destination protocol: TRAUMA, 1333P, 1462P
Health Services Financing, Bureau of
Adult behavioral health services, 358R
Adult day health care
Minimum licensing standards, 695ER, 1490ER
Licensing standards, 1451N

HEALTH AND HOSPITALS (continued)

Adult dentures program, reimbursement rate reduction, 1493ER
All inclusive care for the elderly, reimbursement rate reduction, 1493ER
Ambulatory surgical centers, reimbursement methodology, never events, 1181ER, 1304N, 1961R
Ambulatory surgical centers, reimbursement rate reduction, 1494ER
Behavioral health services, 360R
Behavioral health services, statewide management organization adults capitated payment reduction, 1495ER
Children's behavioral health services, 363R
  Reimbursement rate reduction, 1495ER
CommunityCARE program
  Redesign, 697ER
  Termination, 1181ER, 1442N
Community first choice option services, 1444N
Coordinated care network, 1893ER
Direct service worker registry, 701ER, 1496ER
Disproportionate share hospital payments, 9ER, 1183ER
  Distinct part psychiatric units, payment methodology, 310ER, 1185ER, 1895ER
  Low income and needy care collaboration, 929ER, 1896ER
  Small rural hospitals, qualifying criteria, 1898ER
Early and periodic screening, diagnosis and treatment dental program—reimbursement rate reduction, 1498ER
Psychological and behavioral services and school based mental health services, 365R
School-based health centers, 931ER
School-based nursing services, 704ER, 1344ER
Substance abuse services, 706ER, 1347ER, 1449N
End stage renal disease facilities, reimbursement rate reduction, 1499ER
Facility need review
  Hospice providers, 707ER, 1087N, 1349ER, 1593R
  Outpatient abortion facilities, 1305N, 1961R
Family planning clinics, reimbursement rate reduction, 1500ER
Family planning waiver, reimbursement rate reduction, 1501ER
Federally qualified health centers
  Fluoride varnish applications, 11ER, 932ER, 1899ER
Greater New Orleans community health connection waiver, 820R
Home and community-based behavioral health services waiver, 366R
Home and community-based services providers
  Minimum licensing standards, 63R
  Minimum licensing standards, direct service worker exemption, 861N, 1410R
Home and community-based services waivers
  Adult day health care, reimbursement rate reduction, 1501ER, 1594R
  Children's choice
    Allocation of waiver opportunities, 933ER, 1900ER
    Money follows the person rebalancing demonstration extension, 12ER, 1189ER
    Service cap reduction, 1502ER
  Community choices waiver, 311ER, 1186ER, 1503ER
  Cost reporting requirements, 1504ER
  New opportunities waiver, reimbursement rate reduction, 1504ER, 1901ER
  Repeal of standards for participation, 314ER, 1368ER
    Residential options waiver, 934ER, 1505ER, 1900ER
  Standards for participation, 2100N
  Support coordination standards for participation, 708ER, 1506ER, 1917ER
  Supports waiver, reimbursement rate reduction, 1515ER
Home health program, durable medical equipment reimbursement rate reduction, 1515ER
  Nursing and home health aide services reimbursement rate reduction, 1516ER
Home health services, cost reporting requirements, 1517ER
Hospice services, 717ER, 1350ER
Hospital licensing standards
  License renewal and dietary services, 862N, 1413R
Inpatient hospital services
  Distinct part psychiatric units, reimbursement methodology, 315ER, 1190ER, 1925ER
  Free-standing psychiatric hospitals, low income and needy care collaboration, 949ER, 1926ER
  Healthcare-acquired and provider preventable conditions, 1191ER, 1307N, 1962R
  Neonatal and pediatric intensive care units and outlier payment methodologies, 1927ER
  Non-rural, non-state hospitals
    Low income and needy care collaboration, 1930ER
    Reimbursement rate reduction, 1931ER
  Non-rural, non-state public hospitals
    Reimbursement methodology, 1931ER
    Supplemental payments, 1932ER, 2101N
  Pre-admission certification, 13ER, 824R
  Reimbursement methodology, medical education payments, 321ER, 720ER, 1359ER, 2103N
  Small rural hospitals
    Low income and needy care collaboration, 13ER, 1192ER
    Upper payment limit, 468N, 722ER, 1240R
  State hospitals
    Reimbursement rate reduction, 1933ER
    Supplemental payments, 469N, 951ER, 1241R
Intermediate care facilities for persons with developmental disabilities
  Minimum licensing standards, 864N
  Non-state facilities, reimbursement methodology, 722ER, 1517ER

HEALTH AND HOSPITALS (continued)
Public facilities reimbursement methodology, 14ER, 1193ER, 1934ER
Reimbursement rate reduction, 1518ER
Laboratory and radiology services, reimbursement rate reduction, 1519ER
LaCHIP affordable plan
Dental program, reimbursement rate reduction, 1520ER
Major teaching hospitals
Qualifying criteria, 316ER, 1354ER
Supplemental payments, 318ER, 1356ER
Medical transportation program
Emergency ambulance services, reimbursement rate reduction, 723ER, 1360ER, 1521ER, 1936ER
Non-Emergency medical transportation public transit services, 726ER, 1522ER
Neonatal and pediatric intensive care units and outlier payment methodologies, 319ER, 1357ER
Non-rural, non-state hospitals
Low income and needy care collaboration, 950ER
Reimbursement methodology, 951ER
Nursing facilities
Minimum licensing standards
Civil monetary penalty waivers, 824R
Nurse aide training and competency evaluation program, 1241R, 1410R
Per diem rate reduction, 470N, 1241R
Reimbursement methodology
Low income and needy care collaboration, 323ER, 1363ER
Reimbursement rate reduction, 1522ER, 1936ER
Reimbursement rate reduction pre-rebase rate cut, 1523ER, 1937ER, 1938ER
Minimum data set assessments, 16ER, 825R
Private room conversions, 324ER, 1364ER
Outpatient hospital services
Diabetes self-management training, 19ER, 1194ER
Never events, 1202ER, 1308N, 1963R
Small rural hospitals
Low income and needy care collaboration, 727ER, 1524ER
Upper payment limit, 472N, 729ER, 1251R
Non-rural, non-state hospitals and children's specialty hospitals, reimbursement rate reduction, 1939ER
State-owned hospitals, medical education payments, 324ER, 730ER, 1364ER, 2104N
Reimbursement rate reduction, 1940ER
Pediatric day health care program, reimbursement rate reduction, 1526ER
Personal care services, long-term
Cost reporting requirements, 1527ER
Policy clarifications and service limit reduction, 20ER, 325ER, 329ER, 1195ER
Reimbursement rate reduction, 1527ER
Pharmacy benefits management program
Maximum allowable costs, 24ER, 1199ER
Medication administration, influenza vaccinations, 952ER, 1941ER
Prescription time limits, 368R
Pregnant women extended services
Dental services, reimbursement rate reduction, 1529ER
Substance abuse screening and intervention services, 731ER, 1528ER
Professional services program
Anesthesia Services, reimbursement rate reduction, 1529ER, 1942ER
Diabetes self-management training, 25ER, 1201ER
Family Planning Services, reimbursement rate reduction, 1530ER
Fluoride varnish applications, 26ER, 953ER, 1943ER
Physician services, reimbursement rate reduction, 1531ER
Reimbursement methodology
Never events, 1202ER, 1309N, 1964R
Supplemental payments, 333ER, 1366ER
Supplemental payments for Tulane, professional practitioners, 1532ER
Prosthetics and orthotics, reimbursement rate reduction, 1533ER
Psychiatric residential treatment facilities, 369R
Minimum licensing standards, 371R, 1944ER
Public facilities, reimbursement methodology, 14ER
Professional services program supplemental payments for Tulane professional practitioners, 224N
Rural health clinics
Fluoride varnish applications, 27ER, 954ER, 1945ER
School based behavioral health services, 400R
Standards for community mental health, physical space requirements exemption, 733ER, 1533ER
Substance abuse/addictive disorders facilities
Minimum licensing standards, physical space requirements exemption, 732ER
Substance abuse and addiction treatment facilities, licensing standards, 473N
Substance abuse services, 426R, 1535ER
Surveillance and utilization review subsystem, 1535ER, 2106N
Targeted case management, reimbursement rate reduction, 1549ER
Therapeutic group homes, 427R
Minimum licensing standards, 401R
Uncompensated care payments, 1550ER
Hearing Aid Dealers, Board for
Offices of the board, ethics and licenses, 1589R
Licensed Professional Counselors, Board of Examiners
Marriage and family licensure requirements, 1310N
Mental health counseling, 335ER, 1367ER
Requirements for licensure, 1965R
Medical Examiners, Board of
Clinical laboratory personnel, licensure and certification, 210N, 1026R
Licensure and certification; definitions; qualifications for license, 1808N
Physician assistants, practice, 1233R
Respiratory therapists, licensure, certification and practice, 52R

HEALTH AND HOSPITALS (continued)
Nursing, Board of
Denial or delay of licensure, 818R
Procedure for establishing a new program, 1489ER, 1809N
Nursing Facility Administrators, Board of Examiners
Administrator-in-training (AIT) waiver, 51R
Optometry Examiners, Board of
Licensing; dispensation of medication, 1082N, 1590R
Pharmacy, Board of
Cognitive services, 212N, 1233R
Controlled dangerous substance license for non-resident distributors, 1810N
Controlled dangerous substances in emergency drug kits, 1811N
Durable medical equipment permit, 1177ER
E-communications, 213N, 1234R
Hospital pharmacy, 213N, 1235R
Institutional pharmacies, 1814N
Interstate remote processing, 1813N
Medical orders remote processing, 220N, 1240R
Penal pharmacy, 215N, 1235R
Pharmacist-in-charge, 216N, 1239R
Prescription monitoring program, 1815N
Security of prescription department, 1817N
Psychologists, Board of Examiners
Continuing education, 2096N
Public Health, Office of
Disease reporting requirements, 2121N
Immunization requirements, 896N, 1252
Emergency Medical Services
Automated external defibrillators, 2124N
Maternal and Child Health Section
MCH block grant, 1464P
Nutrition Services Program
Special supplemental nutrition program for women, infants and children (WIC), 2291N
Sanitary Code
Marine and fresh water animal food products, 95R, 2127N
Plumbing, 2129N
Shellstock, interstate commerce, 1369ER
Tuberculosis Control Program
Required medical examinations, 2265N
Radiologic Technology, Board of Examiners
Fusion technology, 97R
Veterinary Medicine, Board of
Alternative therapy and collaborative treatment, preceptorship program, and certified animal euthanasia technician, 356R
Fall/Winter examination dates, 1853P
Licensure procedures, continuing veterinary education, fees, 1083N, 1591R
Wholesale Drug Distributors, Board of
Fees, 1086N, 1960R
Policy and procedures and quarantine of legend drugs or legend devices, 2099N

INSURANCE
Commissioner, Office of
Regulation Number 100—Coverage of Prescription Drugs through a Drug Formulary, 225N, 1027R
Health, Office of
Annual HIPAA assessment rate, 1464P

LEGISLATION
Concurrent Resolutions
Senate
No. 107, sexual harassment training, 1459L
House
No. 6, exemption inclusion of the Zoo of Acadiana, 1459L
No. 16, acquisition of property for the Comite Diversion Canal Project, 1460L
No. 69, limitations on examinations of applicant for certification as an athletic trainer, 1460L, 1849L
Senate Committee on Commerce
Report of Senate Committee Emergency Rule Oversight Hearing on LAC 35:I:1505, 677CR

LOUISIANA ECONOMIC DEVELOPMENT CORPORATION
Louisiana Seed Capital Program (LSCP) and Seed Capital Program for the State Small Business Credit Initiative (SSBCI), 734R, 986R
Small Business Loan and Guaranty Program (SBL and GP) and State Small Business Credit Initiative (SSBCI) Program, 740R, 992R

NATURAL RESOURCES
Conservation, Office of
Advanced notice of proposed rulemaking and solicitation of comments, 1853N
Amendment to statewide orders no. 29-B and 29-B-a, 336ER
Definitions, 1414R
Fees, 2267N
Hazardous liquids pipeline safety, 99R
Hearing, docket no. ENV 2012-04, 1334P
Legal notice, docket no. ENV 2012-05, 1868P
Legal notice, docket no. ENV 2012-L01, 679P
Legal notice, docket no. ENV 2012-L-002
Natural gas pipeline safety, 110R, 828R
Notification and confirmation of new water well construction, 1818N
Orphaned oilfield sites, 679P, 1335P, 1465P, 1869P, 2291P

NATURAL RESOURCES (continued)

Statewide orders no. 29-B and 29-B-a
Operational and safety requirements for wells drilled in search or for the production of oil or natural gas at water location, 1370ER

Environmental Division
Advanced notice of rulemaking and solicitation of comments on water well notification and construction, 1140P
Legal notice—docket no. ENV 2012-07, 2291P

Mineral Resources, Office of
Mineral resources, alternative energy leasing and dry hole credit, 125R

Secretary, Office of the
Fishermen's Gear Compensation Fund
Reported underwater obstructions, latitude/longitude coordinates, 266P, 680P, 910P, 1141P, 1336P, 1464P, 1869P,

PUBLIC SAFETY AND CORRECTIONS

Corrections Services
Judicial agency referral residential facilities, 2269N
Louisiana risk review panel, 2271N
Louisiana sex offender assessment panels, 429R
Offender incentive pay and other wage compensation, 511N, 1252R
Offender mail and publications, 830R
Offender visitation, 835R
Performance grid and administrative sanctions, 955ER, 1090N, 1597
Sex offender payment for electronic monitoring, 432R
Sex offender treatment plans and programs, 1092N, 1599R

Gaming Control Board
Electronic submission of documents, 2271N
Gaming, regulation consolidation, 513N, 1601
Record preparation fees, 2274N

Liquefied Petroleum Gas Commission
Liquefied petroleum gas, 228N, 1254R

Motor Vehicles, Office of
Driver's license, 1094N, 1974R

Private Investigator Examiners, Board of
Continuing education, 898N, 1088N, 1596R

State Police, Office of
Issuance of concealed handgun permits, 642N, 1279R, 1415R
Motor vehicle inspections, 1819N
Operator qualifications, 2275N
Public hearing—towing, recovery and storage, 266P
Towing, recovery and storage, 1832N

Applied Technology Unit
Breath and blood alcohol analysis, 1113N, 1992R

Transportation and environmental safety section
Motor carrier safety revision date and weight, 899N, 1417R

State Uniform Construction Code Council
Building code enforcement officer, 957ER
Provisional certificate of registration deadline, 28ER
Seismic design and electrical code, 1115N, 1994R
Structural design for earthquake loads, 957ER

REVENUE

Alcohol and Tobacco Control, Office of
Good standing, 144R
Participation in hearing by video conference, 648N, 1285R
Regulation III, prohibitive acts, vending machines, 2276N
Regulation VII, procedures determined for issuing permits, 2277N
Regulation IX, prohibition of certain unfair business practices, 650N, 1286R, 2278N
Tobacco permits, 145R, 2280N

Policy Services Division
Alternative fuel credit, 1203ER
Certain self-propelled vehicles removed from inventory, 1320N, 1995R
Corporation income and franchise tax filing extensions, 958ER
Electronic funds transfer, 347ER, 1321N
Income tax credits for wind or solar energy systems, 2282N
Individual income tax filing extensions, 959ER
Natural gas severance tax rate, effective July 1, 2012, 1336P
Payment of sales and use taxes by persons constructing, altering, or repairing immovable property, 1116N, 1995R
Withholding tax statements and returns electronic filing requirements, 347ER, 1322N

TRANSPORTATION AND DEVELOPMENT

Aviation, Office of
Aviation program needs and project priority process, 1118N

Professional Engineering and Land Surveying Board
Definitions, 835R, 1029R
Examinations and experience, 1835N
Supervising professionals and use of seals, 900N, 1418R

TREASURY

Louisiana Housing Corporation
Turnkey mortgage origination program, 1996R

Louisiana State Employees' Retirement System, Board of Trustees
Internal revenue code provisions, 902N, 1324N
Procedures for processing disability applications, 836R

Registrars of Voters Employees' Retirement System
Retirement system trustees election procedures, 1029R

Treasurer, Office of
Permissible investments, 146R

VETERANS AFFAIRS

Veterans Affairs Commission
Veterans affairs, 253N, 1015R

WILDLIFE AND FISHERIES

Wildlife and Fisheries Commission

2011 fall inshore shrimp season closure, 28ER, 248ER
2012 fall shrimp season opening, 1946ER
2012 gag grouper bag season, 959ER
2012 greater amberjack season closure, 960ER
2012 large coastal shark commercial season closure, 1551ER
2012 oyster season on public oyster seed grounds, 1947ER
2012 red snapper recreational fishery extension, 1552ER
2012-2013 commercial king mackerel season, 29ER
2012-2013 recreational reef fish seasons, 29ER
2012-2013 reef fish commercial seasons, 30ER
2012-2013 waterfowl season dates, 1947ER
Additional spring inshore shrimp season closure,1948ER
Calcasieu ship channel to the Louisiana/Texas state line, 1552ER
Mississippi/Louisiana state line to Bayou Lafourche and freshwater bayou canal to the Calcasieu ship channel, 1553ER
Calcasieu lake oyster harvester permit, 1838N
Crappie regulations—daily take, 1840N
Early season migratory bird hunting regulations, 1553ER
Emergency oyster season closure
Sister Lake and Bay Junop public oyster seed reservations, 30ER
False river, trammel and gill nets, 655N, 1732R
Feral hog trapping, 1131N, 1997R
Fisheries closure due to oil spill, 1949ER
Gag grouper recreational season closure, 31ER
General and wildlife management area hunting rules and regulations, 656N, 1732R
General and WMA turkey hunting, 1840N
Gray triggerfish commercial season closure, 1554ER, 1555ER
Internet purchase of commercial licenses and permits, 2286N
Large coastal and small coastal shark commercial season opening, 349ER
Oyster season closure, primary public oyster seed grounds east of the Mississippi river, 349ER
Partial opening of shrimp season in state outside waters, 1205ER
Recreational and commercial fisheries closure, 31ER, 1205ER
Reef fish, 1132N, 1454N, 1455N
Removal of abandoned crab traps, 146R
Resident game hunting season, 671N, 1747R
Spring inshore shrimp season
Closure in portions of state inside waters, 1555ER
Opening dates, 1206ER
Tuna harvest regulations, 1419R
Turkey hunting areas, season, and bag limits, 1843N
Triploid grass carp, 433R
Vessel monitoring systems; oyster seed ground vessel permit, 674N, 1997R
Wild seafood certification program, 651N, 1999R
Yo-Yo and trotline regulations, 1845N

WORKFORCE COMMISSION

Workers' Compensation Administration, Office of

Average weekly wage rate, 2292N
Community rehabilitation program, 147R
Form LWC-WC-1009, 2288N
Pharmaceutical billing, 836R
Public hearing for substantial changes to proposed rules, 680P
Utilization review procedures, 256N, 266P, 1030R, 1286R
Weekly compensation benefits limits, 2292N